AIR CONDITIONING CONTROL ASSEMBLY (Auto A/C)

AC2GH-01

COMPONENTS

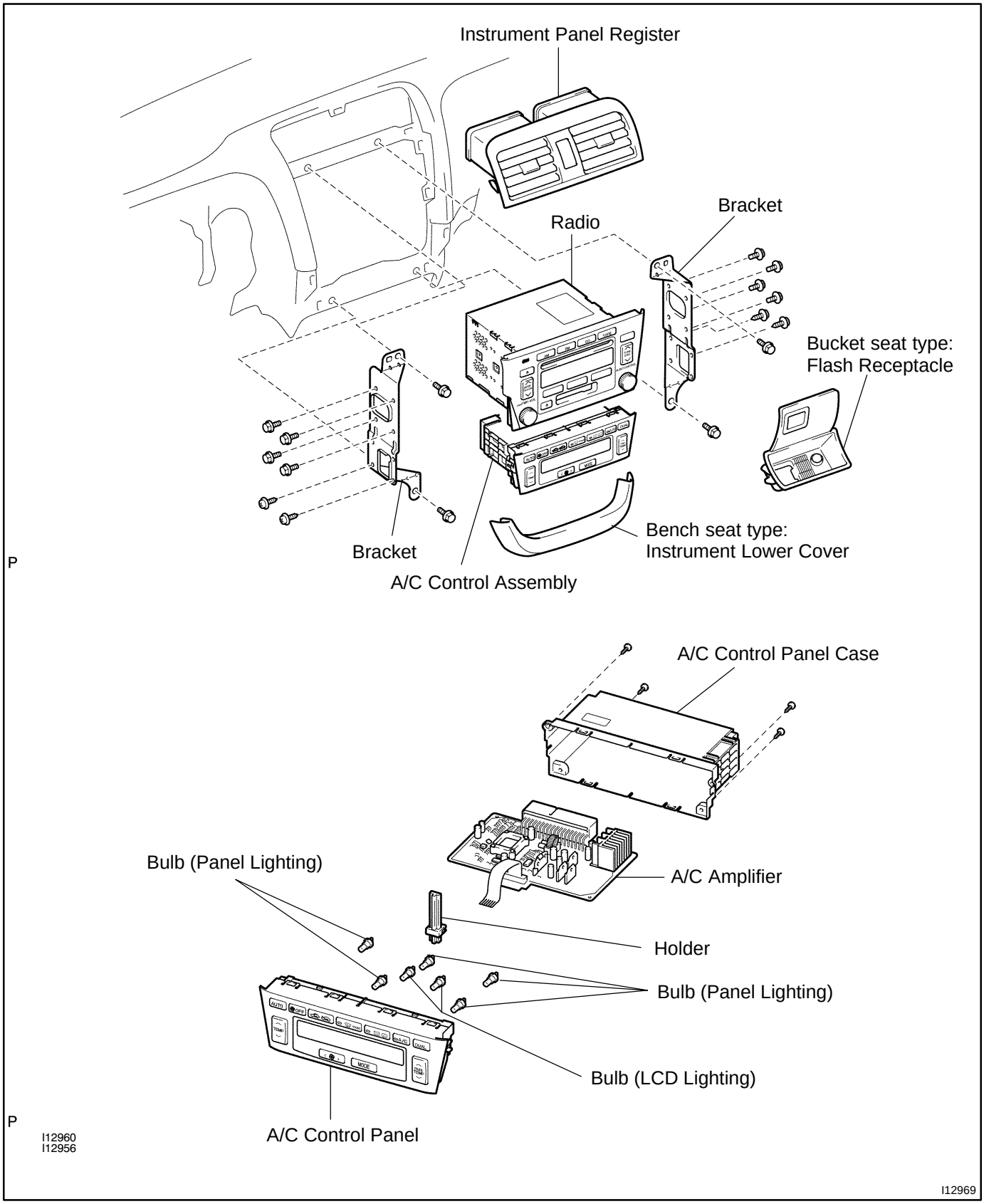

AC2GI-01

DISASSEMBLY

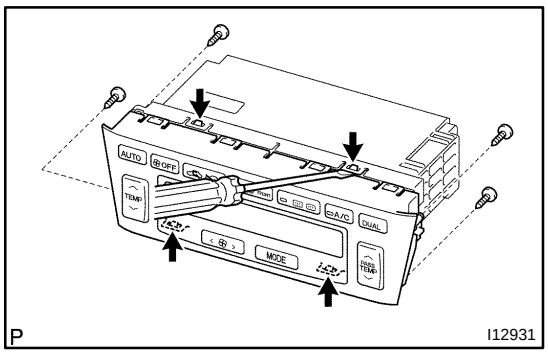

P I12931

1. REMOVE A/C CONTROL PANEL

(a) Remove the 4 screws.

(b) Using a screwdriver, release the 4 claws.

HINT:

Tape the screwdriver tip before use.

(c) Unlock the connector's lock and pull out the flat harness from the A/C control panel.

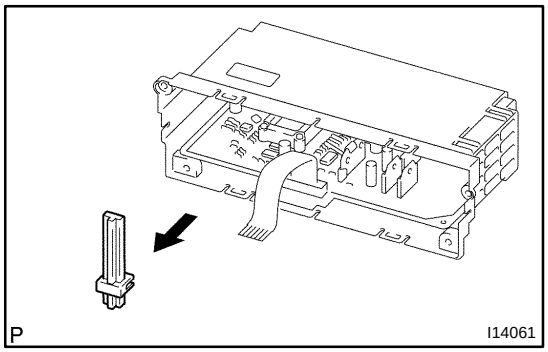

P I14061

2. REMOVE A/C AMPLIFIER

(a) Release the 2 claws and remove the holder.

(b) Hold the connector of amplifier and pull out the amplifier.

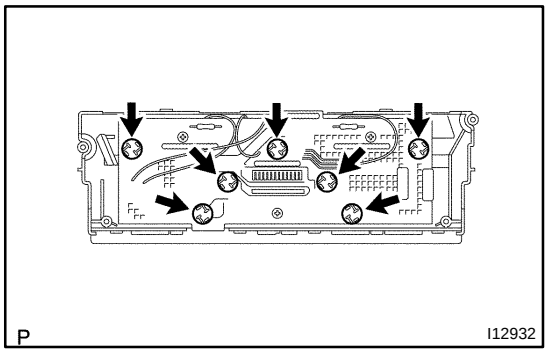

P I12932

3. REMOVE BULB

Using a screwdriver, turn the bulb to the left and pull out the bulb.

AC2GJ-01

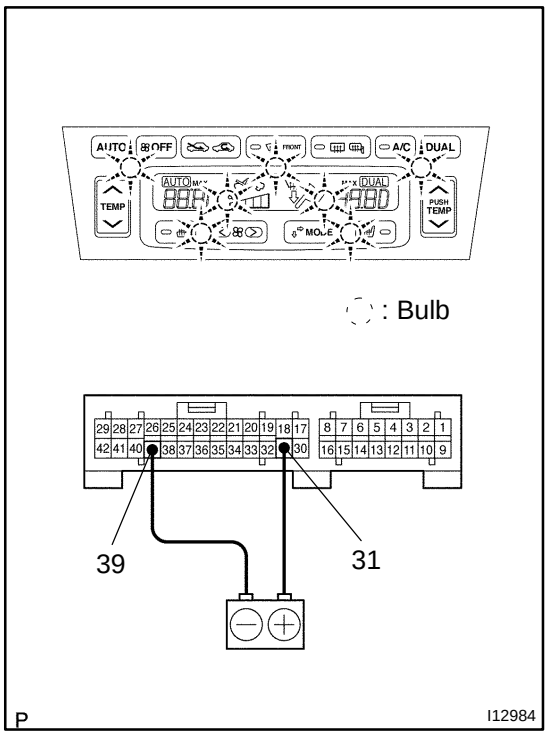

INSPECTION

1. INSPECT ILLUMINATION OPERATION

Connect the positive (+) lead from the battery to terminal 31 and the negative (-) lead to terminal 39, then check that the illumination lights up.

If there is bulb not light up, replace the bulb only. If all bulbs do not light up, replace the A/C control panel.

2. INSPECT A/C CONTROL AMPLIFIER CIRCUIT

(See page DI-759)

AC2GK-01

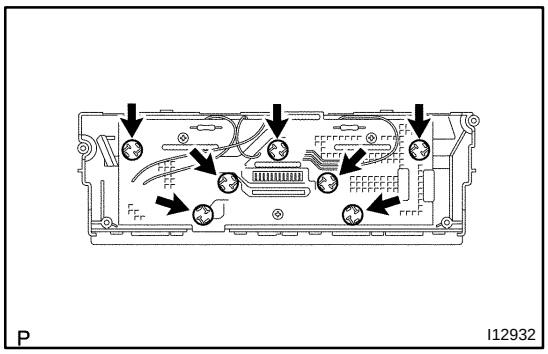

REASSEMBLY

1. INSTALL BULB

(a) Install the bulb to the A/C control panel.

(b) Using a screwdriver, turn the bulb to the right and lock the bulb.

2. INSTALL A/C AMPLIFIER

(a) Hold the connector of supply parts amplifier and pull out the amplifier from electrostatic prevention bag.

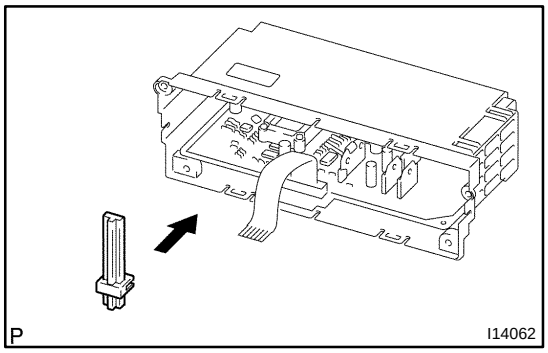

(b) Hold the connector of amplifier and install the amplifier to the A/C control panel case.

(c) Install the holder.

(d) Check the fitting for connector of amplifier.

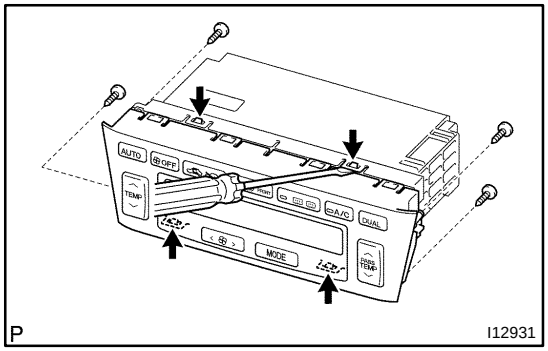

3. INSTALL A/C CONTROL PANEL

(a) Unlock the connector's lock and push into the flat cable.

(b) INstall the A/C control panel.

(c) Check the fitting for 4 claws.

(d) INstall the 4 screws.

AC10F-02

INSTALLATION

Installation is in the reverse order of removal (See page AC-78).

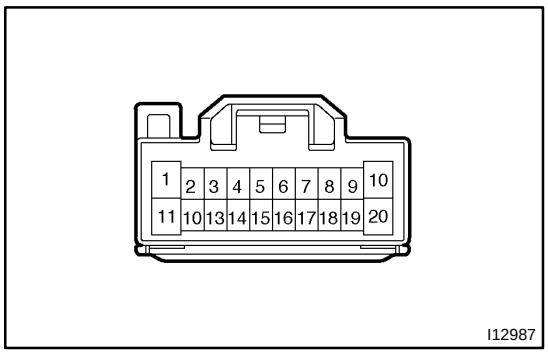

AIR CONDITIONING AMPLIFIER (Manual A/C)

AC2GL-01

ON-VEHICLE INSPECTION

INSPECT A/C AMPLIFIER CIRCUIT

(a) Remove the multi display with connectors still connected.

(b) Inspect wire harness side connector from the back side, as shown in the chart below.

Test conditions:

- Running engine at idle speed
- A/C switch ON
- Temperature control dial "MAX COOL" position
- Blower speed control switch at "HI" position
- Set on manifold gauge set

Tester connection	Condition	Specified condition
1 - Ground	Refrigerant pressure at 196 - 3,140 kPa	Below 1.0 V
	Refrigerant pressure less than 196 kPa or more than 3,140 kPa	Battery positive voltage
2 - Ground	Constant	Pulse generation
5 - Ground	A/C switch ON	Battery positive voltage
7 - Ground	Evaporator temperature at 25 °C (77 °F)	Approx. 1.5 kΩ
8 - Ground	A/C switch ON	Battery positive voltage
	A/C switch OFF	Below 1.0 V
9 - Ground	A/C switch ON	Below 2.0 V
	A/C switch OFF	No voltage
10 - Ground	Constant	Battery positive voltage
	Engine speed at idle-up speed	Below 1.0 V
11 - Ground	A/C switch OFF	Battery positive voltage
	A/C switch ON	Below 0.7 V
11 - Ground	Magnetic clutch is engaged	Below 1.0 V
	Magnetic clutch is not engaged	Battery positive voltage

If the circuit is not as specified, inspect the circuits connected to other parts.

AC2GM-01

REMOVAL

REMOVE MULTI DISPLAY (Built into the A/C amplifier) (See page BO-90)

AC20C-02

CHARGING

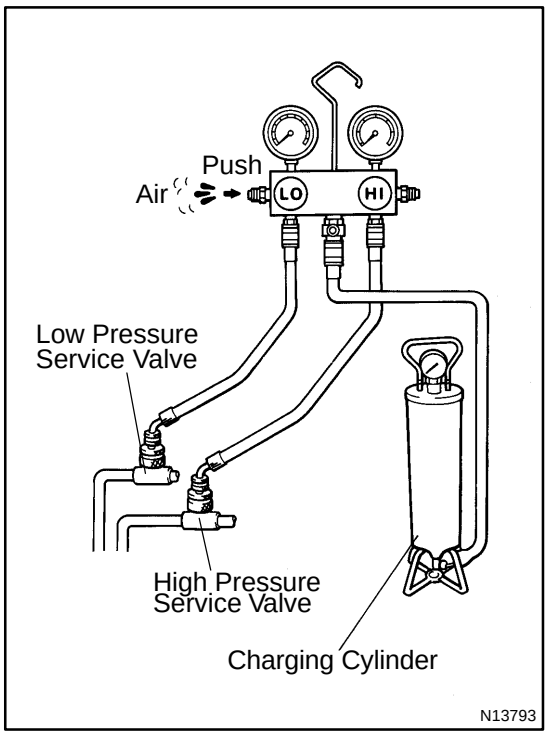

1. INSTALL CHARGING CYLINDER

HINT:

When handling the charging cylinder, always follow the directions given in the instruction manual.

(a) Charge the proper amount of refrigerant into the charging cylinder.

(b) Connect the center hose to the charging cylinder.

CAUTION:

Do not open both high and low hand valves of manifold gauge set.

(c) Open the valve of charging cylinder.

(d) Press the valve core on the side of manifold gauge and expel the air inside of the center hose.

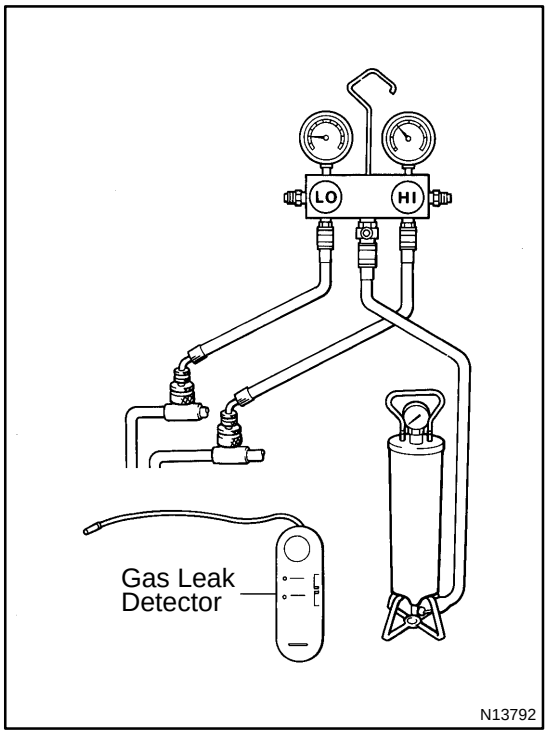

2. INSPECT REFRIGERATION SYSTEM FOR LEAKS

(a) Open the high pressure hand valve and charge refrigerant.

(b) When the low pressure gauge indicates 98 kPa (1 kgf/cm^2, 14 psi) close the high pressure hand valve.

(c) Using a gas leak detector, check the system for leakage.

If leak is found, repair the faulty component or connection.

CAUTION:

Use the refrigerant recovery/ recycling machine to recover the refrigerant whenever replacing parts.

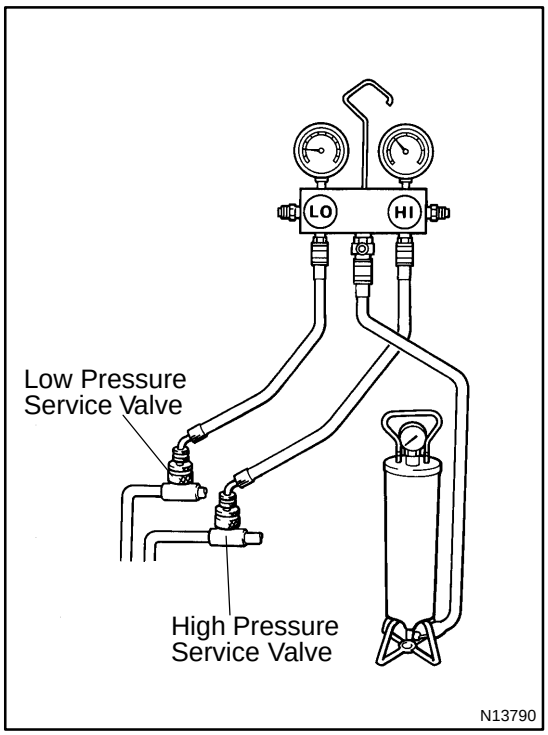

3. CHARGE REFRIGERANT INTO REFRIGERANT SYSTEM

If there is no leak after refrigerant leak check, charge the proper amount of refrigerant into refrigeration system.

CAUTION:

- **Never run the engine when charging the system through the high pressure side.**
- **Do not open the low pressure hand a valve when the system is being charged with liquid refrigerant.**

(a) Open the high pressure hand valve fully.

(b) Charge specified amount of refrigerant, then close the high pressure hand valve.

HINT:

A fully charged system is indicated by the sight glass being free of any bubbles.

(c) Charge partially refrigeration system with refrigerant.

(1) Set vehicle in these conditions:

- Running engine at 1,500 rpm
- Blower speed control set at ”HI”
- Temperature control set at ”MAX. COOL”
- Air inlet control set at ”RECIRC”
- Fully open doors (Sliding roof: closed)

(2) Open the low pressure hand valve.

CAUTION:

Do not open the high pressure hand valve.

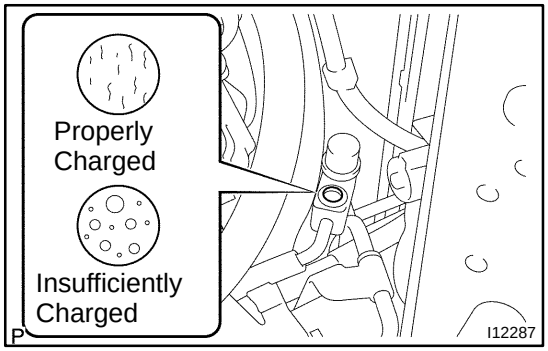

(d) Charge refrigerant until bubbles disappear and check the pressure on the gauge through the sight glass.

(e) Replenishment to be 100 ± 50 g after bubbles disapper.

AC0YC-02

EVACUATING

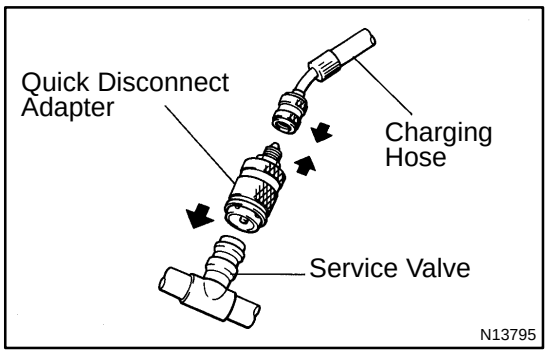

1. CONNECT QUICK DISCONNECT ADAPTER TO CHARGING HOSES

2. REMOVE CAPS FROM SERVICE VALVES ON REFRIGERANT LINES

3. SET ON MANIFOLD GAUGE SET

(a) Close both hand valves of manifold gauge set.

(b) Connect the quick disconnect adapters to the service valves.

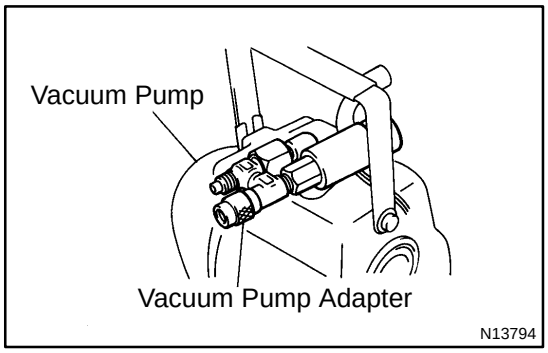

4. EVACUATE AIR FROM REFRIGERATION SYSTEM

(a) Connect the vacuum pump adapter to the vacuum pump.

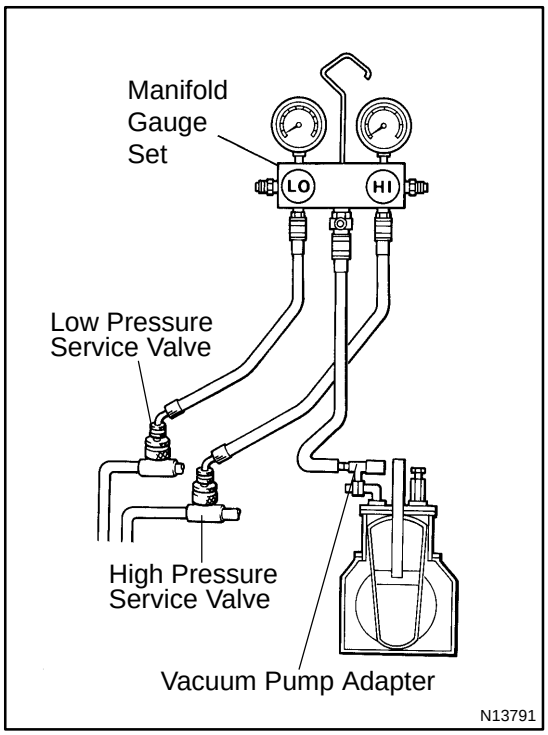

(b) Connect the center hose of the manifold gauge set to the vacuum pump adapter.

(c) Open both the high and low hand valves and run the vacuum pump.

(d) After 10 minutes or more, check that the low pressure gauge indicates 750 mmHg (30 in. Hg) or more.

HINT:

If the reading is 750 mmHg (30 in. Hg) or more, close both hand valves of manifold gauge set and stop the vacuum pump.

Check the system for leaks and repair if necessary.

(e) Close both the high and low hand valves and stop the vacuum pump.

(f) Leave the system in this condition for 5 minutes or more and check that there is no gauge indicator.

AC0YE-02

LOCATION

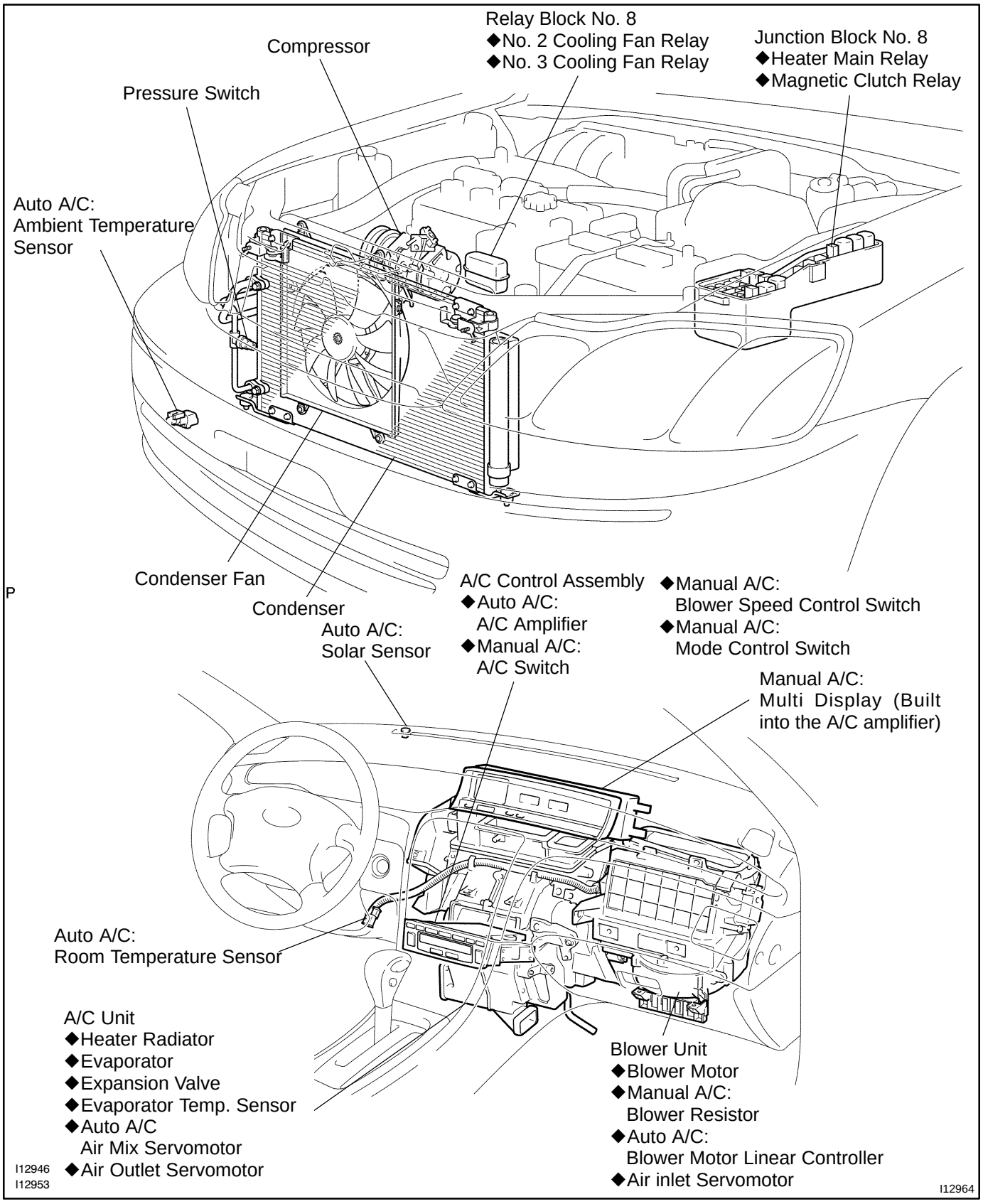

AC0YB-02

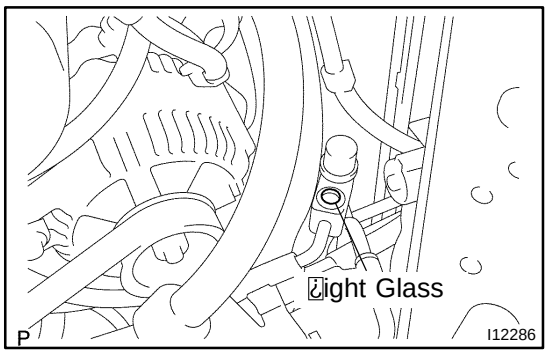

ON-VEHICLE INSPECTION

1. INSPECT REFRIGERANT VOLUME

Observe the sight glass on the liquid tube.

Test conditions:

Running engine at 1,500 rpm
Blower speed control switch at "HI" position
A/C switch ON
Temperature control dial at "COOL" position
Fully open the doors

Item	Symptom	Amount of refrigerant	Remedy
1	Bubbles present in sight glass	Insufficient*	(1) Check for gas leakage with gas leak detector and repair if necessary (2) Add refrigerant until bubbles disappear
2	No bubbles present in sight glass	None, sufficient or too much	Refer item 3 and 4
3	No temperature difference between compressor inlet and outlet	Empty or nearly empty	(1) Check for gas leakage with gas leak detector and repair if necessary (2) Add refrigerant until bubbles disappear
4	Temperature between compressor inlet and outlet is noticeably different	Correct or too much	Refer to items 5 and 6
5	Immediately after air conditioning is turned off, refrigerant in sight glass stays clear	Too much	(1) Discharge refrigerant (2) Evacuate air and charge proper amount of purified refrigerant
6	When air conditioning is turned off, refrigerant foams and then stays clear	Correct	-

*: Bubbles in the sight glass with ambient temperatures higher than usual can be considered normal if cooling is sufficient.

2. INSPECT REFRIGERANT PRESSURE WITH MANIFOLD GAUGE SET

This is a method in which the trouble is located by using a manifold gauge set. Read the manifold gauge pressure when the these conditions are established.

Test conditions:

Temperature at the air inlet with the switch set at RECIRC is 30 - 35 °C (86 - 95 °F)
Engine running at 1500 rpm
Blower speed control switch at "HI" position
Temperature control dial on "COOL" position

HINT:

It should be noted that the gauge indications may vary slightly due to ambient temperature conditions.

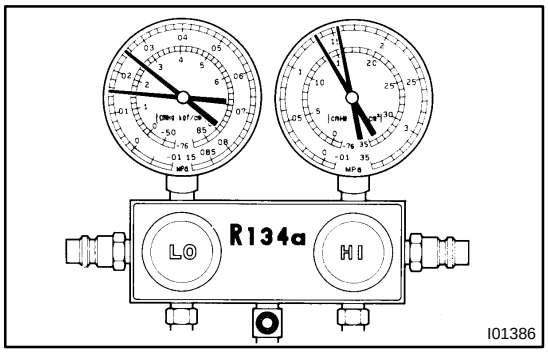

(1) Normally functioning refrigeration system.

Gauge reading:

Low pressure side:

0.15 - 0.25 MPa (1.5 - 2.5 kgf/cm^2)

High pressure side:

1.37 - 1.57 MPa (14 - 16 kgf/cm$^{2)}$

(2) Moisture present in refrigeration system.

Condition: Periodically cools and then fails to cool

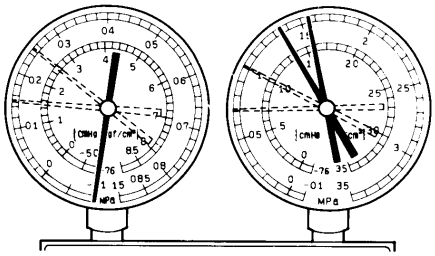

I01387

Symptom seen in refrigeration system	Probable cause	Diagnosis	Remedy
During operation, pressure on low pressure side sometimes become a vacuum and sometime normal	Moisture entered in refrigeration system freezes at expansion valve orifice and temporarily stops cycle, by normal state is restored after a time when the ice melts	Drier oversaturated state Moisture in refrigeration system freezes at expansion valve orifice and blocks circulation of refrigerant	(1) Replace condenser (2) Remove moisture in cycle through repeatedly evacuating air (3) Charge proper amount of new refrigerant

(3) Insufficient cooling

Condition: Insufficient cooling

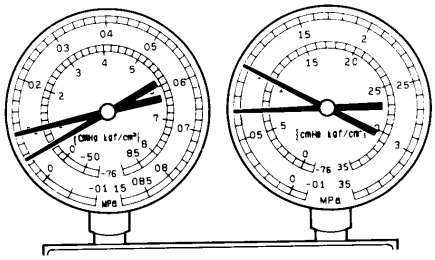

I01388

Symptom seen in refrigeration system	Probable cause	Diagnosis	Remedy
Pressure low on both low and high pressure sides Bubbles seen in sight glass continuously Insufficient cooling performance	Gas leakage at some place in refrigeration system	Insufficient refrigerant in system Refrigerant leaking	(1) Check for gas leakage with gas leak detector and repair if necessary (2) Charge proper amount of refrigerant (3) If indicated pressure value is near 0 when connected to gauge, create the vacuum after inspecting and repairing the location of the leak

(4) Poor circulation of refrigerant

Condition: Insufficient cooling

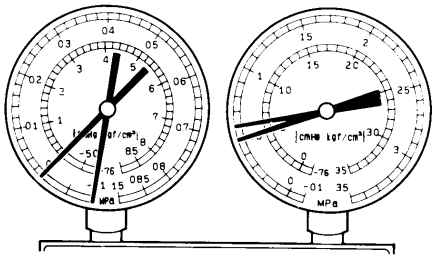

I01389

Symptom seen in refrigeration system	Probable cause	Diagnosis	Remedy
Pressure low in both low and high pressure sides Frost on tube from receiver to unit	Refrigerant flow obstructed by dirt in receiver	Receiver clogged	Replace condenser

(5) Refrigerant does not circulate

Condition: Does not cool (Cools from time to time in some cases)

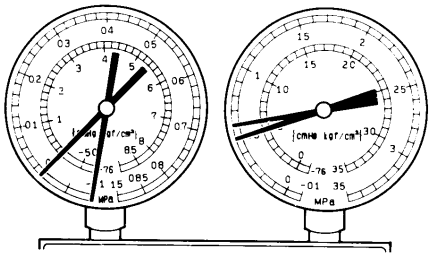

I01449

Symptom seen in refrigeration system	Probable cause	Diagnosis	Remedy
Vacuum indicated on low pressure side, very low pressure indicated on high pressure side Frost or dew seen on piping before and after condenser/ drier or expansion valve	Refrigerant flow obstructed by moisture or dirt in refrigeration system Refrigerant flow obstructed by gas leakage from expansion valve	Refrigerant does not circulate	(1) Check expansion valve (2) Clean out dirt in expansion valve by blowing with air (3) Replace condenser (4) Evacuate air and charge new refrigerant to proper amount (5) For gas leakage from expansion valve, replace expansion valve

(6) Refrigerant overcharged or insufficient cooling of condenser

Condition: Insufficient cooling

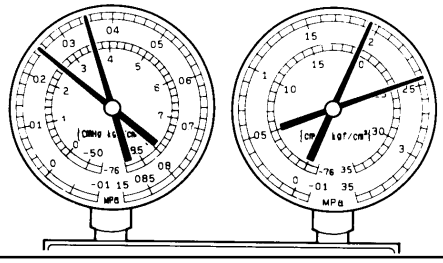

I01390

Symptom seen in refrigeration system	Probable cause	Diagnosis	Remedy
Pressure too high on both low and high pressure sides No air bubbles seen through the sight glass even when the engine rpm is lowered	Unable to develop sufficient performance due to excessive refrigeration system Insufficient cooling of condenser	Excessive refrigerant in cycle → refrigerant over charged Condenser cooling → condenser fins clogged of condenser fan faulty	(1) Clean condenser (2) Check condenser fan motor operation (3) If (1) and (2) are in normal state, check amount of refrigerant Charge proper amount of refrigerant

(7) Air present in refrigeration system

Condition: Insufficient cooling

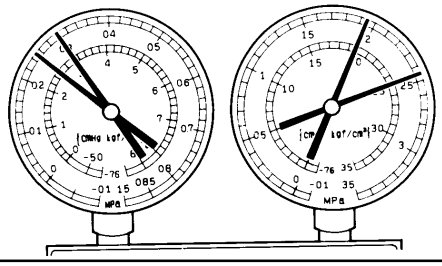

NOTE : These gauge indications are shown when the refrigeration system has been opened and the refrigerant charged without vacuum purging.

I01392

Symptom seen in refrigeration system	Probable cause	Diagnosis	Remedy
Pressure too high on both low and high pressure sides The low pressure piping hot to touch Bubbles seen in sight glass	Air entered in refrigeration system	Air present in refrigeration system Insufficient vacuum purging	(1) Check compressor oil to see if it is dirty or insufficient (2) Evacuate air and charge new refrigerant

(8) Expansion valve improperly

Condition: Insufficient cooling

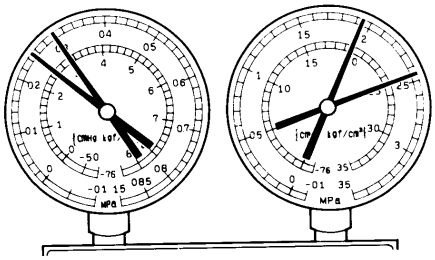

I01450

Symptom seen in refrigeration system	Probable cause	Diagnosis	Remedy
Pressure too high on both low and high pressure sides Frost or large amount of dew on piping on low pressure side	Trouble in expansion valve	Excessive refrigerant in low pressure piping Expansion valve opened too wide	Check expansion valve Replace if defective

(9) Defective compression compressor

Condition : Does not cool

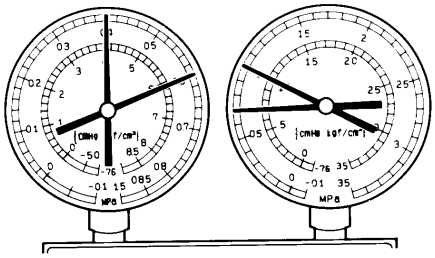

I01393

Symptom seen in refrigeration system	Probable cause	Diagnosis	Remedy
Pressure too high on low and high pressure sides Pressure too low on high pressure side	Internal leak in compressor	Compression defective Valve leaking or broken sliding parts	Repair or replace compressor

3. INSPECT FOR LEAKAGE OF REFRIGERANT

(a) Perform in these conditions:

Stop engine.

Secure good ventilation (If the gas leak detector may not react to volatile gases which are not refrigerant, such as evaporated gasoline and exhaust gas.)

Repeat the test 2 or 3 times.

Make sure that there is some refrigerant remaining in the refrigeration system.

When compressor is OFF: approx. 392 - 588 kPa (4 - 6 kgf/ cm^2, 57 - 85 psi)

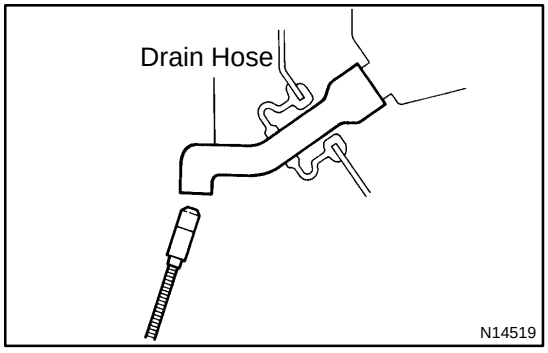

(b) Bring the gas leak detector close to the drain hose before performing the test.

HINT:

After the blower motor has stopped, leave the cooling unit for more than 15 minutes.

Expose the gas leak detector sensor under the drain hose.

When bring the gas leak detector close to the drain hose, make sure that the gas leak detector does not react to the volatile gases.

If such reaction is unavoidable, the vehicle must be lifted up.

(c) If gas leak is not detected on the drain hose, remove the blower resistor from the cooling unit. Then insert the gas leak detector sensor into the unit and perform the test.

(d) Disconnect the connector and leave the pressure switch for approx. 20 minutes. Then bring the gas leak detector close to the pressure switch and perform the test.

(e) Bring the gas leak detector close to the refrigerant lines and perform the test.

4. INSPECT IDLE-UP SPEED

(a) Warm up engine.

(b) Inspect idle-up speed when the these conditions are established.

Test conditions:

Idle speed set correctly.
Steering wheel straight ahead
Blower speed control switch at HI
A/C switch ON
Steering wheel straight ahead

Magnetic clutch condition	Idle speed
Magnetic clutch not engaged	700 ±50 rpm
Magnetic clutch engaged	700 ±50 rpm

If idle speed is not as specified, check the IAC valve and idle control system (See page SF-43 ,DI-102).

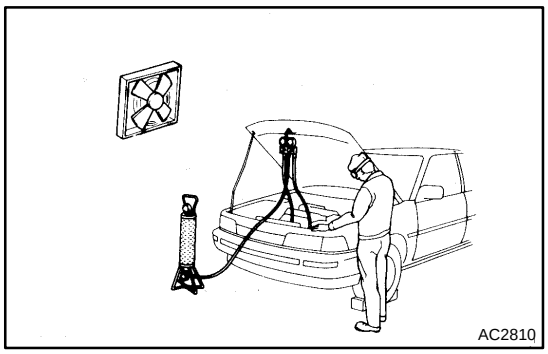
AC2810

AIR CONDITIONING SYSTEM

AC0Y9-02

PRECAUTION

1. DO NOT HANDLE REFRIGERANT IN AN ENCLOSED AREA OR WEAR EYE PROTECTION

2. ALWAYS WEAR EYE PROTECTION

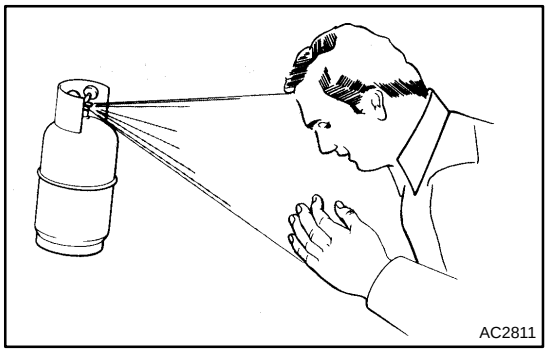
AC2811

3. BE CAREFUL NOT TO GET LIQUID REFRIGERANT IN YOUR EYES OR ON YOUR SKIN

If liquid refrigerant gets in your eyes or on your skin.

(a) Wash the area with lots of cool water.

CAUTION:

Do not rub your eyes or skin.

(b) Apply clean petroleum jelly to the skin.

(c) Go immediately to a physician or hospital for professional treatment.

4. NEVER HEAT CONTAINER OR EXPOSE IT TO NAKED FLAME

5. BE CAREFUL NOT TO DROP CONTAINER AND NOT TO APPLY PHYSICAL SHOCKS TO IT

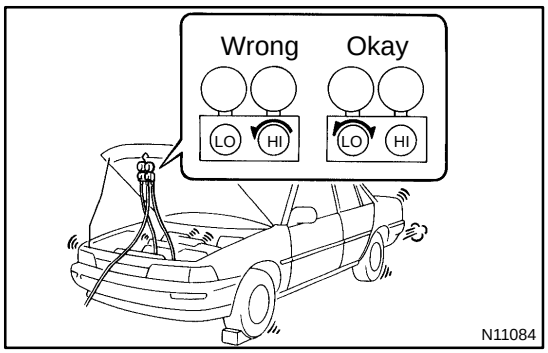

N11084

6. DO NOT OPERATE COMPRESSOR WITHOUT ENOUGH REFRIGERANT IN REFRIGERATION SYSTEM

If there is not enough refrigerant in the refrigerant system oil lubrication will be insufficient and compressor burnout may occur, so that care to avoid this, necessary care should be taken.

7. DO NOT OPEN PRESSURE MANIFOLD VALVE WHILE COMPRESSOR IS OPERATE

If the high pressure valve is opened, refrigerant flows in the reverse direction and could cause the charging cylinder to rupture, so open and close the only low pressure valve.

8. BE CAREFUL NOT TO OVERCHARGE SYSTEM WITH REFRIGERANT

If refrigerant is overcharged, it causes problems such as insufficient cooling, poor fuel economy, engine overheating etc.

9. SUPPLEMENTAL RESTRAINT SYSTEM (SRS)

The AVALON is equipped with an SRS (Supplemental Restraint System) such as the driver and front passenger airbag. Failure to carry out service operation in the correct sequence could cause the SRS to unexpectedly deploy during servicing, possibly leading to a serious accident. Before servicing (including removal or installation of parts, inspection or replacement), be sure to read the precautionary notices in the RS section.

AC2FY-01

COMPONENTS

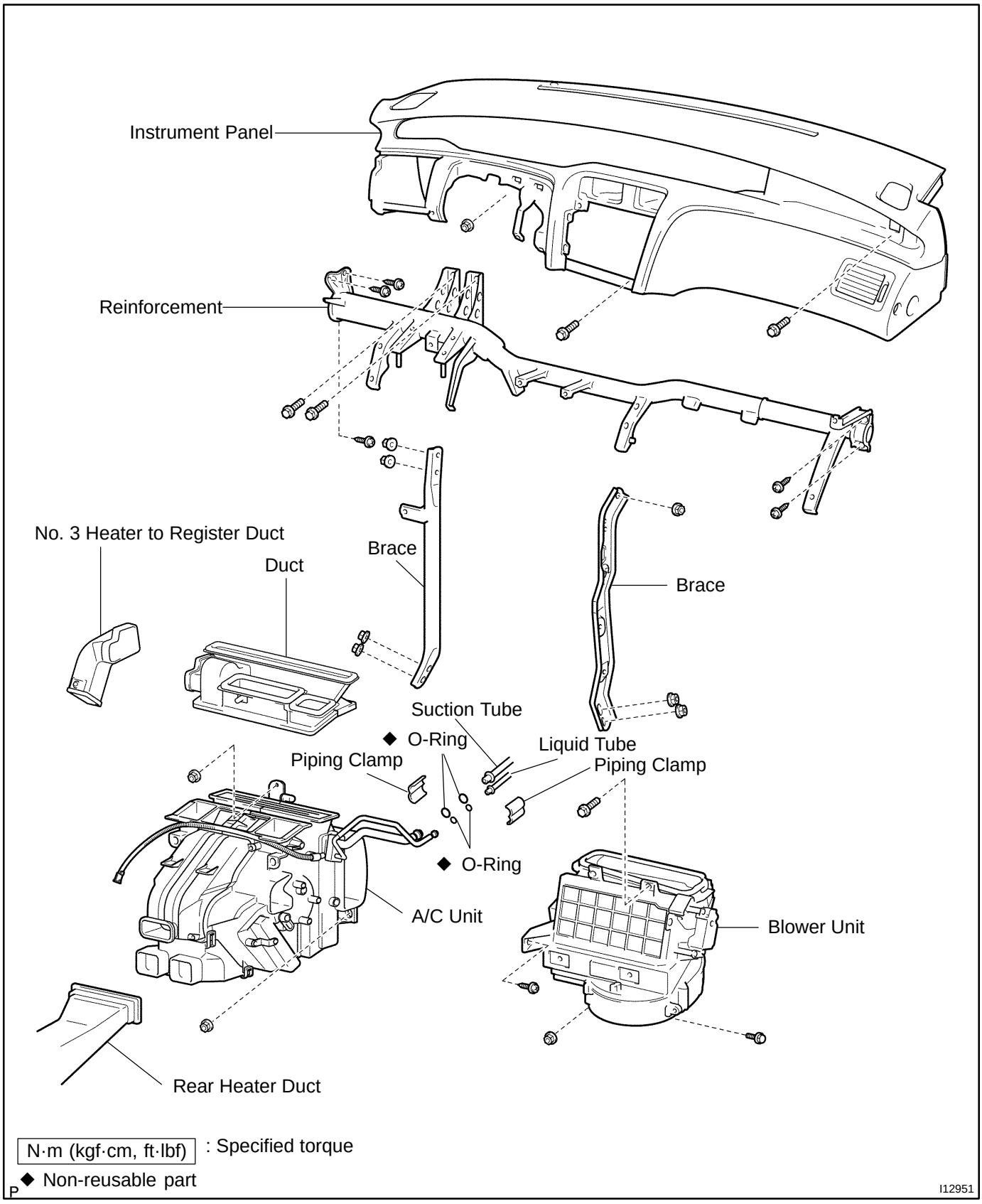

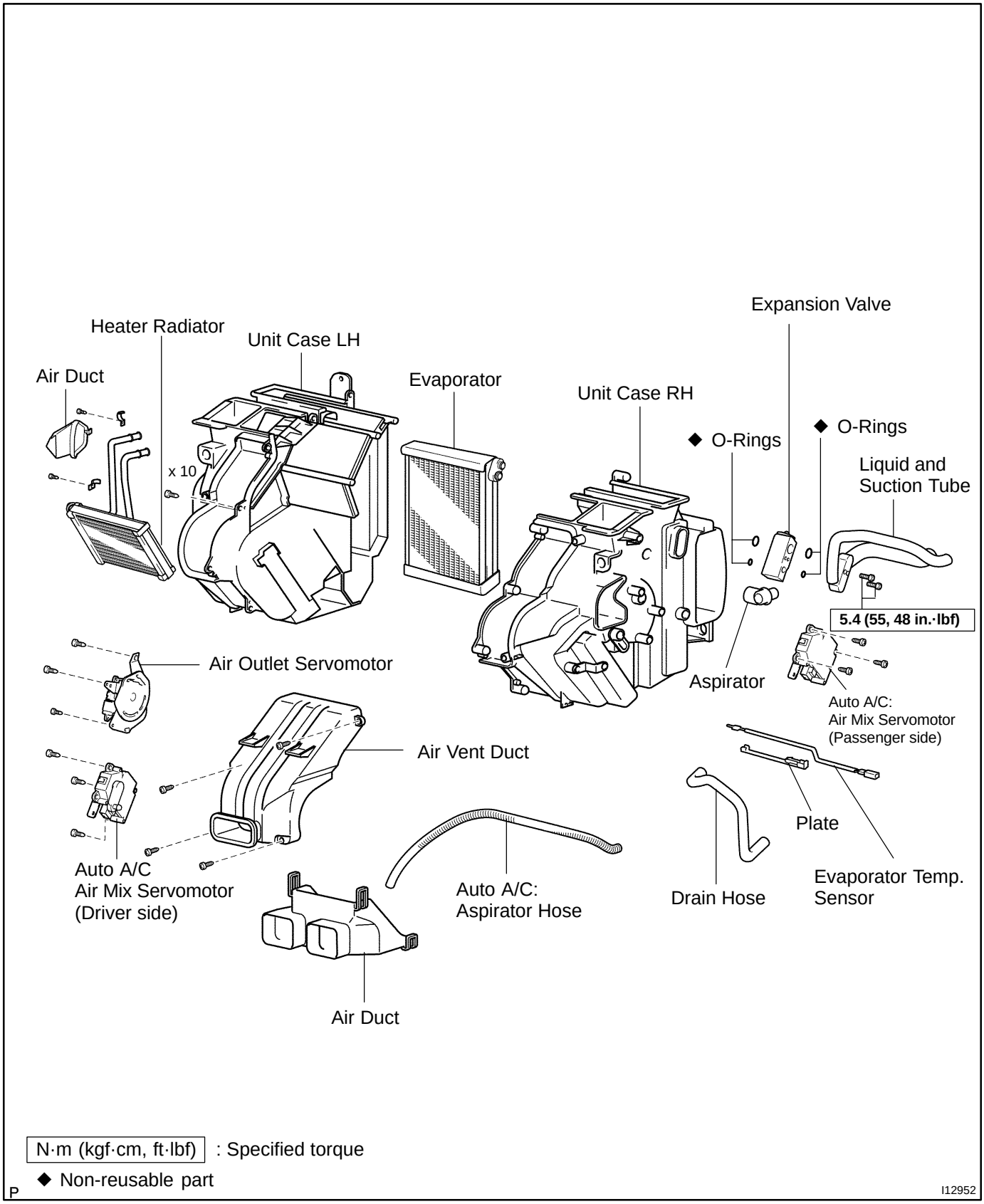
Expansion Valve
Heater Radiator
Unit Case LH
Air Duct
Evaporator
Unit Case RH
◆ O-Rings
◆ O-Rings
Liquid and
Suction Tube
x 10
5.4 (55, 48 in.·lbf)
Air Outlet Servomotor
Aspirator
Auto A/C:
Air Mix Servomotor
(Passenger side)
Air Vent Duct
Plate
Auto A/C
Air Mix Servomotor
(Driver side)
Auto A/C:
Aspirator Hose
Drain Hose
Evaporator Temp.
Sensor
Air Duct
N·m (kgf·cm, ft·lbf) : Specified torque
◆ Non-reusable part
I12952

AC2HX-01

DISASSEMBLY

1. REMOVE AIR VENT DUCT

2. REMOVE EVAPORATOR TEMP. SENSOR

Pull out the sensor.

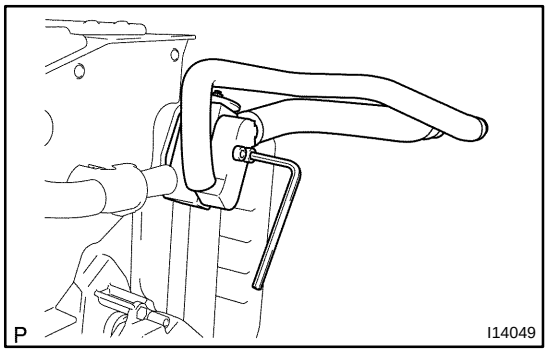

3. REMOVE EXPANSION VALVE

Using a hexagon wrench, remove the 2 bolts and separate the evaporator, expansion valve, liquid and suction tube.

Torque: 5.4 N·m (55 kgf·cm, 48 in.·lbf)

HINT:

At the time of reassembly, please refer to the following item.

Lubricate 4 new O-rings with compressor oil and install them to the valve.

4. Auto A/C only:
REMOVE BLOWER MOTOR LINEAR CONTROLLER

Remove the 2 screws and controller.

5. REMOVE BLOWER RESISTOR

Remove the 2 screws and blower resistor.

6. Auto A/C only:
REMOVE AIR MIX SERVOMOTOR (Driver side)

Remove the 3 screws and servomotor.

7. Auto A/C only:
REMOVE AIR MIX SERVOMOTOR (Passenger side)

Remove the 3 screws and servomotor.

8. REMOVE AIR OUTLET SERVOMOTOR

Remove the 3 screws and servomotor.

9. REMOVE ASPIRATOR

Remove the screw and aspirator.

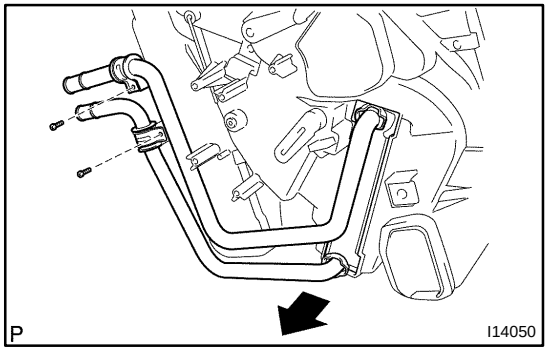

10. REMOVE HEATER RADIATOR

(a) Remove the air duct.
(b) Remove the 2 screws and 2 clamps.
(c) Pull out the heater radiator.

11. REMOVE EVAPORATOR

(a) Remove the 10 screws and separate the A/C unit case.

(b) Pull out the evaporator.

HINT:

At the time of reassembly, please refer to the following item.

If evaporator is replaced, add compressor oil to evaporator.

Add 40 cc (1.4 fl.oz.)

Compressor oil: ND-OIL 8 or equivalent

AC2G0-01

INSPECTION

1. CHECK EVAPORATOR FINS FOR BLOCKAGE

If the fins are clogged, clean them with compressed air.

NOTICE:

Never use water to clean the evaporator.

2. CHECK FITTINGS FOR CRACKS OR SCRATCHES

Repair as necessary.

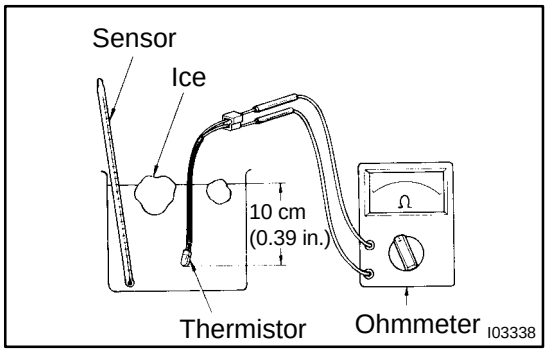

3. INSPECT EVAPORATOR TEMPERATURE SENSOR

(a) Place the sensor in cold water, and while changing the temperature of water, measure resistance at the connector and at the same time, measure temperature of water with a thermometer.

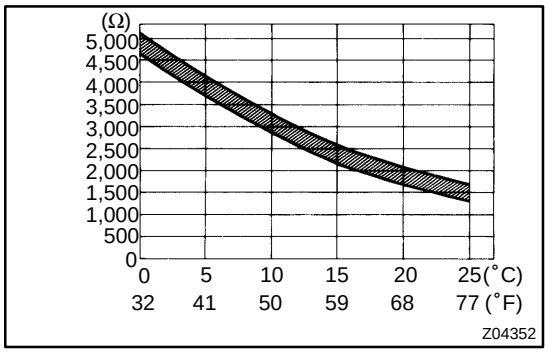

(b) Compare the 2 readings on the chart.

If resistance is not as specified, replace the thermistor.

AC0YR-02

INSTALLATION

Installation is in the reverse order of removal (See page AC-28).

AIR CONDITIONING UNIT

AC2FX-01

ON-VEHICLE INSPECTION

INSPECT FOR LEAKAGE OF REFRIGERANT

(a) Remove the glove compartment door (See page BO-90).
(b) Remove the blower resister.
(c) Using a gas leak detector, check for leakage of refrigerant.

If there is leakage, check the tightening torque at the joints or check the evaporator.

AC2HI-01

REASSEMBLY

Reassembly is in the reverse order of disassembly (See page AC-30).

AC2KB-01

REMOVAL

1. DISCHARGE REFRIGERANT FROM REFRIGERATION SYSTEM

HINT:

At the time of installation, please refer to the following item.

Evacuate air from refrigeration system.

Charge system with refrigerant and inspect for leakage of refrigerant.

Specified amount: 600 ± 50 g (21.16 ± 1.76 oz.)

2. DRAIN ENGINE COOLANT FROM RADIATOR

HINT:

It is not necessary to drain out all coolant.

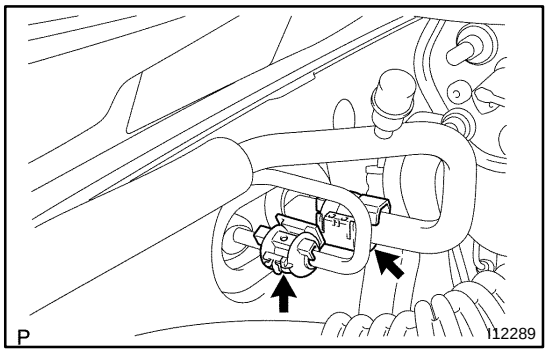

3. DISCONNECT LIQUID AND SUCTION TUBES

(a) Using SST, remove the 2 piping clamps.

SST 09870-00015 (Suction tube)
09870-00025 (Liquid tube)

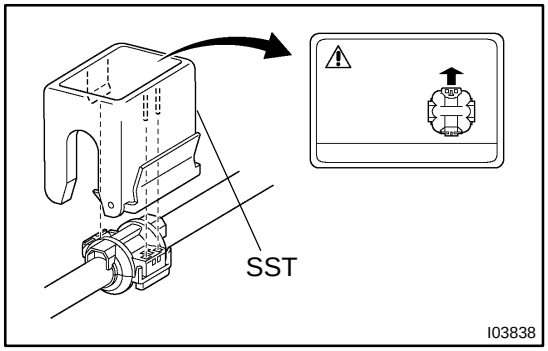

(1) Insert SST to piping clamp.

HINT:

Confirm the direction of the piping clamp claw and SST using the illustration showing on the caution label.

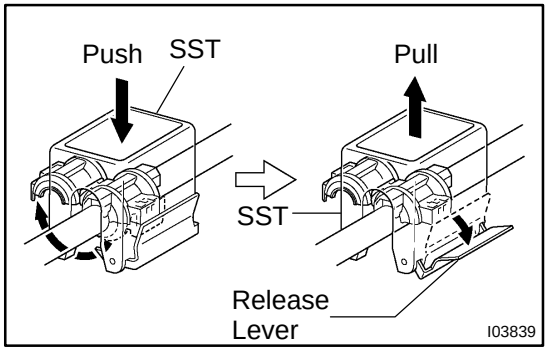

(2) Push down SST and release the clamp lock.

NOTICE:

Be careful not to deform the tubes, when pushing SST.

(3) Pull SST slightly and push the release lever, then remove the piping clamp with SST.

(4) Remove the piping clamp from SST.

(b) Disconnect the both tubes.

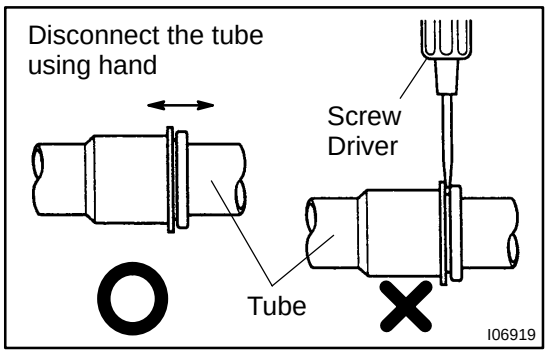

NOTICE:

- **Do not use tools like screwdriver to remove the tube.**
- **Cap the open fittings immediately to keep moisture or dirt out of the system.**

4. REMOVE INSTRUMENT PANEL AND REINFORCEMENT (See page BO-90)

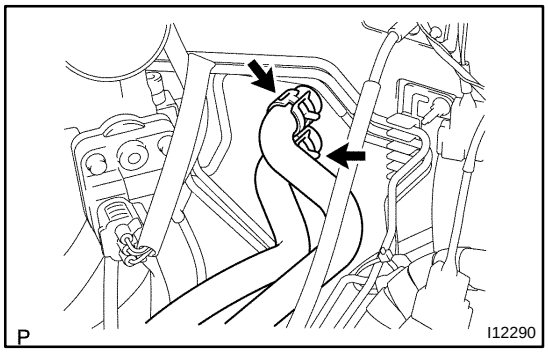

5. DISCONNECT WATER HOSES FROM HEATER RADIATOR PIPES

(a) Using pliers, grip the claw of the hose clip and slide the hose clip along the hose.

(b) Disconnect the water hoses.

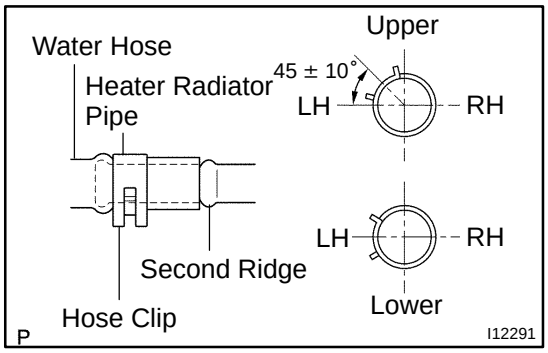

HINT:

At the time of installation, please refer to the following item.

Push the water hose onto the heater radiator pipe as far as second ridge on the pipe and install the hose clip.

6. REMOVE BLOWER UNIT (See page AC-37)

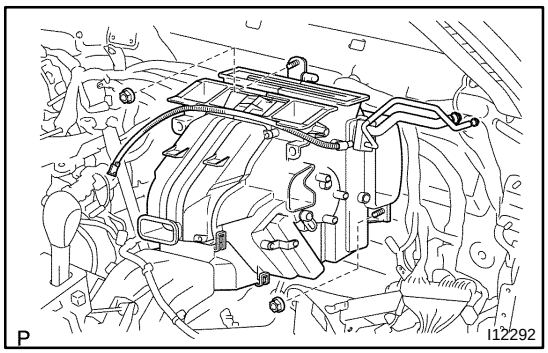

7. REMOVE A/C UNIT

(a) Remove the duct.

(b) Disconnect the connectors.

(c) Remove the 2 nuts and A/C unit.

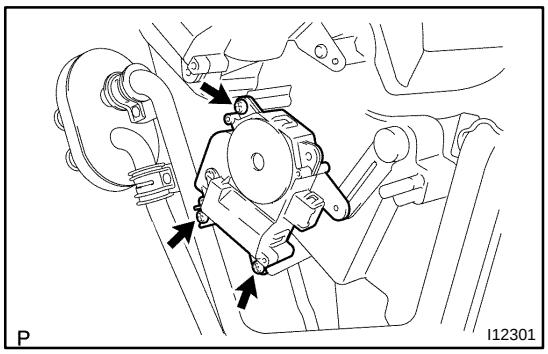

AIR MIX SERVOMOTOR (Auto A/C)

AC2GB-01

INSPECTION

1. Drive side:
REMOVE AIR MIX SERVOMOTOR

(a) Remove the lower No. 1 panel.
(b) Remove the lower LH panel insert.
(c) Disconnect the connector.
(d) Remove the 3 screws and the servomotor.

2. INSPECT AIR MIX DAMPER POSITION SENSOR CIRCUIT (See page DI-796)

3. INSPECT AIR MIX CONTROL SERVOMOTOR CIRCUIT (See page DI-799)

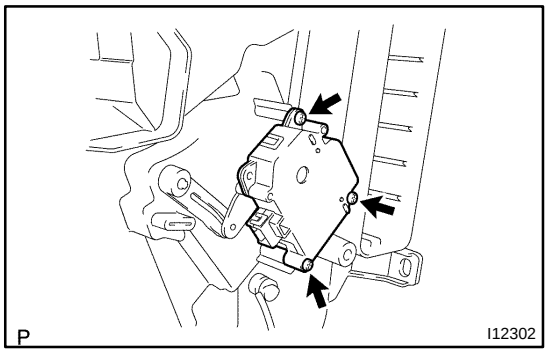

4. Passenger side:
REMOVE AIR MIX SERVOMOTOR

(a) Remove the blower unit (See page AC-37).
(b) Disconnect the connector.
(c) Remove the 3 screws and the servomotor.

5. INSPECT AIR MIX DAMPER POSITION SENSOR CIRCUIT (See page DI-787)

6. INSPECT AIR MIX CONTROL SERVOMOTOR CIRCUIT (See page DI-799)

7. Driver side:
INSTALL AIR MIX SERVOMOTOR

(a) Install the servomotor with the 3 screws.
(b) Connect the connector.
(c) Install the lower LH panel insert.
(d) Install the lower No. 1 panel.

8. Passenger side:
INSTALL AIR MIX SERVOMOTOR

(a) Install the servomotor with the 3 screws.
(b) Connect the connector.
(c) Install the blower unit (See page AC-37).

Author : Date : 1981

AIR OUTLET SERVOMOTOR

AC2GC-01

INSPECTION

1. REMOVE AIR OUTLET SERVOMOTOR

(a) Remove the instrument panel (See page BO-90).

(b) Disconnect the connector.

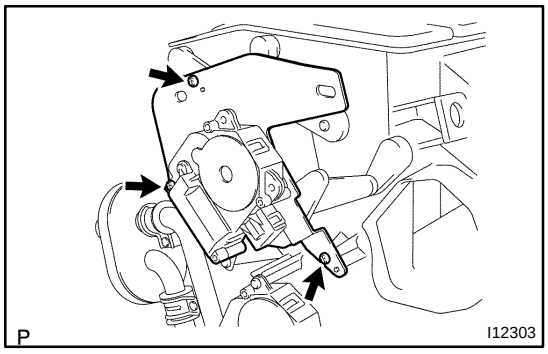

(c) Remove the 3 screws and servomotor.

2. INSPECT AIR OUTLET DAMPER POSITION SENSOR CIRCUIT (See page DI-793)

3. INSPECT AIR OUTLET DAMPER CONTROL SERVO-MOTOR CIRCUIT (See page DI-808)

4. INSTALL AIR OUTLET SERVOMOTOR

(a) Install the 3 screws with the 3 screws.

(b) Connect the connector.

(c) Install the instrument panel (See page BO-97).

AIR REFINER FILTER

AC2GS-01

REPLACEMENT

1. REMOVE GLOVE COMPARTMENT PARTS
(See page BO-90)

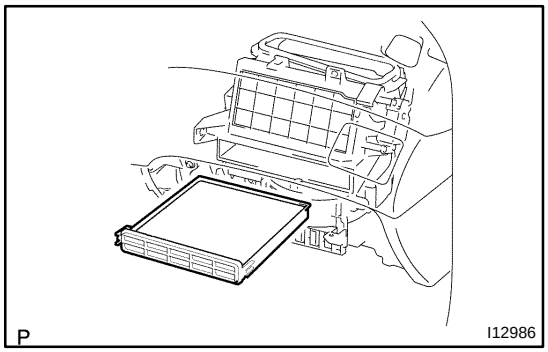

2. REMOVE AIR REFINER FILTER
(a) Remove the filter cover.
(b) Pull out the filter.
(c) Remove the filter from the frame.

3. INSTALL AIR REFINER FILTER
(a) Install the filter to the frame.
(b) Install the filter.
(c) Install the filter cover.

4. INSTALL GLOVE COMPARTMENT PARTS
(See page BO-97)

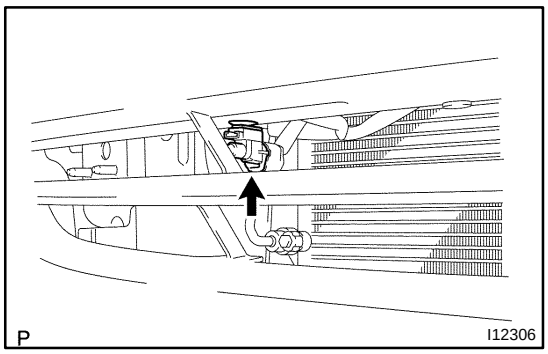

AMBIENT TEMPERATURE SENSOR

AC2GF-01

INSPECTION

1. REMOVE AMBIENT TEMPERATURE SENSOR

(a) Disconnect the connector.

(b) Remove the sensor.

2. INSPECT AMBIENT TEMPERATURE SENSOR CIRCUIT (See page DI-766)

3. INSTALL AMBIENT TEMPERATURE SENSOR

(a) Install the sensor.

(b) Connect the connector.

BLOWER MOTOR

AC2G8-01

INSPECTION

1. REMOVE GLOVE COMPARTMENT PARTS
(See page BO-90)

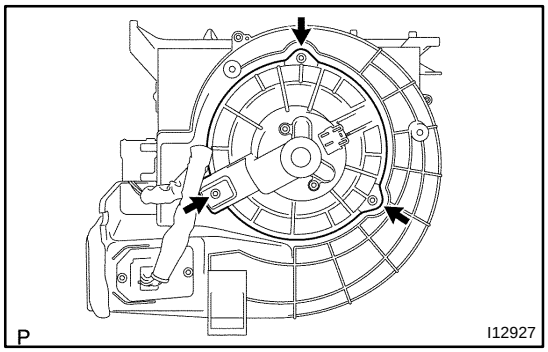

2. REMOVE BLOWER MOTOR

(a) Disconnect the connector.

(b) Remove the 3 screws and blower motor.

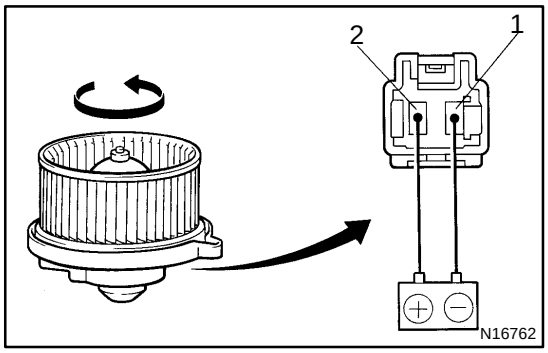

3. INSPECT BLOWER MOTOR OPERATION

Connect the positive (+) lead from the battery to terminal 2 and negative (-) lead to terminal 1, then check that the motor operations smoothly.

If operation is not as specified, replace the blower motor.

4. INSTALL BLOWER MOTOR

(a) Install the blower motor with the 3 screws.

(b) Connect the connector.

5. INSTALL GLOVE COMPARTMENT PARTS
(See page BO-97)

BLOWER RESISTOR (Manual A/C)

AC2G9-01

INSPECTION

1. REMOVE GLOVE COMPARTMENT PARTS
(See page BO-90)

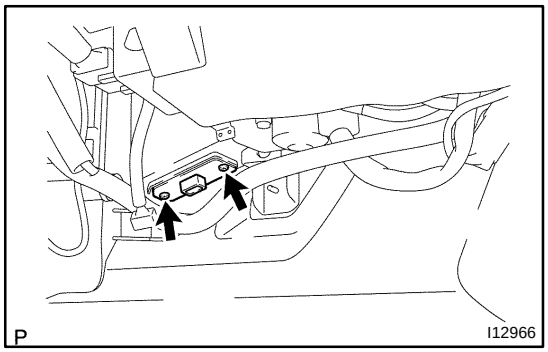

2. REMOVE BLOWER RESISTOR

(a) Disconnect the connector.

(b) Remove the 2 screws and blower resistor.

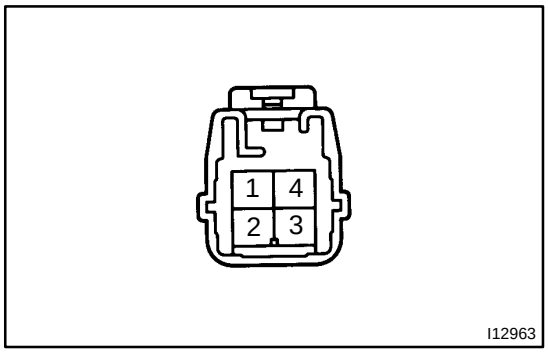

3. INSPECT BLOWER RESISTOR RESISTANCE

Measure resistance between terminals, as shown in the chart below.

Tester connection	Condition	Specified condition
1 - 3	Constant	Approx. 0.42 Ω
1 - 4	Constant	Approx. 1.42 Ω
2 - 4	Constant	Approx. 2.24 Ω

If resistance is not as specified, replace the blower resistor.

4. INSTALL BLOWER RESISTOR

(a) Install the blower resistor with the 2 screws.

(b) Connect the connector.

5. INSTALL GLOVE COMPARTMENT PARTS
(See page BO-97)

BLOWER UNIT

COMPONENTS

AC2G1-01

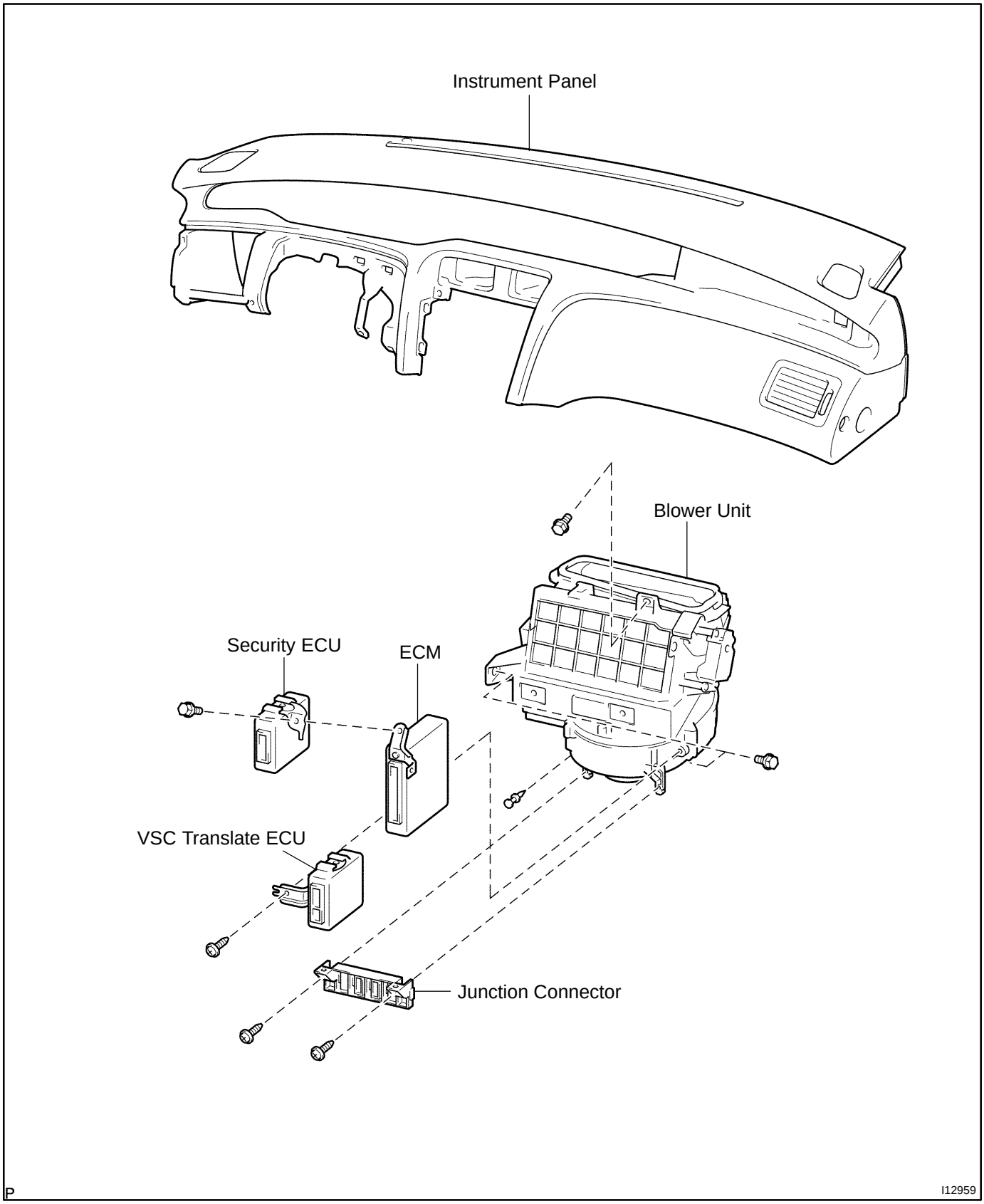

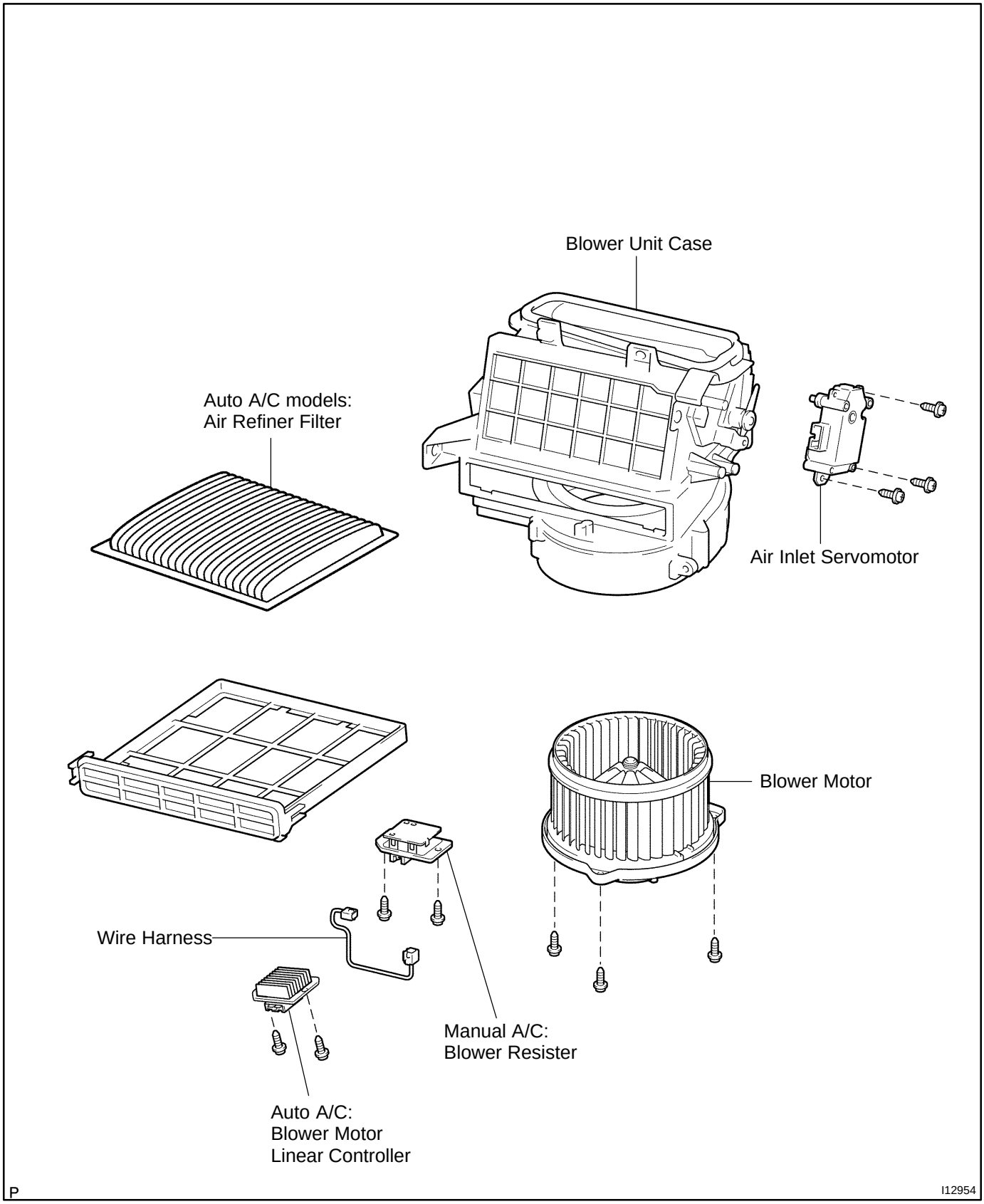
Blower Unit Case
Auto A/C models:
Air Refiner Filter
Air Inlet Servomotor
Blower Motor
Wire Harness
Manual A/C:
Blower Resister
Auto A/C:
Blower Motor
Linear Controller
P
I12954

AC2G2-01

DISASSEMBLY

1. REMOVE AIR REFINER FILTER

(a) Release the 2 claws and remove the cover.
(b) Pull out the air refiner filter.
(c) Remove the filter from filter case.

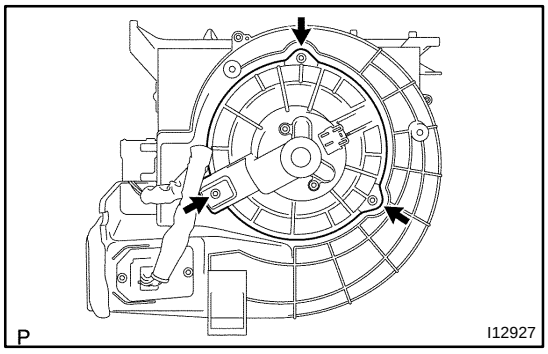

2. REMOVE BLOWER MOTOR

Remove the 3 screws and motor.

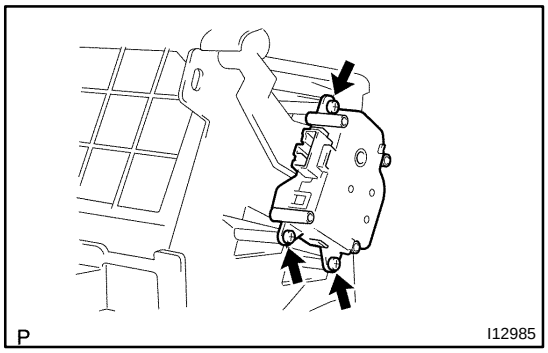

3. REMOVE AIR INLET SERVOMOTOR

Remove the 3 screws and servomotor.

AC2G3-01

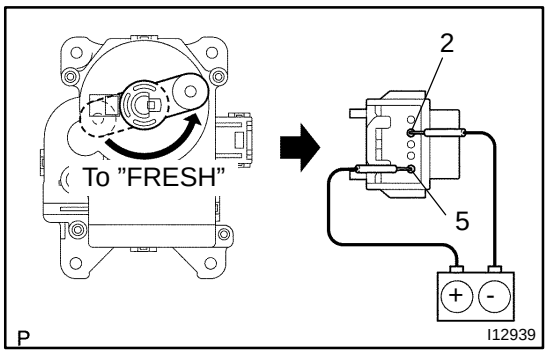

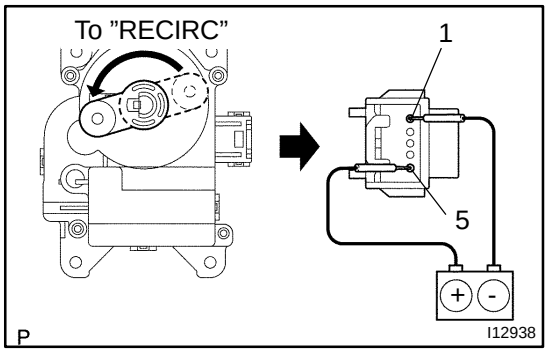

INSPECTION

1. Manual A/C:

INSPECT AIR INLET SERVOMOTOR

Inspect the servomotor operation.

(1) Connect the positive (+) lead from the battery to terminal 5 and negative (-) lead to terminal 2.

(2) Check the motor arm rotates counterclockwise and arm stops on the ”FRESH” position.

(3) Connect the positive (+) lead from the battery to terminal 5 and negative (-) lead to terminal 1.

(4) Check the motor arm rotates counterclockwise and arm stops on the ”RECIRC” position.

If operations are not as specified, replace the servomotor.

2. Auto A/C:

INSPECT AIR INLET DAMPER POSITION SENSOR CIRCUIT (See page DI-790)

3. Auto A/C:

INSPECT AIR INLET CONTROL SERVOMOTOR CIRCUIT (See page DI-802)

AC0YW-02

INSTALLATION

Installation is in the reverse order of removal (See page AC-37).

AC0YV-02

REASSEMBLY

Reassembly is in the reverse order of disassembly (See page AC-38).

AC0YT-03

REMOVAL

1. **REMOVE INSTRUMENT PANEL (See page BO-90)**
2. **REMOVE SECURITY ECU**
3. **REMOVE TRANSLATE ECU**
4. **REMOVE ECM**

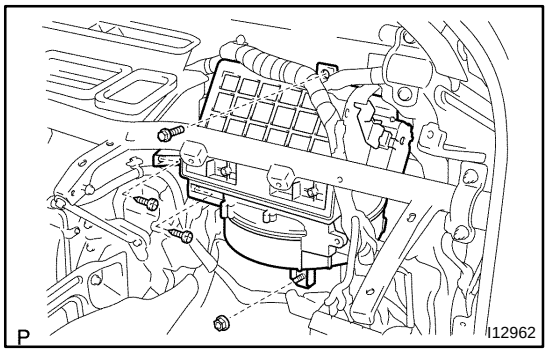

5. **REMOVE BLOWER UNIT**

(a) Remove the 2 connector bracket set screws.

(b) Disconnect the connectors.

(c) Remove the bolt, nut, 2 screws and blower unit.

BLOWER MOTOR LINEAR CONTROLLER (Auto A/C)

AC2GA-01

INSPECTION

1. REMOVE GLOVE COMPARTMENT PARTS
(See page BO-90)

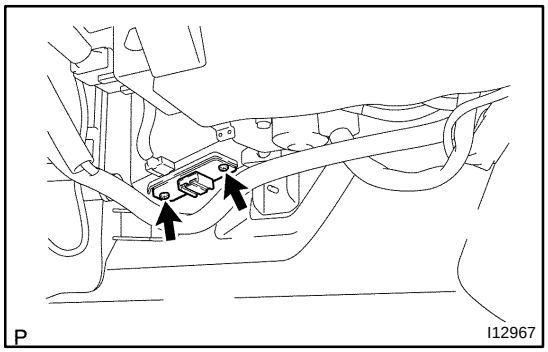

2. REMOVE BLOWER MOTOR LINEAR CONTROLLER

(a) Disconnect the connector.

(b) Remove the 2 screws and controller.

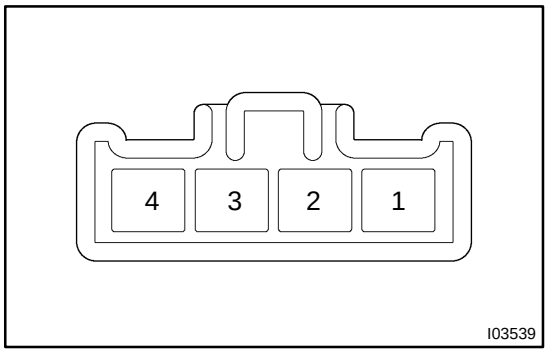

3. INSPECT BLOWER MOTOR LINEAR CONTROLLER CIRCUIT

Connect the connector to the controller and inspect the wire harness side connector from the back side, as shown in the chart.

Test conditions:

- Turn ignition switch to ON
- Operate blower motor

Tester connection	Condition	Specified conditions
1 - Ground	Constant	Continuity
2 - Ground	Constant	Battery positive voltage
2 - Ground	Turn ignition switch to LOCK or ACC	No voltage

If the circuit is as specified, try to replace the controller with a new one. If the circuit is not as specified, inspect the circuits connected to other parts.

4. INSTALL BLOWER MOTOR LINEAR CONTROLLER

(a) Install the blower motor linear controller with the 2 screws.

(b) Connect the connector.

5. INSTALL GLOVE COMPARTMENT PARTS
(See page BO-97)

AC1N0-02

COMPONENTS

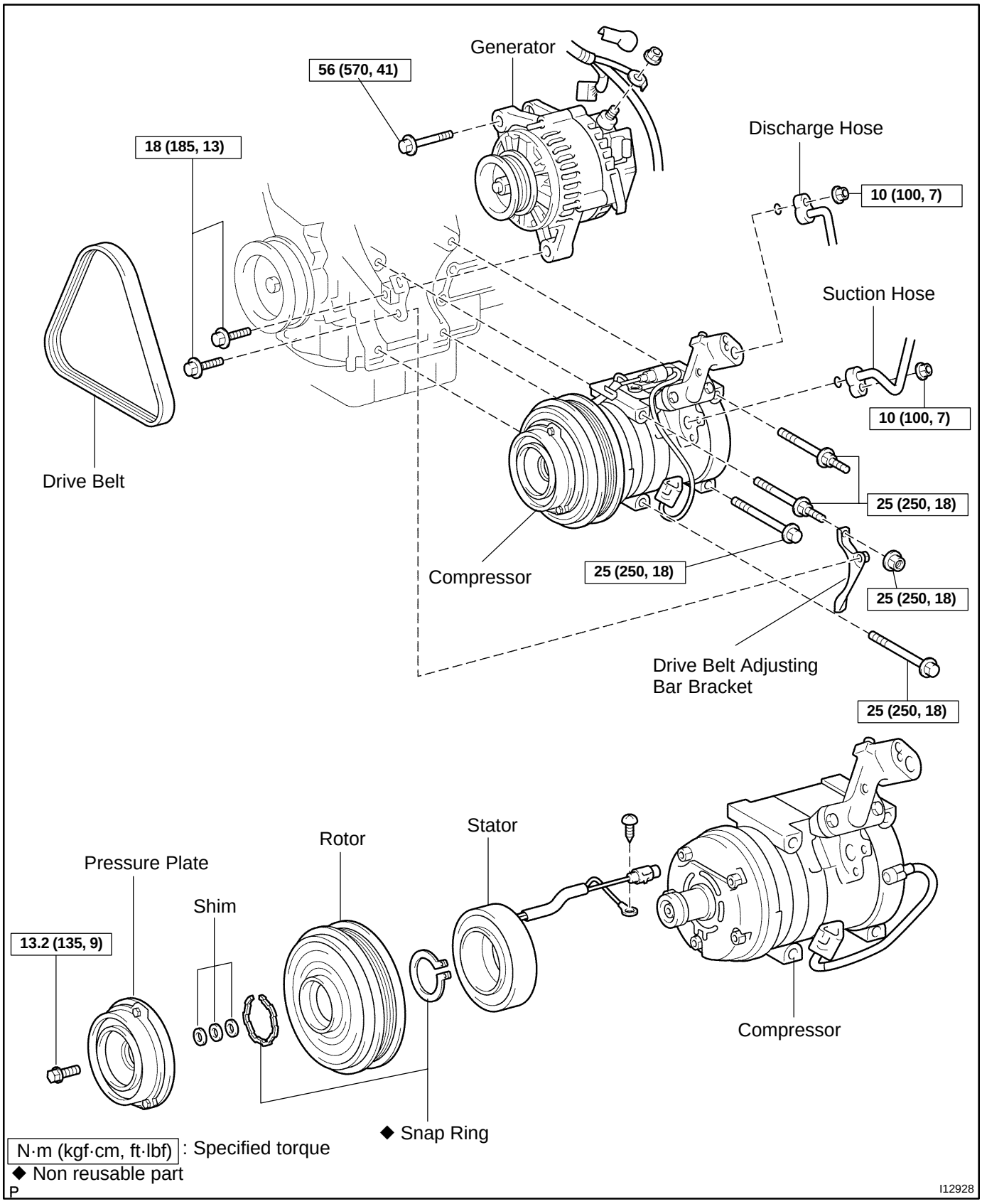

AC1N2-04

DISASSEMBLY

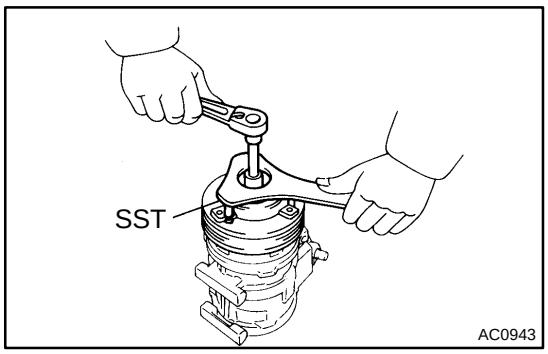

1. REMOVE PRESSURE PLATE

(a) Using SST and a socket wrench, remove the shaft bolt.
SST 07112-76060
Torque: 13.2 N·m (135 kgf·cm, 9 ft·lbf)

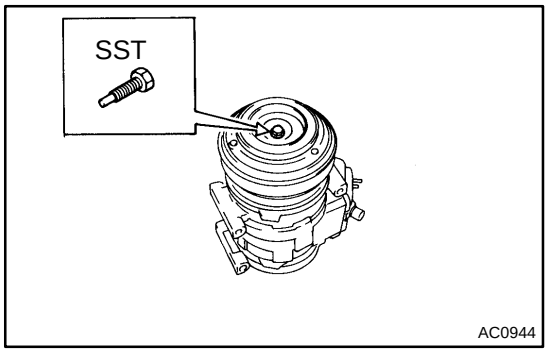

(b) IInstall SST on the pressure plate.
SST 07112-66040

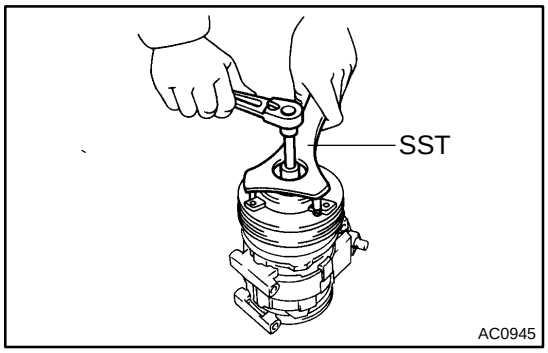

(c) Using SST and socket wrench, remove the pressure plate.
SST 07112-76060, 07112-66040

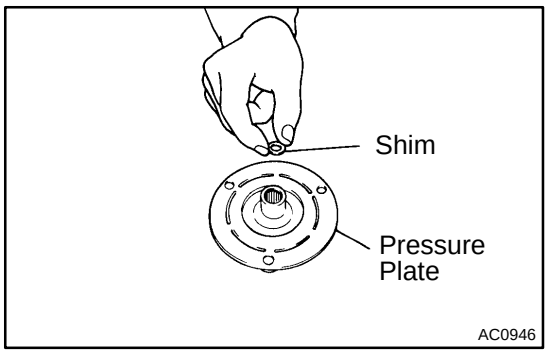

(d) Remove the shims from the pressure plate.

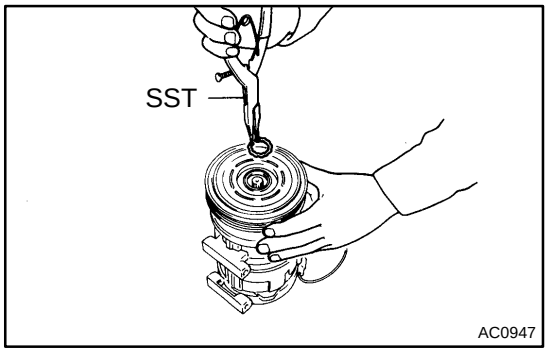

2. REMOVE ROTOR

(a) Using SST, remove the snap ring.
SST 95994-10020

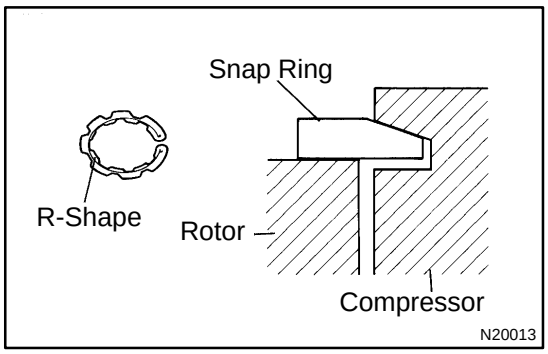

NOTICE:
At the time of reassembly, please refer to the following item.
The snap ring should be installed so that beveled side faces up.

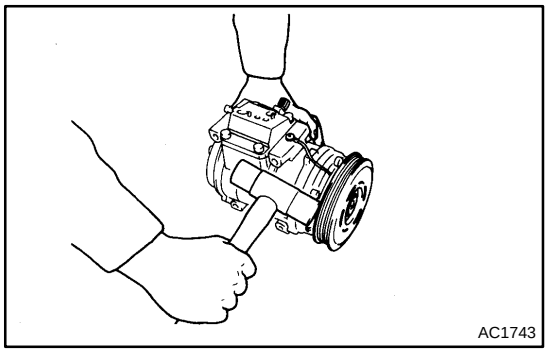

(b) Using a plastic hammer, tap the rotor off the shaft.

NOTICE:
Be careful not to damage the pulley when tapping on the rotor.

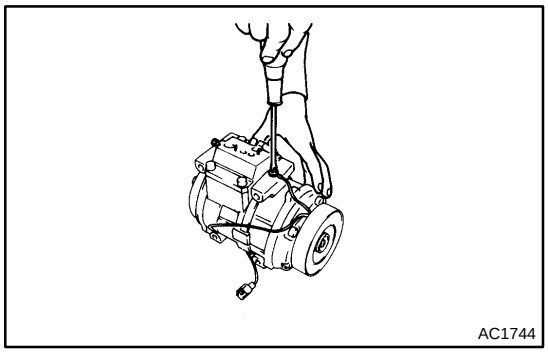

3. REMOVE STATOR

(a) Disconnect the stator lead wire from the compressor housing.

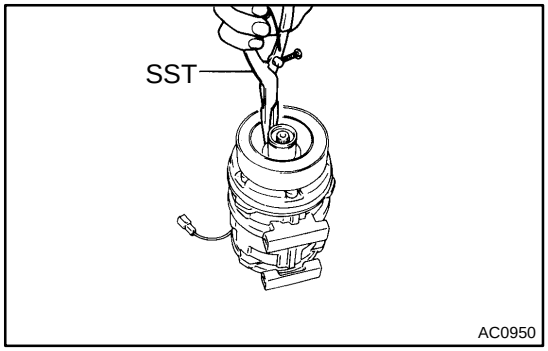

(b) Using SST, remove the snap ring.
SST 95994-10020

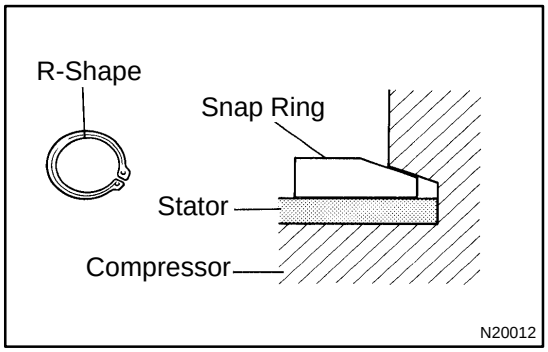

NOTICE:
At the time of reassembly, please refer to the following item.
The snap ring should be installed so that its beveled side faces up.

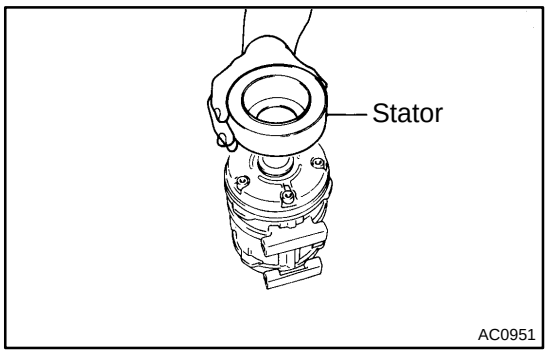

(c) Remove the stator.

AC1N4-02

INSTALLATION

1. INSTALL COMPRESSOR

(a) Install the compressor with 3 nuts.
Torque: 25 N·m (250 kgf·cm, 18 ft·lbf)

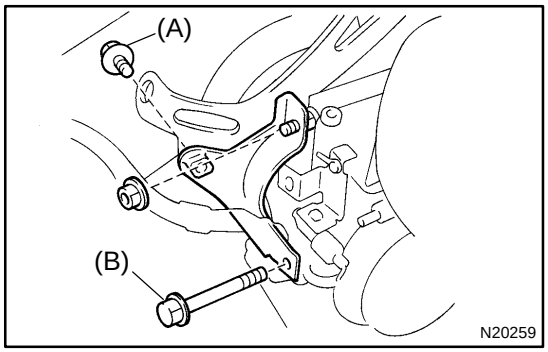

(b) Install the generator drive belt adjusting bar bracket with 2 bolts and a nut.
Torque:
Bolt (A): 18 N·m (185 kgf·cm, 13 ft·lbf)
Bolt (B): 25 N·m (250 kgf·cm, 18 ft·lbf)
Nut: 25 N·m (250 kgf·cm, 18 ft·lbf)

2. INSTALL GENERATOR

(a) Mount generator on the generator bracket with the pivot bolt and adjusting lock bolt. Do not tighten the bolts yet.
(b) Connect the generator connector.
(c) Connect the generator wire with the nut.

3. CONNECT DISCHARGE AND SUCTION HOSES

Connect both hoses with the bolt and nut.
Torque: 10 N·m (100 kgf·cm, 7 ft·lbf)

NOTICE:
Hoses should be connected immediately after the caps have been removed.

HINT:
Lubricate 2 new O-ring with compressor oil and install them to the tube.

4. INSTALL AND CHECK DRIVE BELT
(See page AC-19 , AC-17)

5. CONNECT NEGATIVE (-) TERMINAL CABLE TO BATTERY

6. EVACUATE AIR FROM REFRIGERATION SYSTEM AND CHARGE WITH REFRIGERANT
Specified amount: 600 ± 50 g (21.16 ± 1.76 oz.)

7. INSPECT FOR LEAKAGE OF REFRIGERANT

Using a gas leak detector, check for leakage of refrigerant.
If there is leakage, check the tightening torque at the joints.

8. INSPECT A/C OPERATION

COMPRESSOR AND MAGNETIC CLUTCH

AC2G4-01

ON-VEHICLE INSPECTION

1. INSPECT COMPRESSOR FOR METALLIC SOUND

Check there is abnormal metallic sound from the compressor when the A/C switch is ON.

If abnormal metallic sound is heard, replace the compressor assembly.

2. INSPECT REFRIGERANT PRESSURE

(See page AC-3)

3. INSPECT VISUALLY FOR LEAKAGE OF REFRIGERANT

Using a gas leak detector, check for leakage of refrigerant.

If there is any leakage, replace the compressor assembly.

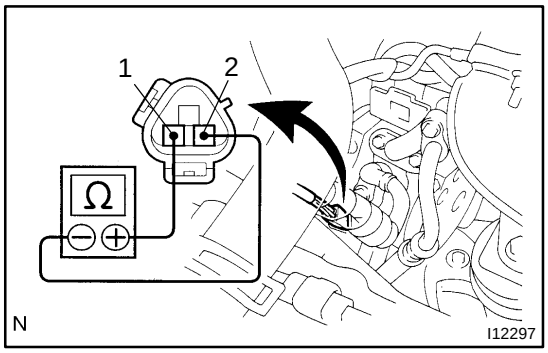

4. INSPECT COMPRESSOR LOCK SENSOR RESISTANCE

(a) Disconnect the connector.

(b) Measure resistance between terminals 1 and 2.

Standard resistance: 65 - 125 Ω at 20 ˚C (68 ˚F)

If resistance is not as specified, replace the sensor.

5. CHECK FOR LEAKAGE OF GREASE FROM CLUTCH BEARING

6. CHECK FOR SIGNS OF OIL ON PRESSURE PLATE OR ROTOR

7. INSPECT MAGNETIC CLUTCH BEARING FOR NOISE

(a) Start engine.

(b) Check for abnormal noise from the compressor when the A/C switch is OFF.

If abnormal noise is being emitted, replace the magnetic clutch.

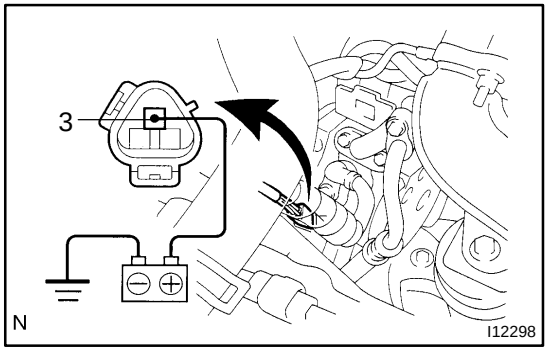

8. INSPECT MAGNETIC CLUTCH OPERATION

(a) Disconnect the connector.

(b) Connect the positive (+) lead from the battery to terminal 4 and the negative (-) lead to the body ground.

(c) Check that the magnetic clutch energized.

If operation is not as specified, replace the magnetic clutch.

AC1N3-02

REASSEMBLY

Reassembly is in the reverse order of disassembly (See page AC-46).

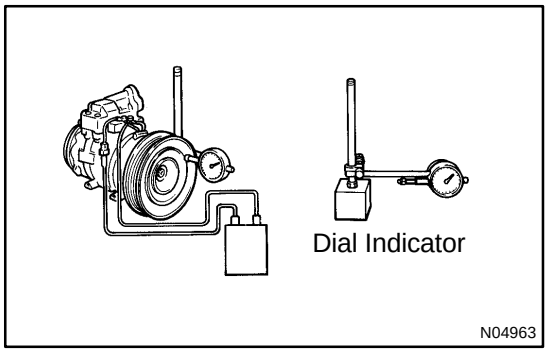

AFTER REASSEMBLY, CHECK MAGNETIC CLUTCH CLEARANCE

(a) Set the dial indicator to the pressure plate of the magnetic clutch.

(b) Connect the magnetic clutch lead wire to the positive (+) terminal of the battery.

(c) Check the clearance between the pressure plate and rotor when connecting the negative (-) terminal to the battery.

Standard clearance:
0.5 ± 0.15 mm (0.020 ± 0.0059 in.)

If the clearance is not within the standard, adjust the clearance using shims to obtain the standard.

Shim thickness:
0.1 mm (0.004 in.)
0.3 mm (0.012 in.)
0.5 mm (0.020 in.)

AC1N1-02

REMOVAL

1. **RUN ENGINE AT IDLE SPEED WITH A/C ON FOR APPROX. 10 MINUTES**
2. **STOP ENGINE**
3. **DISCONNECT NEGATIVE (-) TERMINAL CABLE FROM BATTERY**
4. **DISCHARGE REFRIGERANT FROM REFRIGERATION SYSTEM**
5. **REMOVE DRIVE BELT**
   (See page AC-18)

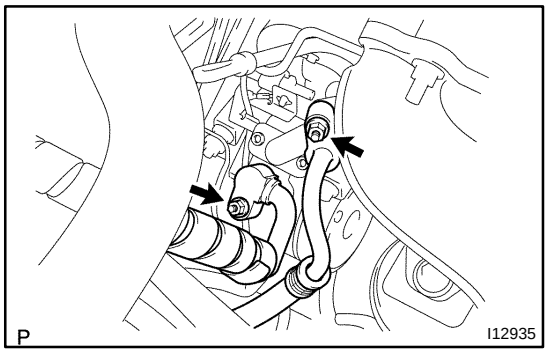

6. DISCONNECT DISCHARGE AND SUCTION HOSES

Remove the 2 nuts and disconnect the both hoses.

NOTICE:

Cap the open fittings immediately to keep moisture or dirt out of the system.

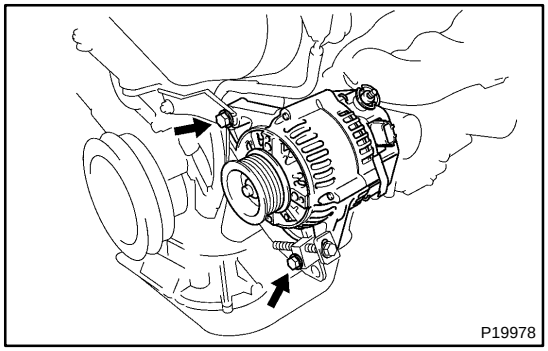

7. REMOVE GENERATOR

(a) Disconnect the generator connector.
(b) Remove the nut, and disconnect the generator wire.
(c) Disconnect the wire harness from the clamp.
(d) Remove the pivot bolt, adjusting lock bolt and generator.

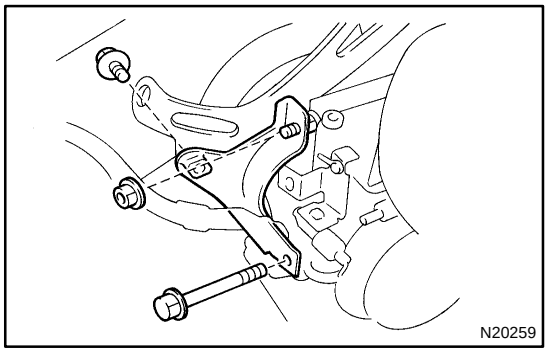

8. REMOVE COMPRESSOR

(a) Disconnect the connector.
(b) Disconnect the wire harness clamp.
(c) Remove the 2 bolts, nut and drive belt adjusting bar bracket.

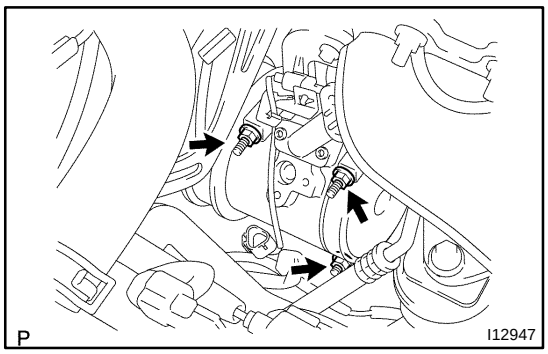

(d) Remove the 3 bolts and compressor.

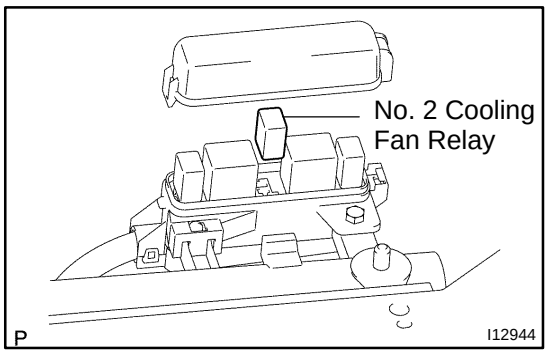

COOLING FAN RELAY

AC20V-02

INSPECTION

1. REMOVE NO. 2 COOLING FAN RELAY FROM RELAY BLOCK NO. 8

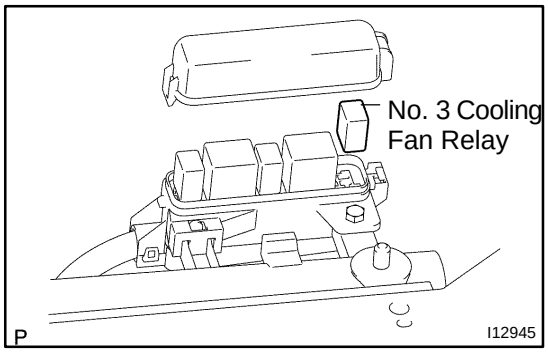

2. REMOVE NO. 3 COOLING FAN RELAY FROM RELAY BLOCK NO. 8

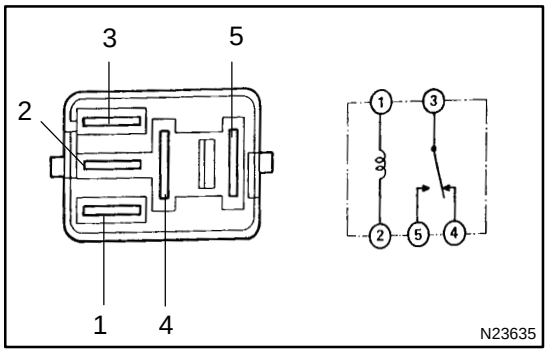

3. INSPECT NO. 2 COOLING FAN RELAY (Marking: A.C FAN NO. 2) CONTINUITY

Condition	Tester connection	Specified condition
Constant	1 - 2 3 - 4	Continuity
Apply B+ between terminals 1 and 2.	3 - 5	Continuity

If continuity is not as specified, replace the relay.

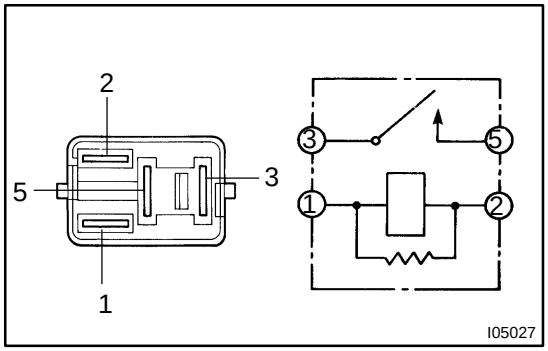

4. INSPECT NO. 3 COOLING FAN RELAY (Marking: A.C FAN NO. 3) CONTINUITY

Condition	Tester connection	Specified condition
Constant	1 - 2	Continuity
Apply B+ between terminals 1 and 2.	3 - 5	Continuity

If continuity is not as specified, replace the relay.

AC28I-02

COMPONENTS

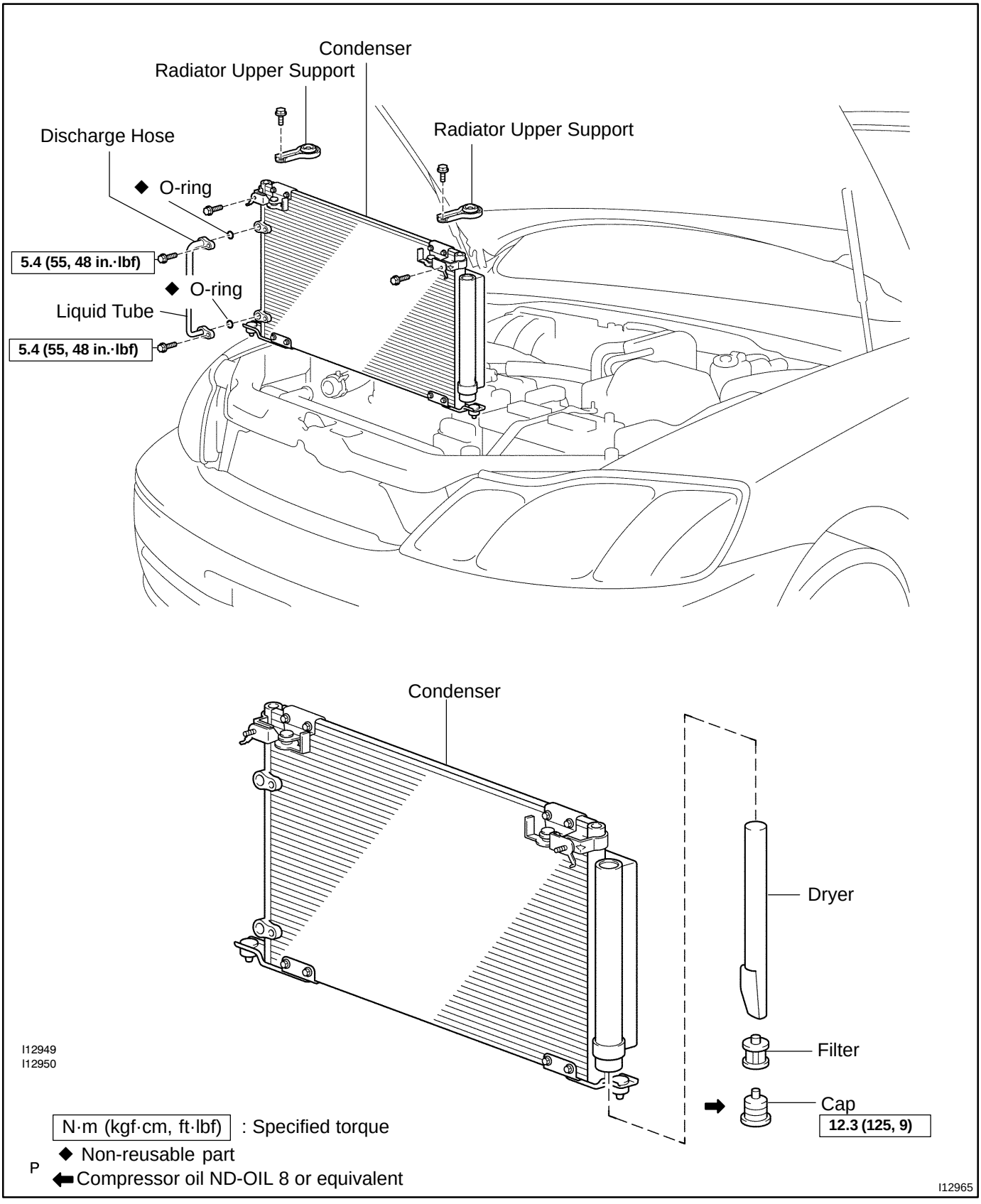

AC2G7-01

INSTALLATION

Installation is in the reverse order of removal (See page AC-53).

CONDENSER

AC2G5-01

ON-VEHICLE INSPECTION

1. INSPECT CONDENSER FINS FOR BLOCKAGE OR DAMAGE

If the fins are clogged, wash them with water and dry with compressed air.

NOTICE:

Be careful not to damage the fins.

If the fins are bent, straighten them with a screwdriver or pliers.

2. INSPECT CONDENSER AND FITTING FOR LEAKAGE

Using a gas leak detector, check for leakage.

If there is leakage, check the tightening torque at the joints.

AC2G6-01

REMOVAL

1. DISCHARGE REFRIGERANT FROM REFRIGERATION SYSTEM

HINT:

At the time of installation, please refer to the following item.

Evacuate air from refrigeration system.

Charge system with refrigerant and inspect for leakage of refrigerant.

Specified amount: 600 ± 50 g (21.16 ± 1.76 oz.)

2. REMOVE RADIATOR AND CONDENSER FANS

(See page AC-46)

3. REMOVE 2 RADIATOR UPPER SUPPORTS

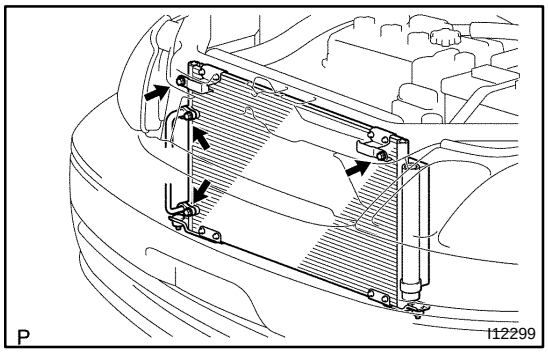

4. DISCONNECT DISCHARGE HOSE AND LIQUID TUBE

Remove the 2 bolts and disconnect the hose and tube.

Torque: 10 N·m (100 kgf·cm, 7 ft·lbf)

NOTICE:

Cap the open fittings immediately to keep moisture or dirt out of the system.

HINT:

At the time of installation, please refer to the following item.

Lubricate 2 new O-rings with compressor oil and install them to the hose.

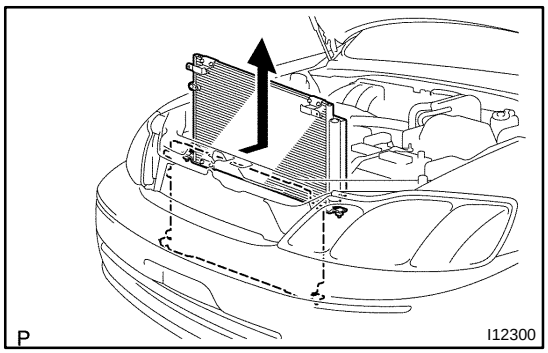

5. REMOVE CONDENSER

(a) Remove the 2 condenser set bolts.

(b) Push the radiator toward the engine.

(c) Push the condenser toward the radiator and pull it upward.

HINT:

At the time of installation, please refer to the following item.

If condenser is replaced, add compressor oil to the condenser.

Add 40 cc (1.4 fl.oz.)

Compressor oil: ND-OIL 8 or equivalent

AC28K-02

REPLACEMENT

REPLACE DRIER FROM MODULATOR

(a) Using a hexagon wrench (10 mm, 0.39 in.), remove the cap from the modulator.

(b) Remove the filter from the modulator.

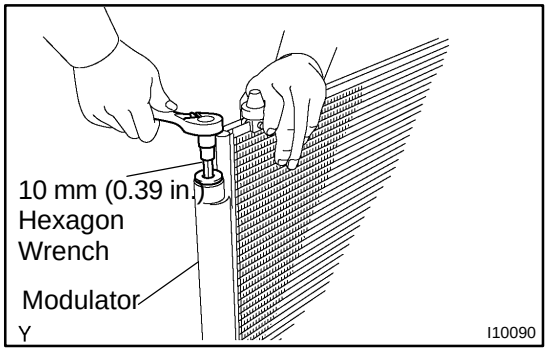

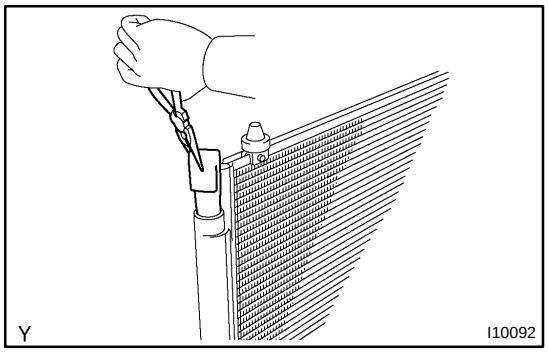

(c) Using pliers, remove the drier.

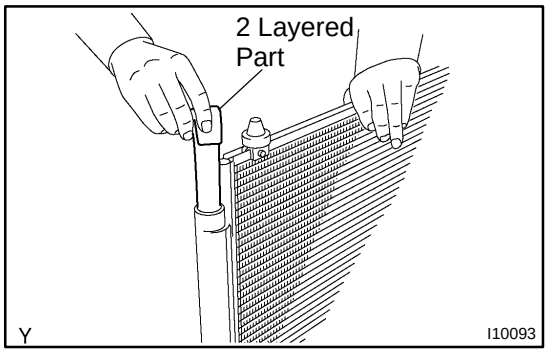

(d) Insert a new drier into the modulator.

NOTICE:

- **Do not remove the drier from a vinyl bag until inserting it into the modulator.**
- **Install the drier with its 2 layered part faced upward to the modulator.**

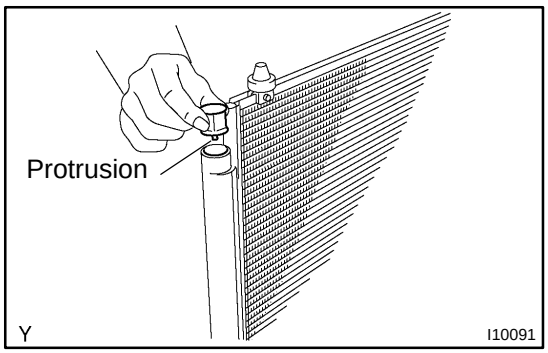

(e) Insert the filter into the modulator.

NOTICE:

Install the filter with its protrusion faced downward to the modulator.

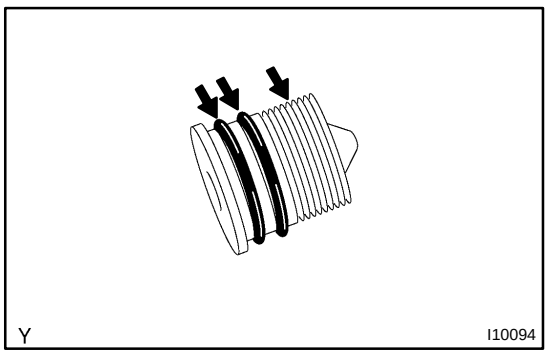

(f) Install the cap to the modulator.

(1) Apply compressor oil to the O-rings and screw part of the cap.

Compressor oil: ND-OIL 8 or equivalent

(2) Using a hexagon wrench (10 mm, 0.39 in.), install the caps.

Torque: 12.3 N·m (125 kgf·cm, 9 ft·lbf)

AC105-03

COMPONENTS

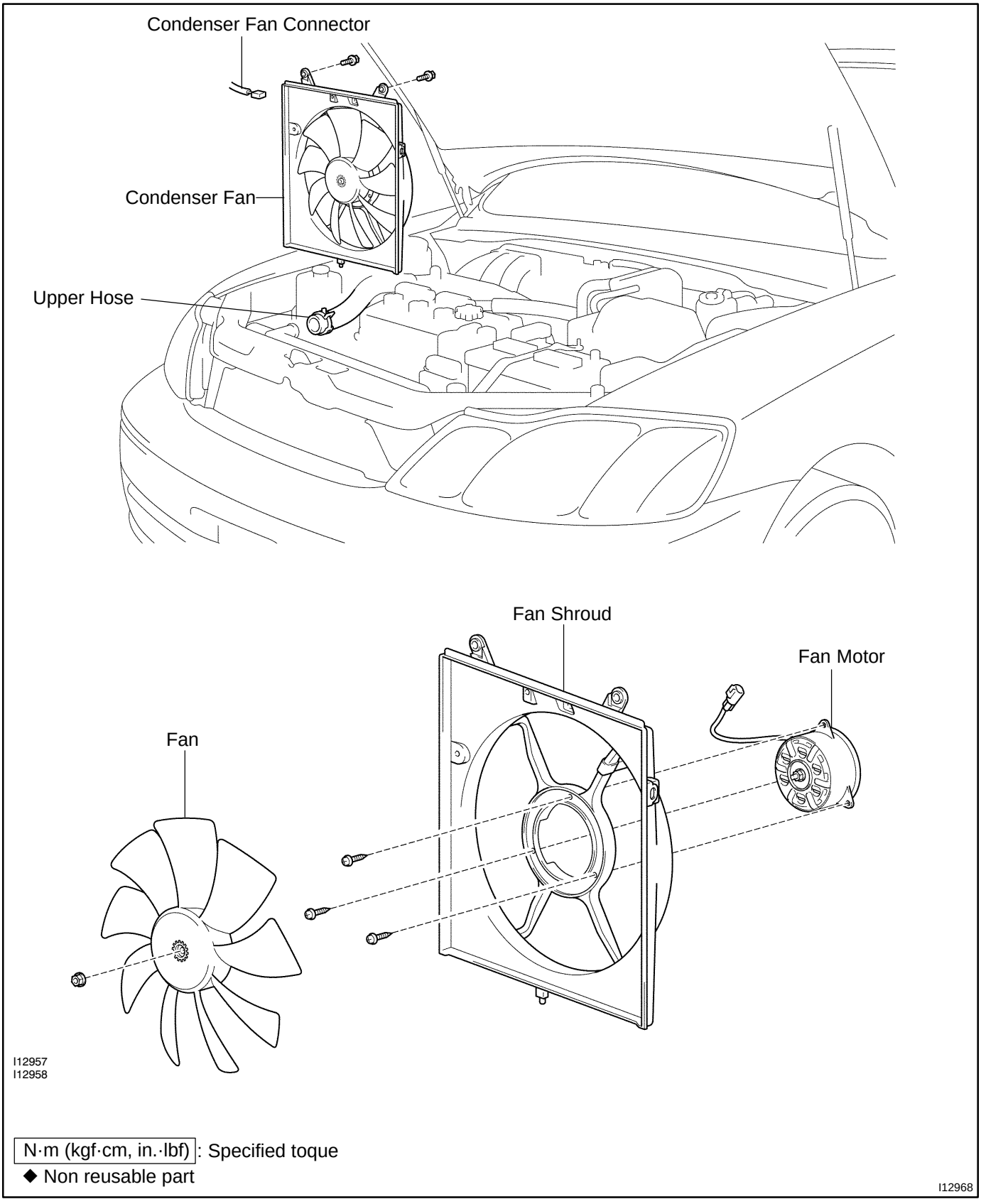

N·m (kgf·cm, in.·lbf): Specified toque

◆ Non reusable part

I12968

CONDENSER FAN

AC104-03

ON-VEHICLE INSPECTION

1. INSPECT CONDENSER FAN OPERATION

Inspect the fan operation at these conditions, as shown in the chart.

Test conditions:

- Start engine
- Blower speed control switch position ”HI”
- Temperature control dial at ”COOL” position
- Set on manifold gauge set
- A/C switch ON

Condition	Fan operation (Fan speed)
Engine coolant temperature 88 ˚C (190 ˚F) or below	Rotate (Low speed)
Engine coolant temperature 98 ˚C (208 ˚F) or above	Rotate (High speed)
Refrigerant pressure is less than 1,520 kPa (15.5 kgf/cm^2, 220 psi)	Rotate (Low speed)
Refrigerant pressure is 1,520 kPa (15.5 kgf/cm^2, 220 psi) or above	Rotate (High speed)

If operation is not as specified, proceed to the next inspection.

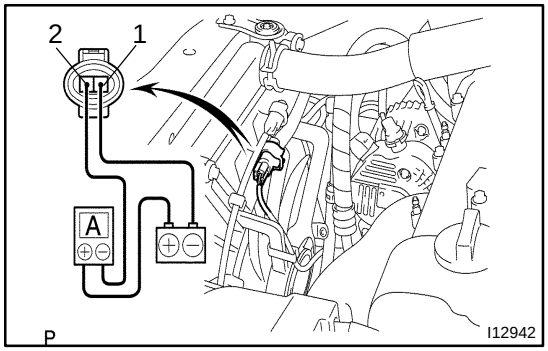

2. INSPECT CONDENSER FAN MOTOR OPERATION

(a) Disconnect the fan connector.
(b) Connect battery and ammeter.
(c) Check that the fan rotates smoothly, and then check the reading on the ammeter.

Specified amperage: 9.2 - 11.0 A at 20 ˚C (68 ˚F)

If operation is not as specified, replace the fan motor.
If operation is as specified, check the pressure switch, cooling fan relays and water temp. switch.

AC2FW-01

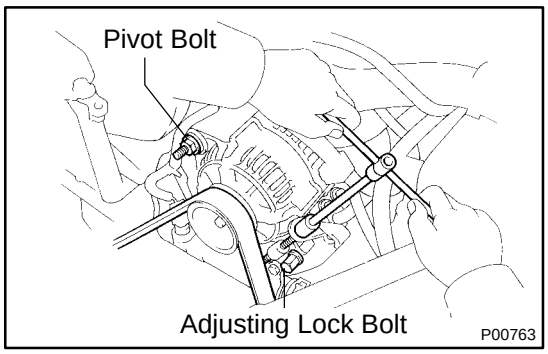

INSTALLATION

INSTALL DRIVE BELT

(a) Install the drive belt.

(b) Apply drive belt tension by adjusting bolt.

Drive belt tension:
New belt: 165 ± 22 lbf
Used belt: 110 ± 22 lbf

(c) Tighten the adjusting lock bolt and pivot bolt.

Torque:
Pivot bolt: 56 N·m (570 kgf·cm, 41 ft·lbf)
Adjusting lock bolt: 18 N·m (185 kgf·cm, 13 ft·lbf)

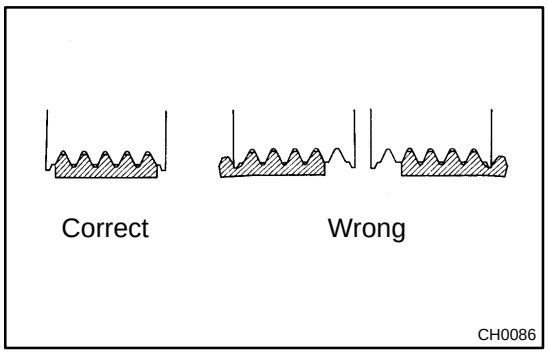

DRIVE BELT

AC0YF-03

ON-VEHICLE INSPECTION

1. INSPECT DRIVE BELT'S INSTALLATION CONDITION

Check that the drive belt fits properly in the ribbed grooves.

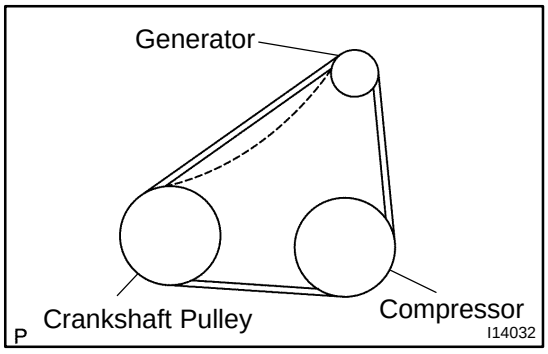

2. INSPECT DRIVE BELT TENSION

Using a belt tension gauge, check the drive belt tension.

Drive belt tension:

New belt: 165 ± 22 lbf

Used belt: 88 ± 22 lbf

HINT:

- "New belt" refers to a belt which has been used less than 5 minutes on the running engine.
- "Used belt" refer to a belt which has been on a running engine for 5 minutes or more.
- After installing the drive belt, check that it fits properly in the ribbed grooves.

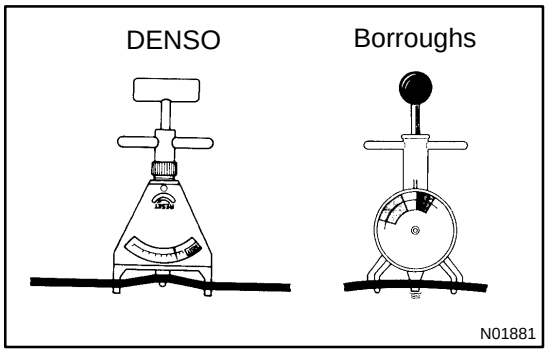

AC0YG-03

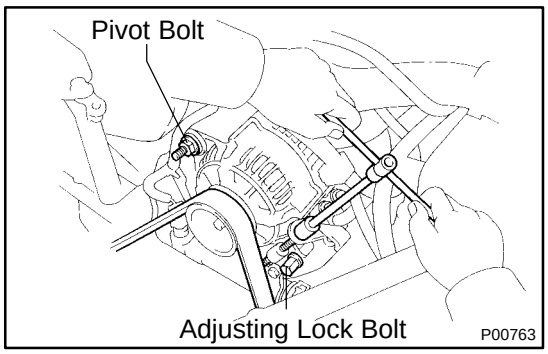

REMOVAL

REMOVE DRIVE BELT

(a) Loosen the pivot bolt and adjusting lock nut.

(b) Loosen the drive belt tension by adjusting bolt and remove the drive belt.

EVAPORATOR TEMPERATURE SENSOR

AC2GG-01

INSPECTION

1. REMOVE EVAPORATOR TEMPERATURE SENSOR

(a) Remove the blower unit (See page AC-37).

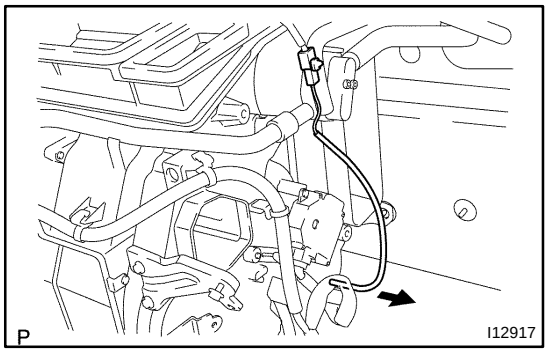

(b) Remove evaporator temperature sensor.
  (1) Disconnect the connector.
  (2) Pull out the sensor.

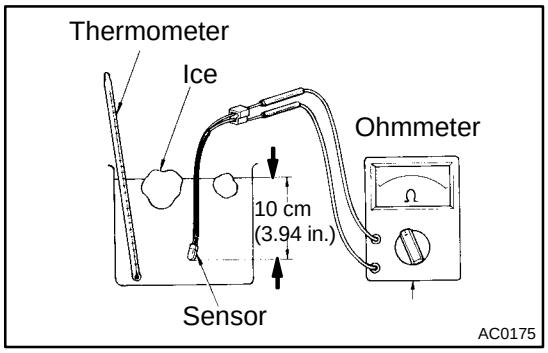

2. INSPECT EVAPORATOR TEMPERATURE SENSOR

Inspect evaporator temperature sensor resistance.
  (1) Place the sensor in cold water, and while changing the temperature of the water, measure resistance at the connector and at the same time, measure temperature of the water with a thermometer.

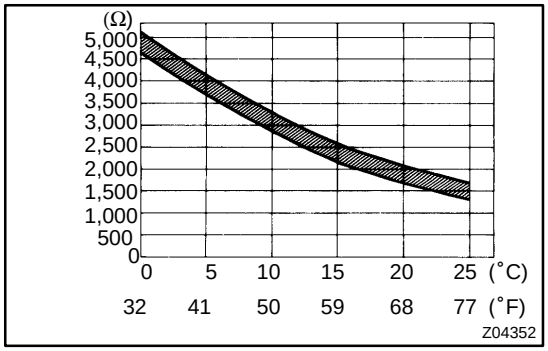

  (2) Compare the 2 readings on the chart.

If resistance value is not as specified, replace the sensor.

3. INSTALL EVAPORATOR TEMPERATURE SENSOR

(a) Install the evaporator temperature sensor.
  (1) Install the sensor.
  (2) Connect the connector.

(b) Install the blower unit. (See page AC-41)

AC2GO-01

COMPONENTS

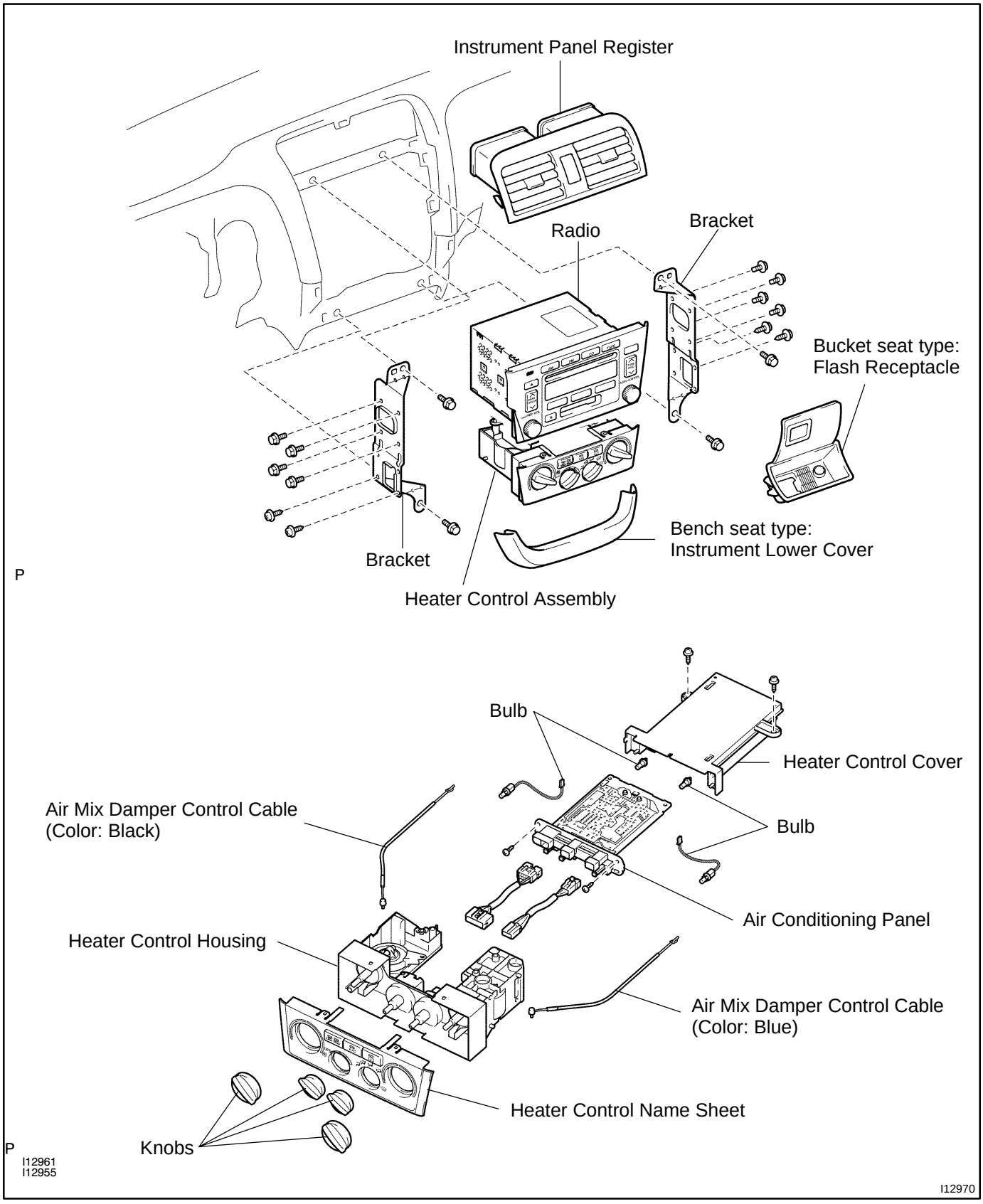

AC2GQ-01

INSPECTION

1. INSPECT ILLUMINATION OPERATION

Connect the positive (+) lead from the battery to terminal 1 and negative (-) lead to terminal 9 then check that the illuminations lights up.

If operation is not as specified, check the faulty bulb.

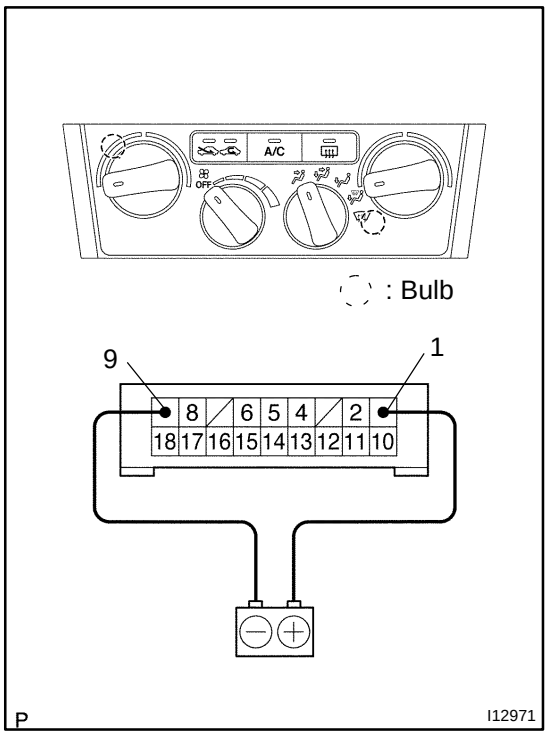

2. INSPECT BULB

Apply the tester as shown in the illustration to the test for continuity.

If continuity exists, replace the heater control.

If no continuity exists, replace the bulb.

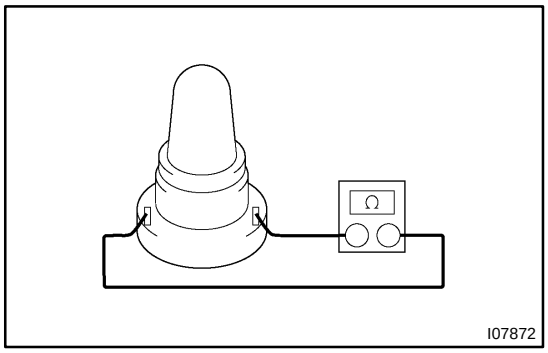

3. INSPECT A/C INDICATOR OPERATION

(a) Connect the positive (+) lead from the battery to terminal 10 and the negative (-) lead to terminal 11.

(b) Push the A/C button in and then check that the indicator lights up.

If operation is not as specified, replace the switch.

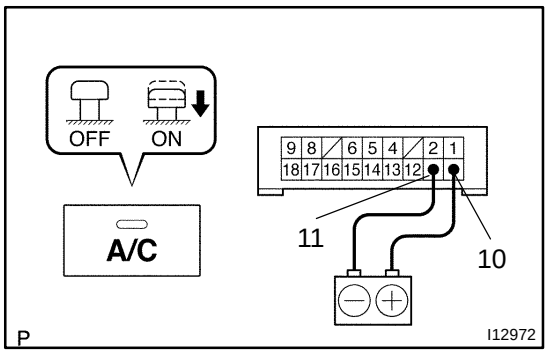

4. INSPECT DIMMING OPERATION

(a) Connect the positive (+) lead from the battery to terminal 10 and the negative (-) lead to terminal 11 while press the switch.

(b) Connect the positive (+) lead from the battery to terminal 1 and then check that the indicator dims.

If operation is not as specified, replace the switch.

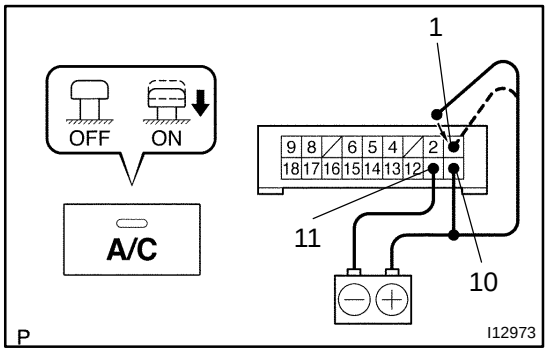

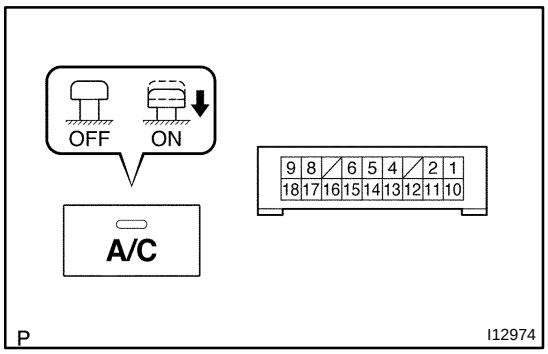

5. INSPECT A/C SWITCH CONTINUITY

Condition / Circuit	Tester connection	Specified condition
OFF	5 - 6	No continuity
ON	5 - 6	Continuity

If operation is not as specified, replace the switch circuit board.

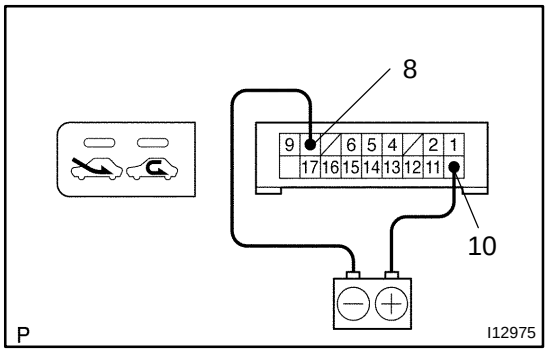

6. INSPECT RECIRC INDICATOR OPERATION

(a) Connect the positive (+) lead from the battery to terminal 10 and the negative (-) lead to terminal 8.

(b) Push the REC button in and then check that the indicator lights up.

If operation is not as specified, replace the switch circuit board.

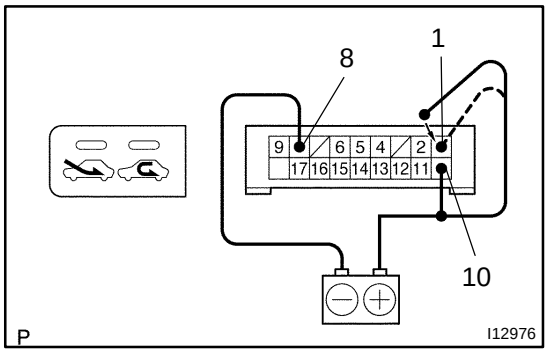

7. INSPECT DIMMING OPERATION

(a) Connect the positive (+) lead from the battery to terminal 10 and the negative (-) lead to terminal 8 while press the switch.

(b) Connect the positive (+) lead from the battery to terminal 4 and then check that the indicator dims.

If operation is not as specified, replace the switch circuit board.

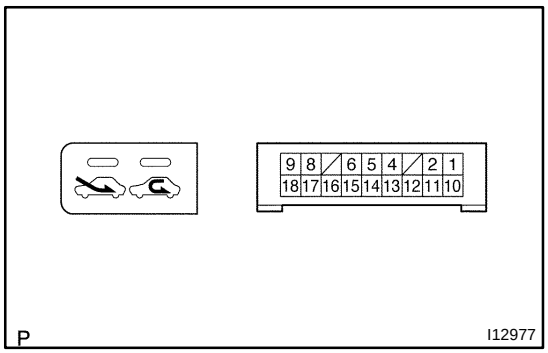

8. INSPECT RECIRC SWITCH CONTINUITY

Condition / Circuit	Tester connection	Specified condition
OFF	18 - 8	No continuity
ON	18 - 8	Continuity

If operation is not as specified, replace the switch circuit board.

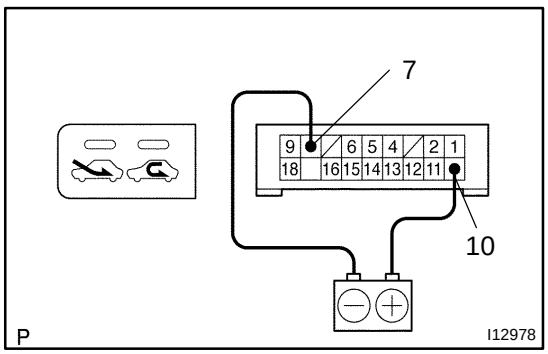

9. INSPECT FRESH INDICATOR OPERATION

(a) Connect the positive (+) lead from the battery to terminal 10 and the negative (-) lead to terminal 8.

(b) Push the FRS button in and then check that the indicator lights up.

If operation is not as specified, replace the switch circuit board.

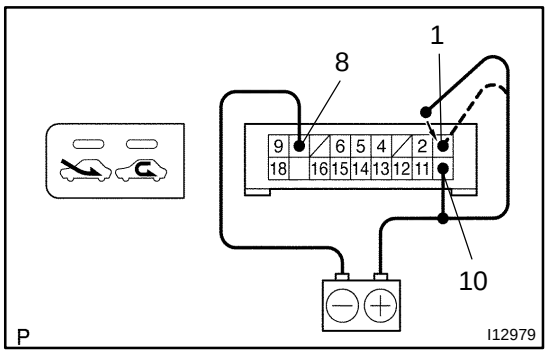

10. INSPECT DIMMING OPERATION

(a) Connect the positive (+) lead from the battery to terminal 10 and the negative (-) lead to terminal 8 while press the switch.

(b) Connect the positive (+) lead from the battery to terminal 1 and then check that the indicator dims.

If operation is not as specified, replace the switch circuit board.

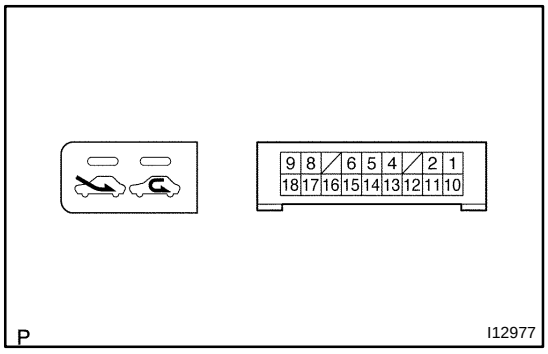

11. INSPECT FRESH SWITCH CONTINUITY

Condition / Circuit	Tester connection	Specified condition
OFF	17 - 8	No continuity
ON	17 - 8	Continuity

If operation is not as specified, replace the switch circuit board.

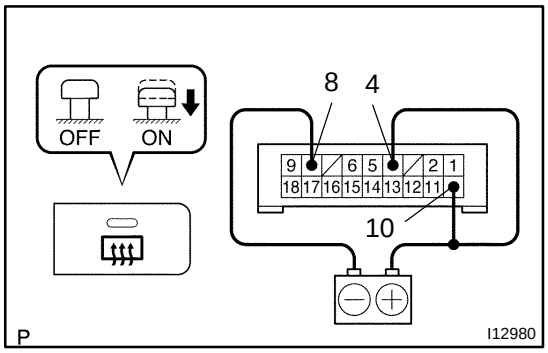

12. INSPECT REAR DEFOGGER INDICATOR OPERATION

(a) Connect the positive (+) lead from the battery to terminal 10, 4 and negative (-) lead to terminal 8.

(b) Push the RDEF button in and then check that the indicator lights up.

If operation is not as specified, replace the switch circuit board.

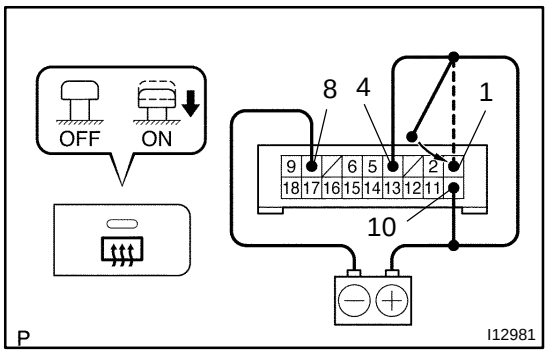

13. INSPECT DIMMING OPERATION

(a) Connect the positive (+) lead from the battery to terminal 10, 4 and negative (-) lead to terminal 8 while press the switch.

(b) Connect the positive (+) lead from the battery to terminal 1 and then check that the indicator dims.

If operation is not as specified, replace the switch circuit board.

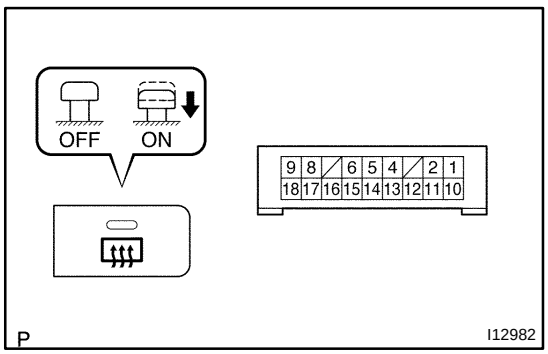

14. INSPECT REAR DEFOGGER SWITCH CONTINUITY

Condition / Circuit	Tester connection	Specified condition
OFF	4 - 8	No continuity
ON	4 - 8	Continuity

If operation is not as specified, replace the switch circuit board.

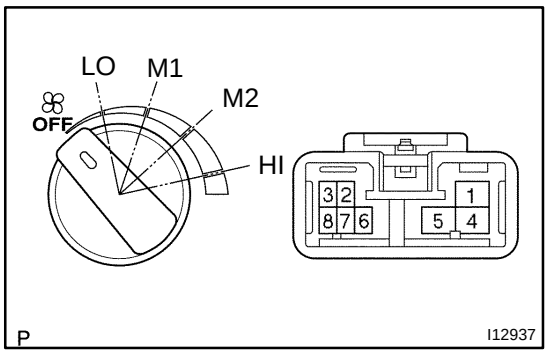

15. INSPECT BLOWER SPEED CONTROL SWITCH CONTINUITY

Condition / Circuit	Tester connection	Specified condition
OFF	-	No continuity
LO	1 - 8	Continuity
M1	1 - 6 - 8	Continuity
M2	1 - 5 - 8	Continuity
HI	1 - 4 - 8	Continuity

If operation is not as specified, replace the switch.

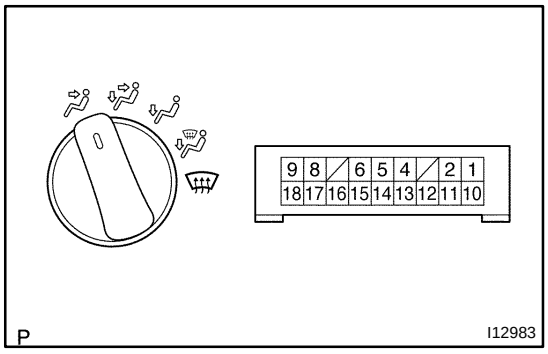

16. INSPECT MODE CONTROL SWITCH CONTINUITY

Condition / Circuit	Tester connection	Specified condition
FACE	12 - 8	Continuity
B/L	13 - 8	Continuity
FOOT	14 - 8	Continuity
FOOT/DEF.	15 - 8	Continuity
DEF.	16 - 8	Continuity

If operation is not as specified, replace the switch.

AC2GR-01

INSTALLATION

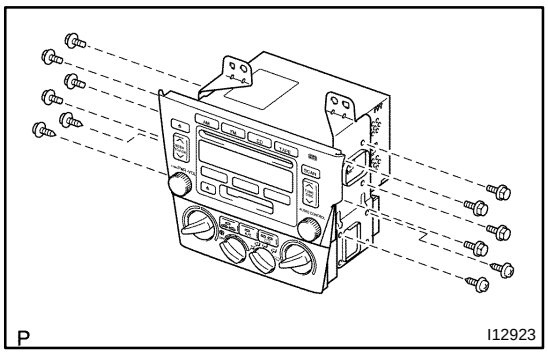

1. INSTALL HEATER CONTROL ASSEMBLY

(a) Install the heater control assembly and stereo opening cover assembly to 2 brackets.

(b) Install the 8 bolts and 4 screws.

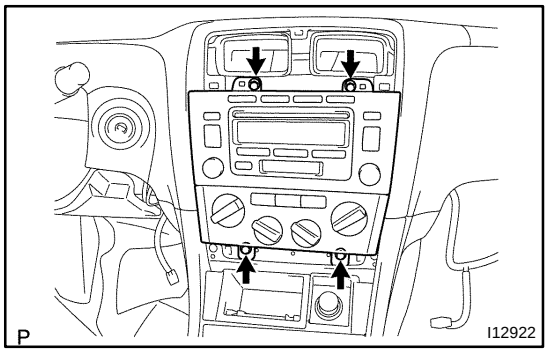

(c) Connect the connectors.

(d) Install the heater control assembly with the 4 bolts.

(e) Pass the through the air mix control cable (Driver side) as shown the illustration.
Driver side cable should be set between driver side brace and A/C unit.

(f) Pass the throught the air mix control cable (Passenger side) as shown the illustration.
Passenger side cable should be set outerside passenger side side brace.

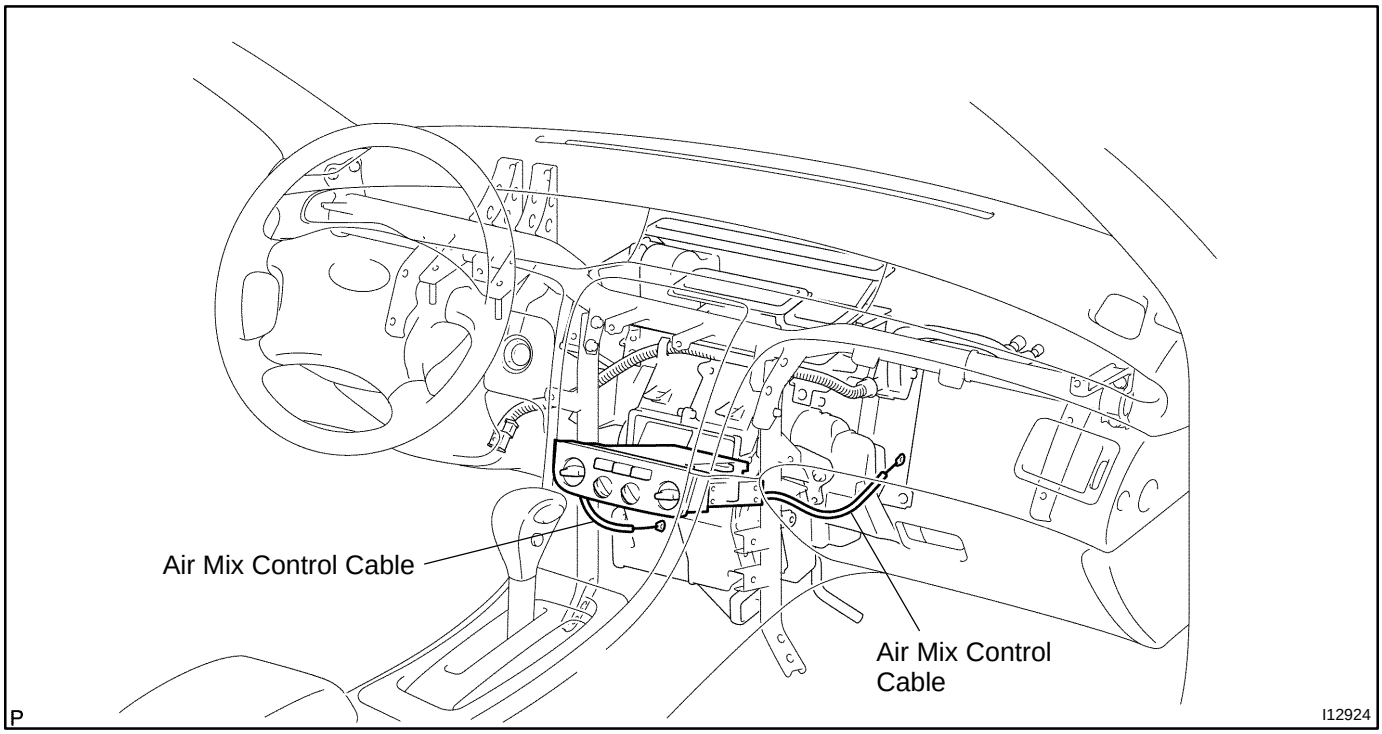

2. CONNECT HEATER CONTROL CABLES

(a) Set the air mix control knobs to ”MAX. COOL” position.

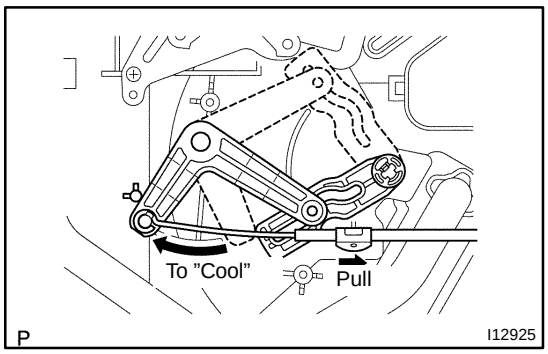

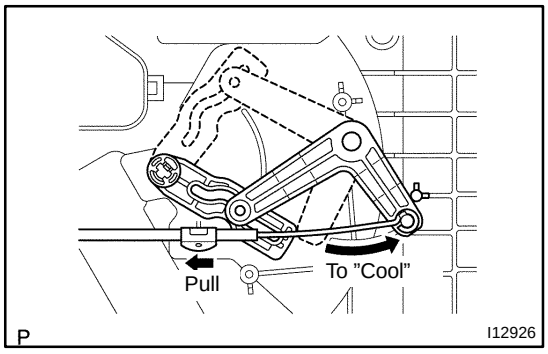

(b) Adjust air mix control cables.
Set the cable connectors to lever pin and clamp the cable outers with keeping the knobs to ”MAX. COOL” position (Both driver side and passenger side).

NOTICE:

- **Don’t bend the cable on setting the cable.**
- **Don’t move the air mix knob before finishing on clamping the cable outer.**

3. INSTALL CENTER CLUSTER FINISH PANEL
(See page BO-97)

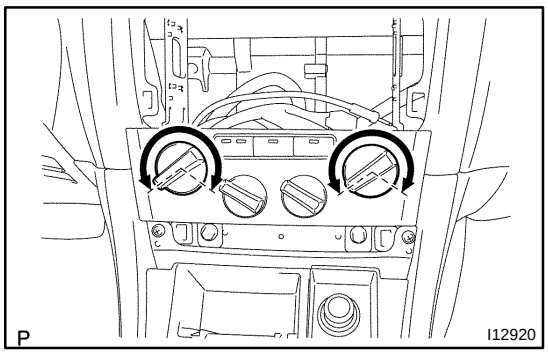

HEATER CONTROL ASSEMBLY (Manual A/C)

AC2GN-01

ON-VEHICLE INSPECTION

INSPECT HEATER CONTROL DIALS OPERATION

Turn the control dials left and right then check that click sound can be heard and recoil is felt.

If click sound can not be heard or recoil is felt, adjust the control cable or check control cable and heater control assembly.

AC2GP-01

REMOVAL

1. REMOVE CENTER CLUSTER FINISH PANEL
(See page BO-90)

2. DISCONNECT HEATER CONTROL CABLES

NOTICE:

When the air mix damper control cable is disconnected, should not bend the cable.

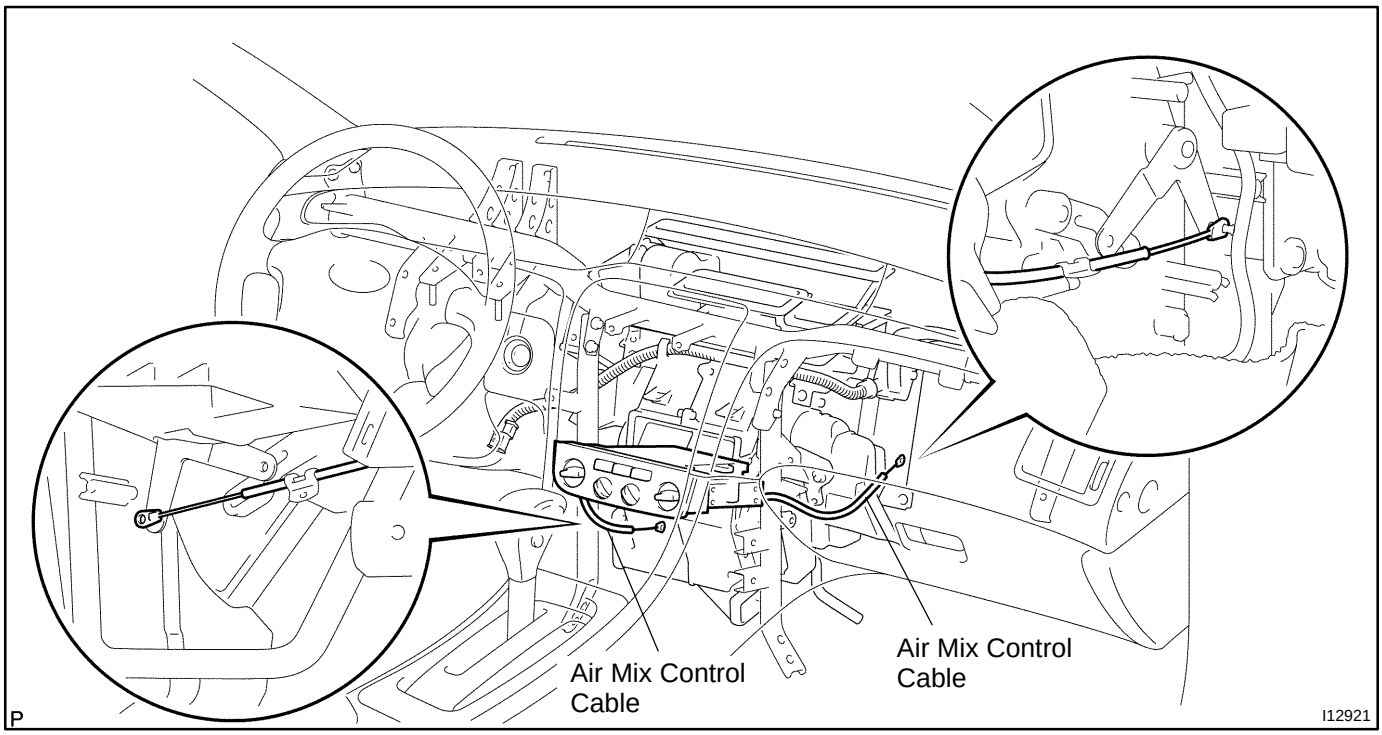

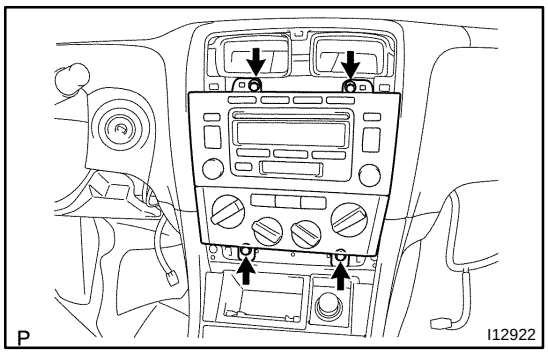

3. REMOVE HEATER CONTROL ASSEMBLY

(a) Remove the 4 bolts and pull out the heater control assembly with stereo opening cover assembly, then disconnect the connectors.

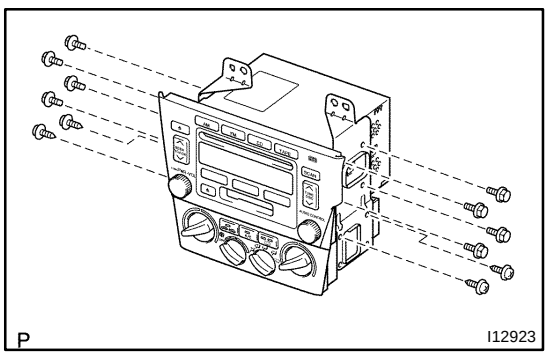

(b) Remove the 8 bolts, 4 screws and 2 brackets.

(c) Separate the heater control assembly and stereo opening cover assembly.

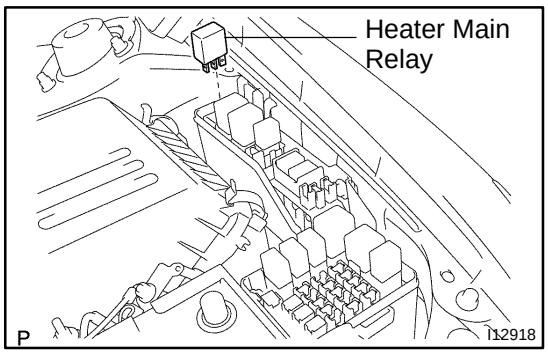

HEATER MAIN RELAY

AC20T-02

INSPECTION

1. REMOVE HEATER MAIN RELAY FROM NO. 2 J/B

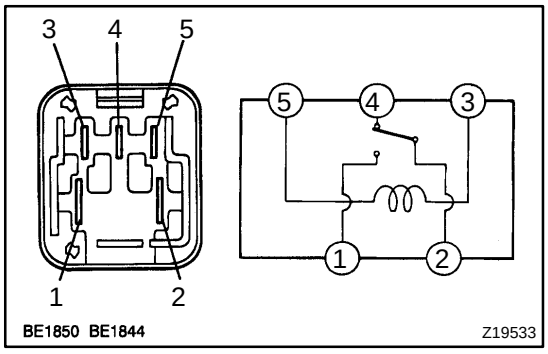

2. INSPECT HEATER MAIN RELAY (Marking: HTR) CONTINUITY

Condition	Tester connection	Specified condition
Constant	2 - 4 3 - 5	Continuity
Apply B+ between terminals 3 and 5.	1 - 2	Continuity

If continuity is not as specified, replace the relay.

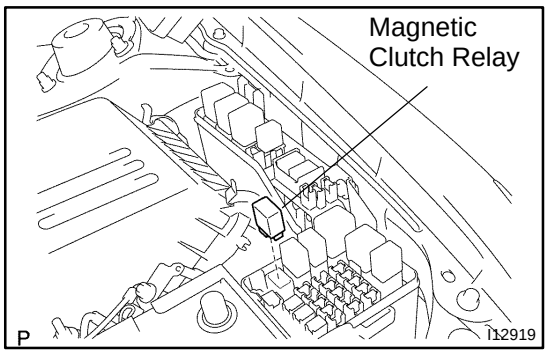

MAGNETIC CLUTCH RELAY

AC20U-03

INSPECTION

1. REMOVE MAGNETIC CLUTCH RELAY FROM NO. 2 J/B

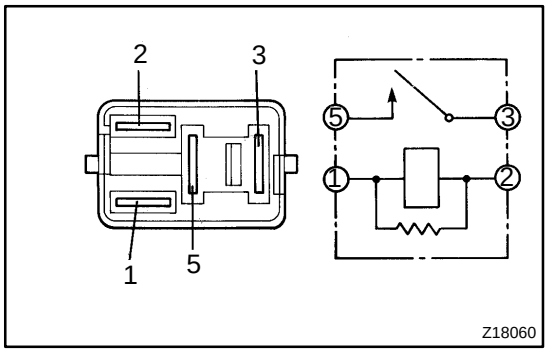

2. INSPECT MAGNETIC CLUTCH RELAY (Marking: MG CLT) CONTINUITY

Condition	Tester connection	Specified condition
Constant	1 - 2	Continuity
Apply B+ between terminals 1 and 2.	3 - 5	Continuity

If continuity is not as specified, replace the relay.

AC0YJ-02

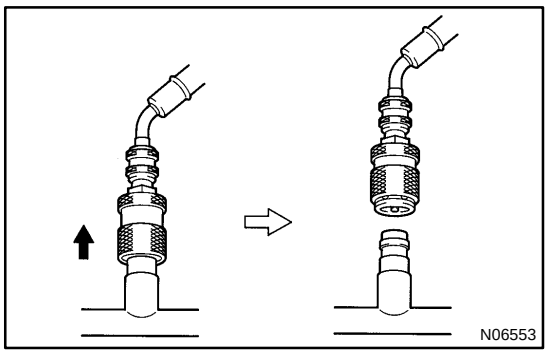

SET OFF

1. **CLOSE BOTH HAND VALVES OF MANIFOLD GAUGE SET**
2. **DISCONNECT QUICK DISCONNECT ADAPTERS FROM SERVICE VALVES ON REFRIGERANT LINE**

HINT:

Slide the sleeve of the quick disconnect adapter upward to unlock the adapter and remove it from the service valve.

3. **INSTALL CAPS TO SERVICE VALVES ON REFRIGERANT LINE**

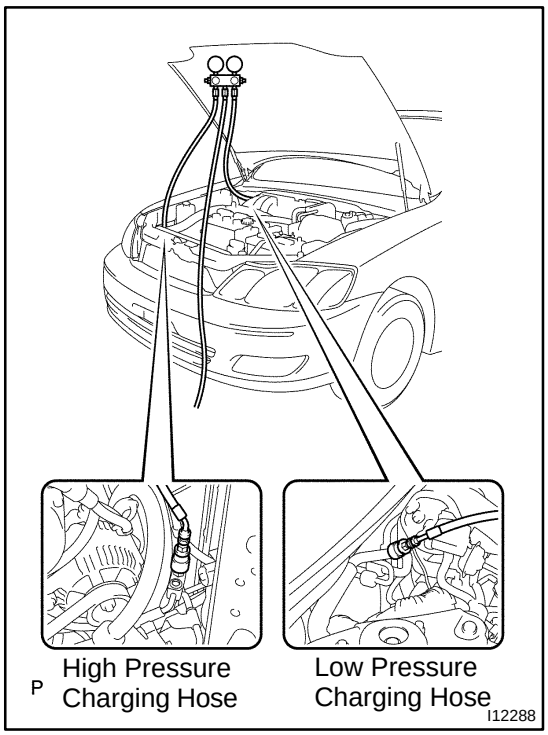

MANIFOLD GAUGE SET

AC0YI-02

SET ON

1. CONNECT CHARGE HOSE TO MANIFOLD GAUGE SET

Tighten the nuts by hand.

CAUTION:

Do not connect the wrong hoses.

2. CONNECT QUICK DISCONNECT ADAPTERS TO CHARGING HOSES

Tighten the nuts by hand.

3. CLOSE BOTH HAND VALVES OF MANIFOLD GAUGE SET

4. REMOVE CAPS FROM SERVICE VALVE ON REFRIGERANT LINE

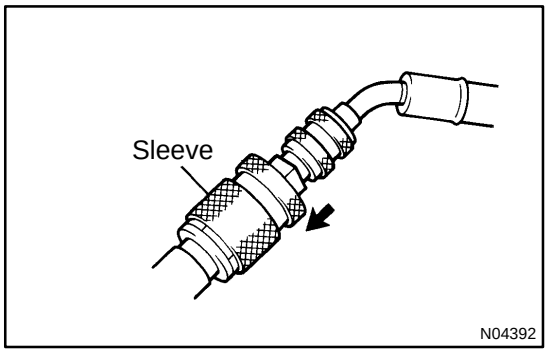

5. CONNECT QUICK DISCONNECT ADAPTER TO SERVICE VALVES

HINT:

Push the quick disconnect adapter onto the service valve, slide, then slide the sleeve of the quick disconnect adapter downward to lock it.

AC102-02

INSTALLATION

Installation is in the reverse order of removal (See page AC-66).

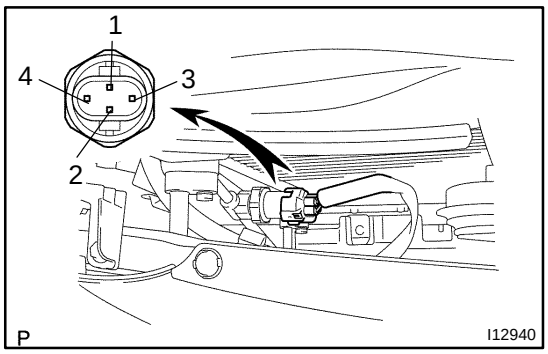

PRESSURE SWITCH

AC100-03

ON-VEHICLE INSPECTION

1. **SET ON MANIFOLD GAUGE SET (See page AC-20)**
2. **DISCONNECT CONNECTOR FROM PRESSURE SWITCH**
3. **RUN ENGINE AT APPROX. 1,500 RPM**

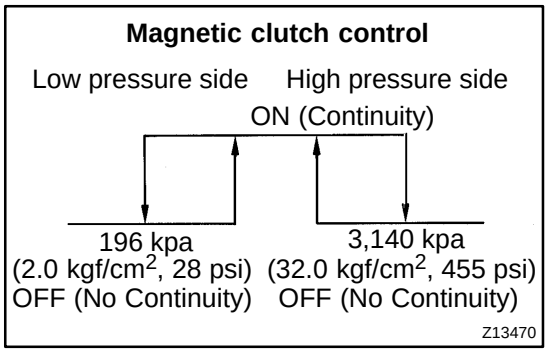

4. **Magnetic clutch control:**
   INSPECT PRESSURE SWITCH OPERATION

(a) Connect the positive (+) lead from the ohmmeter to terminal 4 and the negative (-) lead to terminal 1.

(b) Check continuity between terminals when refrigerant pressure is changed, as shown in the illustration.

If operation is not as specified, replace the pressure switch.

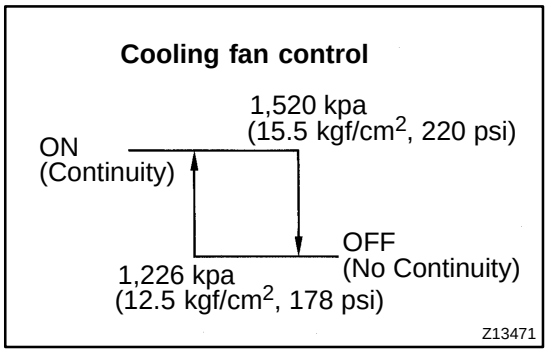

5. **Cooling fan control:**
   INSPECT PRESSURE SWITCH OPERATION

(a) Connect the positive (+) lead from the ohmmeter to terminal 2 and the negative (-) lead to terminal 3.

(b) Check continuity between terminals when refrigerant pressure is changed, as shown in the illustration.

If operation is not as specified, replace the pressure switch.

6. **STOP ENGINE AND SET OFF MANIFOLD GAUGE SET**
7. **CONNECT CONNECTOR TO PRESSURE SWITCH**

AC101-03

REMOVAL

1. DISCHARGE REFRIGERANT FROM REFRIGERATION SYSTEM

HINT:

At the time of installation, please refer to the following item.

Evacuate air from refrigeration system.

Charge system with refrigerant and inspect for leakage of refrigerant.

Specified amount: 600 ± 50 g (21.16 ± 1.76 oz.)

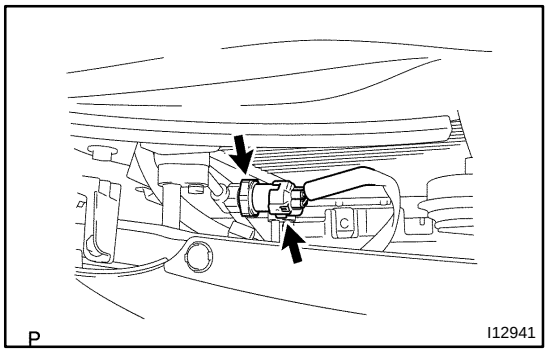

2. REMOVE PRESSURE SWITCH FROM LIQUID TUBE

Disconnect the connector and remove the pressure switch.

Torque: 10 N·m (100 kgf·cm, 7 ft·lbf)

HINT:

- Lock the switch mounted on the tube with an open end wrench, being careful not to deform the tube and remove the switch.
- At the time of installation, please refer to the following item.
  Lubricate a new O-ring with the compressor oil and install them to the switch.

AC102-02

INSTALLATION

Installation is in the reverse order of removal (See page AC-66).

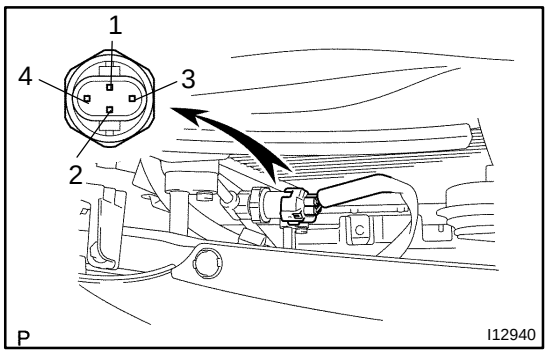

PRESSURE SWITCH

AC100-03

ON-VEHICLE INSPECTION

1. **SET ON MANIFOLD GAUGE SET (See page AC-20)**
2. **DISCONNECT CONNECTOR FROM PRESSURE SWITCH**
3. **RUN ENGINE AT APPROX. 1,500 RPM**

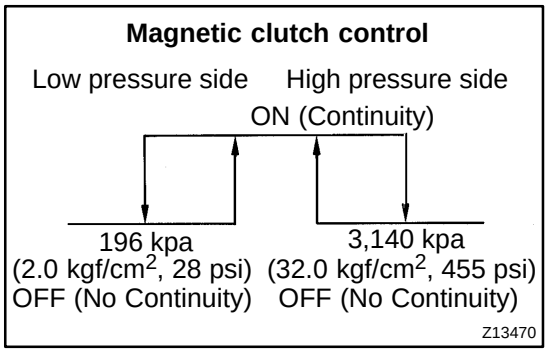

4. **Magnetic clutch control:**
   INSPECT PRESSURE SWITCH OPERATION

(a) Connect the positive (+) lead from the ohmmeter to terminal 4 and the negative (-) lead to terminal 1.

(b) Check continuity between terminals when refrigerant pressure is changed, as shown in the illustration.

If operation is not as specified, replace the pressure switch.

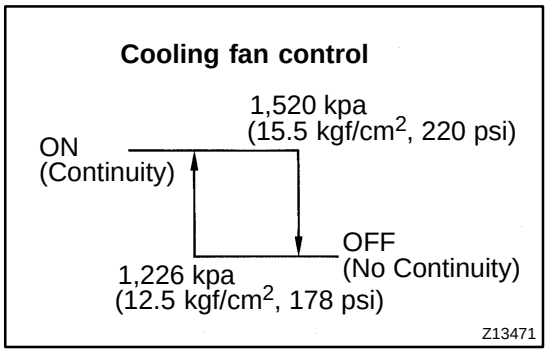

5. **Cooling fan control:**
   INSPECT PRESSURE SWITCH OPERATION

(a) Connect the positive (+) lead from the ohmmeter to terminal 2 and the negative (-) lead to terminal 3.

(b) Check continuity between terminals when refrigerant pressure is changed, as shown in the illustration.

If operation is not as specified, replace the pressure switch.

6. **STOP ENGINE AND SET OFF MANIFOLD GAUGE SET**
7. **CONNECT CONNECTOR TO PRESSURE SWITCH**

AC101-03

REMOVAL

1. DISCHARGE REFRIGERANT FROM REFRIGERATION SYSTEM

HINT:

At the time of installation, please refer to the following item.

Evacuate air from refrigeration system.

Charge system with refrigerant and inspect for leakage of refrigerant.

Specified amount: 600 ± 50 g (21.16 ± 1.76 oz.)

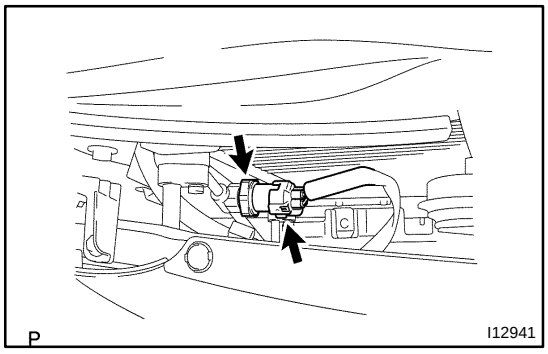

2. REMOVE PRESSURE SWITCH FROM LIQUID TUBE

Disconnect the connector and remove the pressure switch.

Torque: 10 N·m (100 kgf·cm, 7 ft·lbf)

HINT:

- Lock the switch mounted on the tube with an open end wrench, being careful not to deform the tube and remove the switch.
- At the time of installation, please refer to the following item.
  Lubricate a new O-ring with the compressor oil and install them to the switch.

AC0YL-02

LOCATION

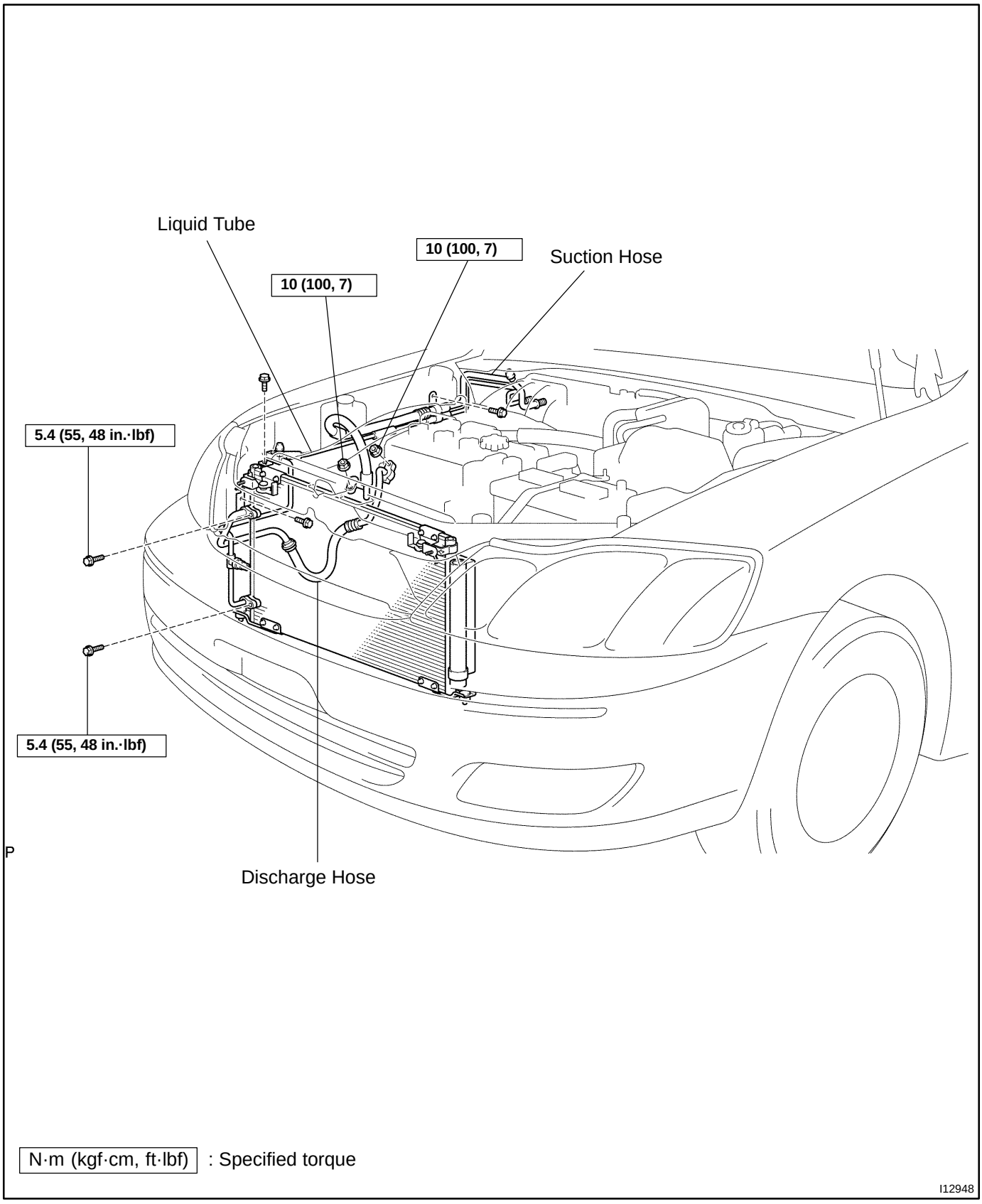

N·m (kgf·cm, ft·lbf) : Specified torque

I12948

REFRIGERANT LINE

AC0YK-01

ON-VEHICLE INSPECTION

1. INSPECTION HOSE AND TUBE CONNECTIONS FOR LOOSENESS

2. INSPECT HOSES AND TUBES FOR LEAKAGE

Using a gas leak detector, check for leakage of refrigerant.

AC0YM-02

REPLACEMENT

1. DISCHARGE REFRIGERANT FROM REFRIGERATION SYSTEM

2. REPLACE FAULTY TUBE OR HOSE

NOTICE:

Cap the open fittings immediately to keep moisture or dirt out of the system.

3. TIGHTEN JOINT OF BOLT OR NUT TO SPECIFIED TORQUE

NOTICE:

Connections should not be torqued tighter than the specified torqued.

Part tightened	N·m	kgf·cm	ft·lbf
Condenser x Discharge hose	5.4	55	48 in.·lbf
Condenser x Liquid tube	5.4	55	48 in.·lbf
Compressor x Discharge hose	10	100	7
Compressor x Suction hose	10	100	7
Expansion valve x Evaporator	5.4	55	48 in.·lbf
Suction line (Block joint)	10	100	7
Liquid line (Block joint)	10	100	7

4. EVACUATE AIR IN REFRIGERATION SYSTEM AND CHARGE SYSTEM WITH REFRIGERANT
Specified amount: 600 ± 50g (21.16 ± 1.76 oz.)

5. INSPECT FOR LEAKAGE OF REFRIGERANT

Using a gas leak detector, check for leakage of refrigerant.

6. INSPECT A/C OPERATION

ROOM TEMPERATURE SENSOR

AC2GE-01

INSPECTION

1. REMOVE ROOM TEMPERATURE SENSOR

(a) Remove the lower No. 1 panel (See page BO-90).

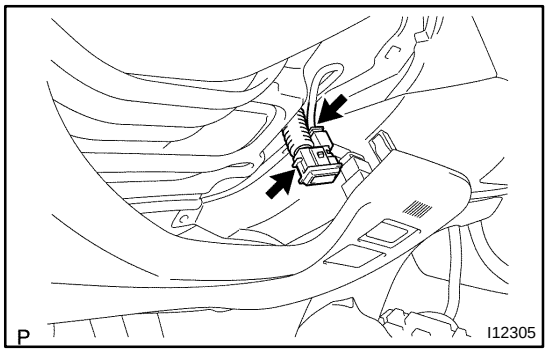

(b) Disconnect the connector.

(c) Remove the sensor from the aspirator hose.

2. INSPECT ROOM TEMPERATURE SENSOR CIRCUIT (See page DI-763)

3. INSTALL ROOM TEMPERATURE SENSOR

(a) Install the sensor to the aspirator hose.

(b) Connect the connector.

(c) Install the lower No. 1 panel (See page BO-97).

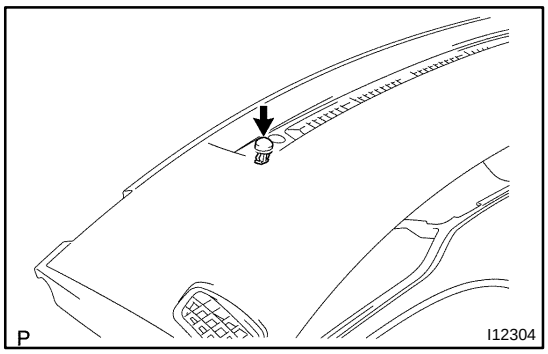

SOLAR SENSOR

AC2GD-01

INSPECTION

1. REMOVE SOLAR SENSOR

Using a screwdriver, pull out the sensor, then disconnect the connector.

HINT:

Tape the screwdriver tip before use.

2. INSPECT SOLAR SENSOR CIRCUIT

(See page DI-784 , DI-775)

3. INSTALL SOLAR SENSOR

Install the solar sensor, then connect the connector.

TROUBLESHOOTING (Manual A/C)

AC2FV-01

PROBLEM SYMPTOMS TABLE

Use the table below to help you find the cause of the problem. The numbers indicate the priority of the likely cause of the problem. Check each part in order If necessary , replace these parts.

Symptom	Suspect Area	See page
No blower operation	2. HTR Fuse	-
	3. Heater main relay	AC-68
	4. Blower motor	AC-56
	5. Blower resistor	AC-57
	6. Blower speed control switch	AC-83
	7. Wire harness	-
No blower control	1. Blower motor	AC-56
	2. Blower resistor	AC-57
	3. Blower speed control switch	AC-83
	4. Wire harness	-
No air temperature control	1. Engine coolant volume	-
	2. Heater control assembly	AC-80
No compressor operation	1. Refrigerant volume	AC-3
	2. A.C Fuse	-
	3. Magnetic clutch	AC-42
	4. Compressor lock sensor	AC-42
	5. Compressor	AC-42
	6. Pressure switch	AC-65
	7. Heater main relay	AC-68
	8. Blower speed control switch	AC-83
	9. A/C switch	AC-83
	10.A/C amplifier	AC-77
	11.Evaporator temp. sensor	AC-64
	12.Wire harness	-
No cool air comes out	1. Refrigerant volume	AC-3
	2. Refrigerant pressure	AC-3
	3. Drive belt	AC-17
	4. Magnetic clutch	AC-42
	5. Compressor lock sensor	AC-42
	6. Pressure switch	AC-65
	7. Evaporator temp. sensor	AC-64
	8. A/C switch	AC-83
	9. A/C amplifier	AC-77
	10.Heater control assembly	AC-80
	11.Wire harness	-
No engine idle-up when A/C switch ON	1. A/C amplifier	AC-77
	2. Idle control system	DI-102
	3. Wire harness	-
No air inlet control	1. Air inlet servomotor	AC-39
	2. Heater control assembly	AC-80
	3. Wire harness	-
No mode control	1. Air outlet servomotor	AC-60
	2. Heater control assembly	AC-80
	3. Wire harness	-

Blinking of A/C indicator	1. Compressor 2. Drive belt 3. Compressor lock sensor 4. A/C amplifier	AC-42 AC-17 AC-42 AC-77
Brightness does not change when light control switch is turned	1. Headlight and taillight system 2. Heater control assembly	BE-19 AC-80

AX03M-04

OPERATION

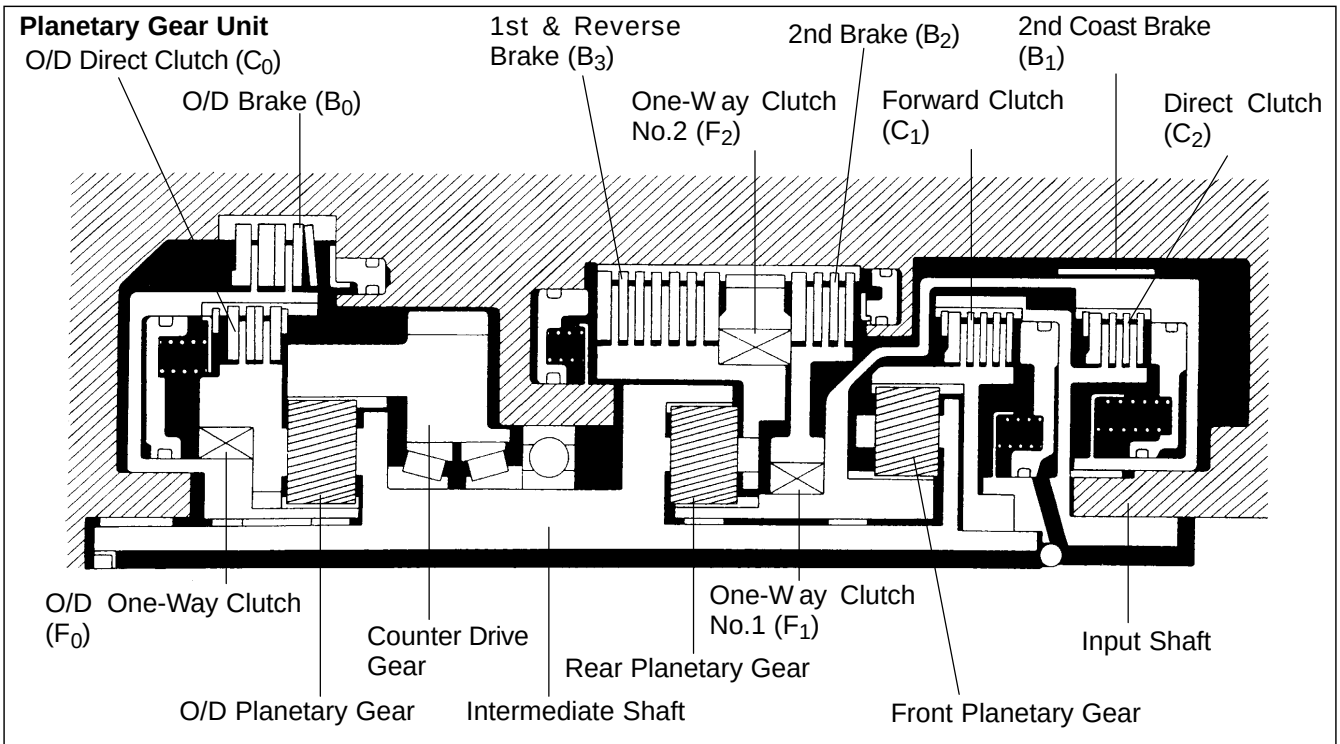

Shift Lever Position	Gear Position	C_0	C_1	C_2	B_0	B_1	B_2	B_3	F_0	F_1	F_2
P	Parking	○									
R	Reverse	○		○				○			
N	Neutral	○									
D	1st	○	○						○		○
	2nd	○	○				○		○	○	
	3rd	○	○	○			○		○		
	O/D		○	○	○		○				
2	1st	○	○						○		○
	2nd	○	○			○	○		○	○	
	*3rd	○	○	○			○		○		
L	1st	○	○					○	○		○
	*2nd	○	○			○	○		○	○	

*Down-shift only - no up-shift

○ : Operating

D01018

AUTOMATIC TRANSAXLE SYSTEM

AX03L-02

PRECAUTION

If the vehicle is equipped with a mobile communication system, refer to the precautions in the IN section.

AUTOMATIC TRANSAXLE UNIT

COMPONENTS

AX03X-05

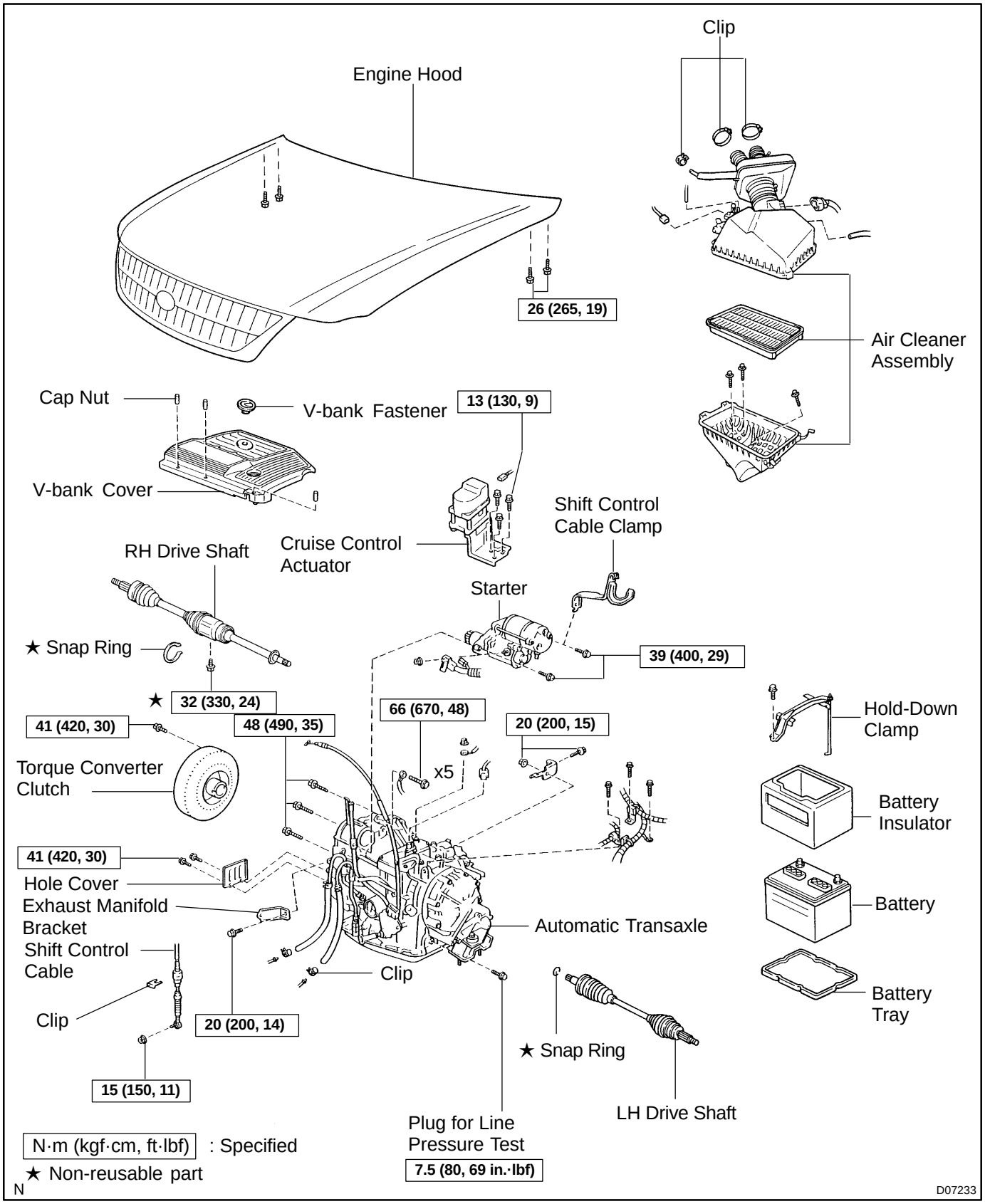

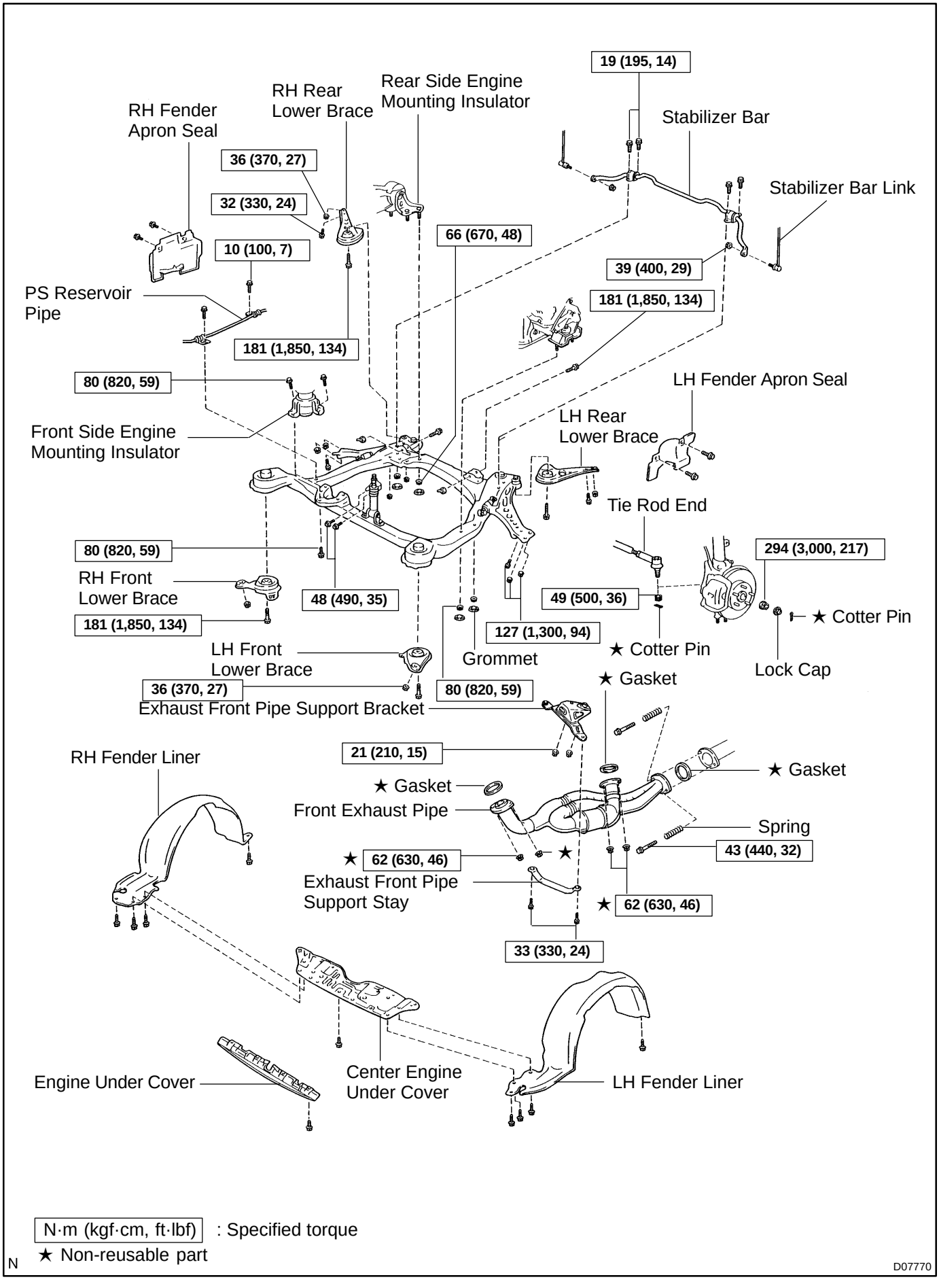
19 (195, 14)
RH Rear Lower Brace
Rear Side Engine Mounting Insulator
RH Fender Apron Seal
Stabilizer Bar
36 (370, 27)
32 (330, 24)
Stabilizer Bar Link
66 (670, 48)
10 (100, 7)
39 (400, 29)
PS Reservoir Pipe
181 (1,850, 134)
181 (1,850, 134)
80 (820, 59)
LH Fender Apron Seal
Front Side Engine Mounting Insulator
LH Rear Lower Brace
Tie Rod End
80 (820, 59)
294 (3,000, 217)
RH Front Lower Brace
48 (490, 35)
49 (500, 36)
★ Cotter Pin
181 (1,850, 134)
127 (1,300, 94)
★ Cotter Pin
LH Front Lower Brace
Grommet
Lock Cap
★ Gasket
36 (370, 27)
80 (820, 59)
Exhaust Front Pipe Support Bracket
21 (210, 15)
RH Fender Liner
★ Gasket
★ Gasket
Front Exhaust Pipe
Spring
★ 62 (630, 46)
★
43 (440, 32)
Exhaust Front Pipe Support Stay
★ 62 (630, 46)
33 (330, 24)
Engine Under Cover
Center Engine Under Cover
LH Fender Liner
N·m (kgf·cm, ft·lbf) : Specified torque
★ Non-reusable part
N
D07770

AX03Z-05

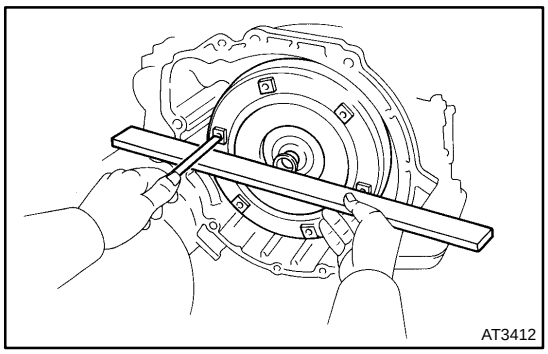

INSTALLATION

1. CHECK TORQUE CONVERTER CLUTCH INSTALLATION

Using a scale and a straight edge, measure the distance from the installed surface to the transaxle housing.

Correct distance: 13.7 mm (0.539 in.) or more

2. TRANSAXLE INSTALLATION

Installation is in the reverse order of removal (See page AX-35).

HINT:

After installation, check and inspect the following items.

★ Fill ATF and check fluid level (See page DI-160).
★ Check front wheel alignment (See page SA-4).
★ Do the road test (See page DI-160).
★ Adjust the hood (See page BO-6).

NOTICE:

w/ VSC:

After installation, perform the steering angle sensor zero point calibration (See page DI-252).

AX0KA-01

REMOVAL

1. REMOVE ENGINE HOOD
Torque: 26 N·m (265 kgf·cm, 19 ft·lbf)

2. REMOVE BATTERY

3. REMOVE AIR CLEANER ASSEMBLY

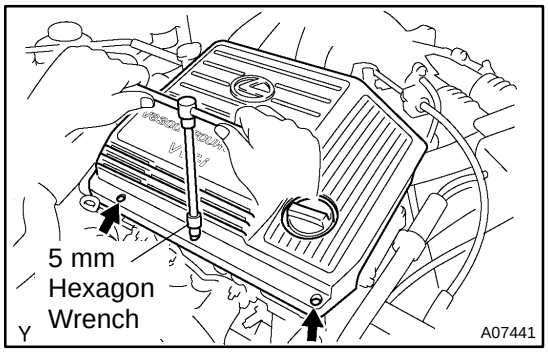

4. REMOVE V-BANK COVER

(a) Using a 5 mm hexagon wrench, remove the 3 cap nuts.

(b) Turn the V-bank cover fastener counterclockwise and loosen it.

(c) Remove the V-bank cover.

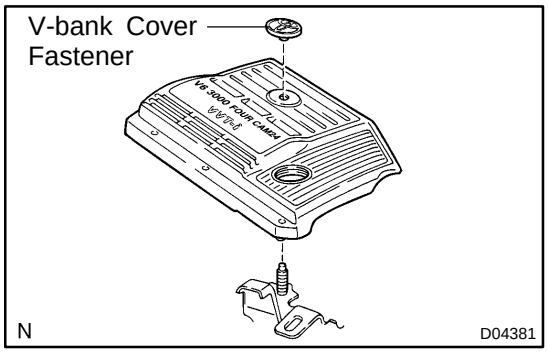

HINT:
At the time of installation, please refer to the following item.
When installing the V-bank cover fastener, remove the fastener once, then position and push in it.

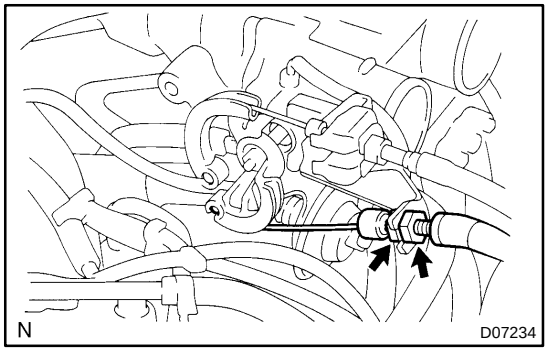

5. REMOVE THROTTLE CABLE FROM THROTTLE BODY
Torque: 15 N·m (150 kgf·cm, 11 ft·lbf)

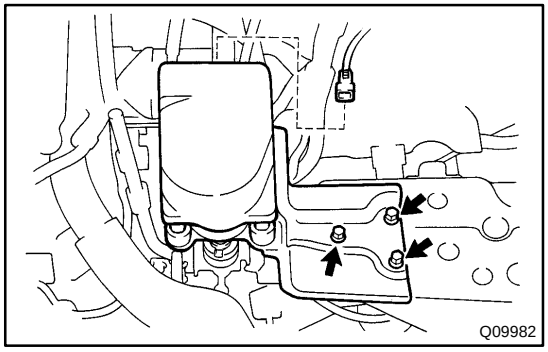

6. REMOVE CRUISE CONTROL ACTUATOR

(a) Disconnect the connector.

(b) Remove the 3 bolts and disconnect cruise control actuator with the bracket.
Torque: 13 N·m (130 kgf·cm, 9 ft·lbf)

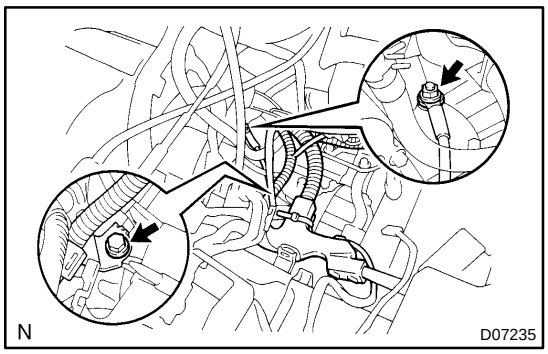

7. DISCONNECT GROUND CABLE

8. SEPARATE WIRE HARNESS FROM AUTOMATIC TRANSAXLE

Remove the bolt and separate the wire harness.

9. DISCONNECT DIRECT CLUTCH SPEED SENSOR CONNECTOR

10. DISCONNECT PARK/NEUTRAL POSITION SWITCH CONNECTOR

11. DISCONNECT SOLENOID CONNECTOR

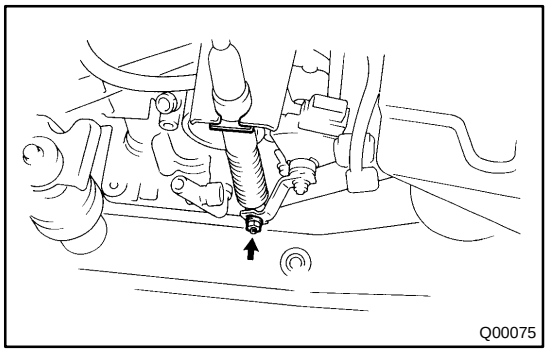

12. DISCONNECT SHIFT CONTROL CABLE

(a) Remove the nut and disconnect the shift control cable from the control shaft lever.
Torque: 15 N·m (150 kgf·cm, 11 ft·lbf)

(b) Remove the clip and disconnect the shift control cable from the bracket.

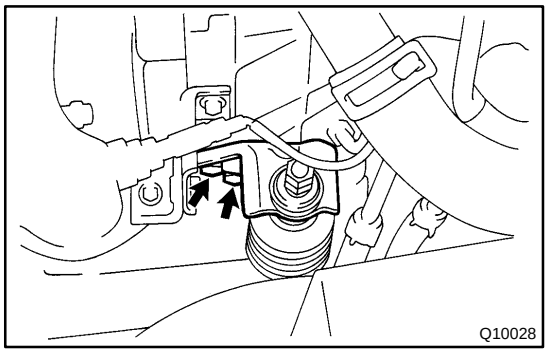

13. REMOVE 2 ENGINE MOUNTING ABSORBER BOLTS
Torque: 48 N·m (490 kgf·cm, 35 ft·lbf)

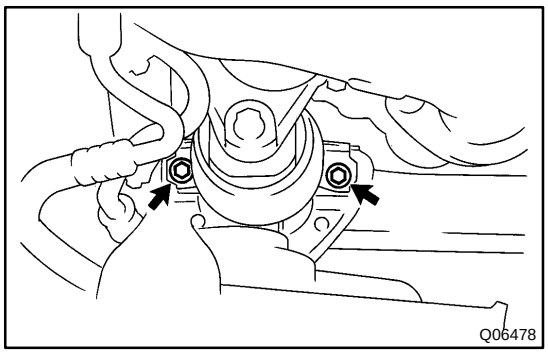

14. REMOVE 2 FRONT SIDE ENGINE MOUNTING BOLTS
Torque: 44 N·m (440 kgf·cm, 32 ft·lbf)

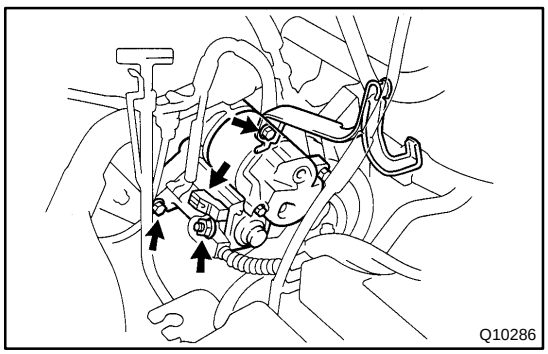

15. REMOVE STARTER AND SHIFT CONTROL CABLE CLAMP

(a) Disconnect the connector.

(b) Remove the nut and disconnect the terminal.

(c) Remove the 2 bolts, starter and shift control cable clamp.
Torque: 39 N·m (400 kgf·cm, 29 ft·lbf)

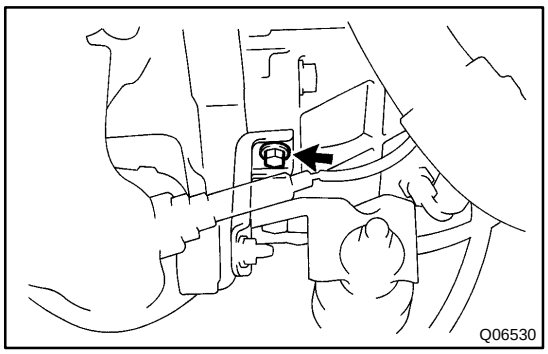

16. REMOVE EXHAUST MANIFOLD BRACKET MOUNTING BOLT
Torque: 34 N·m (350 kgf·cm, 25 ft·lbf)



17. REMOVE 5 TRANSAXLE-TO-ENGINE BOLTS AND DISCONNECT GROUND TERMINAL
Torque: 66 N·m (670 kgf·cm, 48 ft·lbf)

18. RAISE AND SUPPORT VEHICLE SECURELY

19. REMOVE LH AND RH FRONT WHEELS
Torque: 103 N·m (1,050 kgf·cm, 76 ft·lbf)

20. REMOVE DIFFERENTIAL FLUID DRAIN PLUG AND GASKET
Torque: 49 N·m (500 kgf·cm, 36 ft·lbf)

HINT:
At the time of installation, please refer to the following item.
Replace the used gasket with a new gasket.

21. DRAIN DIFFERENTIAL FLUID

22. REMOVE LH AND RH FRONT DRIVE SHAFTS (See page SA-16)

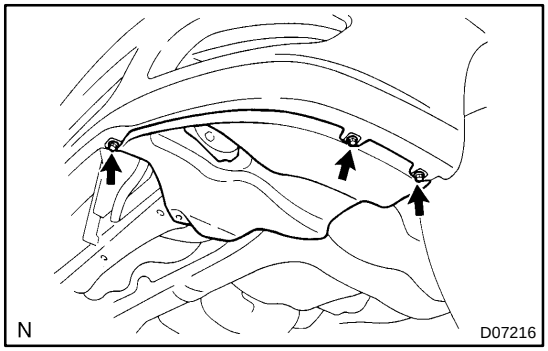

23. REMOVE ENGINE UNDER COVER

(a) Remove the 6 screws and turn over the front side of the LH and RH fender liners.

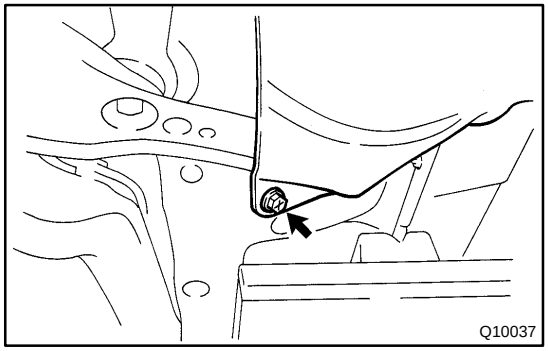

(b) Remove the 2 screws and turn over the rear side of LH and RH fender liners.

(c) Remove the engine under cover.

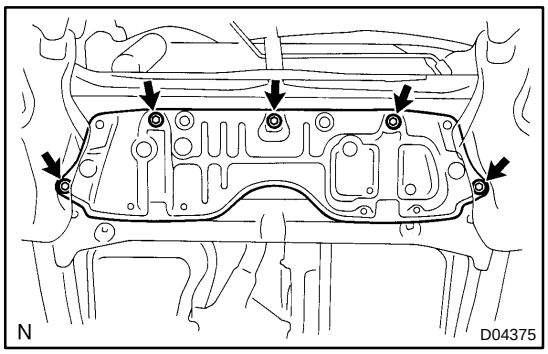

(d) Remove the 5 bolts and center engine under cover.

24. REMOVE EXHAUST FRONT PIPE (See page EM-1 10)

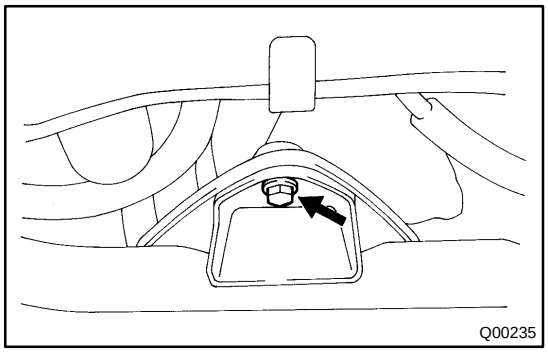

25. REMOVE FRONT SIDE ENGINE MOUNTING INSULATOR BOLT

Torque: 44 N·m (440 kgf·cm, 32 ft·lbf)

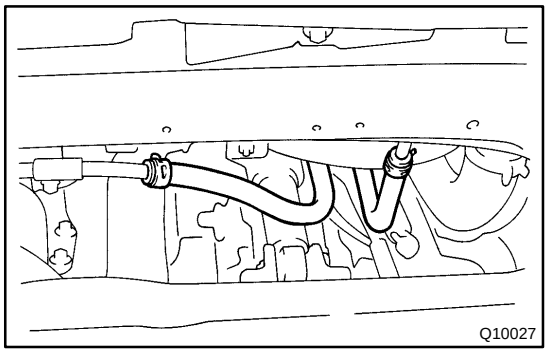

26. DISCONNECT OIL COOLER HOSE

Loosen the 2 clip and disconnect the 2 oil cooler hoses.

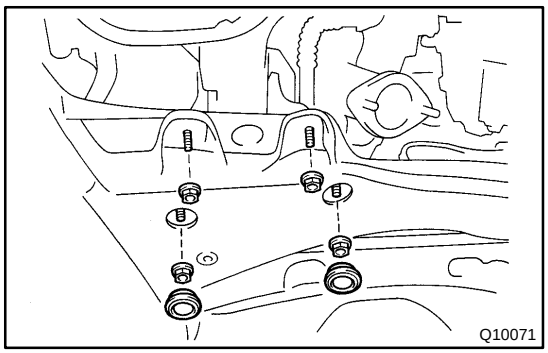

27. REMOVE REAR SIDE ENGINE MOUNTING NUT

(a) Remove the 2 grommets.

(b) Remove the 4 nuts.

Torque: 66 N·m (670 kgf·cm, 48 ft·lbf)

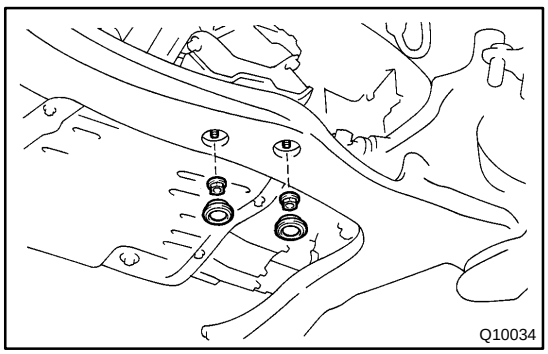

28. REMOVE LEFT SIDE TRANSAXLE MOUNTING NUT

(a) Remove the 2 grommets.

(b) Remove the 2 nuts.

Torque: 80 N·m (820 kgf·cm, 59 ft·lbf)

29. REMOVE FRONT STABILIZER BAR

(a) Remove the 4 bolts, LH and RH stabilizer bar brackets and bushings.

Torque: 19 N·m (195 kgf·cm, 14 ft·lbf)

(b) Remove the front stabilizer bar (See page SA-41).

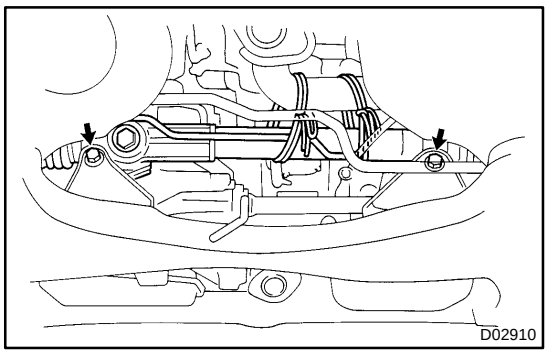

30. TIE STEERING GEAR ASSEMBLY WITH CODE OR EQUIVALENT TO SUSPEND ASSEMBLY SECURELY, AS SHOWN

31. REMOVE 2 STEERING GEAR ASSEMBLY MOUNTING BOLTS

Torque: 181 N·m (1,850 kgf·cm, 134 ft·lbf)

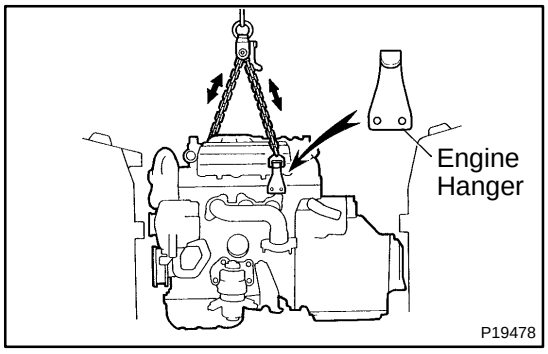

32. ATTACH ENGINE SLING DEVICE TO ENGINE HANGERS

(a) Install the No.2 engine hangers in the correct direction.

Part No.:

No.2 engine hanger: 12282-20020

Bolt: 91621-60822

Torque: 20 N·m (200 kgf·cm, 14 ft·lbf)

(b) Attach the engine chain hoist to the engine hangers.

CAUTION:

Do not attempt to hang the engine by hooking the chain to any other part.

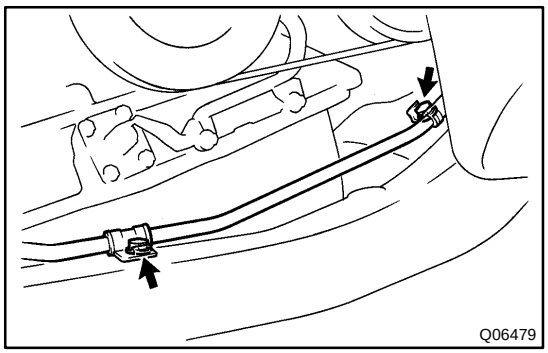

33. REMOVE FRONT FRAME ASSEMBLY

(a) Remove the 2 bolts and PS reservoir pipe mounting brackets.

Torque: 10 N·m (100 kgf·cm, 7 ft·lbf)

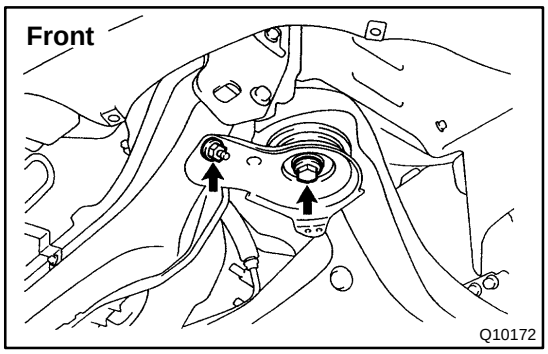

(b) Remove the 6 bolts, 4 nuts, 4 lower brace and front frame assembly.

Torque:
19 mm head bolt: 181 N·m (1,850 kgf·cm, 134 ft·lbf)
14 mm head bolt: 32 N·m (330 kgf·cm, 24 ft·lbf)
Nut: 36 N·m (370 kgf·cm, 27 ft·lbf)

34. SUPPORT TRANSAXLE WITH A JACK

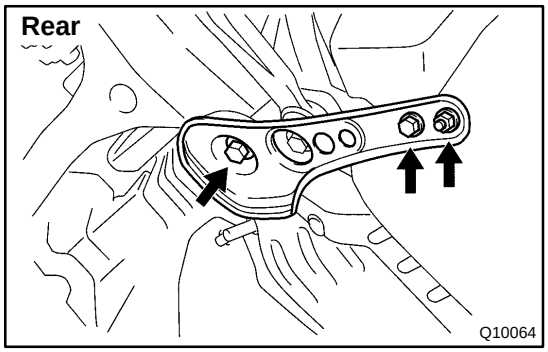

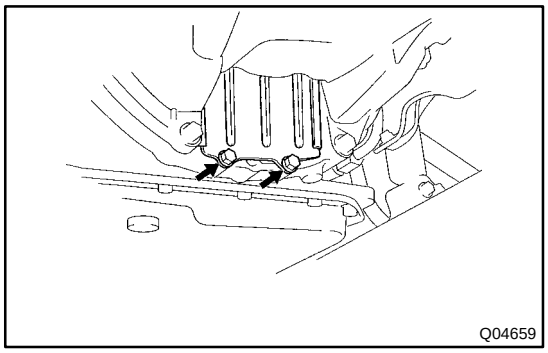

35. REMOVE TORQUE CONVERTER CLUTCH MOUNTING BOLT

(a) Remove the 2 bolts and hole cover.

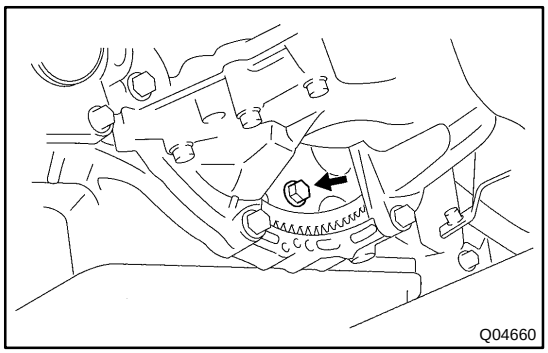

(b) Turn the crankshaft to gain access to each bolt, remove the 6 bolts while holding the crankshaft pulley bolt with a wrench.

Torque: 41 N·m (420 kgf·cm, 30 ft·lbf)

HINT:
At the time of installation, please refer to the following item.
First install black colored bolt and then the 5 other bolts.

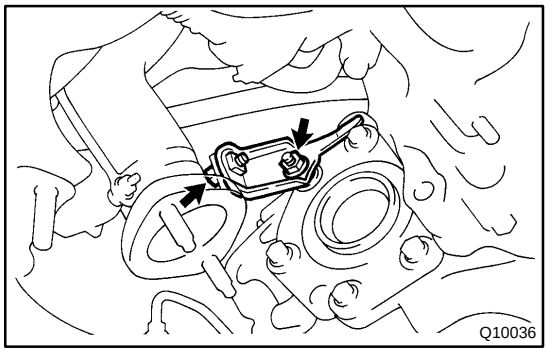

36. REMOVE EXHAUST MANIFOLD PLATE

Remove the bolt, nut and exhaust manifold plate.

Torque: 34 N·m (350 kgf·cm, 25 ft·lbf)

Left and lower

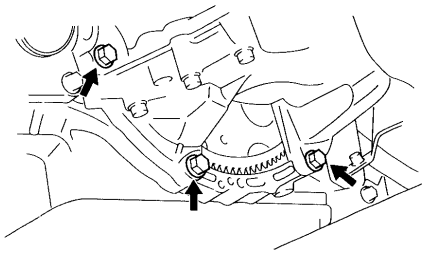

Z14284

37. REMOVE 3 LOWER TRANSAXLE-TO-ENGINE BOLTS

Torque: 48 N·m (490 kgf·cm, 35 ft·lbf)

38. REMOVE TRANSAXLE ASSEMBLY

Separate the transaxle from the engine, and lower the transaxle.

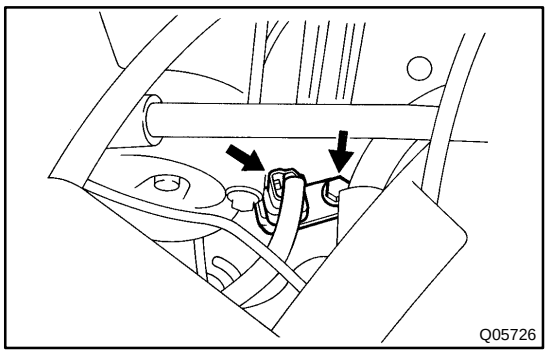
Q05726

DIRECT CLUTCH SPEED SENSOR

AX03O-04

ON-VEHICLE REPAIR

1. REMOVE AIR CLEANER ASSEMBLY

2. DISCONNECT DIRECT CLUTCH SPEED SENSOR CONNECTOR

3. REMOVE DIRECT CLUTCH SPEED SENSOR

(a) Remove the bolt and direct clutch speed sensor.

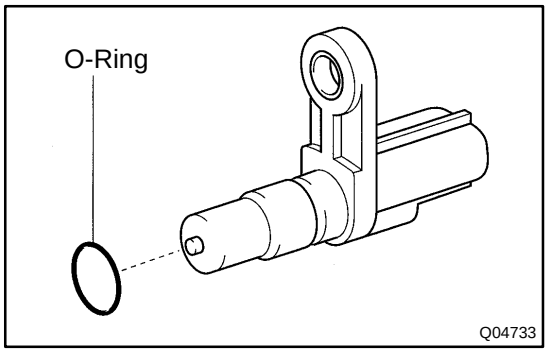

Q04733

(b) Remove the O-ring from the direct clutch speed sensor.

4. INSTALL DIRECT CLUTCH SPEED SENSOR

(a) Coat a new O-ring with ATF and install it to the direct clutch speed sensor.

(b) Install the direct clutch speed sensor with the bolt.
Torque: 11 N·m (110 kgf·cm, 8 ft·lbf)

5. CONNECT DIRECT CLUTCH SPEED SENSOR CONNECTOR

6. INSTALL AIR CLEANER ASSEMBLY

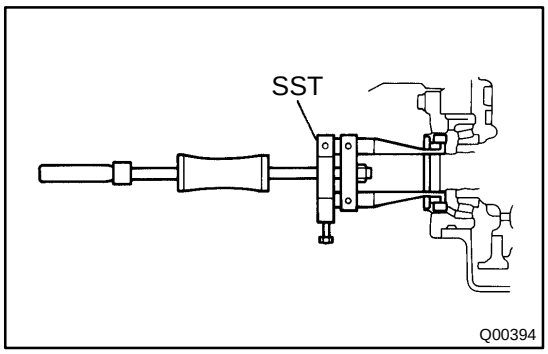

DIFFERENTIAL OIL SEAL

AX03S-05

ON-VEHICLE REPAIR

1. REMOVE FRONT DRIVE SHAFT

(See page SA-16)

2. REMOVE SIDE GEAR SHAFT OIL SEAL

Using SST, pull out the oil seal.

SST 09308-00010

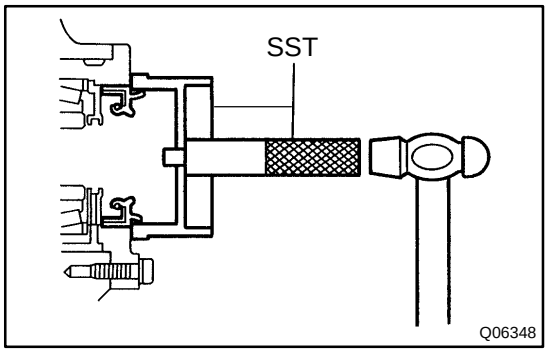

3. INSTALL LEFT SIDE GEAR SHAFT OIL SEAL

(a) Using SST and a hammer, drive in a new oil seal.

SST 09223-15020, 09350-32014 (09351-32130)

Oil seal depth: 0 ± 0.5 mm (0 ± 0.02 in.)

(b) Coat the lip of the oil seal with MP grease.

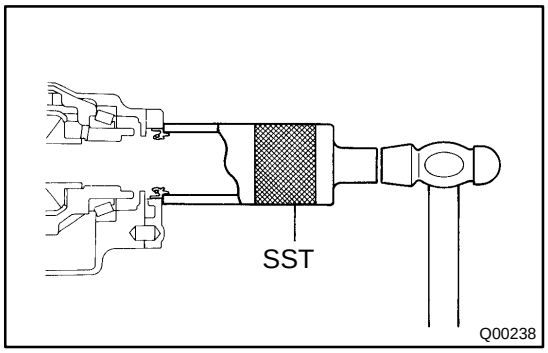

4. INSTALL RIGHT SIDE GEAR SHAFT OIL SEAL

(a) Using SST and a hammer, drive in a new oil seal.

SST 09316-60010 (09316-00010)

Oil seal depth: 0 ± 0.5 mm (0 ± 0.02 in.)

(b) Coat the lip of the oil seal with MP grease.

5. INSTALL FRONT DRIVE SHAFT

(See page SA-24)

6. CHECK TRANSAXLE FLUID LEVEL

(See page DI-160)

FLOOR SHIFT ASSEMBLY

COMPONENTS

AX0KB-01

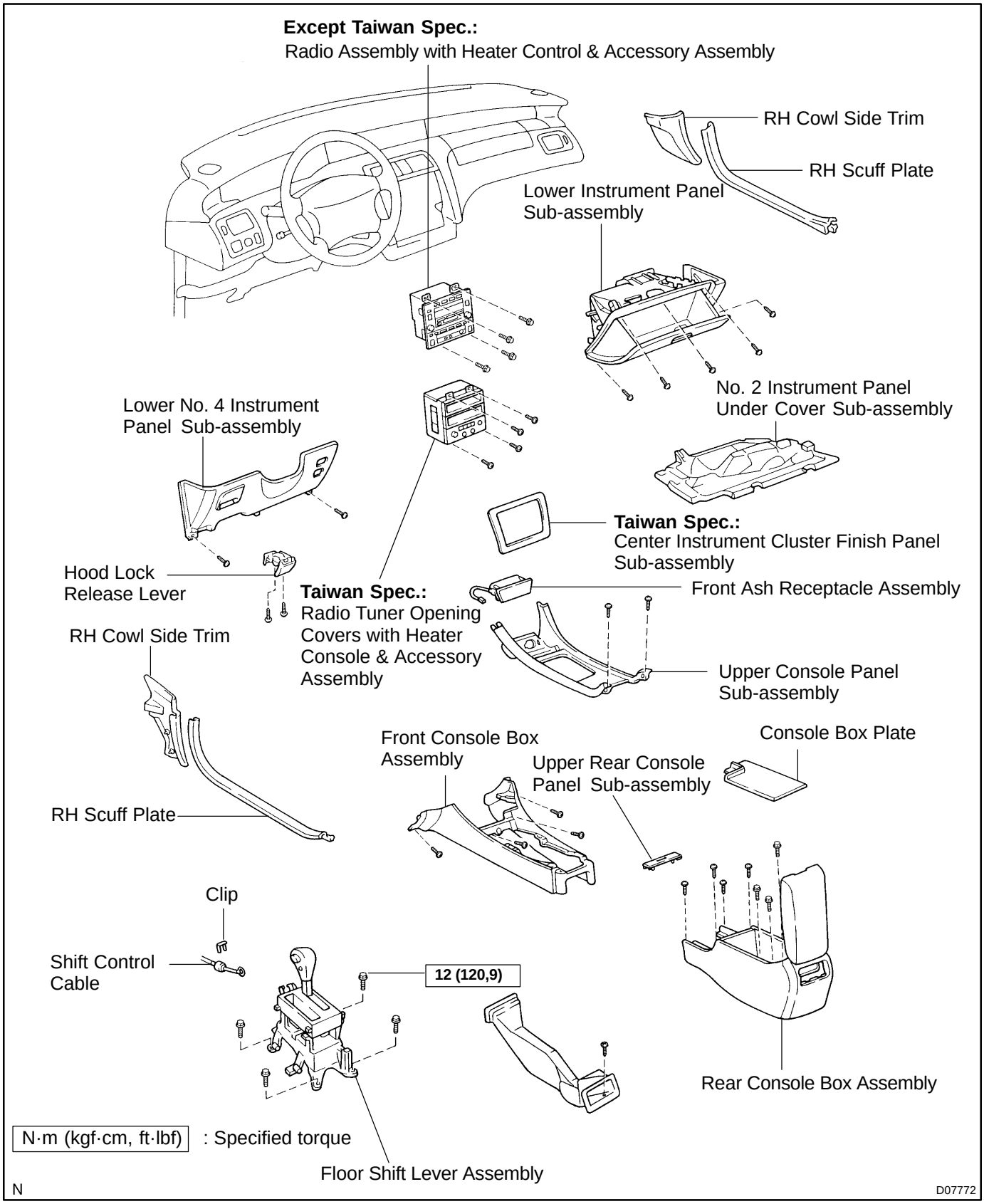

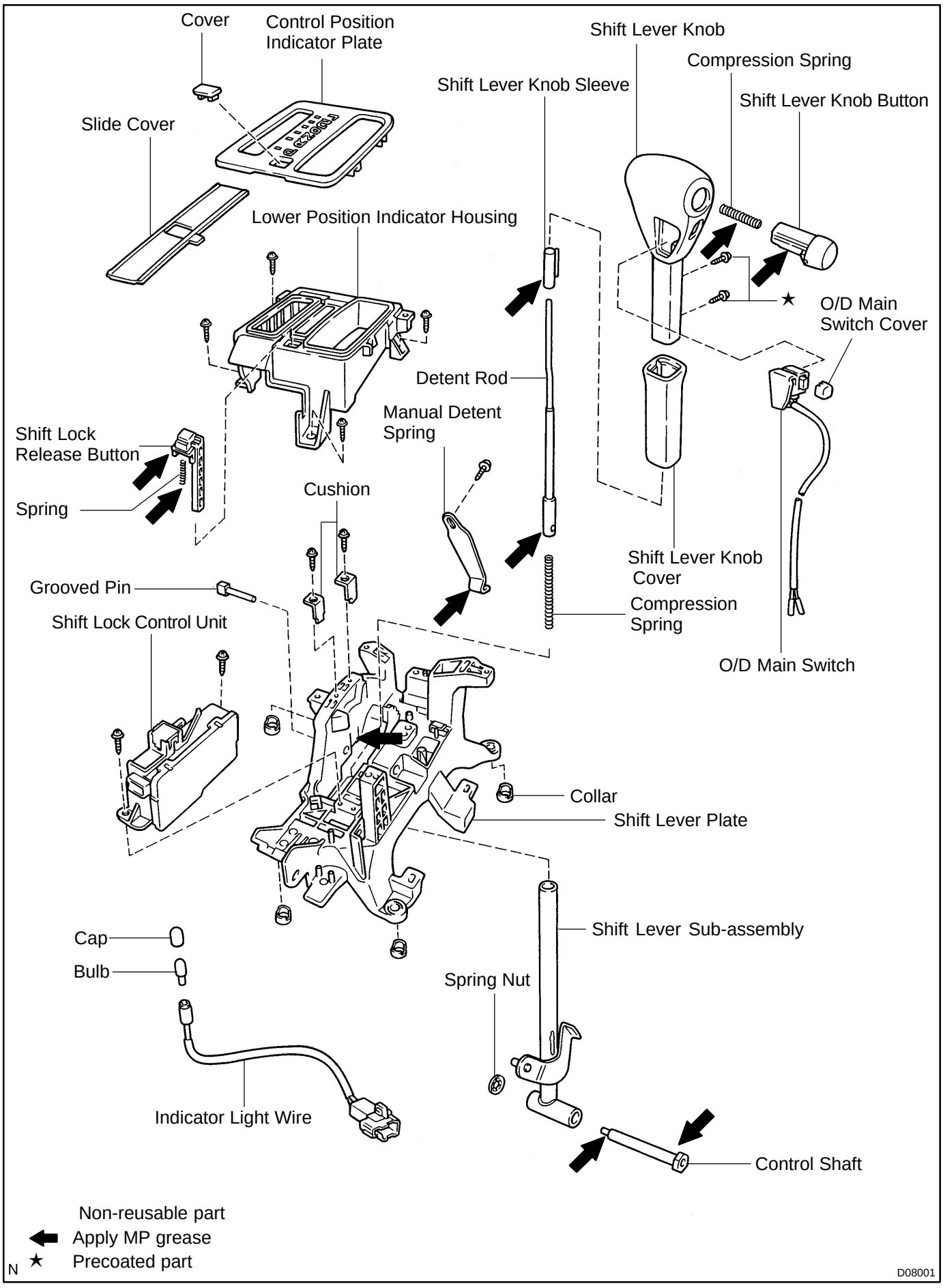
Cover
Control Position Indicator Plate
Slide Cover
Lower Position Indicator Housing
Shift Lever Knob
Compression Spring
Shift Lever Knob Sleeve
Shift Lever Knob Button
★
O/D Main Switch Cover
Detent Rod
Manual Detent Spring
Shift Lock Release Button
Spring
Cushion
Shift Lever Knob Cover
Compression Spring
Grooved Pin
Shift Lock Control Unit
O/D Main Switch
Collar
Shift Lever Plate
Shift Lever Sub-assembly
Cap
Bulb
Spring Nut
Indicator Light Wire
Control Shaft
Non-reusable part
Apply MP grease
★ Precoated part
N
D08001

AX0KD-01

DISASSEMBLY

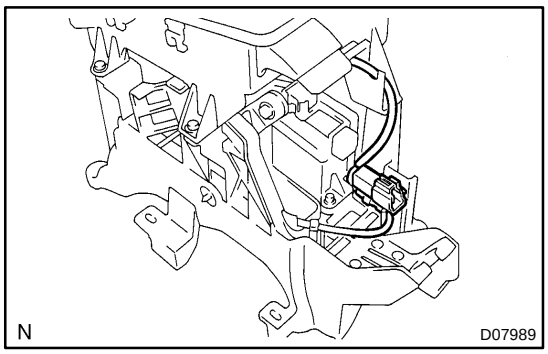

1. REMOVE O/D MAIN SWITCH TERMINAL

(a) Remove the connector from the shift lever plate.

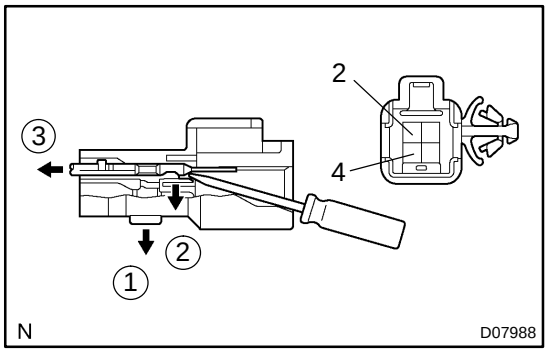

(b) Remove the secondary locking device.

(c) Release the looking lug of the terminals 2 and 4, and pull the terminals out from the rear.

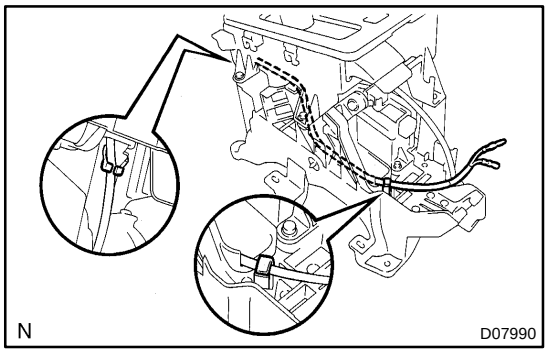

(d) Separate the O/D main switch wire harness from the 2 clamps.

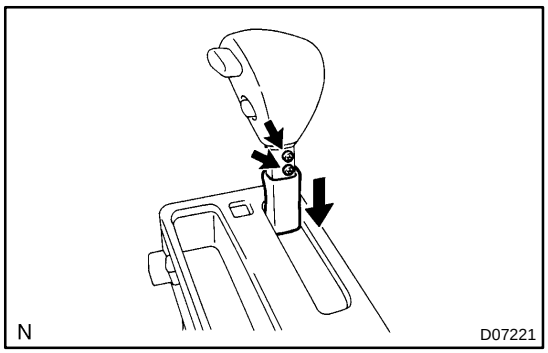

2. REMOVE SHIFT LEVER KNOB SUB-ASSEMBLY

(a) Side the shift lever knob cover.

(b) Remove the 2 screws and shift lever knob sub-assembly.

NOTICE:

Pay attention not to apply unnatural load onto O/D main switch wire harness.

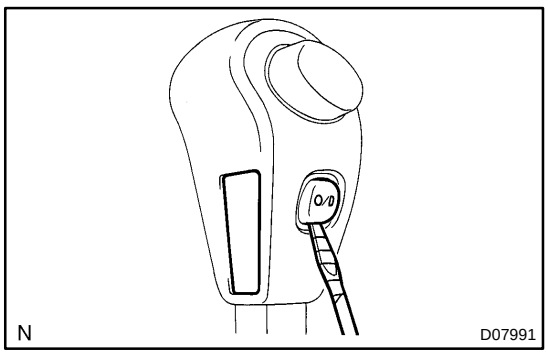

3. DISASSEMBLE SHIFT LEVER KNOB SUB-ASSEMBL Y

(a) Using a small screwdriver, remove the O/D main switch cover.

(b) Using a small screwdriver, remove the O/D main switch from the shift lever knob.

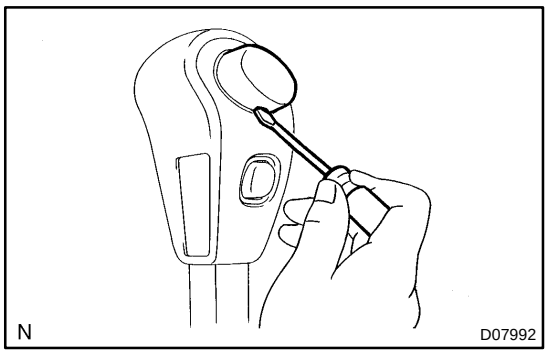

(c) Insert a small screwdriver into the position in the illustration and disengage the claw.
(d) Remove the shift lever knob button and compression spring.

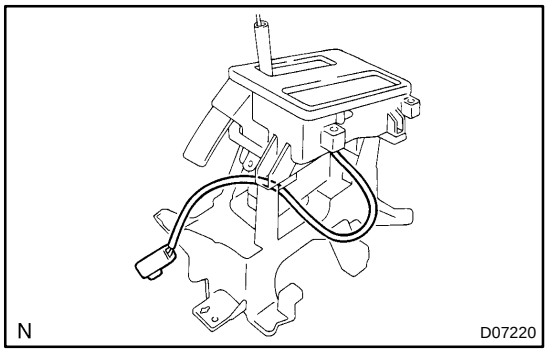

4. REMOVE INDICATOR LIGHT

(a) Remove the indicator light from the lower position indicator housing.
(b) Remove the cap and bulb from the indicator light wire.

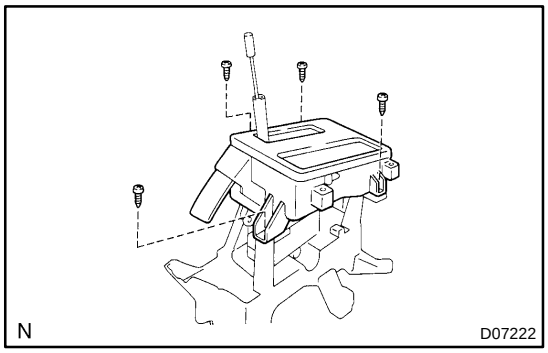

5. REMOVE LOWER POSITION INDICATOR HOUSING

Remove the 4 screws and lower position indicator housing.

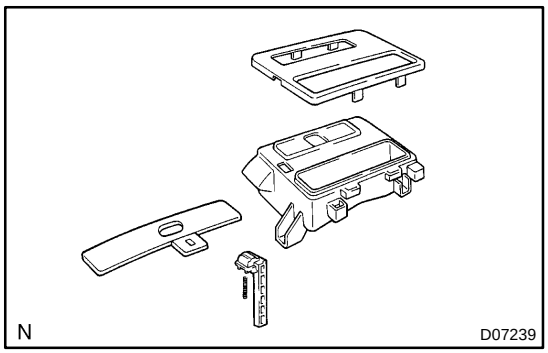

6. DISASSEMBLE LOWER POSITION INDICATOR HOUSING

(a) Remove the control position indicator plate.
(b) Remove the shift lock release button and spring.
(c) Remove the slide cover.

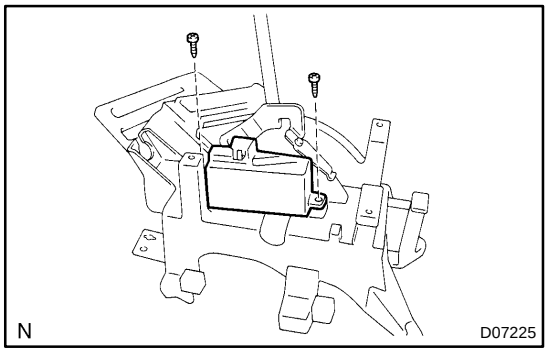

7. REMOVE SHIFT LOCK CONTROL UNIT

Remove the 2 screws and shift lock control unit assembly.

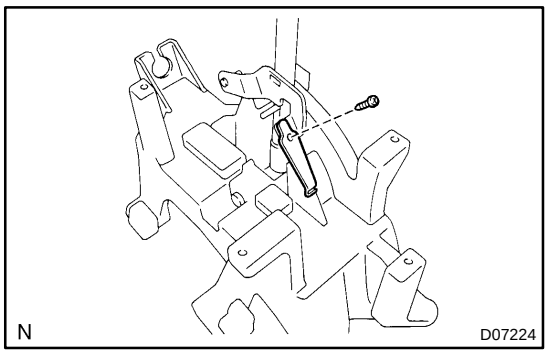

8. REMOVE MANUAL DETENT SPRING

Remove the screw and manual detent spring.

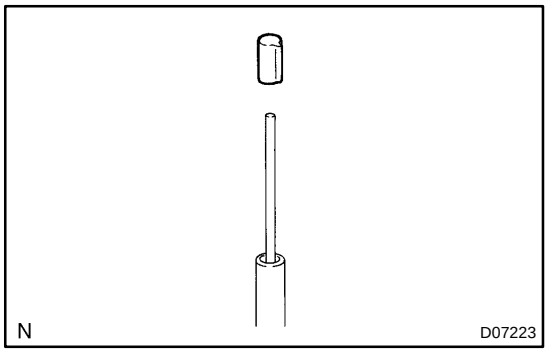

9. REMOVE SHIFT LEVER KNOB SLEEVE

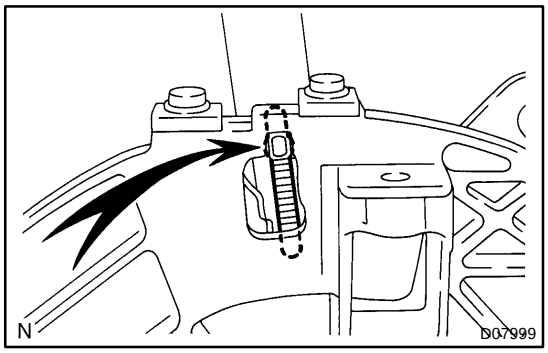

10. REMOVE GROOVED PIN

Secure the room for the pin to be released by using the vice and etc. as shown in the illustration, and hit the grooved pin with a hammer and pull the grooved pin out.

NOTICE:

- ★ **Hit and pull the pin out gradually.**
- ★ **Do not damage the shift lever sub-assembly.**

11. REMOVE DETENT ROD, COMPRESSION SPRING

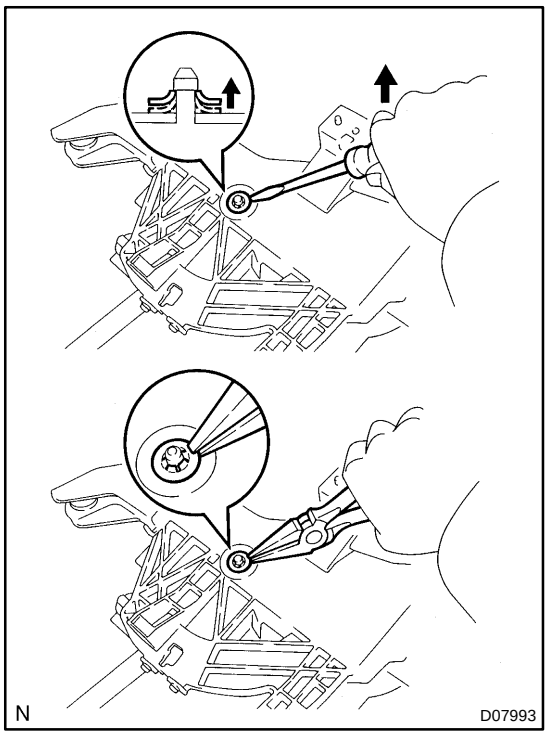

12. REMOVE SHIFT LEVER SUB-ASSEMBLY

(a) Using a screwdriver, pry and push up the spring nut.
(b) Using nippers, cut the spring nut off it.
(c) Remove the control shaft and shift lever sub-assembly.

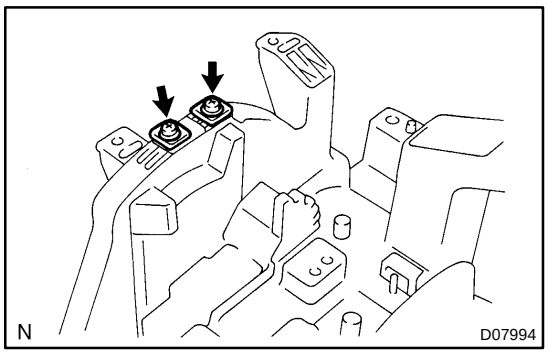

13. REMOVE CUSHION

Remove the 2 screws and 2 cushion.

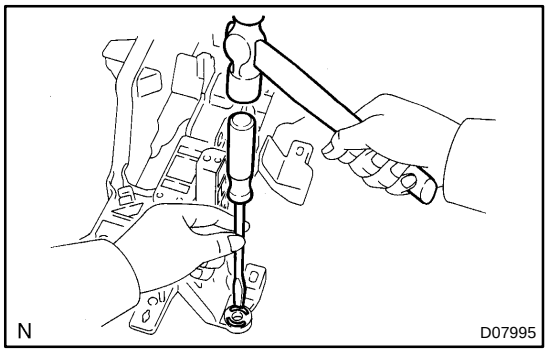

14. REMOVE COLLAR

Using a screwdriver and hammer, remove the 4 collars.

AX0KF-01

INSTALLATION

Installation is in the reverse order of removal (See page AX-22).

HINT:

After installation, inspect shift lever operation.

★ When shifting it to each position, make sure that the shifting lever moves smoothly, can be moderately operated and the position indicator displays correctly.

Positions which can be operated without pressing the shift lever knob button

R → N → D, L → 2 → D → N

Positions which can be operated only with pressing the shift lever knob button

2 → L, N → R → P

Positions which can be operated only with pressing the shift lever knob button, ignition switch ON and brake pedal depressed

P → R

★ When starting the engine, make sure that the vehicle moves forward when shifting from N to D position, and moves rearward when shifting to R position.

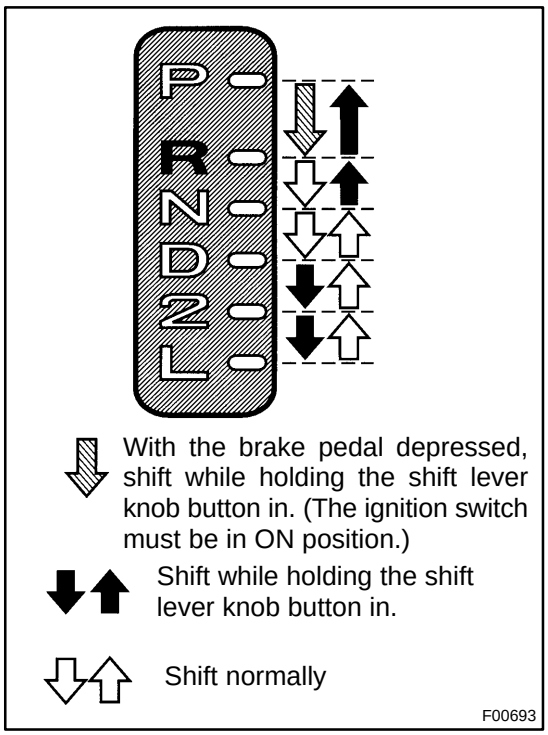

AX0KE-01

REASSEMBLY

1. INSTALL 4 COLLARS

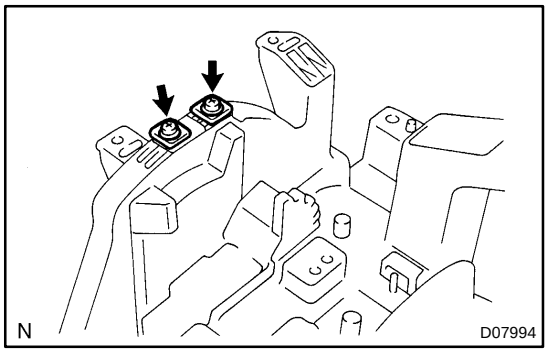

2. INSTALL CUSHION

Install the 2 cushions with the 2 screws.

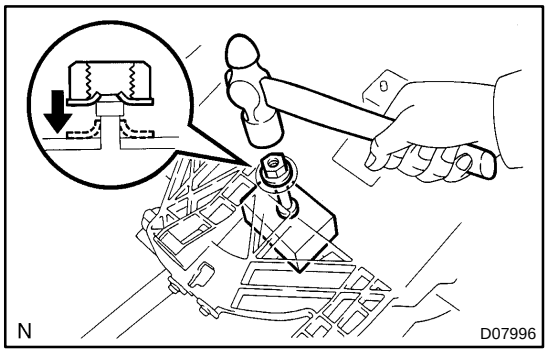

3. INSTALL SHIFT LEVER SUB-ASSEMBLY

(a) Install the shift lever sub-assembly with the control shaft.
(b) Support the control shaft, as shown in the illustration.
(c) Install a new spring nut to the control shaft by knocking them lightly via the 10-mm seated nut.

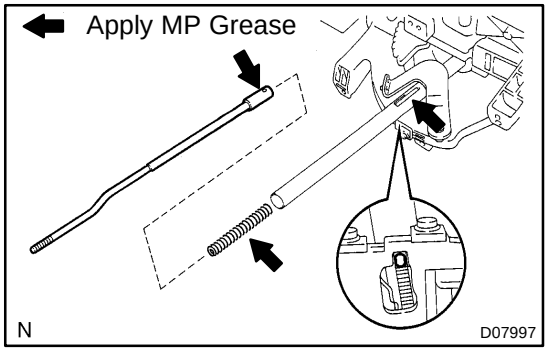

4. INSTALL GROOVED PIN

(a) Apply MP grease on the compression spring, detent rod and shift lever sub-assembly.
(b) Place the shift lever plate.

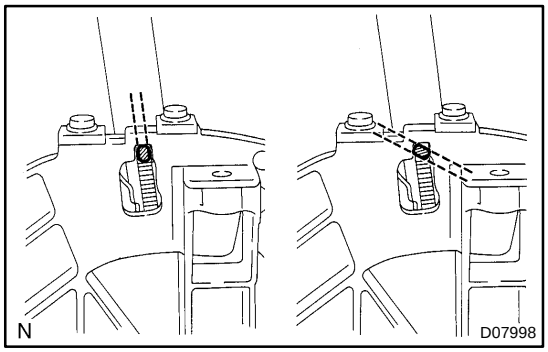

(c) Insert the grooved pin in the detent rod pin hole.

NOTICE:

★ **Assemble the grooved pin to ensure that it fits into the guide hole of the shift lever sub-assembly in parallel.**
★ **Take care not to insert the pin in the wrong direction of the detent rod.**

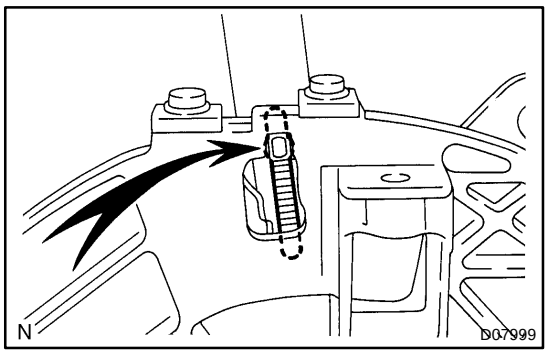

(d) Meet the grooved pin with the notch of the guide hole.

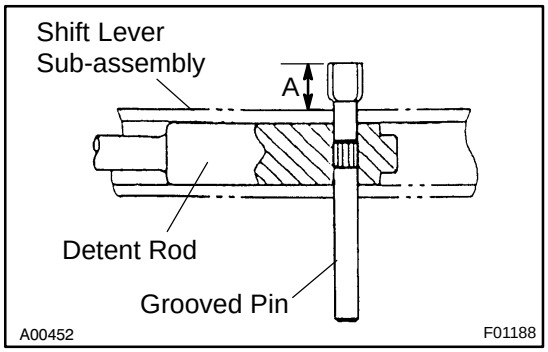

(e) Press the pin with a hammer.

A: 10.0 - 10.4 mm (0.39 - 0.41 in.)

NOTICE:

When pressing in the grooved pin, if doing it at the place other than the notch, the shift lever sub-assembly might be damaged.

5. CHECK DETENT ROD OPERATION

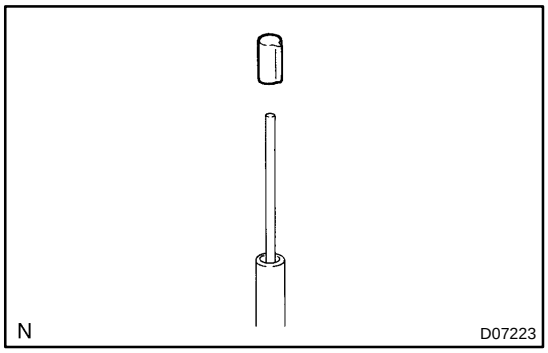

6. INSTALL SHIFT LEVER KNOB SLEEVE

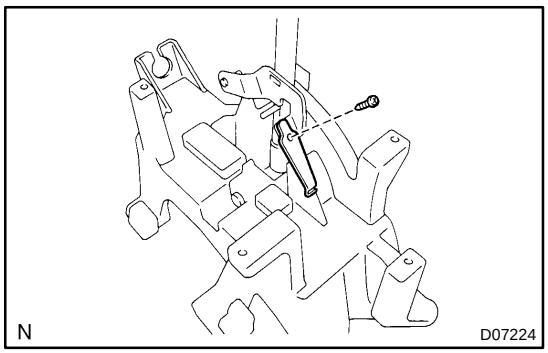

7. INSTALL MANUAL DETENT SPRING

Install the manual detent spring with the screw.

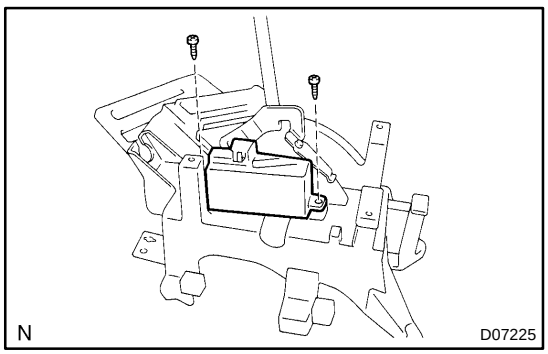

8. INSTALL SHIFT LOCK CONTROL UNIT

Install the shift lock unit assembly with the 2 screws.

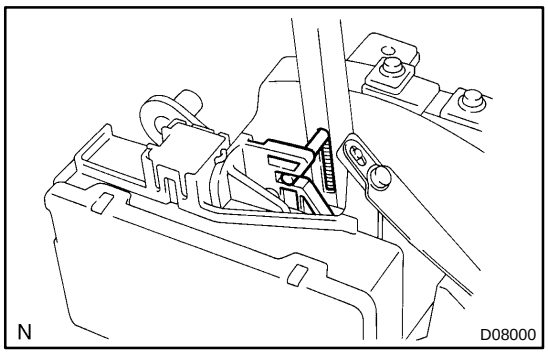

NOTICE:
Install the grooved pin into the groove of the shift lock unit as shown in the illustration.

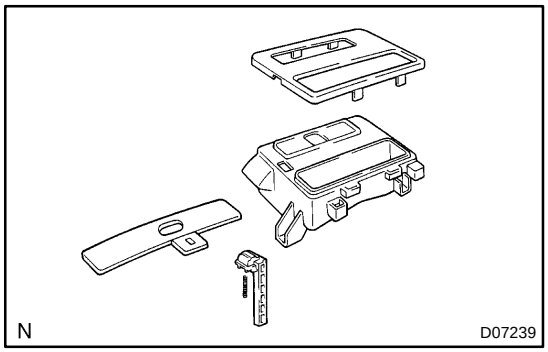

9. ASSEMBLE LOWER POSITION INDICATOR HOUSING
(a) Install the slide cover.
(b) Install the spring and shift lock release bottom.
(c) Install the control position indicator plate.

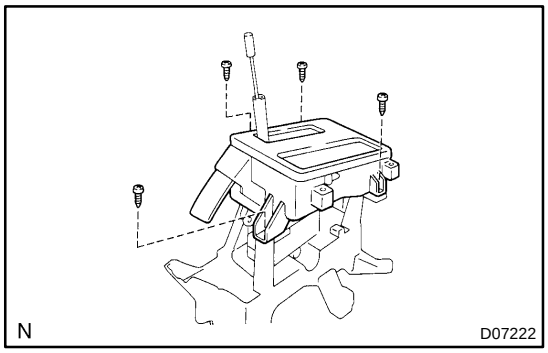

10. INSTALL LOWER POSITION INDICATOR HOUSING
Install the lower position indicator housing with the 4 screws.

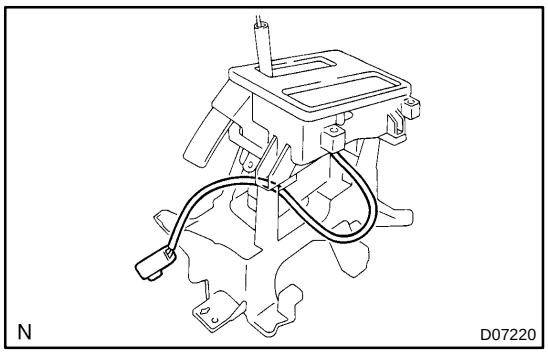

11. INSTALL INDICATOR LIGHT
(a) Install the bulb and cap to the indicator light wire.
(b) Install the indicator light to the lower position indicator housing.

12. ASSEMBLE SHIFT LEVER KNOB SUB-ASSEMBLY
(a) Install the spring and shift lever knob to the shift lever knob.
(b) Install the O/D main switch and O/D main switch cover to the shift lever knob.

13. INSTALL SHIFT LEVER KNOB AND SHIFT LEVER KNOB COVER
(a) Pass through the wire harness of the O/D main switch as shown in the illustration and set it.
(b) Install the shift lever knob and shift lever knob cover to the shift lever sub-assembly.

NOTICE:
When operating the shift lever sub-assembly, check that excessive force is not applied to the wire harness of the O/D main switch.

(c) Install the 2 shift lever sub-assembly set screws.
Torque: 2.2 N·m (22 kgf·cm, 19 in.·lbf)

(d) Raise the shift lever knob cover.

14. CONNECT O/D MAIN SWITCH TERMINAL

(a) Connect the terminals of the O/D main switch.

(b) Connect the O/D main switch connector to the shift lever plate.

AX0KC-01

REMOVAL

1. **REMOVE UPPER REAR CONSOLE PANEL SUB-ASSEMBLY (See page BO-90)**
2. **REMOVE FRONT ASH RECEPTACLE ASSEMBLY (See page BO-90)**
3. **REMOVE UPPER CONSOLE PANEL SUB- ASSEMBLY (See page BO-90)**
4. **REMOVE CONSOLE BOX PLATE (See page BO-90)**
5. **REMOVE REAR CONSOLE BOX ASSEMBLY (See page BO-90)**
6. **REMOVE LH AND RH SCUFF PLATES (See page BO-90)**
7. **REMOVE LH AND RH COWL SIDE TRIMS (See page BO-90)**
8. **REMOVE LOWER NO.4 INSTRUMENT PANEL SUB-ASSEMBLY (See page BO-90)**
9. **REMOVE NO.2 INSTRUMENT PANEL UNDER COVER SUB-ASSEMBL Y (See page BO-90)**
10. **REMOVE LOWER INSTRUMENT PANEL SUB- ASSEMBLY (See page BO-90)**
11. **Taiwan Spec.:**
    REMOVE CENTER INSTRUMENT CLUSTER FINISH PANEL SUB-ASSEMBLY (See page BO-90)
12. **Taiwan Spec.:**
    REMOVE RADIO TUNER OPENING COVERS WITH HEATER CONSOLE & ACCESSORY ASSEMBLY (See page BO-90)
13. **Except Taiwan spec.:**
    REMOVE RADIO ASSEMBLY WITH HEATER CONSOLE & ACCESSORY ASSEMBLY (See page BO-90)
14. **REMOVE FRONT CONSOLE BOX ASSEMBLY (See page BO-90)**
15. **w/ Rear Heater:**
    REMOVE REAR CONSOLE NO.1 BOX ASSEMBLY CONSOLE BOX DUCT

Remove the clip and duct.

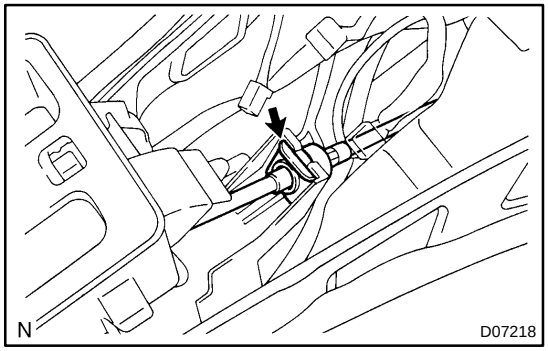

16. **REMOVE FLOOR SHIFT LEVER ASSEMBLY**

(a) Remove the clip and disconnect the shift cable from the floor shift assembly.

(b) Disconnect the wire harness from the wire harness clamp.

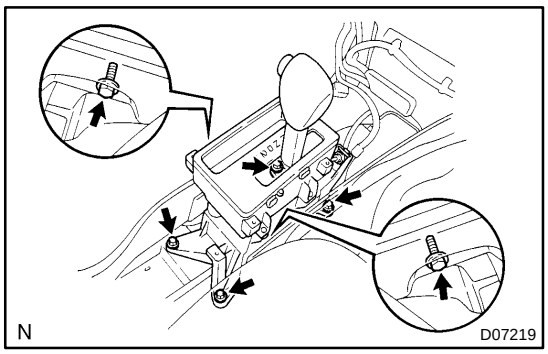

(c) Remove the 2 bolts from the brace.
(d) Remove the 4 bolts and floor shift assembly.
Torque: 12 N·m (120kgf·cm, 9 ft·lbf)

FLOOR SHIFT ASSEMBLY

COMPONENTS

AX0KB-01

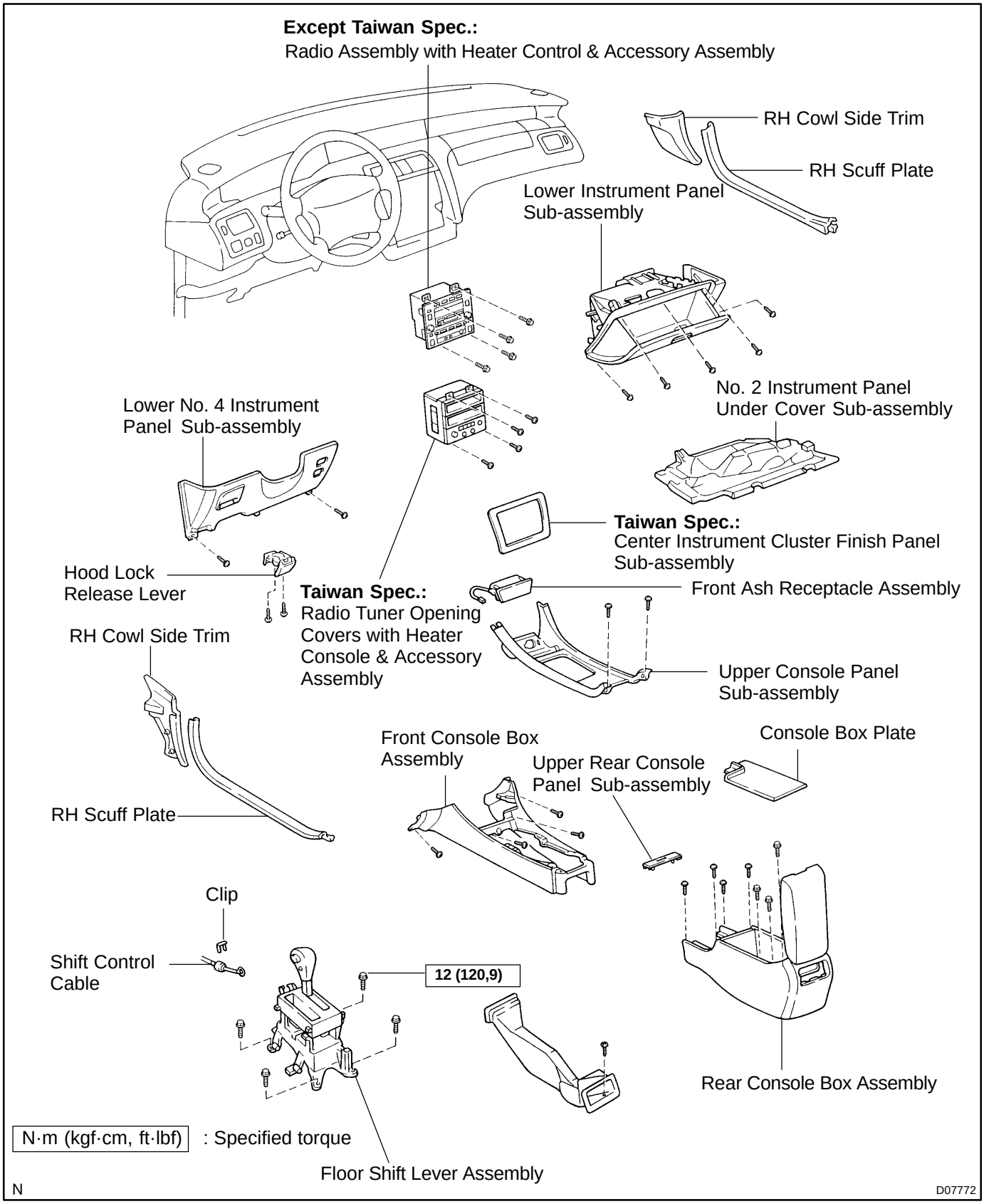

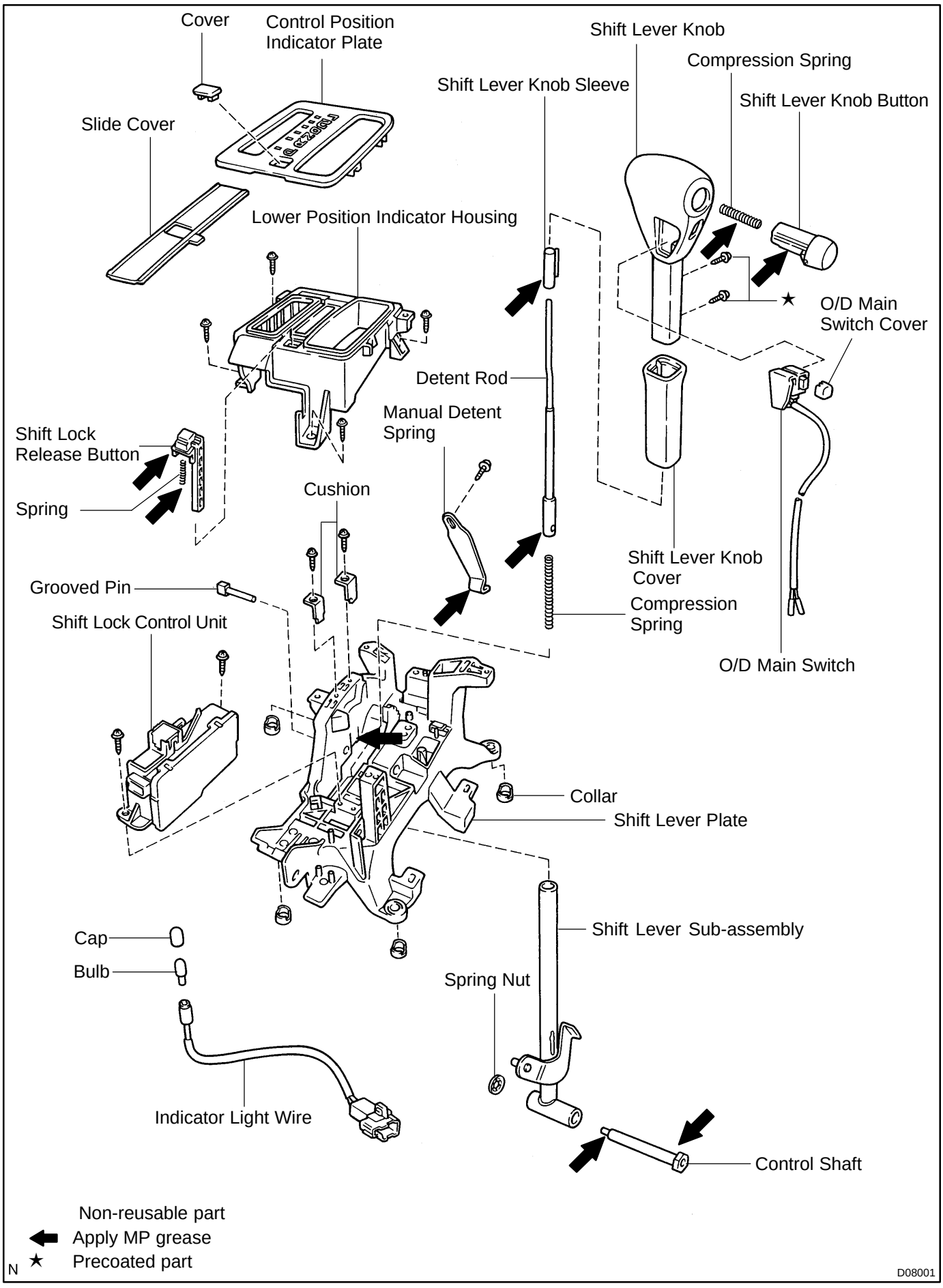
Cover
Control Position Indicator Plate
Slide Cover
Lower Position Indicator Housing
Shift Lever Knob
Compression Spring
Shift Lever Knob Sleeve
Shift Lever Knob Button
★
O/D Main Switch Cover
Detent Rod
Manual Detent Spring
Shift Lock Release Button
Spring
Cushion
Shift Lever Knob Cover
Compression Spring
Grooved Pin
Shift Lock Control Unit
O/D Main Switch
Collar
Shift Lever Plate
Shift Lever Sub-assembly
Cap
Bulb
Spring Nut
Indicator Light Wire
Control Shaft
Non-reusable part
Apply MP grease
★ Precoated part
N
D08001

AX0KD-01

DISASSEMBLY

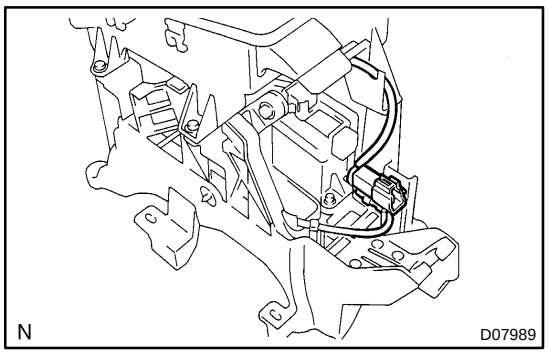

1. REMOVE O/D MAIN SWITCH TERMINAL

(a) Remove the connector from the shift lever plate.

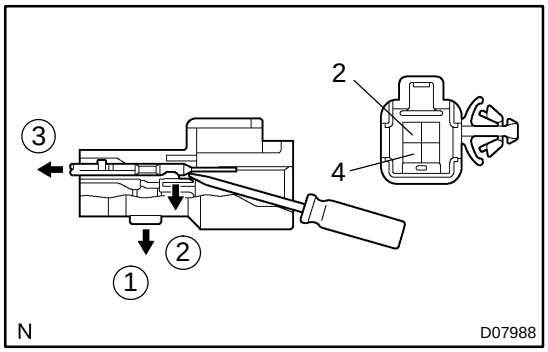

(b) Remove the secondary locking device.

(c) Release the looking lug of the terminals 2 and 4, and pull the terminals out from the rear.

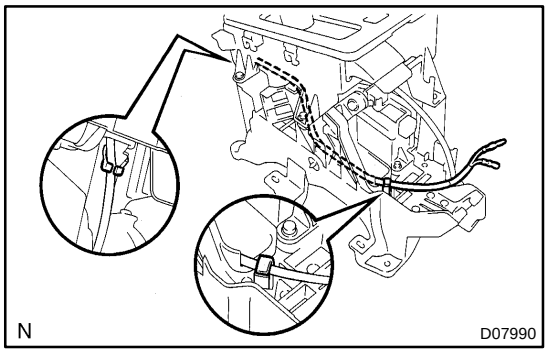

(d) Separate the O/D main switch wire harness from the 2 clamps.

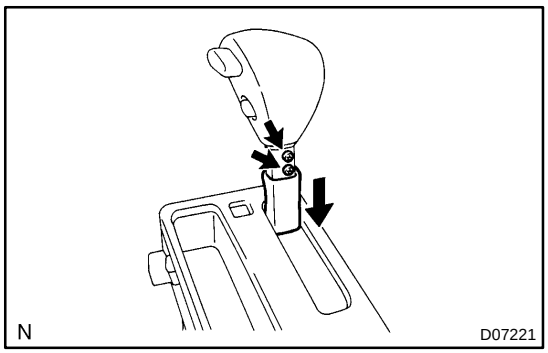

2. REMOVE SHIFT LEVER KNOB SUB-ASSEMBLY

(a) Side the shift lever knob cover.

(b) Remove the 2 screws and shift lever knob sub-assembly.

NOTICE:

Pay attention not to apply unnatural load onto O/D main switch wire harness.

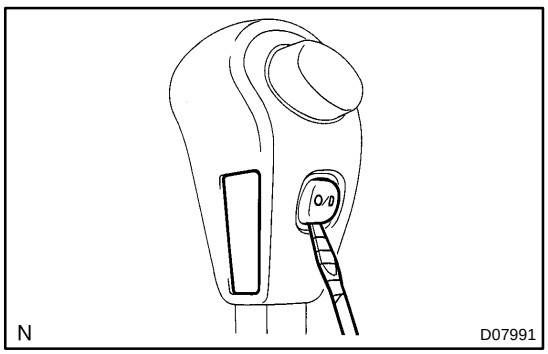

3. DISASSEMBLE SHIFT LEVER KNOB SUB-ASSEMBL Y

(a) Using a small screwdriver, remove the O/D main switch cover.

(b) Using a small screwdriver, remove the O/D main switch from the shift lever knob.

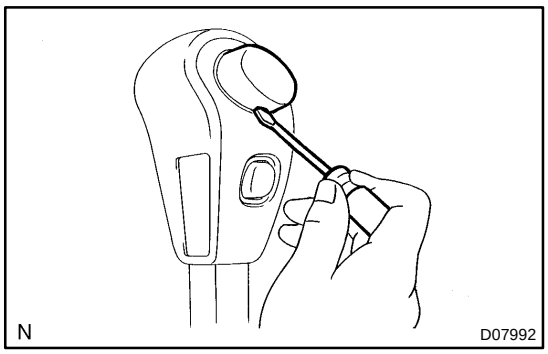

(c) Insert a small screwdriver into the position in the illustration and disengage the claw.
(d) Remove the shift lever knob button and compression spring.

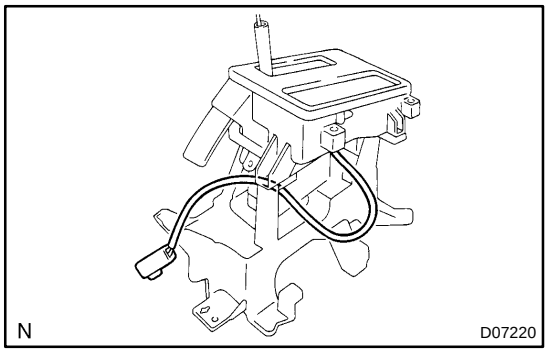

4. REMOVE INDICATOR LIGHT

(a) Remove the indicator light from the lower position indicator housing.
(b) Remove the cap and bulb from the indicator light wire.

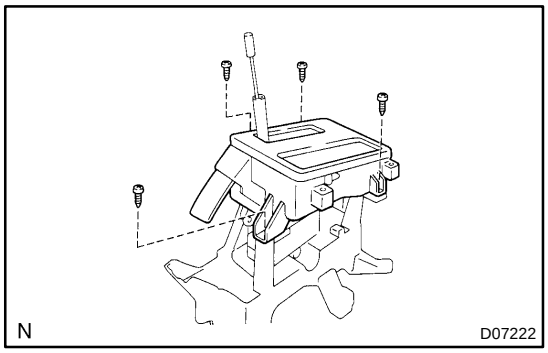

5. REMOVE LOWER POSITION INDICATOR HOUSING

Remove the 4 screws and lower position indicator housing.

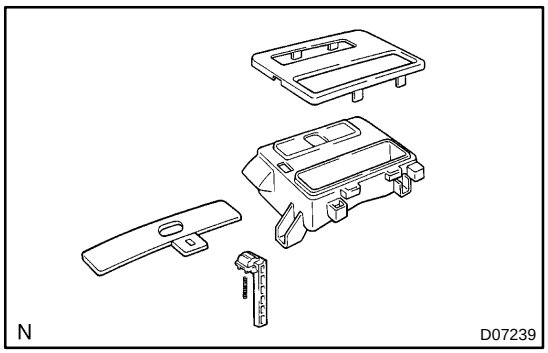

6. DISASSEMBLE LOWER POSITION INDICATOR HOUSING

(a) Remove the control position indicator plate.
(b) Remove the shift lock release button and spring.
(c) Remove the slide cover.

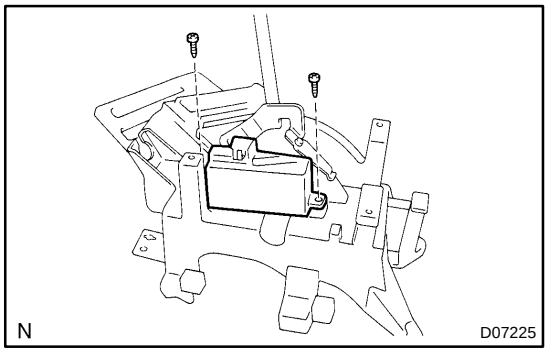

7. REMOVE SHIFT LOCK CONTROL UNIT

Remove the 2 screws and shift lock control unit assembly.

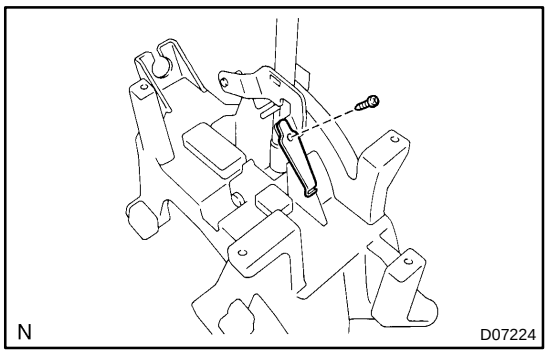

8. REMOVE MANUAL DETENT SPRING

Remove the screw and manual detent spring.

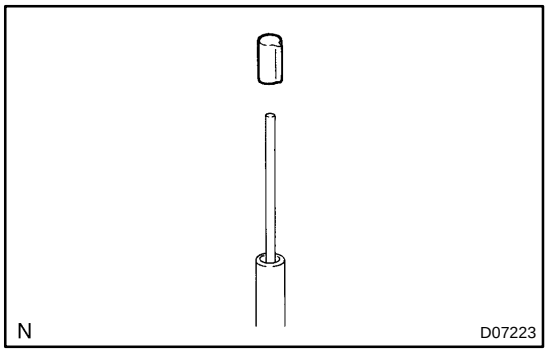

9. REMOVE SHIFT LEVER KNOB SLEEVE

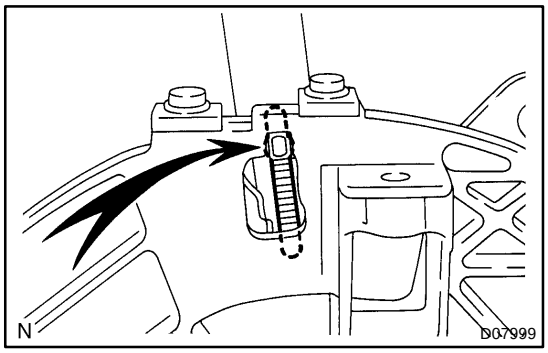

10. REMOVE GROOVED PIN

Secure the room for the pin to be released by using the vice and etc. as shown in the illustration, and hit the grooved pin with a hammer and pull the grooved pin out.

NOTICE:

- ★ **Hit and pull the pin out gradually.**
- ★ **Do not damage the shift lever sub-assembly.**

11. REMOVE DETENT ROD, COMPRESSION SPRING

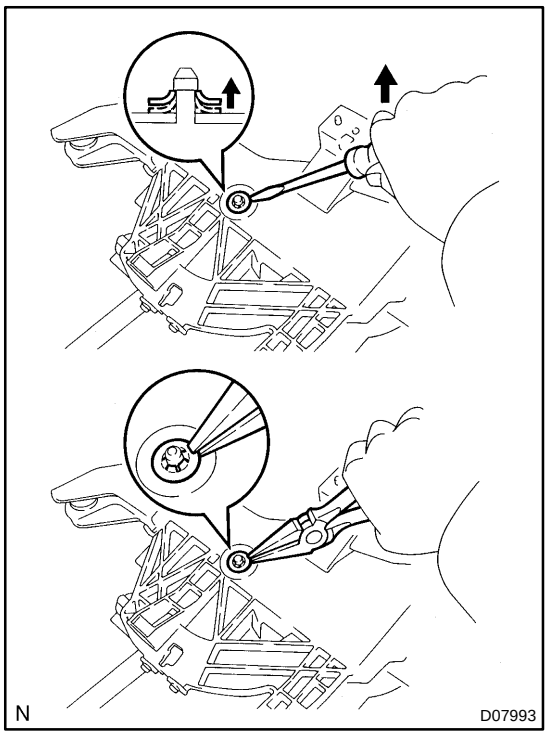

12. REMOVE SHIFT LEVER SUB-ASSEMBLY

(a) Using a screwdriver, pry and push up the spring nut.
(b) Using nippers, cut the spring nut off it.
(c) Remove the control shaft and shift lever sub-assembly.

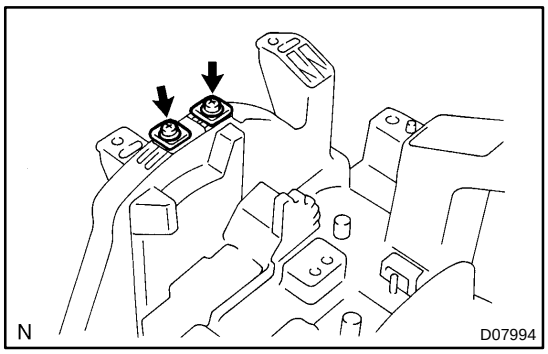

13. REMOVE CUSHION

Remove the 2 screws and 2 cushion.

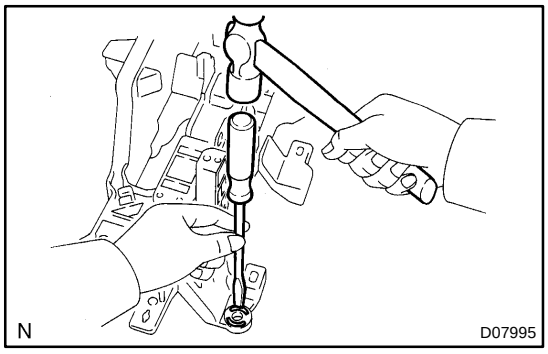

14. REMOVE COLLAR

Using a screwdriver and hammer, remove the 4 collars.

AX0KF-01

INSTALLATION

Installation is in the reverse order of removal (See page AX-22).

HINT:

After installation, inspect shift lever operation.

★ When shifting it to each position, make sure that the shifting lever moves smoothly, can be moderately operated and the position indicator displays correctly.

Positions which can be operated without pressing the shift lever knob button

R → N → D, L → 2 → D → N

Positions which can be operated only with pressing the shift lever knob button

2 → L, N → R → P

Positions which can be operated only with pressing the shift lever knob button, ignition switch ON and brake pedal depressed

P → R

★ When starting the engine, make sure that the vehicle moves forward when shifting from N to D position, and moves rearward when shifting to R position.

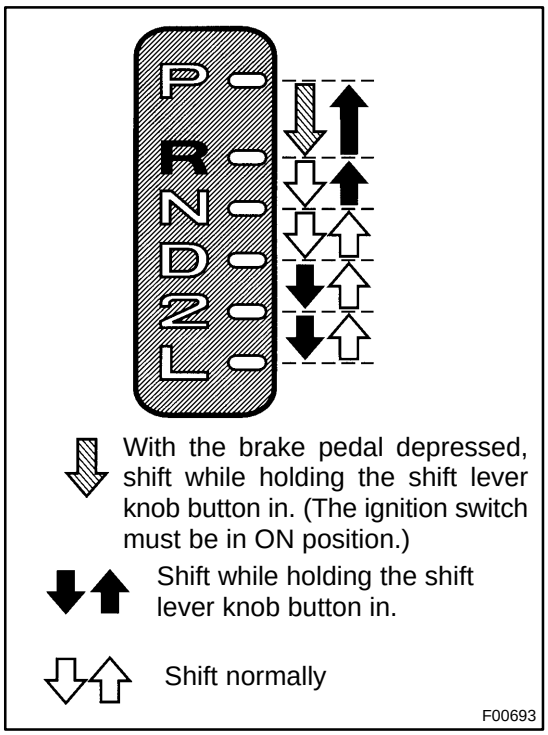

AX0KE-01

REASSEMBLY

1. INSTALL 4 COLLARS

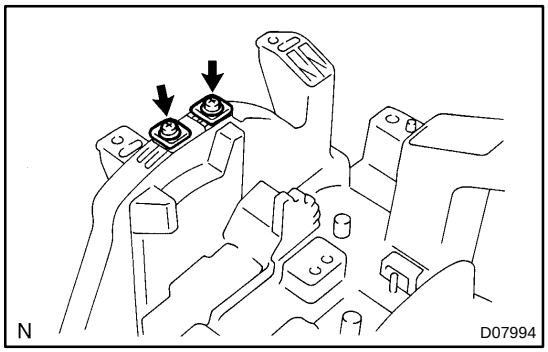

2. INSTALL CUSHION

Install the 2 cushions with the 2 screws.

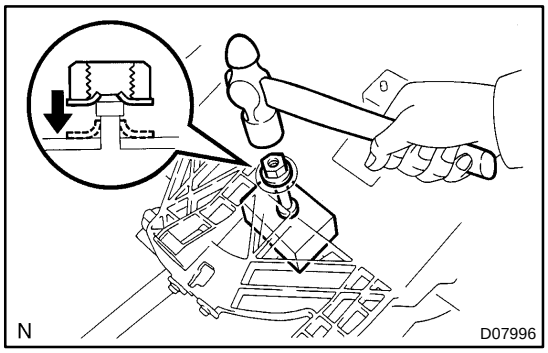

3. INSTALL SHIFT LEVER SUB-ASSEMBLY

(a) Install the shift lever sub-assembly with the control shaft.
(b) Support the control shaft, as shown in the illustration.
(c) Install a new spring nut to the control shaft by knocking them lightly via the 10-mm seated nut.

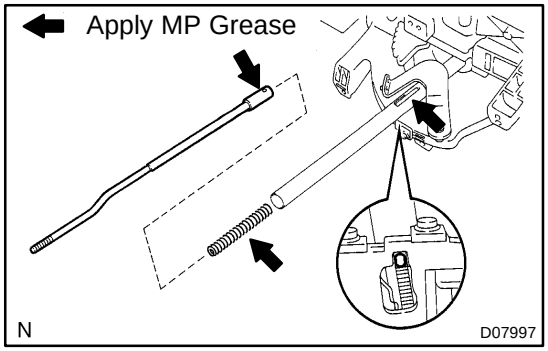

4. INSTALL GROOVED PIN

(a) Apply MP grease on the compression spring, detent rod and shift lever sub-assembly.
(b) Place the shift lever plate.

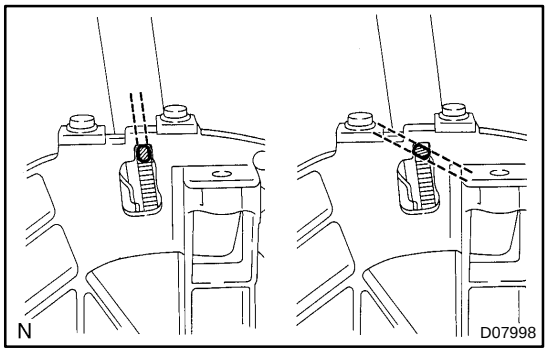

(c) Insert the grooved pin in the detent rod pin hole.

NOTICE:

★ **Assemble the grooved pin to ensure that it fits into the guide hole of the shift lever sub-assembly in parallel.**
★ **Take care not to insert the pin in the wrong direction of the detent rod.**

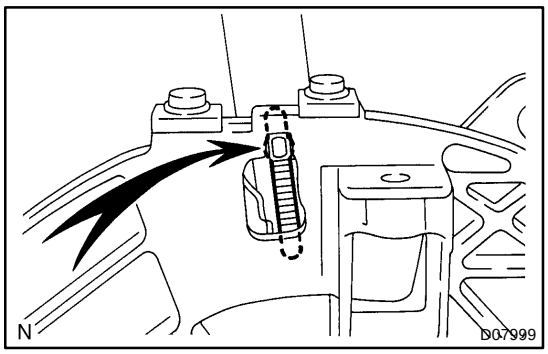

(d) Meet the grooved pin with the notch of the guide hole.

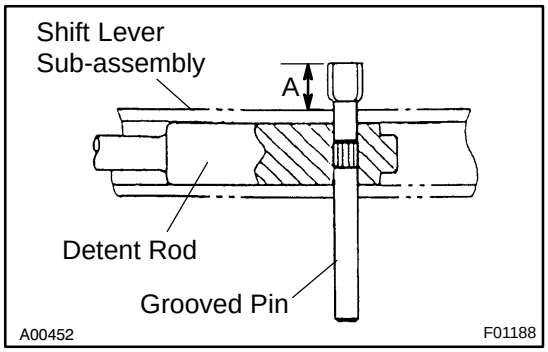

(e) Press the pin with a hammer.

A: 10.0 - 10.4 mm (0.39 - 0.41 in.)

NOTICE:

When pressing in the grooved pin, if doing it at the place other than the notch, the shift lever sub-assembly might be damaged.

5. CHECK DETENT ROD OPERATION

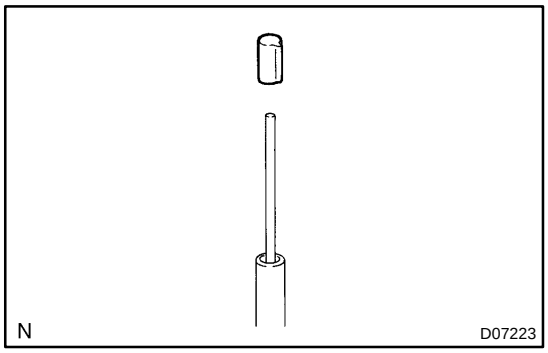

6. INSTALL SHIFT LEVER KNOB SLEEVE

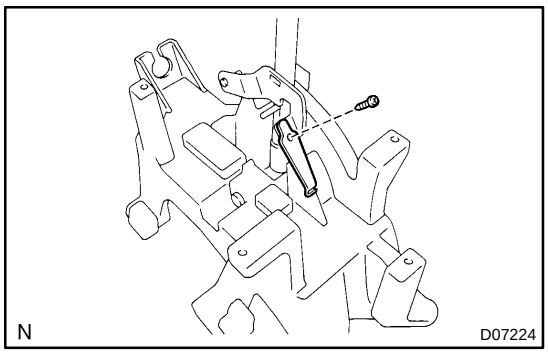

7. INSTALL MANUAL DETENT SPRING

Install the manual detent spring with the screw.

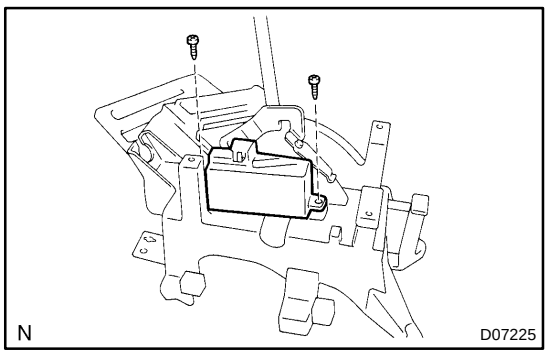

8. INSTALL SHIFT LOCK CONTROL UNIT

Install the shift lock unit assembly with the 2 screws.

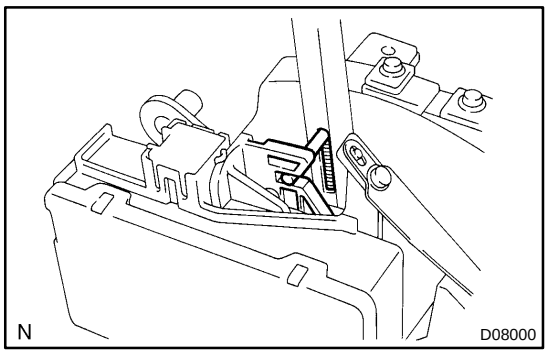

NOTICE:
Install the grooved pin into the groove of the shift lock unit as shown in the illustration.

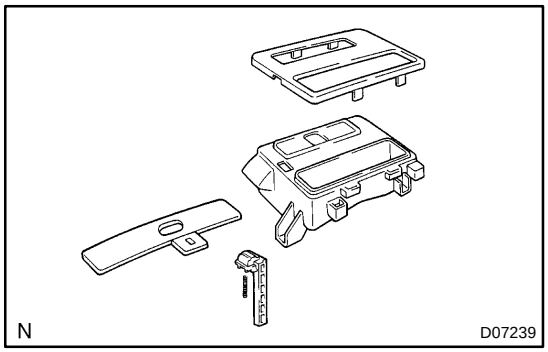

9. ASSEMBLE LOWER POSITION INDICATOR HOUSING
(a) Install the slide cover.
(b) Install the spring and shift lock release bottom.
(c) Install the control position indicator plate.

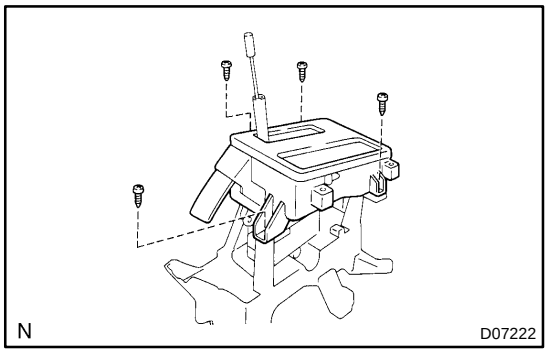

10. INSTALL LOWER POSITION INDICATOR HOUSING
Install the lower position indicator housing with the 4 screws.

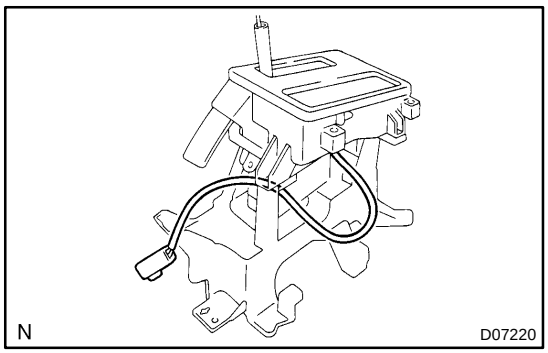

11. INSTALL INDICATOR LIGHT
(a) Install the bulb and cap to the indicator light wire.
(b) Install the indicator light to the lower position indicator housing.

12. ASSEMBLE SHIFT LEVER KNOB SUB-ASSEMBLY
(a) Install the spring and shift lever knob to the shift lever knob.
(b) Install the O/D main switch and O/D main switch cover to the shift lever knob.

13. INSTALL SHIFT LEVER KNOB AND SHIFT LEVER KNOB COVER
(a) Pass through the wire harness of the O/D main switch as shown in the illustration and set it.
(b) Install the shift lever knob and shift lever knob cover to the shift lever sub-assembly.

NOTICE:
When operating the shift lever sub-assembly, check that excessive force is not applied to the wire harness of the O/D main switch.

(c) Install the 2 shift lever sub-assembly set screws.
Torque: 2.2 N·m (22 kgf·cm, 19 in.·lbf)

(d) Raise the shift lever knob cover.

14. CONNECT O/D MAIN SWITCH TERMINAL

(a) Connect the terminals of the O/D main switch.

(b) Connect the O/D main switch connector to the shift lever plate.

AX0KC-01

REMOVAL

1. **REMOVE UPPER REAR CONSOLE PANEL SUB-ASSEMBLY (See page BO-90)**
2. **REMOVE FRONT ASH RECEPTACLE ASSEMBLY (See page BO-90)**
3. **REMOVE UPPER CONSOLE PANEL SUB- ASSEMBLY (See page BO-90)**
4. **REMOVE CONSOLE BOX PLATE (See page BO-90)**
5. **REMOVE REAR CONSOLE BOX ASSEMBLY (See page BO-90)**
6. **REMOVE LH AND RH SCUFF PLATES (See page BO-90)**
7. **REMOVE LH AND RH COWL SIDE TRIMS (See page BO-90)**
8. **REMOVE LOWER NO.4 INSTRUMENT PANEL SUB-ASSEMBLY (See page BO-90)**
9. **REMOVE NO.2 INSTRUMENT PANEL UNDER COVER SUB-ASSEMBL Y (See page BO-90)**
10. **REMOVE LOWER INSTRUMENT PANEL SUB- ASSEMBLY (See page BO-90)**
11. **Taiwan Spec.:**
    REMOVE CENTER INSTRUMENT CLUSTER FINISH PANEL SUB-ASSEMBLY (See page BO-90)
12. **Taiwan Spec.:**
    REMOVE RADIO TUNER OPENING COVERS WITH HEATER CONSOLE & ACCESSORY ASSEMBLY (See page BO-90)
13. **Except Taiwan spec.:**
    REMOVE RADIO ASSEMBLY WITH HEATER CONSOLE & ACCESSORY ASSEMBLY (See page BO-90)
14. **REMOVE FRONT CONSOLE BOX ASSEMBLY (See page BO-90)**
15. **w/ Rear Heater:**
    REMOVE REAR CONSOLE NO.1 BOX ASSEMBLY CONSOLE BOX DUCT

Remove the clip and duct.

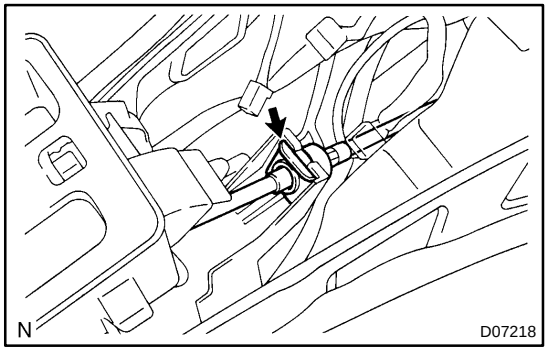

16. **REMOVE FLOOR SHIFT LEVER ASSEMBLY**

(a) Remove the clip and disconnect the shift cable from the floor shift assembly.

(b) Disconnect the wire harness from the wire harness clamp.

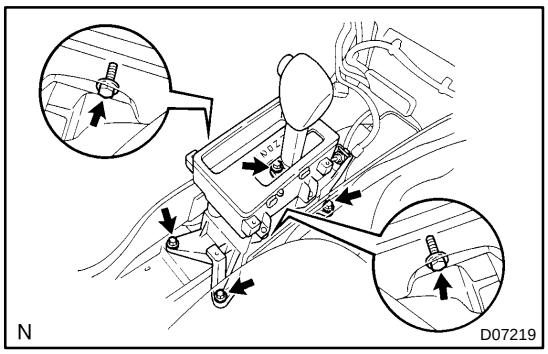

(c) Remove the 2 bolts from the brace.
(d) Remove the 4 bolts and floor shift assembly.
Torque: 12 N·m (120kgf·cm, 9 ft·lbf)

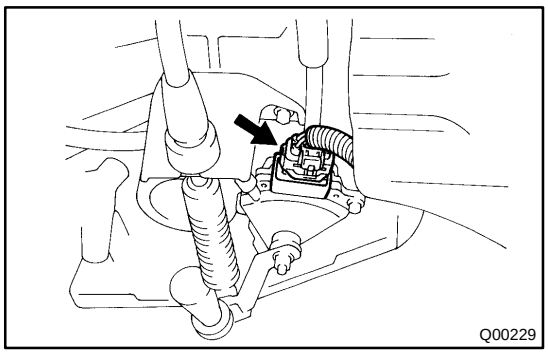

PARK/NEUTRAL POSITION (PNP) SWITCH

AX0CJ-02

ON-VEHICLE REPAIR

1. REMOVE ENGINE UNDER COVER

2. DISCONNECT PARK/NEUTRAL POSITION SWITCH CONNECTOR

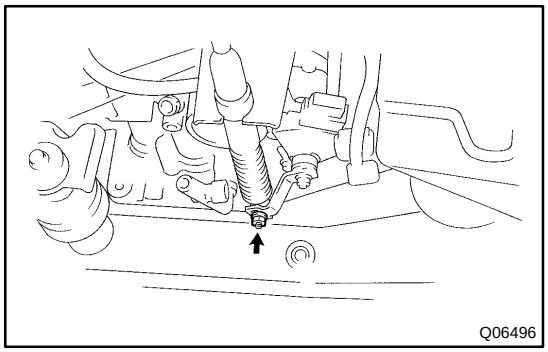

3. REMOVE PARK/NEUTRAL POSITION SWITCH

(a) Remove the clip from the shift control cable.

(b) Remove the nut and disconnect the control cable.

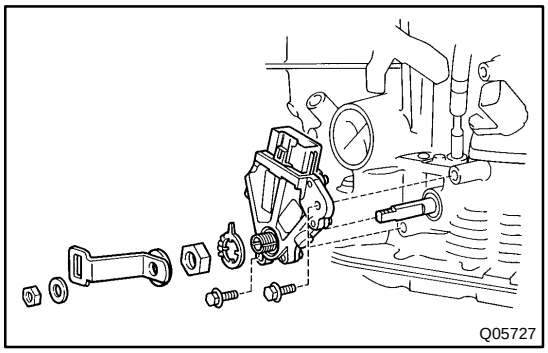

(c) Remove the nut, washer and transaxle control shaft lever.

(d) Using a screwdriver, pry off the lock plate.

(e) Remove the nut and lock plate.

(f) Remove the 2 bolts and pull out the park/neutral position switch.

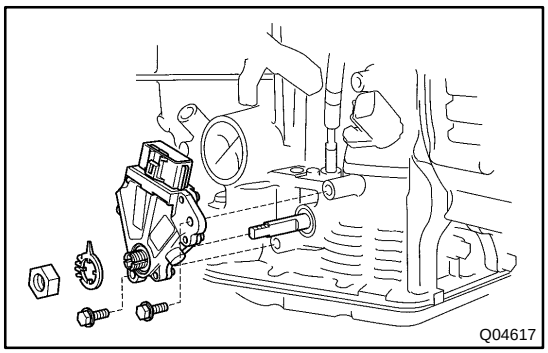

4. INSTALL AND ADJUST PARK/NEUTRAL POSITION SWITCH

(a) Install the park/neutral position switch with the 2 bolts.
Torque: 5.4 N·m (55 kgf·cm, 48 in.·lbf)

(b) Install a new lock plate and nut.
Torque: 6.9 N·m (70 kgf·cm, 61 in.·lbf)

(c) Bend the claws on the lock plate to stake the nut.

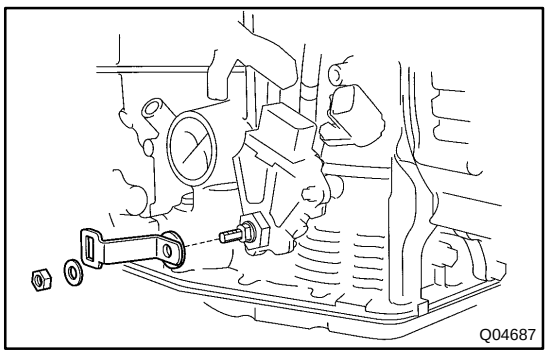

(d) Install the transaxle control shaft lever and washer.

(e) Install and torque the nut.
Torque: 15 N·m (150 kgf·cm, 11 ft·lbf)

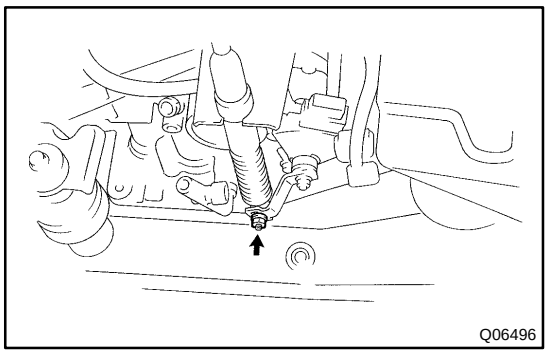

(f) Install the control cable and nut.
Torque: 15 N·m (150 kgf·cm, 11 ft·lbf)

(g) Install the clip to the shift control cable.

5. CONNECT PARK/NEUTRAL POSITION SWITCH CONNECTOR

6. CHECK PARK/NEUTRAL POSITION SWITCH OPERATION

Check that the engine can be started with the shift lever only in the N or P position, but not in other positions.
If not as started above, carry out the adjustment procedure (See page DI-160).

7. TEST DRIVE VEHICLE

8. INSTALL ENGINE UNDER COVER

AX05E-03

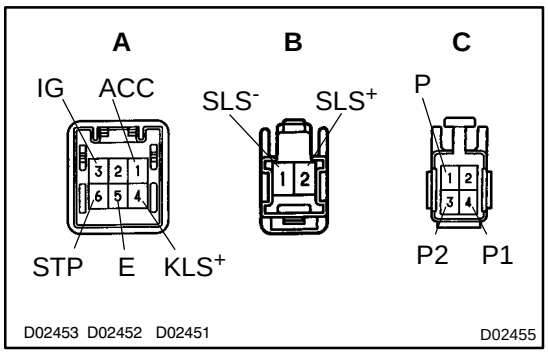

INSPECTION

1. INSPECT SHIFT LOCK CONTROL UNIT ASSEMBLY

Using a voltmeter, measure the voltage at each terminal.

HINT:

Do not disconnect the shift lock control unit assembly connector.

Terminal No. (Symbols)	Measuring Condition	Voltage (V)
1 (ACC) - 5 (E)	Ignition switch ACC	10 - 14
3 (IG) - 5 (E)	Ignition switch ON	10 - 14
6 (STP) - 5 (E)	Depressing brake pedal	10 - 14
4 (KLS^+) - 5 (E)	4. Ignition switch ACC and P position 5. Ignition switch ACC and except P position 6. Ignition switch ACC and except P position (After approx. 1 second)	0 7.5 - 11 6 - 9
2 (SLS^+) - 1 (SLS^-)	1. Ignition switch ACC and P position 2. Depress brake pedal 3. Except P position	0 8.5 -13.5 0
4 (P1) - 1 (P)	1. Ignition switch ON, P position and depress brake pedal 2. Shift except P position under condition above	0 9 - 13.5
3 (P2) - 1 (P)	1. Ignition switch ACC and P position 2. Shift except P position under condition above	9 - 13.5 0

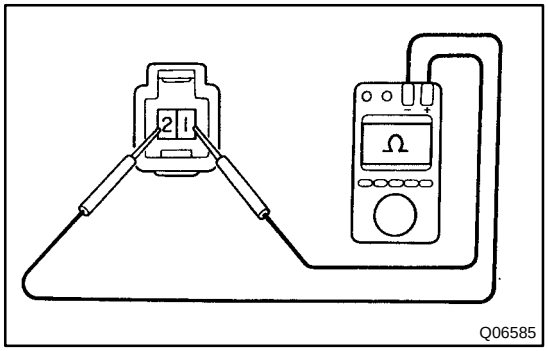

2. INSPECT SHIFT LOCK SOLENOID

(a) Disconnect the solenoid connector.

(b) Using an ohmmeter, measure resistance between terminals.

Standard resistance: 29 - 35 Ω

If resistance value is not as specified, replace the solenoid.

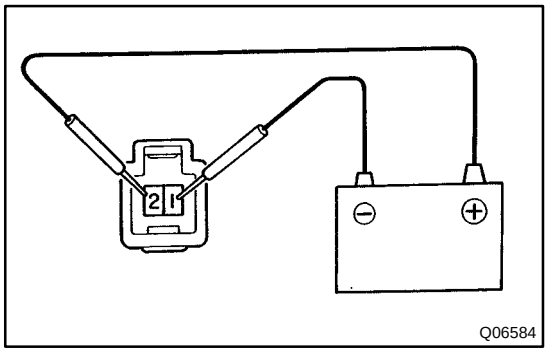

(c) Supply battery positive voltage between terminals. Check that an operation noise can be heard from the solenoid.

If the solenoid does not operate, replace the solenoid.

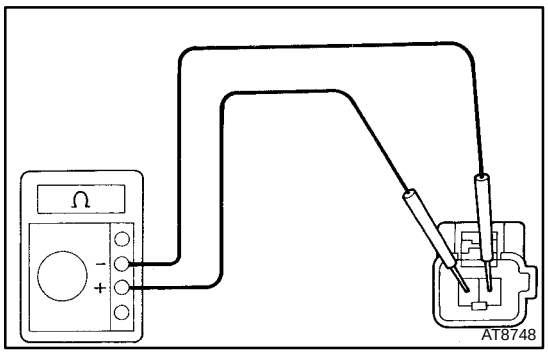

3. INSPECT KEY INTERLOCK SOLENOID

(a) Disconnect the solenoid connector.

(b) Using an ohmmeter, measure the resistance between terminals.

Standard resistance: 12.5 -16.5 Ω

If resistance value is not as specified, replace the solenoid.

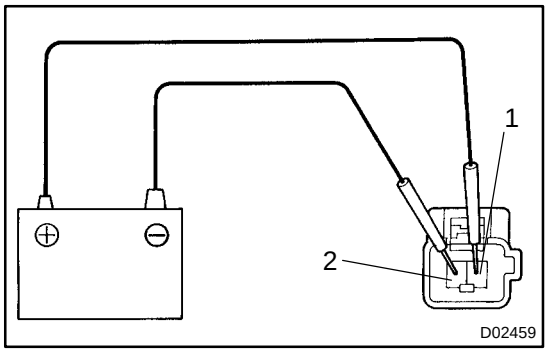

(c) Supply battery positive voltage between terminals.

If the solenoid does not operate, replace the solenoid.

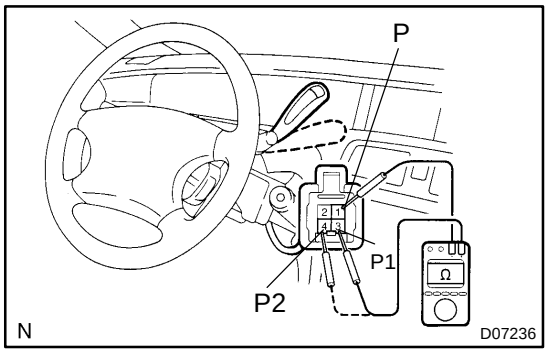

4. INSPECT SHIFT LOCK CONTROL SWITCH

Inspect that continuity between at each terminal.

Shift position	Tester connection	Specified value
P position (Release button is not pushed)	3 (P1) - 1 (P)	Continuity
P position (Release button is pushed)	3 (P1) - 1 (P) 4 (P2) - 1 (P)	Continuity
R, N, D, 2, L position	4 (P2) - 1 (P)	Continuity

If continuity is not specified, replace the switch.

SHIFT LOCK SYSTEM (Column Shift)

AX03T-04

LOCATION

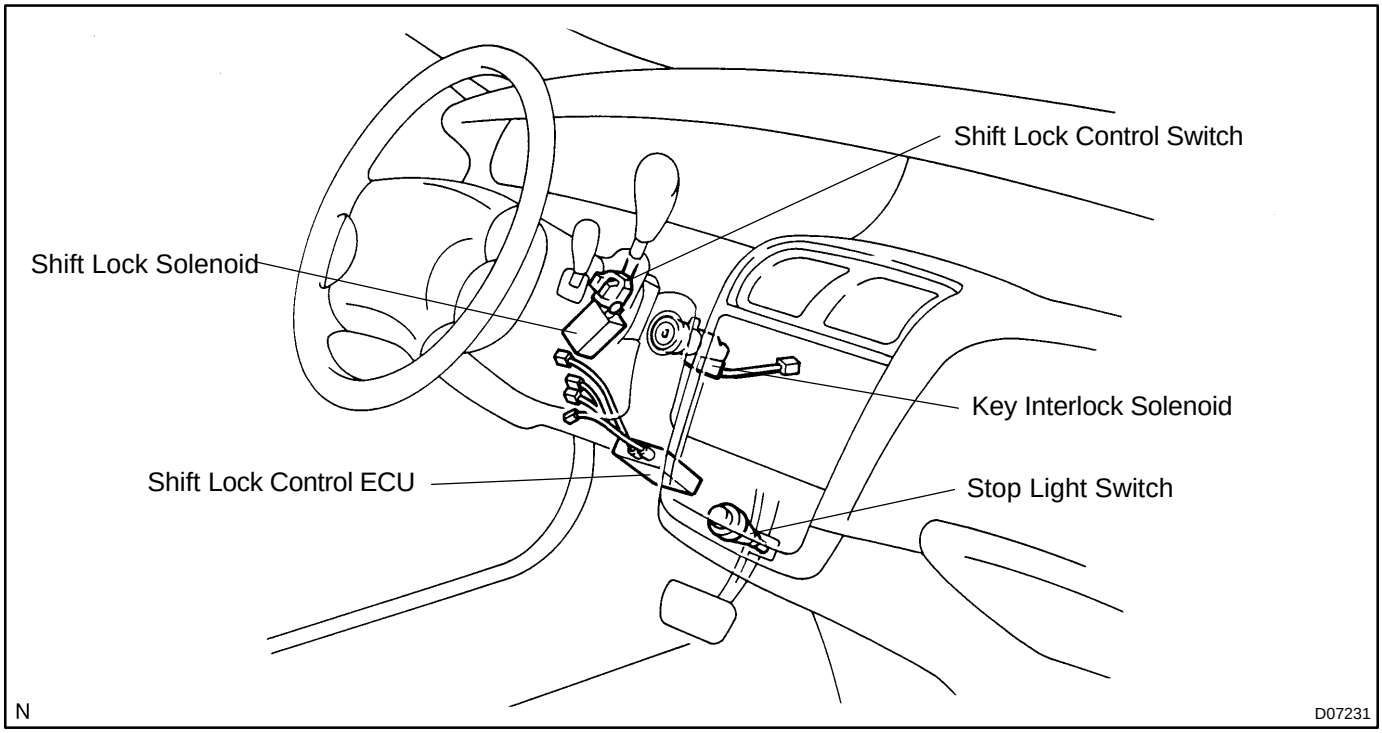

AX0CT-02

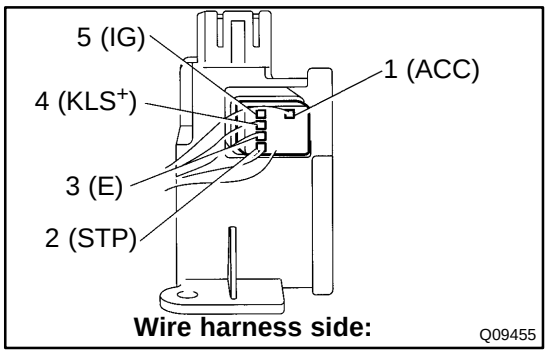

INSPECTION

1. INSPECT SHIFT LOCK CONTROL UNIT ASSEMBLY

Using a voltmeter, measure the voltage at each terminal.

HINT:

Do not disconnect the shift lock control unit assembly connector.

Terminal (Symbol)	Measuring Condition	Voltage (V)
1 (ACC) - 3 (E)	Ignition switch ACC	10 - 14
5 (IG) - 3 (E)	Ignition switch ON	10 - 14
2 (STP) - 3 (E)	Depressing brake pedal	10 - 14
4 (KLS+) - 3 (E)	(1) Ignition switch ACC and P position (2) Ignition switch ACC and except P position (3) Ignition switch ACC and except P position (After approx. 1 second)	0 7.5 - 11 6 - 9.5

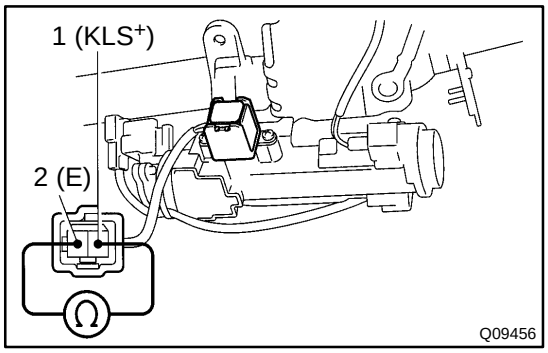

2. INSPECT KEY INTERLOCK SOLENOID

(a) Disconnect the solenoid connector.

(b) Using an ohmmeter, measure resistance between terminals.

Standard resistance: 14.5 ± 1.5 Ω

If resistance value is not as specified, replace the solenoid.

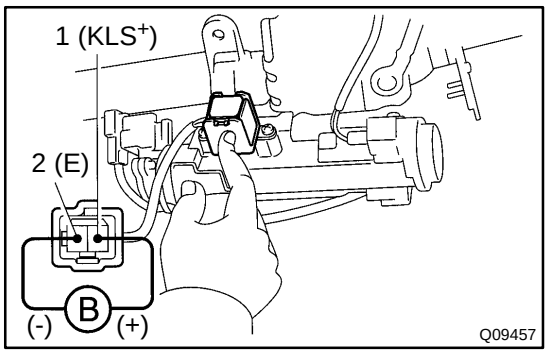

(c) Apply battery positive voltage between terminals. Check that an operation noise can be heard from the solenoid.

If the solenoid does not operated, replace the solenoid.

SHIFT LOCK SYSTEM (Floor Shift)

AX0CS-02

LOCATION

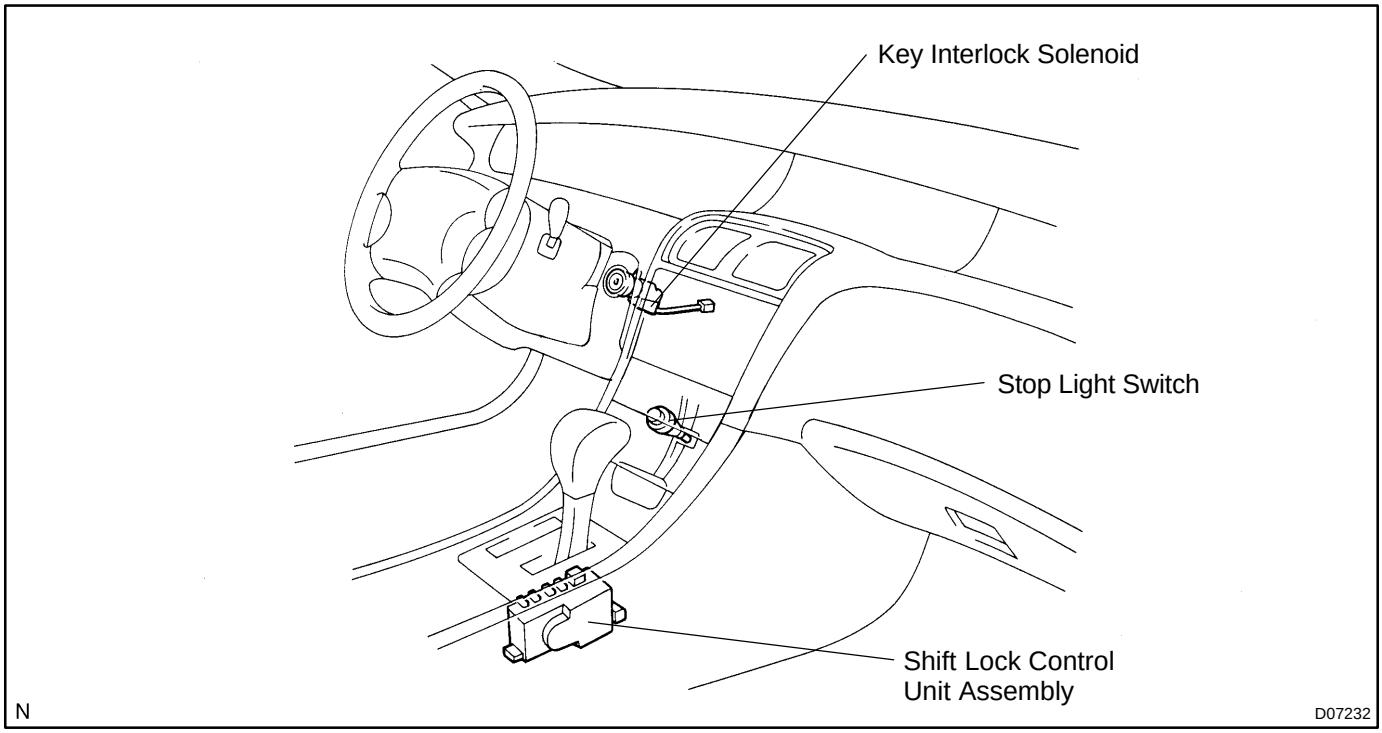

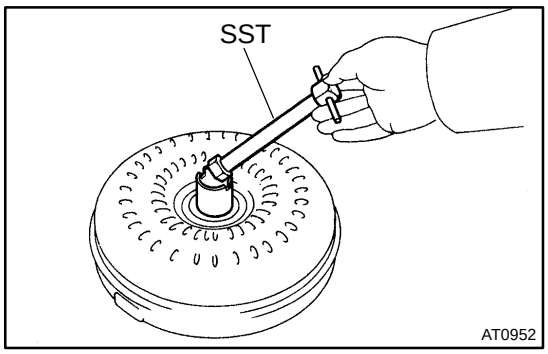

TORQUE CONVERTER CLUTCH AND DRIVE PLATE

AX040-04

INSPECTION

1. INSPECT ONE-WAY CLUTCH

(a) Install SST into the inner race of the one-way clutch.
SST 09350-32014 (09351-32010)

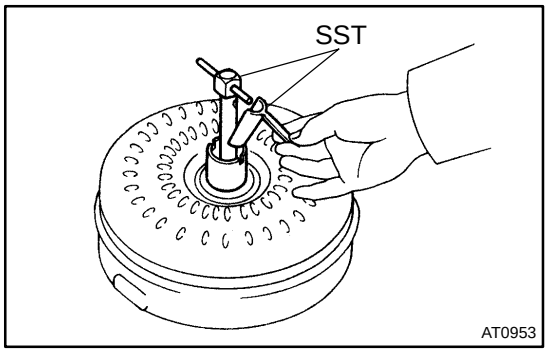

(b) Install SST so that it fits in the notch of the converter clutch hub and outer race of the one-way clutch.
SST 09350-32014 (09351-32020)

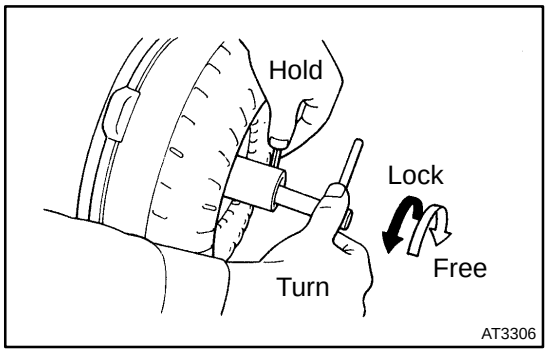

(c) With the torque converter clutch standing on its side, the clutch locks when turned counterclockwise, and rotates freely and smoothly clockwise.

If necessary, clean the converter and retest the clutch.
Replace the converter if the clutch still fails the test.

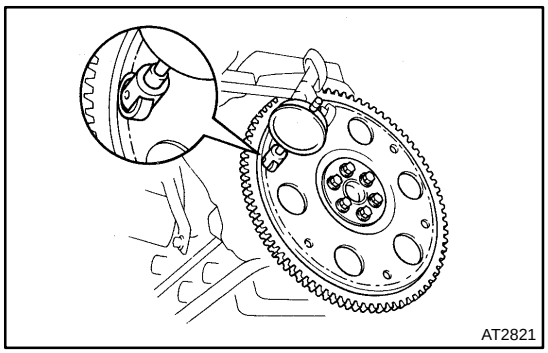

2. MEASURE DRIVE PLATE RUNOUT AND INSPECT RING GEAR

(a) Set up a dial indicator, and measure the drive plate runout.

(b) Check the damage of the ring gear.
Maximum runout: 0.20 mm (0.0079 in.)

If the runout is not within the specification or ring gear is damaged, replace the drive plate.
Torque: 83 N·m (850 kgf·cm, 61 ft·lbf)

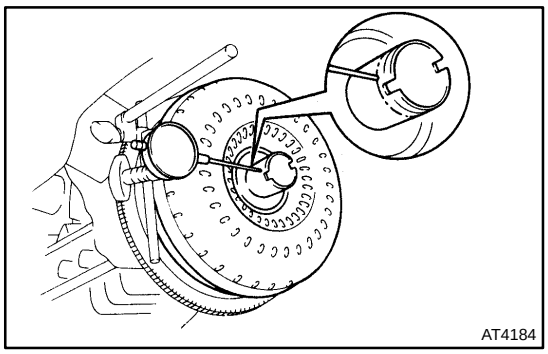

3. MEASURE TORQUE CONVERTER CLUTCH SLEEVE RUNOUT

(a) Temporarily mount the torque converter clutch to the drive plate. Set up a dial indicator and measure the torque converter clutch sleeve runout.

Maximum runout: 0.30 mm (0.0118 in.)

If the runout is not within the specification, try to correct by reorienting the installation of the converter clutch.

HINT:

Mark the position of the converter clutch to ensure the correct installation.

(b) Remove the torque converter clutch.

THROTTLE CABLE

AX03R-05

ON-VEHICLE REPAIR

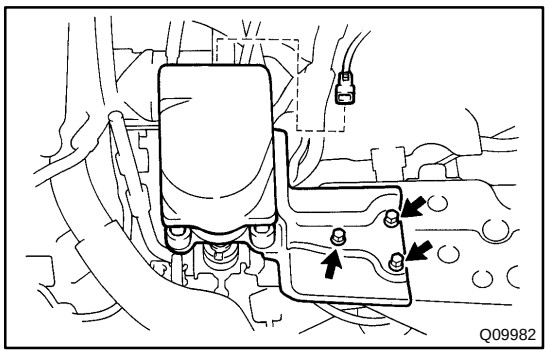

1. REMOVE BATTERY

2. REMOVE CRUISE CONTROL ACTUATOR

(a) Remove the 3 bolts and cruise control actuator.

(b) Disconnect the connector.

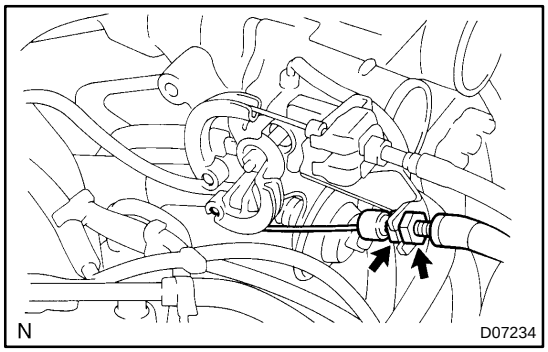

3. DISCONNECT THROTTLE CABLE FROM ENGINE

Disconnect the cable from the throttle linkage.

4. REMOVE PARK/NEUTRAL POSITION SWITCH (See page AX-4)

5. REMOVE VALVE BODY (See page AX-6)

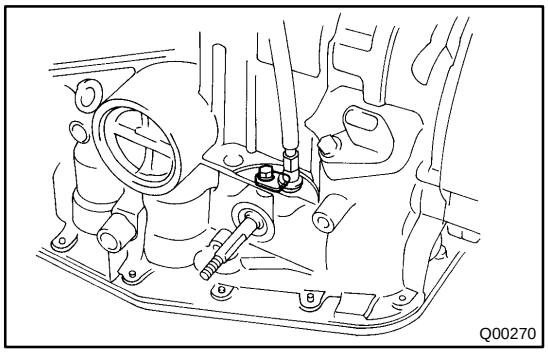

6. REMOVE THROTTLE CABLE

(a) Remove the bolt and retaining plate.

(b) Pull out the cable from the transaxle case.

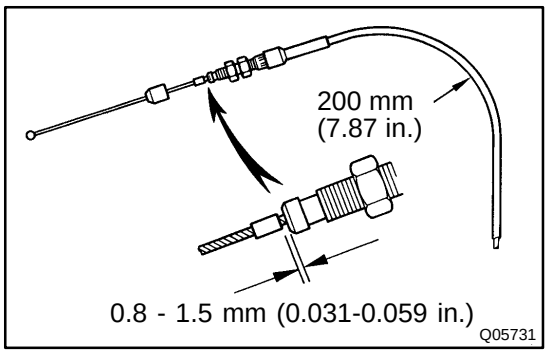

7. INSTALL THROTTLE CABLE

If the throttle cable is new, do the following operations (a) - (b).

(a) Bend the cable so there is a radius of about 200 mm (7.87 in.).

(b) Pull the inner cable lightly until slight resistance is felt, and hold it there.

(c) Stake the stopper, 0.8-1.5 mm (0.031-0.059 in.) from the end of outer cable.

(d) Install a new O-ring to the throttle calbe.

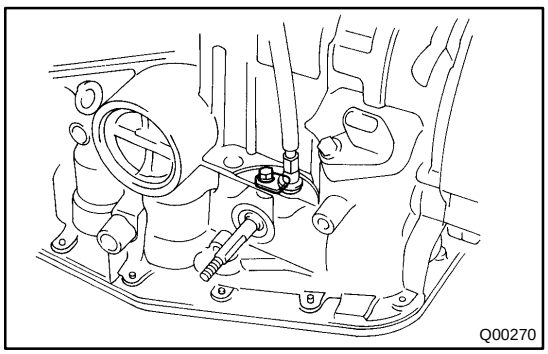

(e) Make sure to push it in all the way.

(f) Install the retaining plate and bolt.
Torque: 5.4 N·m (55 kgf·cm, 48 in.·lbf)

8. INSTALL VALVE BODY (See page AX-6)

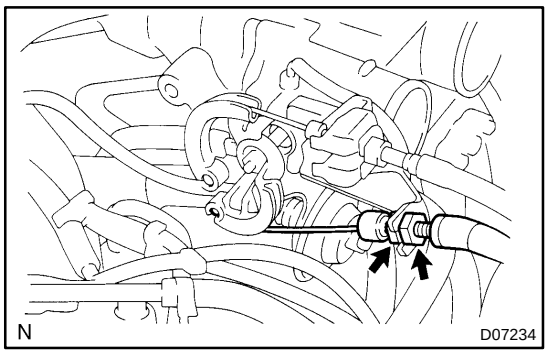

9. CONNECT THROTTLE CABLE TO ENGINE
Torque: 15 N·m (150 kgf·cm, 11 ft·lbf)

10. ADJUST THROTTLE CABLE (See page DI-160)

11. INSTALL PARK/NEUTRAL POSITION SWITCH (See page AX-4)

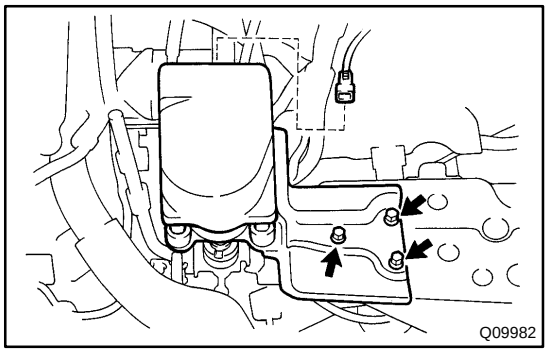

12. INSTALL CRUISE CONTROL ACTUATOR

(a) Install the cruise control actuator with the 3 bolts.
Torque: 13 N·m (130 kgf·cm, 9 ft·lbf)

(b) Connect the connector.

13. INSTALL BATTERY

14. TEST DRIVE VEHICLE

VALVE BODY ASSEMBLY

AX05D-03

ON-VEHICLE REPAIR

1. CLEAN TRANSAXLE EXTERIOR

To help prevent contamination, clean the exterior of the transaxle.

2. DRAIN ATF

Using a hexagon wrench, remove the drain plug and drain the fluid into the suitable container.

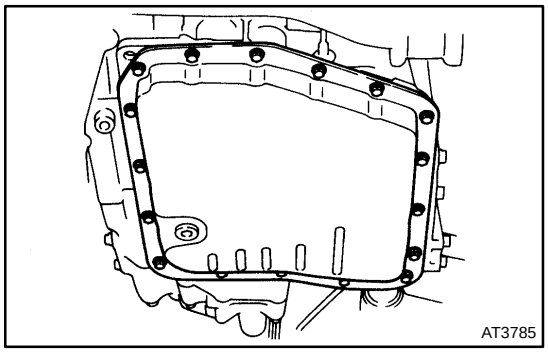

3. REMOVE OIL PAN AND GASKET

NOTICE:

Some fluid will remain in the oil pan.

Remove oil pan bolts, and carefully remove the pan assembly. Discard the gasket.

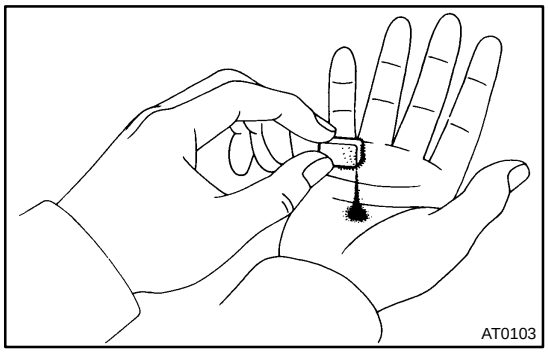

4. EXAMINE PARTICLES IN PAN

Remove the magnets and use them to collect any steel chips. Look at the chips and particles in the pan and magnet carefully to anticipate what type of wear you will find in the transaxle.

- ★ Steel (magnetic): bearing, gear and plate wear
- ★ Brass (non-magnetic): bushing wear

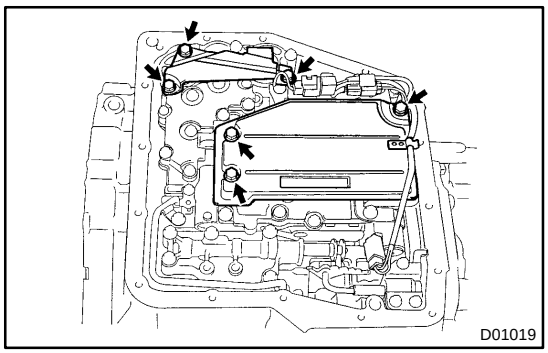

5. REMOVE OIL STRAINER AND APPLY PIPE BRACKET

(a) Remove the 3 bolts and oil strainer.

NOTICE:

Be careful as oil will come out of the strainer when it is removed.

(b) Remove the 3 bolts and apply pipe bracket.

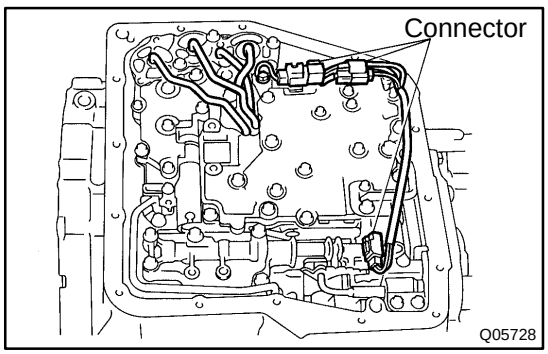

6. REMOVE OIL PIPE

Pry up both pipe ends with a large screwdriver and remove the 5 pipes.

7. DISCONNECT 3 SOLENOID CONNECTORS

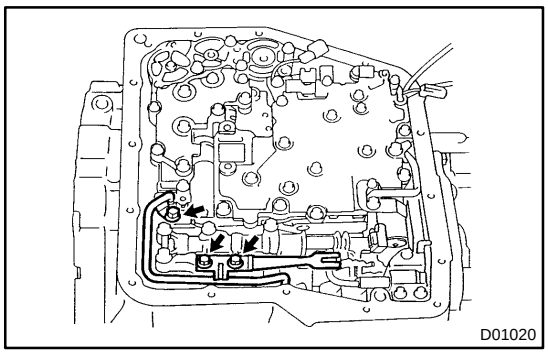

8. REMOVE DETENT SPRING AND OIL PIPE

(a) Remove the 2 bolts and detent spring.
(b) Remove the bolt.
(c) Pry up the pipe with a screwdriver and remove the pipe.

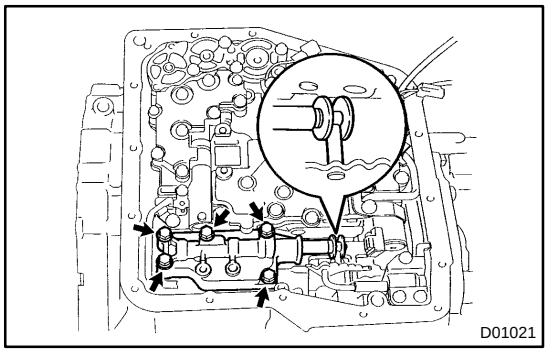

9. REMOVE MANUAL VALVE BODY

Remove the 5 bolts and manual valve body.

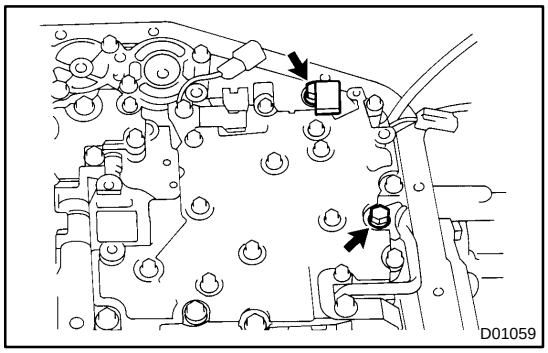

10. REMOVE CONNECTOR CLAMP AND PIPE RETAINER

Remove the 2 bolts, connector clamp and pipe retainer.

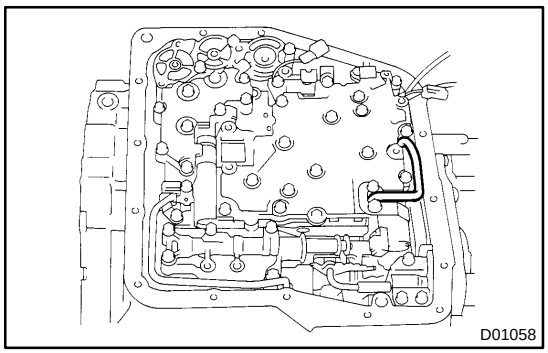

11. REMOVE B_3 APPLY PIPE

Pry up the pipe with a screwdriver and remove the pipe.

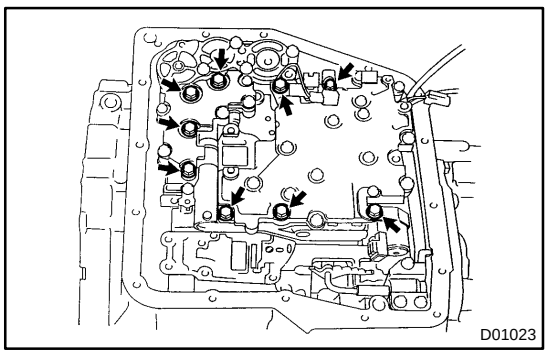

12. REMOVE VALVE BODY

(a) Remove the 9 bolts.

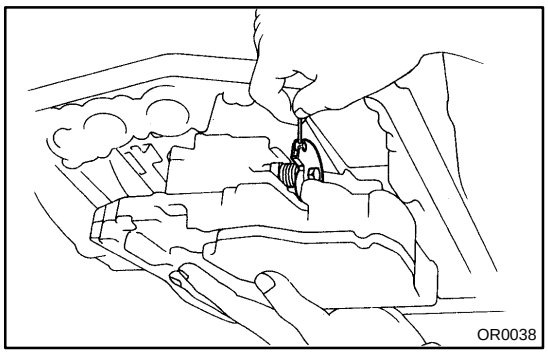

(b) Disconnect the throttle cable from the cam and remove the valve body.

13. REMOVE 2ND BRAKE APPLY GASKET

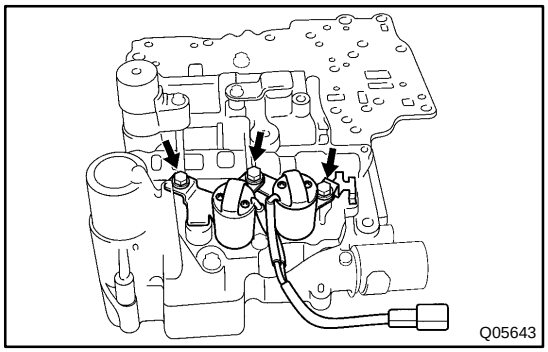

14. REMOVE SHIFT SOLENOID VALVE

(a) Remove the 3 bolts, shift solenoid valve No.1 and No.2 with the retainer.

NOTICE:

When removing solenoid, do not use a screwdriver, etc. to pry up the solenoid.

(b) Remove the O-rings from the shift solenoid valve No.1 and No.2.

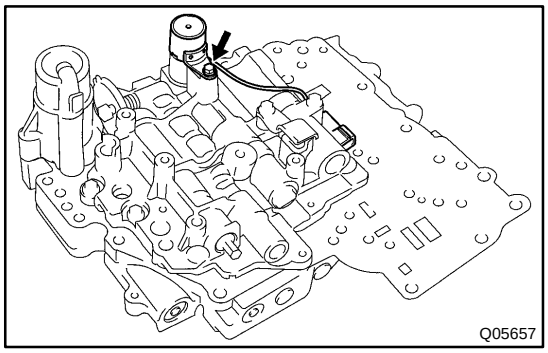

(c) Remove the bolt and shift solenoid valve SL.

(d) Remove the 2 O-rings from the shift solenoid valve SL.

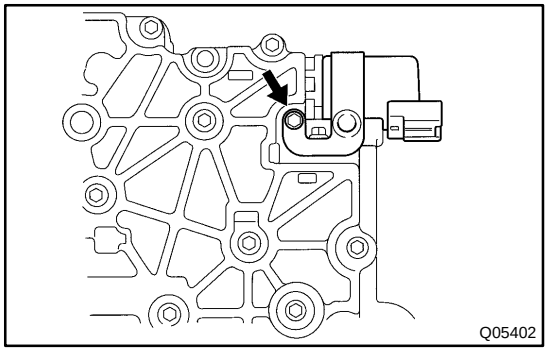

(e) Remove the bolt and shift solenoid valve SLN.

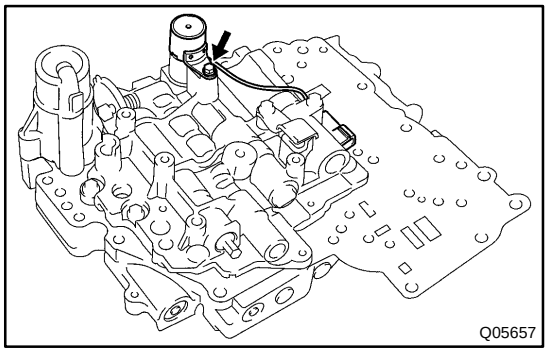

15. INSTALL SOLENOID VALVE

(a) Coat 2 new O-rings with ATF and install it to the shift solenoid valve SL.

(b) Install the shift solenoid valve SL with the bolt.

Torque: 6.6 N·m (67 kgf·cm, 58 in.·lbf)

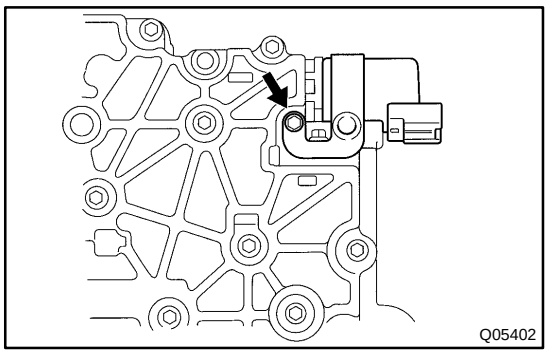

(c) Install the shift solenoid valve SLN with the bolt.
Torque: 6.6 N·m (67 kgf·cm, 58 in.·lbf)

(d) Coat 2 new O-rings with ATF and install them to the shift solenoid valve No.1 and No.2.

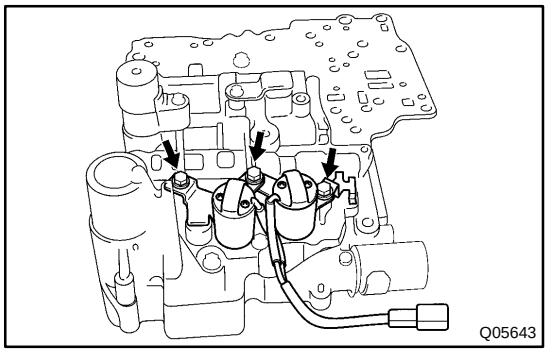

(e) Install the shift solenoid valve No.1 and No.2 with the 3 bolts.
Torque: 6.6 N·m (67 kgf·cm, 58 in.·lbf)

16. PLACE NEW 2ND BRAKE APPLY GASKET

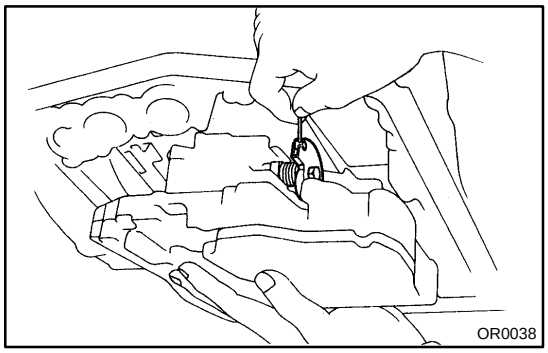

17. INSTALL VALVE BODY TO TRANSAXLE CASE

(a) While holding the cam down with your hand, slip the cable end into the slot.

NOTICE:
Be careful not to entangle the solenoid wire.

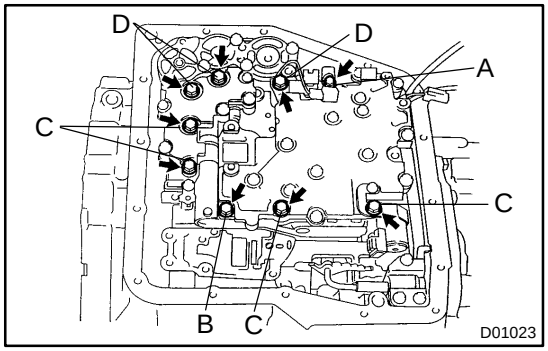

(b) Install the valve body with the 9 bolts.
Torque: 11 N·m (110 kgf·cm, 8 ft·lbf)

HINT:
Temporarily install the 9 bolts first, then torque them.
Bolt length:
Bolt A: 30 mm (1.181 in.)
Bolt B: 43 mm (1.693 in.)
Bolt C: 48 mm (1.890 in.)
Bolt D: 52 mm (2.047 in.)

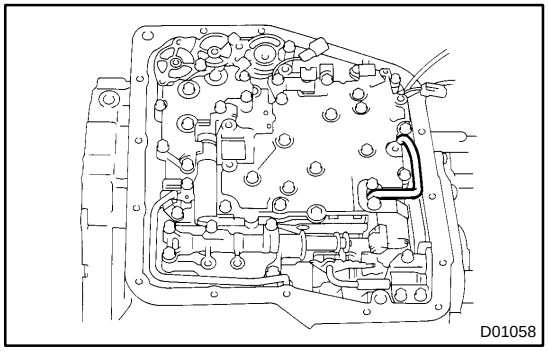

18. INSTALL B_3 APPLY PIPE

Using a plastic hammer, install the pipe into the position indicated in the illustration.

NOTICE:
Be careful not to bend or damage the pipe.

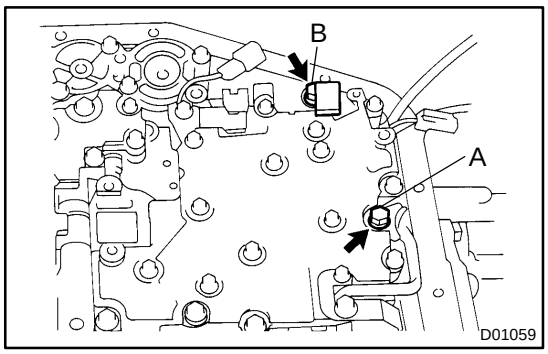

19. INSTALL CONNECTOR CLAMP AND PIPE RETAINER

Install the connector clamp and pipe retainer with the 2 bolts.

Torque: 6.6 N·m (67 kgf·cm, 58 in.·lbf)
Bolt length:
Bolt A: 48 mm (1.890 in.)
Bolt B: 39 mm (1.535 in.)

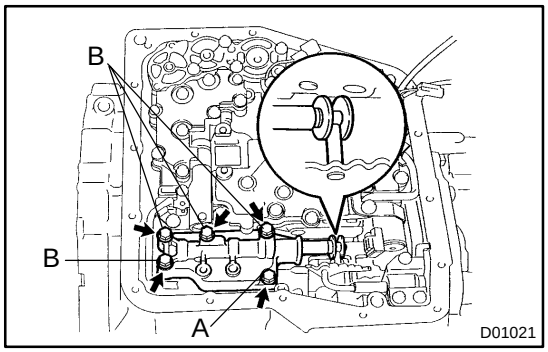

20. INSTALL MANUAL VALVE BODY

(a) Aligning the valve body with the pin on the manual shaft lever.
(b) Lower the manual valve body into place.
(c) Temporarily the 5 bolts first. Then, tighten them with a torque wrench.

Torque: 11 N·m (110 kgf·cm, 8 ft·lbf)
Bolt length:
Bolt A: 22 mm (0.866 in.)
Bolt B: 37 mm (1.457 in.)

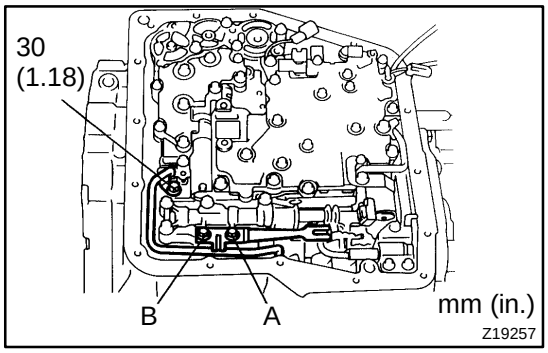

21. INSTALL DETENT SPRING AND OIL PIPE

(a) Place the detent springs on the manual valve body and temporarily install the 2 bolts first. Then, tighten them with a torque wrench.

Torque: 11 N·m (110 kgf·cm, 8 ft·lbf)
Bolt length:
Bolt A: 14 mm (0.551 in.)
Bolt B: 37 mm (1.457 in.)

(b) Check that the manual valve lever is touching the center of the detent spring tip roller.
(c) Using a plastic hammer, install the pipe into the position.

NOTICE:
Be careful not to bend or damage the pipe.

(d) Install the bolt.

Torque: 10 N·m (100 kgf·cm, 7 ft·lbf)

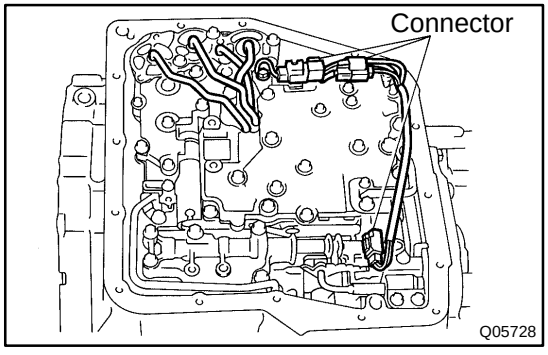

22. CONNECT 3 SOLENOID CONNECTORS
23. INSTALL OIL PIPE

Using a plastic hammer, install the pipes into the positions.

NOTICE:
Be careful not to bend or damage the pipes.

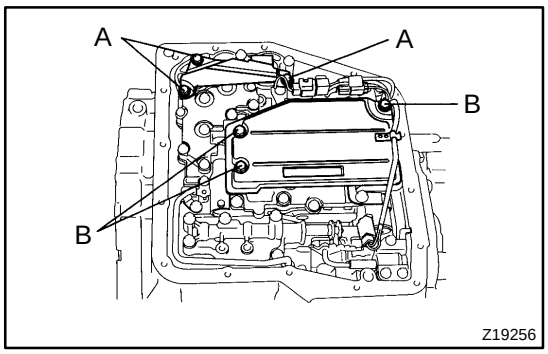

24. INSTALL OIL STRAINER AND APPLY PIPE BRACKET

Install the oil strainer and apply pipe bracket with the 6 bolts.

Torque:
Bolt A: 10 N·m (100 kgf·cm, 7 ft·lbf)
Bolt B: 11 N·m (110 kgf·cm, 8 ft·lbf)
Bolt length:
Bolt A: 22 mm (0.866 in.)
Bolt B: 53 mm (2.087 in.)

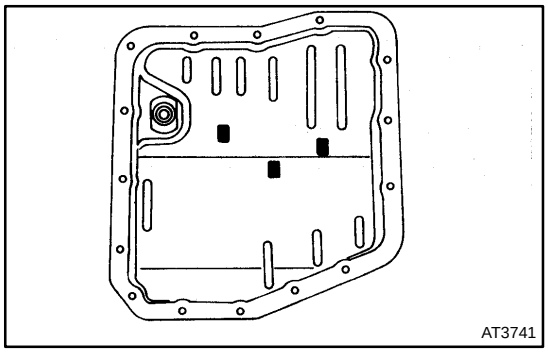

25. INSTALL MAGNET IN PLACE

Install the 3 magnets in the indentations of the oil pan, as shown in the illustration.

NOTICE:

Make sure that the magnet does not interfere with the oil pipes.

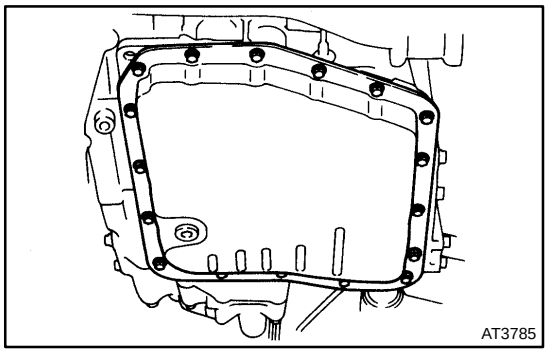

26. INSTALL OIL PAN AND GASKET

(a) Install the oil pan and a new gasket.
(b) Install the 17 bolts.

Torque: 7.8 N·m (80 kgf·cm, 69 in.·lbf)

27. INSTALL DRAIN PLUG

Install a new gasket and drain plug.

Torque: 49 N·m (500 kgf·cm, 36 ft·lbf)

28. FILL ATF AND CHECK FLUID LEVEL

(See page DI-160)

AUDIO SYSTEM

BE214-01

DESCRIPTION

OUTLINE OF AVC-LAN

(a) What is AVC-LAN?

AVC-LAN is the abbreviation, which stands for Audio Visual Communication-Local Area Network. This is a unified standard co-developed by 6 audio manufactures associated with Toyota Motor Corporation.

The Unified standard covers signals, such as audio signal, visual signal, signal for switch indication and communication signal.

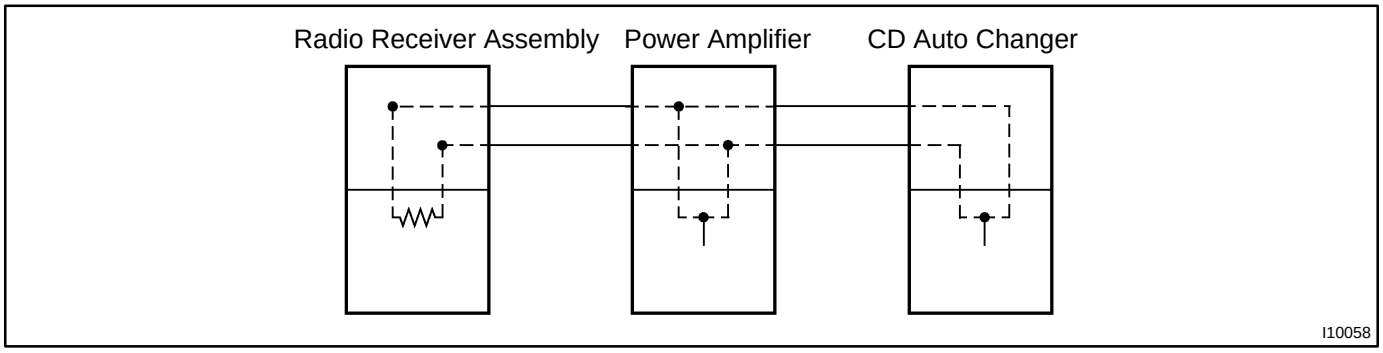

(b) Objectives

Recently the car audio system has been rapidly developed and functions have been changed drastically. The conventional system has been switched to the multi-media type such as a navigation system. At the same time the level of customers needs to audio system has been upgraded. This lies behind this standardization.

The concrete objectives are explained below.

(1) When products by different manufactures were combined together, there used to be a case that malfunction occurred such as sound did not come out. This problem has been resolved by standardization of signals.

(2) Various types of after market products have been able to add or replace freely.

(3) Because of the above (2), each manufacture has become able to concentrate on developing products in their strongest field. This has enabled many types of products provided inexpensively.

(4) Conventionally, a new product developed by a manufacture could not be used due to a lack of compatibility with other manufactures products. Because of this new standard, users can enjoy compatible products provided for them timely.

(c) The above descriptions are the objectives to introduce AVC-LAN. By this standardization, development of new products will no longer cause systematic errors. Thus, this is very effective standard for a product in the future.

HINT:

- When +B short or GND short is detected in AVC-LAN circuit, communication stops. Accordingly the audio system does not function normally.
- When audio system is not equipped with a navigation system, audio head unit is the master unit. (When audio system is equipped with a navigation system, radio receiver is the master unit.)
- The car audio system using AVC-LAN circuit has a diagnosis function.
- Each product has its own specified numbers called physical address. Numbers are also allotted to each function in one product, which are called logical address.

BE16M-03

INSPECTION

1. INSPECT POWER AMPLIFIER CIRCUIT

Connect the connector from power amplifier and inspect the connector on the wire harness side.

Power amplifier side

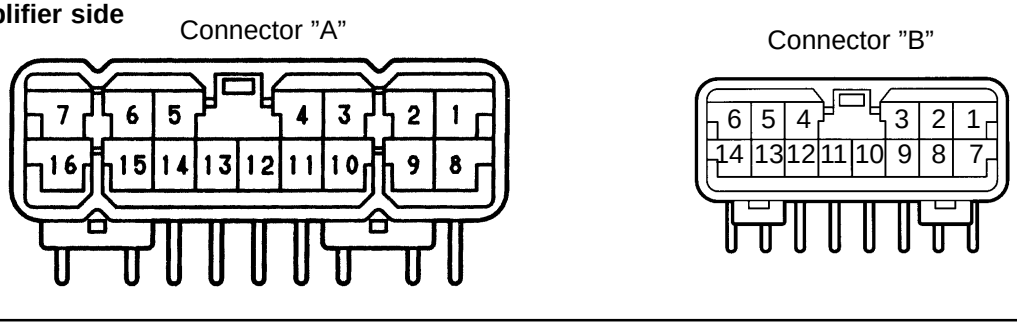

Tester connection	Condition	Specified condition
A1 - Ground (FR+)	Audio sounding	5 - 7 V
A2 - Ground (FL+)	Audio sounding	5 - 7 V
A3 - Ground (RR+)	Audio sounding	5 - 7 V
A4 - Ground (Rl+)	Audio sounding	5 - 7 V
A5 - Ground (WFl+)	Audio sounding	5 - 7 V
A7 - Ground (+B)	Constant	Battery positive voltage
A8 - Ground (FR-)	Audio sounding	5 - 7 V
A9 - Ground (FL-)	Audio sounding	5 - 7 V
A10 - Ground (RR-)	Audio sounding	5 - 7 V
A11 - Ground (RL-)	Audio sounding	5 - 7 V
A13 - Ground (GND)	Constant	Continuity
A14 - Ground (WFL-)	Audio sounding	5 - 7 V
B1 - Ground (AMP+)	Radio power switch ON	Battery positive voltage
B2 - Ground (ACC)	Ignition switch ON	Battery positive voltage
B4 - Ground (BEEP)	Audio sounding	-
B5 - Ground (FLIN)	Audio sounding	5 - 7 V
B6 - Ground (FRIN)	Audio sounding	5 - 7 V

B11 - Ground (SGND)	Constant	Continuity
B12 - Ground (MUTE)	Audio sounding	1 V or below
B13 - Ground (RLIN)	Audio sounding	5 - 7 V
B14 - Ground (RRIN)	Audio sounding	5 - 7 V

If the circuit is not as specified, inspect the circuits connected to other parts.

2. INSPECT RADIO RECEIVER ASSEMBLY CIRCUIT

Connect the connectors from the radio receiver assembly, and inspect the connector on the wire harness side.

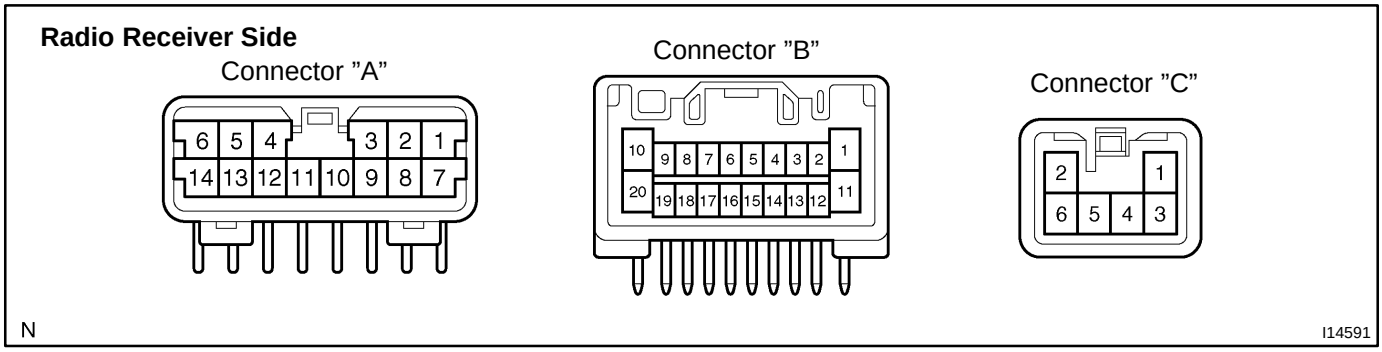

Tester connection	Condition	Specified condition
A1 - Ground (FR+)	Audio sounding	5 - 7 V
A2 - Ground (FL+)	Audio sounding	5 - 7 V
A3 - Ground (ACC, +B)	Ignition switch ACC	Battery positive voltage
A4 - Ground (BU +B)	Constant	Battery positive voltage
A5 - Ground (FR-)	Audio sounding	5 - 7 V
A6 - Ground (FL-)	Audio sounding	5 - 7 V
A7 - Ground (GND)	Constant	Continuity
A8 - Ground (ANT +B)	Radio power switch ON	Battery positive voltage
A10 - Ground (ILL+)	Headlight dimmer switch ON	Battery positive voltage
B1 - Ground (RR+)	Audio sounding	5 - 7 V
B2 - Ground (RL+)	Audio sounding	5 - 7 V
B3 - Ground (RR-)	Audio sounding	5 - 7 V
B4 - Ground (RL-)	Audio sounding	5 - 7 V
C1 - Ground (+B)	Constant	Battery positive voltage
C2 - Ground (ILL+)	Hesdlight dimmer switch ON	Battery positive voltage
C3 - Ground (AMP+)	Rasio switch ON	Battery positive voltage
C7 - Ground (MUTE)	Audio sounding	1V or below

C8 - Ground (FR+)	Audio sounding	5 - 7 V
C9 - Ground (FL+)	Audio sounding	5 - 7 V
C10 - Ground (SLD)	Constant	Continuity
C11 - Ground (ACC)	Ignition switch ON	Battery positive voltage
C13 - Ground (ANT+B)	Radio power switch ON	10 - 14V
C16 - Ground (S-GND)	Constant	Continuity
C17 - Ground (BEEP)	Audio sounding	-
C18 - Ground (RR)	Audio sounding	5 - 7 V
C19 - Ground (RL)	Audio sounding	5 - 7 V
C20 - Ground (GND)	Constant	Continuity

If the circuit is not as specified, inspect the circuits connected to other parts.

3. INSPECT GLASS IMPRINTED ANTENNA

Use same procedure as for ”INSPECT DEFOGGER WIRES” on page BE-67 .

4. REPAIR GLASS IMPRINTED ANTENNA

Use same procedure as for ”REPAIR DEFOGGER WIRES” on page BE-67 .

BE0AZ-07

LOCATION

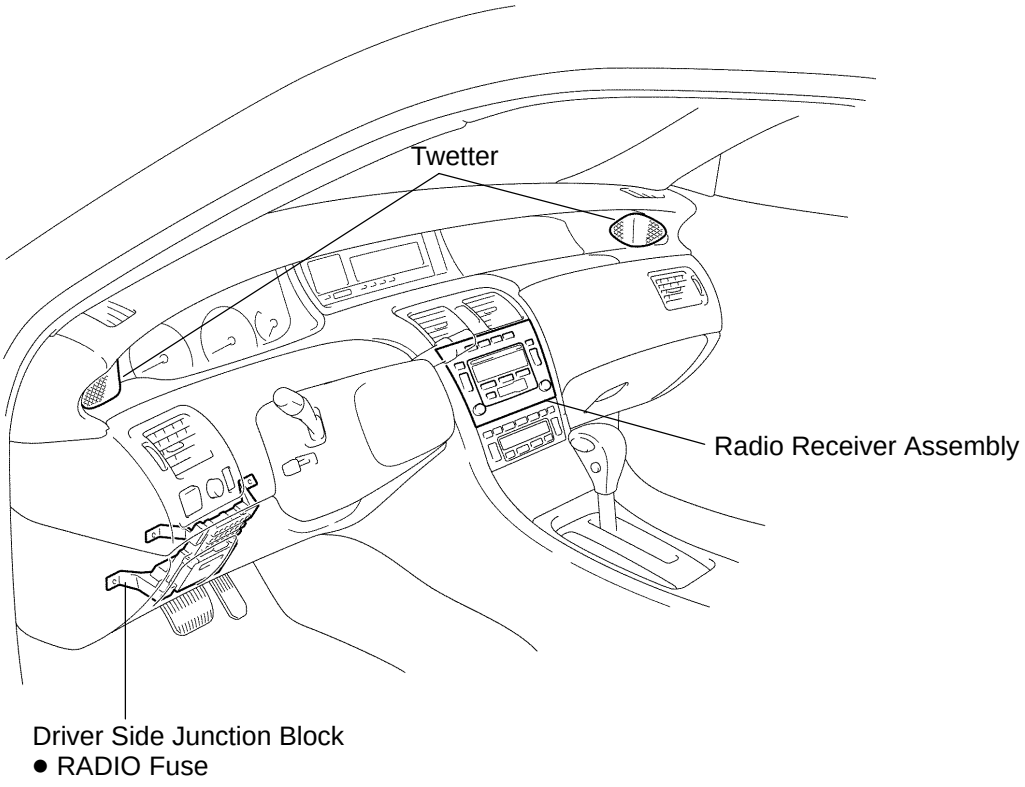

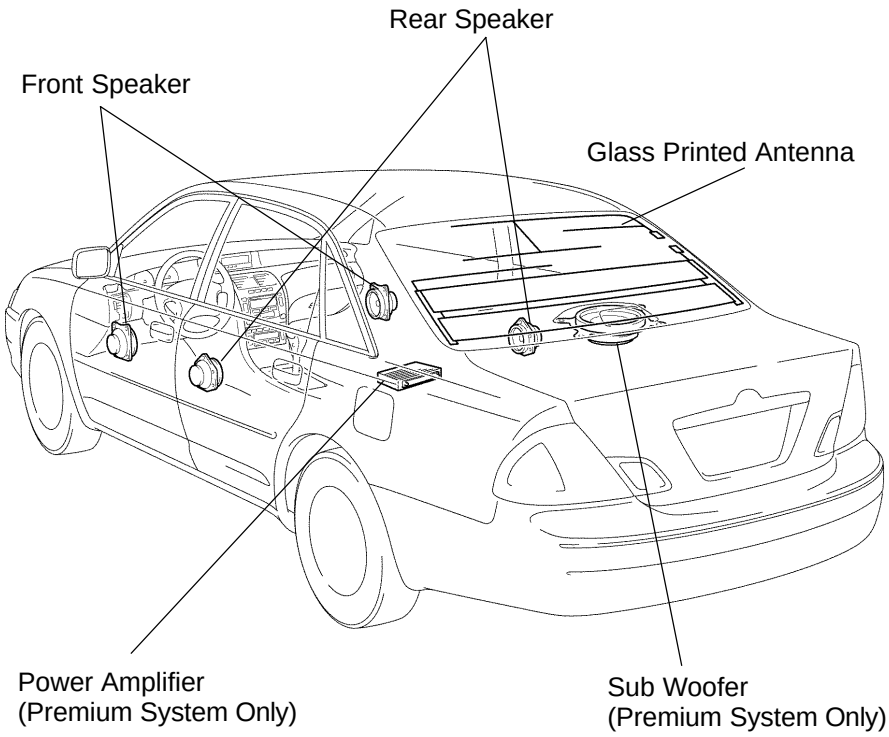

P

I12536

BE215-01

TROUBLESHOOTING

1. Europe models:

DIAGNOSIS FUNCTION

(a) Diagnosis start-up

For shifting diagnosis mode, turn ignition switch ON and push the ”DISC” switch 3 times while pressing ”ch1” and ”ch6” switches.

HINT:

To exist from the diagnosis mode, push the ”DISC” switch for 1.7 sec. or turn ignition switch to ACC or OFF.

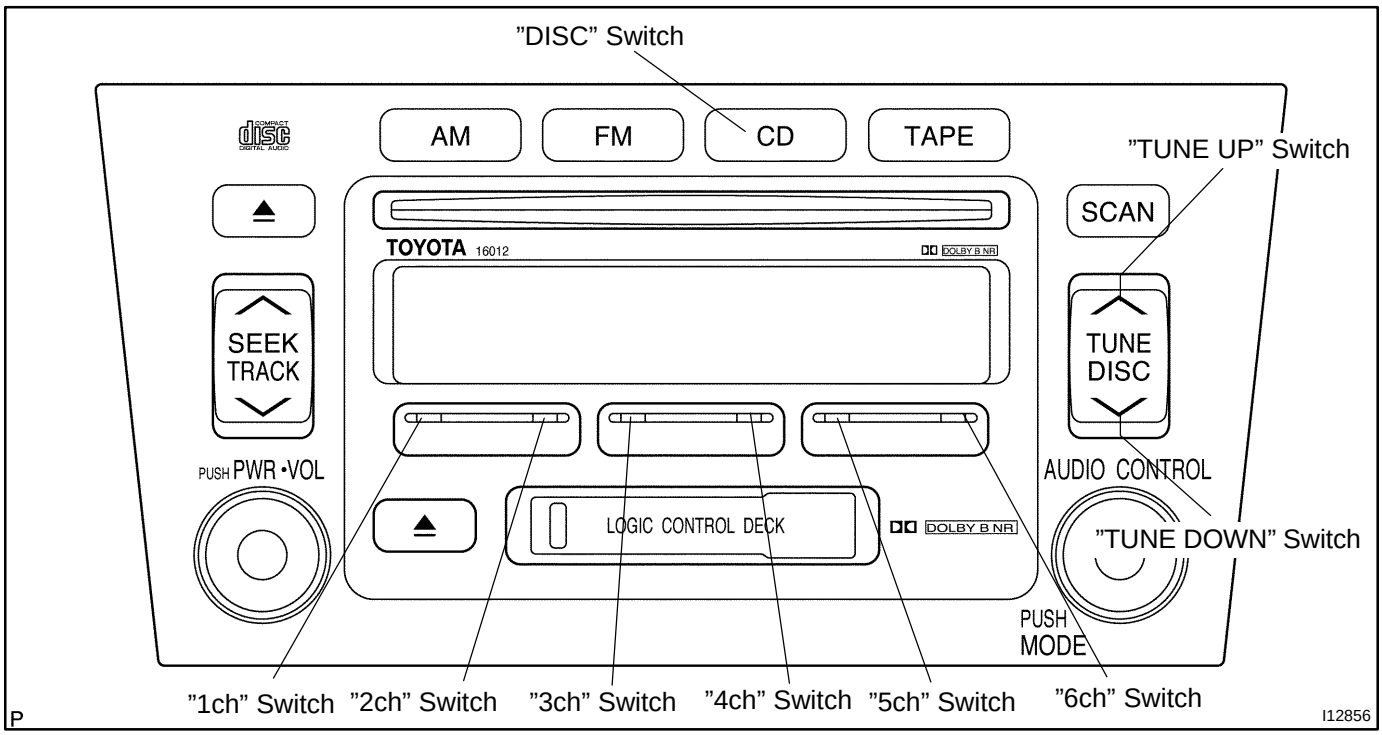

(b) Service check mode

(1) After the diagnosis start-up, the system enters service check mode.

(2) Error codes over tuner and connected equipment are displayed on the screen of tuner.

Results for each check are displayed as follows:

good:

No DTC is detected for both ”System Check Confirmation” and ”Diagnosis Memory Response”.

nCon:

The Component does not respond to the ”Diagnosis On Instruction” command.

Applicable to only the system where connected components are limited to be used.

ECHn:

Application of new version has been confirmed by the ”Diagnosis On Check”, and there is one or more DTC which indicates ”Replacement” in the ”System Check Result Response” or ”Diagnosis Memory Response”.

CHEC:

Application of new version has been confirmed by the ”Diagnosis On Check”, and there is no DTC which indicates ”Replacement” in the ”System Check Result Response” or ”Diagnosis Memory Response”, but one or more DTC which indicated ”Check” is identified.

Old:
Application of old version is confirmed by the ”Diagnosis On Check”, and DTC is identified in the ”System Check Result Response” or ”Diagnosis Memory Response”.
nrES:
No response is identified to the ”System Check Start Instruction” and ”Request for System Check Result” commands.

HINT:

Check the present and past condition of components by performing the System Check and collecting stored DTC memories.
Check results shall be displayed as one of six following indications: ”good”, ”ECHn”, ”CHEC”,”nCon”, ”Old” or ”nrES”.

(c) Display Screen for Service Check.

Example:

Connection parts (physical address): Radio receiver (P190), CD Auto Changer (P240), MD chnger (P3A0)

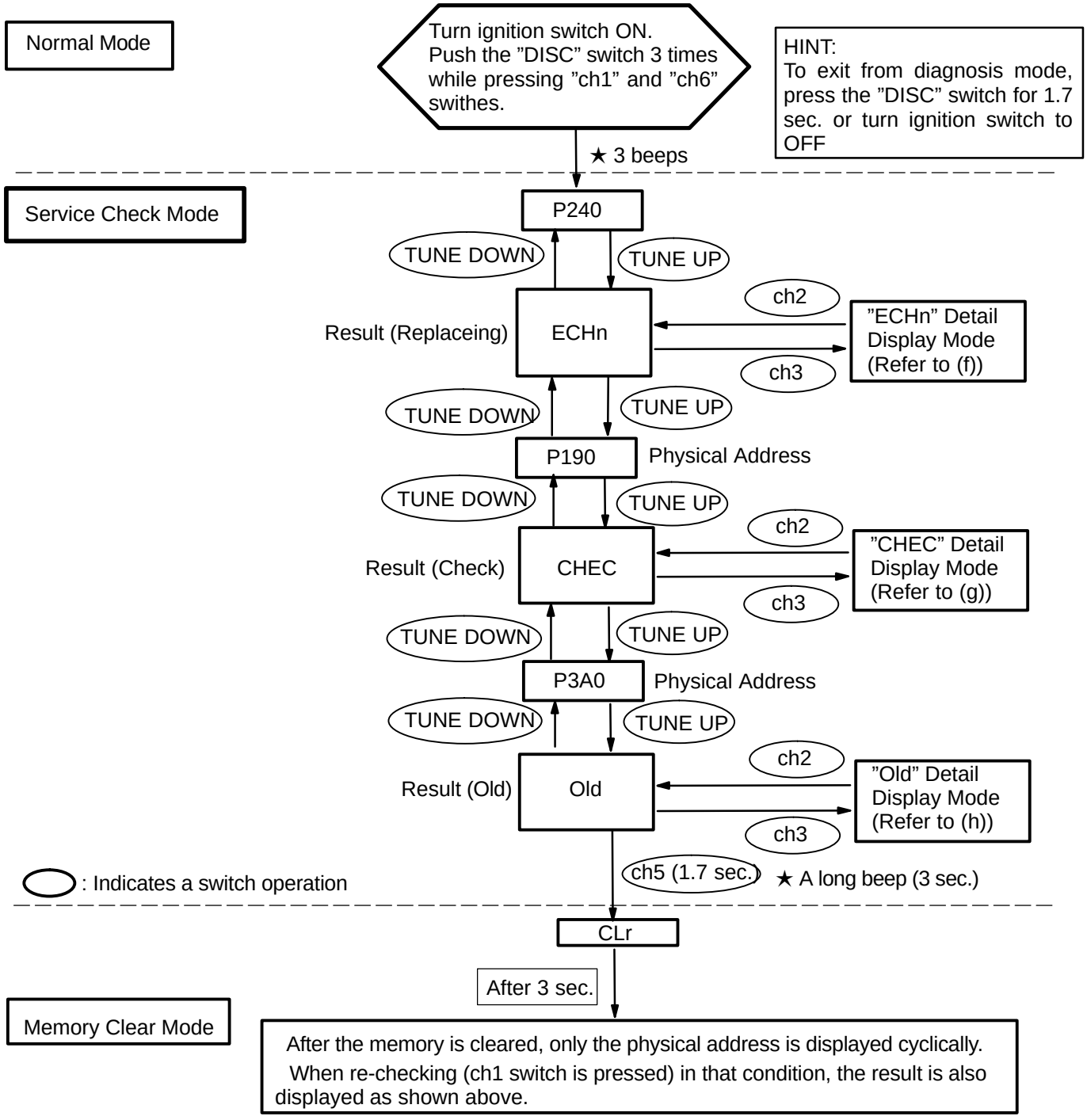

(d) ”ECHn” Detail Display Mode Screen

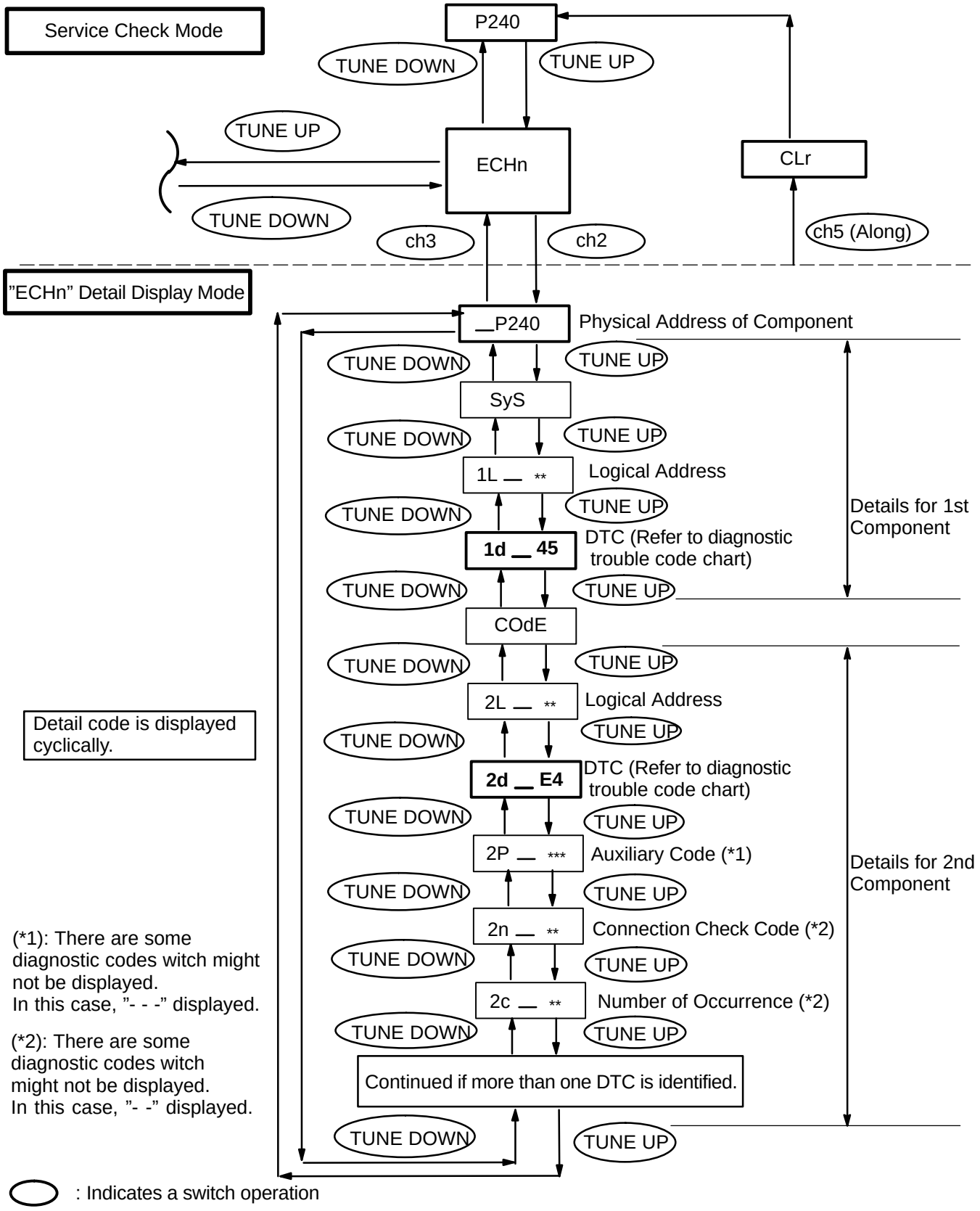

(e) ”CHEC” Detail Display Mode Screen

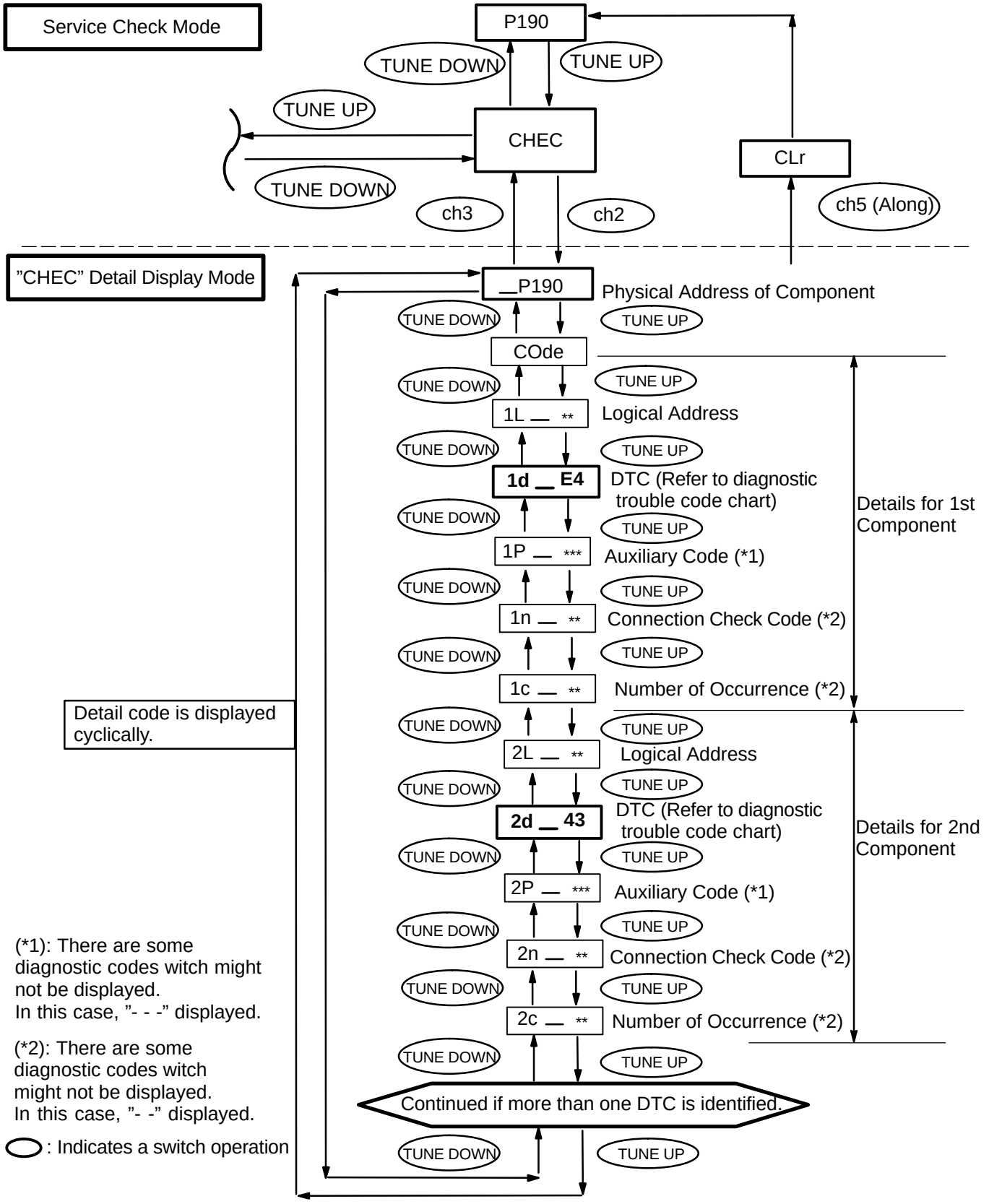

(f) ”Old” Detail Display Mode Screen

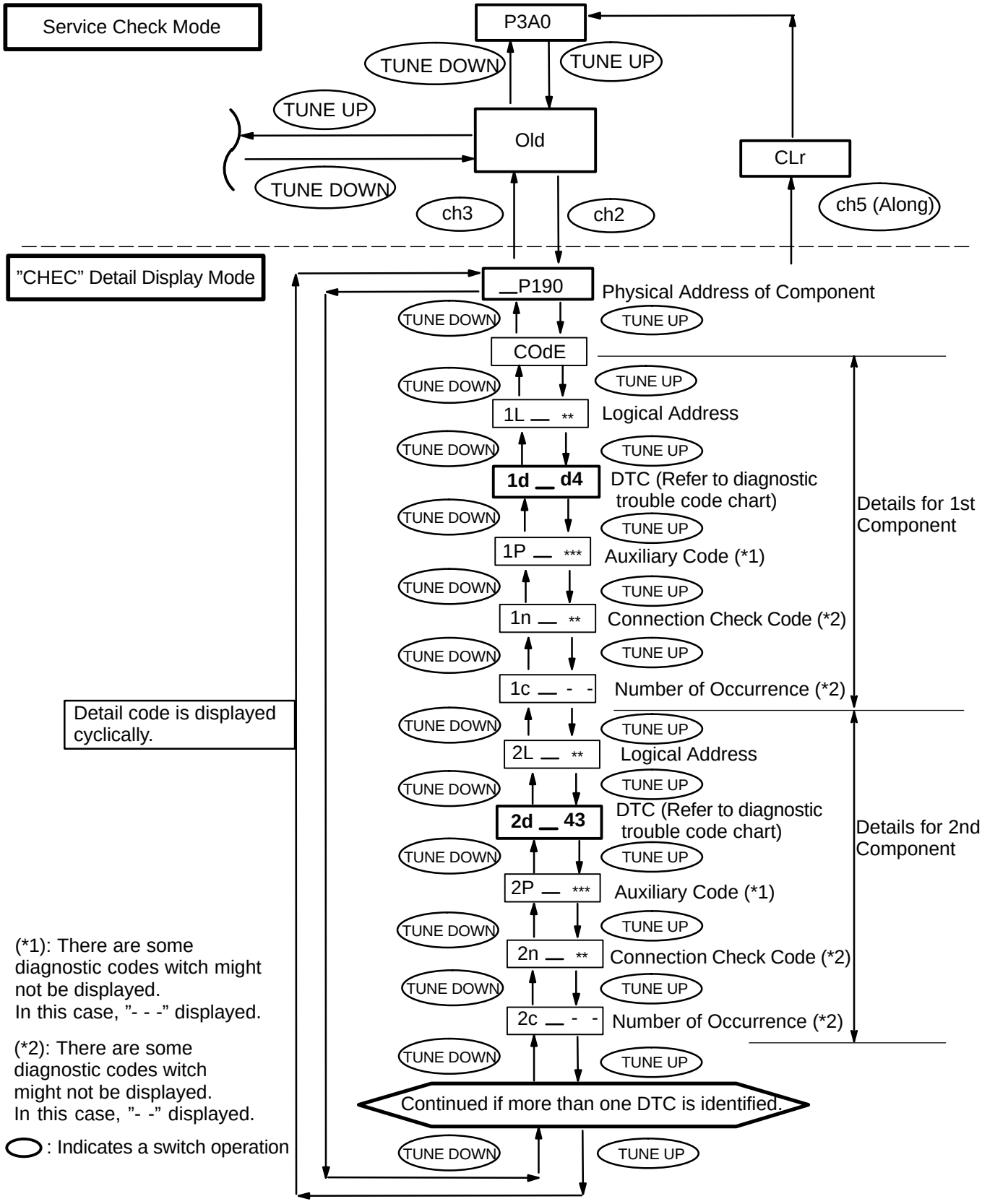

2. Except Europe models:
DIAGNOSIS FUNCTION

Error codes over tuner and connected equipment are displayed on the screen of tuner.

(a) Diagnosis start-up

For shifting to diagnosis mode, push ”DISC” switch 3 times with pressing ”1” and ”6” of PRESET switch at the same time while the audio power is OFF and ACC is ON.

To exit from diagnosis mode, press ”DISC” switch for 2 seconds or turn the ignition key OFF.

(When ”1-190” is displayed, the mode is transferred to LAN check mode.)

(b) LAN check

When starting up the diagnosis mode, the mode turns to LAN check mode, the screen displays the code numbers (physical address) of tuner and connected equipment. Smaller codes are displayed in order, displayed code numbers are switched by operating TUNE ”UP” or ”DOWN” switch. In LAN check mode, by pressing ”5” of PRESET switch for more than 2 secs., diagnosis memory of each equipment can be deleted, when deletion is completed, the mode returns to LAN check mode.

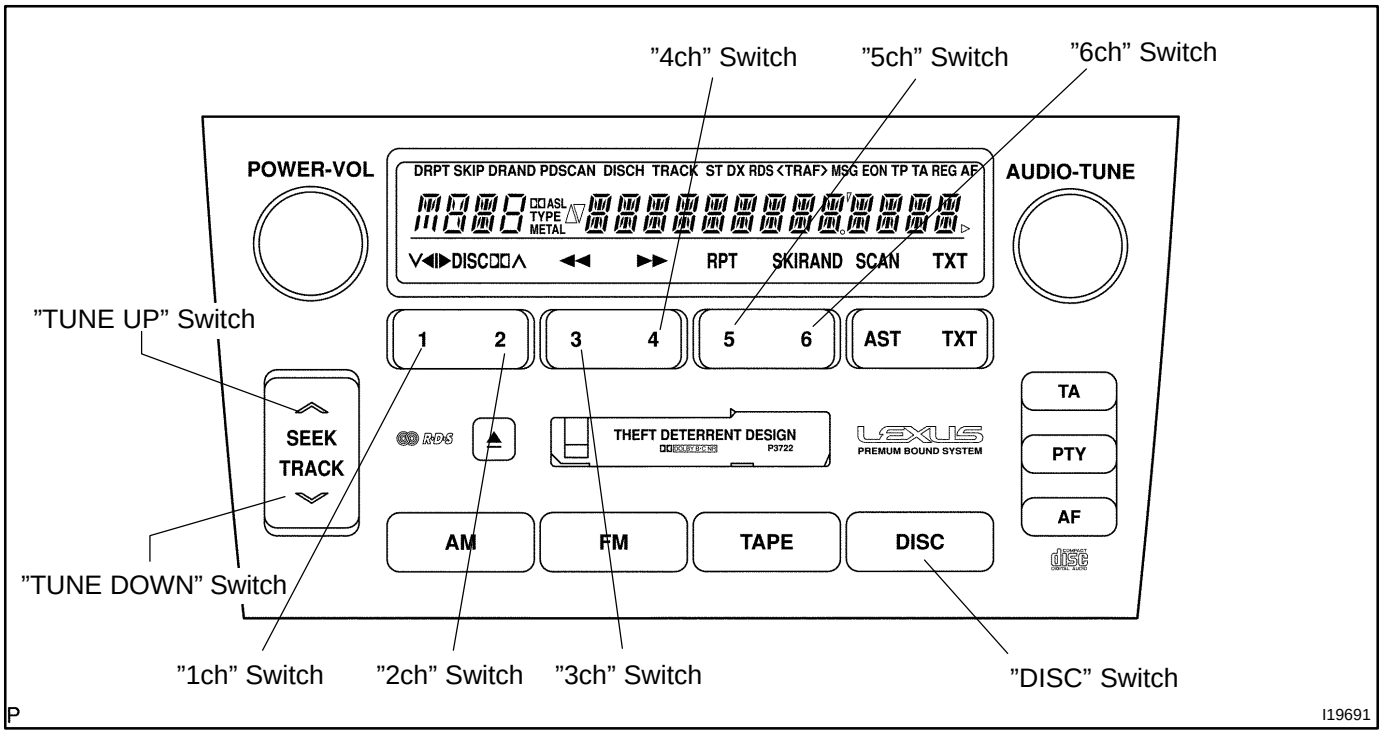

Code No. (physical address) List

Code No. (physical address)	Equipment name
190	Radio receiver assembly (Audio head unit)
240	CD changer (in Luggage room)
360	CD changer (in center console and glove compartment box)
440	Power amplifier

(c) System check

When pressing ”1” of PRESET switch in LAN check mode, the mode turns to the system check mode, the system performs self diagnosis of connected equipment and displays the results.(”SYS” (showing the system is under detection) is displayed.)

Perform the operation shown in the following illustration, then read the result of the inspection.

HINT:

It sometimes takes approx. 40 secs. till the system inspection is completed.
The chart below is an example of when diagnosis code ”21” appears on the physical address (190) equipment. (ROM error occurs on the radio receiver.)
The smaller code numbers (physical address) are displayed in order (code No., diagnosis code, support code of diagnosis code (object equipment)).
When no error is detected in the system, ”00” is displayed.
When an error code is detected, up to 6 codes per one system are displayed. Pressing TUNE ”UP” or ”DOWN” switches the display.
In the system check mode, when pressing ”6” of PRESET switch the mode returns to LAN check mode.

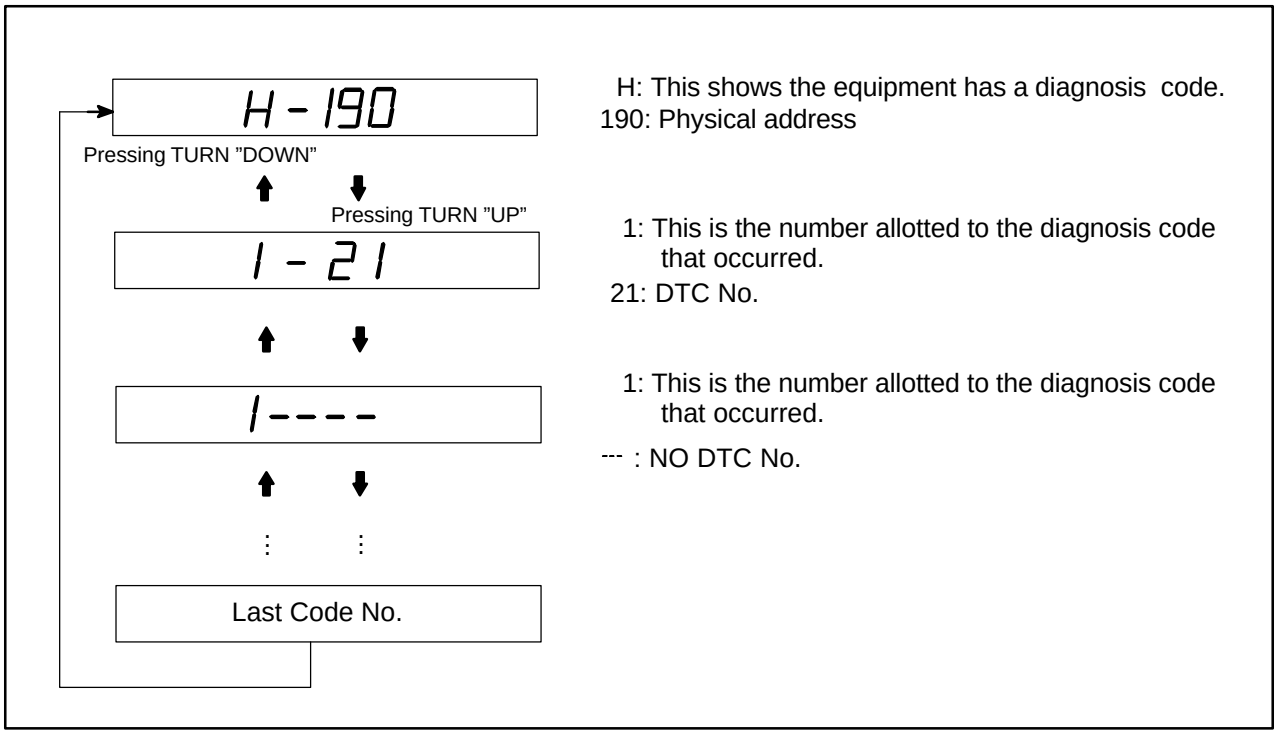

(d) Diagnosis memory

(1) In LAN check mode, when pressing ”2” of PRESET switch the mode turns to the diagnosis memory mode. (”CODE” is displayed.)
The results of self diagnosis performed over tuner and connected equipment are memorized and displayed.

(2) Perform the operation shown in the following illustration, then read the result of the inspection.

HINT:

The smaller code numbers (physical address) are displayed in order (code No. , periodic communication number when error occurs, diagnosis code, and support code of diagnosis code (object equipment)).
When no error is detected in the system, ”00” is displayed. When an error code is detected, up to 6 codes per one system are displayed. Pressing TUNE ”UP” or ”DOWN” switches the display. Each diagnosis code is same as code in the system check mode.
When pressing ”6” of PRESET switch, the mode returns to LAN check mode.
The following illustration below is an example of when diagnosis code ”D1” appears on the code (190) and (240 or 360) equipment. (Communication error occurs between the radio receiver and CD changer.)

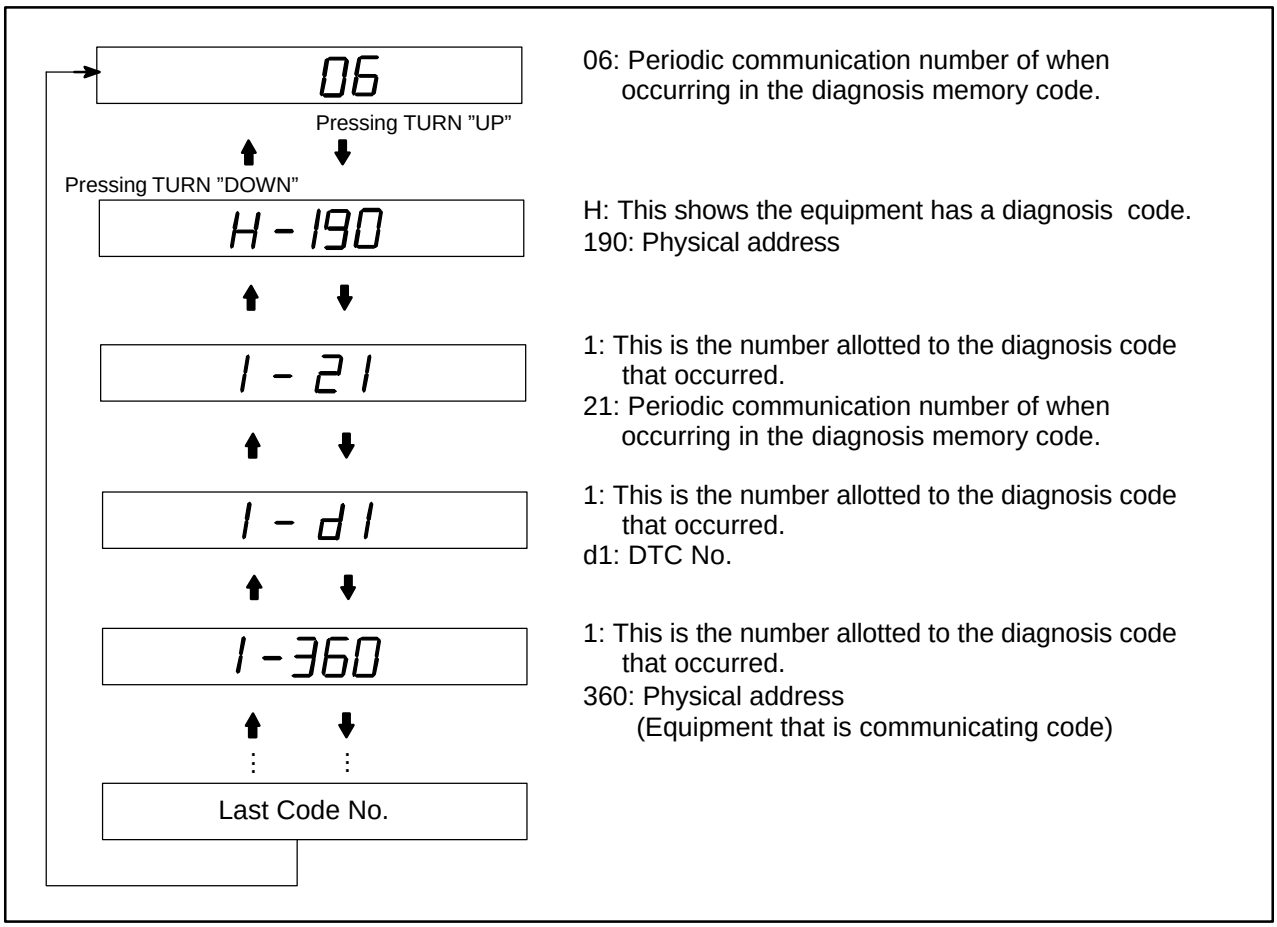

(e) Diagnosis memory clear
   (1) After error is fixed, start up the diagnosis mode.
   (2) Continue pressing preset switch "5" for 2 secs. (CLr is displayed.)
   (3) Press the preset switch "2" and transfer to the diagnosis memory mode and check that the normal code (00) is output.

3. Europe models: DIAGNOSIS CODE LIST

Terms	Meaning
Physical address	Three-digit code (shown in hexadecimal) which is given to each component comprising the AVC-LAN. Corresponding to the function, individual symbols are specified.
Logical address	Two-digit code (shown in hexadecimal) which is given to each function comprising the inner system of the AVC-LAN.

(a) Physical address 190: Radio receiver assembly

HINT:

*1: Even if no failure is detected, it may be stored depending on the battery condition or voltage for starting an engine.

*2: It is stored when 180 sec. has passed after the power supply connector is pulled out after engine start.

*3: It may be stored when the engine key is turned 1 min. again after engine start.

*4: It may be stored when the engine key is turned again after engine start.

*5: When 210 sec. has passed after pulling out the power supply connector of the master component with the ignition switch in ACC or ON, this code is stored.

(1) Logical address: 01 (Communication control)

DTC	Diagnosis item	Diagnosis content	Countermeasure and inspected parts
D6 *1	Absence of Master	Component in which this code is recorded has been disconnected from system with ignition in ACC or ON. Or, when this code was recorded, multi-display assembly was disconnected.	Check harness for power supply system of multi-display. Check harness for communication system of multi-display. Check harness for power supply system of radio and player. Check harness for communication system of radio and player.
D8 *2	No Response to Connection Check	Component shown by auxiliary code is or had been disconnected from system after engine is start. D9	Check harness for power supply system of component shown by auxiliary code. Check harness for communication system of component shown by auxiliary code.
D9 *1	Last Mode Error	Component operated (sounds and/or images were provided) before engine stop is or has been disconnected with ignition switch in ACC or ON.	Check harness for power supply system of component shown by auxiliary code. Check harness for communication system of component shown by auxiliary code.
DA	No Response to ON/OFF Instruction	No response is identified when changing mode (audio and visual mode change). Detected when sound and picture does not change by button operation.	Check harness for power supply system of component shown by auxiliary code. Check harness for communication system of component shown by auxiliary code. If error occurs again, replace component shown by auxiliary code.
DB *1	Mode Status Error	Dual alarm is detected.	Check harness for power supply of component shown by auxiliary code. Check harness for communication system of component shown by auxiliary code.
DC *3	Transmission Error	Transmission to component shown by auxiliary code has been failed. (Detecting this DTC does not necessarily mean actual failure.)	If same auxiliary code is recorded in order component, check harness for power supply and communication system of all components shown by code.

DD *4	Master Reset (Momentary Interruption)	After engine is started, multi-display assembly was disconnected from system.	Check harness for power supply system of multi-display. Check harness for communication system of multi-display. Check harness for power supply system of radio and player. Check harness for communication system of radio and player. If this error occurs frequently, replace multi-display assembly.
DE *4	Slave Reset (Momentary Interruption)	After engine is started, slave component was disconnected from system.	Check harness for power supply of component shown by auxiliary code. Check harness for communication system of component shown by auxiliary code.
DF *5	Master Error	Due to defective condition of component with a display, master function is switched to audio equipment. Error occurs in communication between sub-master (audio) and master component.	Check harness for power supply of multi-display assembly. Check harness for communication system of multi-display assembly. Check harness for communication system between multi-display assembly and sub-master component.
E0 *1	Registration Completion Instruction Error	”Registration Completion Instruction” command from master cannot be received.	Since this DTC is provided for engineering purpose, it may be detected when no actual failure exists.
E1 *1	Audio processor ON error	While source equipment is operating, AMP output is stopped.	Check harness for power supply of multi-display assembly. Check harness for communication system of multi-display assembly.
E2	ON/OFF Instruction Parameter Error	Error occurs in ON/OFF controlling command from multi-display assembly.	Replace multi-display assembly.
E3 *1	Registration Request Transmission	Registration Request command is output from slave component. Receiving Connection Check Instruction, Registration Request command is output from sub-master component.	Since this DTC is provided for engineering purpose, it may be detected when no actual failure exists.
E4 *1	Multiple Frame Abort	Multiple frame transmission is aborted.	Since this DTC is provided for engineering purpose, it may be detected when no actual failure exists.

(2) Logical address: 61 (Cassette switch)

DTC	Diagnosis item	Diagnosis content	Countermeasure and inspected parts
40	Mechanical of Media Error	Malfunction due to mechanical failure is identified. Or cassette tape is cut or entangled.	Inspect cassette tape. Replace radio and player.

(b) Physical address: 440 Stereo component amplifier

HINT:

*1: Even if no failure is detected, it may be stored depending on the battery condition or voltage for starting an engine.

*2: It may be stored when the engine key is turned 1 min. again after engine start.

*3: It may be stored when the engine key is turned again after engine start.

*4: When 210 sec. has passed after pulling out the power supply connector of the master component with the ignition switch in ACC or ON, this code is stored.

Logical address: 01 (Communication control)

DTC	Diagnosis item	Diagnosis content	Countermeasure and inspected parts
D6 *1	Absence of Master	Component in which this code is recorded has been disconnected from system with ignition in ACC or ON. Or, when this code was recorded, multi-display assembly was disconnected.	Check harness for power supply of radio and player. Check harness for communication system of radio and player. Check harness for power supply of stereo component amplifier. Check harness for communication system of stereo component amplifier.
D4	Communication Check Error	Component in which this code is recorded is or was disconnected from system after engine start. Or, when recording this code, multi-display assembly was disconnected.	Check harness for power supply of radio and player. Check harness for communication system of radio and player. Check harness for power supply of stereo component amplifier. Check harness for communication system of stereo component amplifier.
D1 *2	Transmission Error	Transmission to component shown by auxiliary code has been failed. (Detecting this DTC does not necessarily mean actual failure.)	If same auxiliary code is recorded in order component, check harness for power supply and communication system of all components shown by code.

(c) Physical address: 240 CD Auto Changer

HINT:

*1: Even if no failure is detected, it may be stored depending on the battery condition or voltage for starting an engine.

*2: It may be stored when the engine key is turned 1 min. again after engine start.

*3: It may be stored when the engine key is turned again after engine start.

*4: It may be stored when the engine key is turned again after engine start.

*5: When 210 sec. has passed after pulling out the power supply connector of the master component with the ignition switch in ACC or ON, this code is stored.

(1) Logical address: 01 (Communication control)

DTC	Diagnosis item	Diagnosis content	Countermeasure and inspected parts
DI	Transmission Error	Transmission to component shown by auxiliary code has been failed. (This code does not necessarily mean actual failure.)	If same auxiliary code is recorded in other component(s), check harness for power supply and communication system of components shown sub code.
D4 *5	Connection check Error	Component in which this code is recorded is or was disconnected from system after engine start. Or, when recording this code, multi-display assembly was disconnected.	Check harness for power supply of multi-display. Check harness for communication system of multi-display. Check harness for power supply of CD auto changer. Check harness for communication system of CD auto changer.

(2) Logical address: 63 (CD Auto Changer)

DTC	Diagnosis item	Diagnosis content	Countermeasure and inspected parts
60	CD Error	Error is detected in CD auto changer.	Replace CD auto changer
61	EJECT Error	Magazine cannot be ejected.	Replace CD auto changer
62	No Disc Readout	Disc cannot be read.	Inspect CD

63	CD Auto Changer Temp. Too High	Readout cannot be done because temperature around player's pick-up (reading part) is too high.	With IG switch OFF, leave vehicle in cool shaded place for a while and re-check. After deleting the DTC memory, if same code detected, replace CD auto changer.
64	CD Changer Excess Current	Excess current is applied CD auto changer.	Replace CD auto changer

4. Except Europe models:

DIAGNOSIS CODE LIST

If there is "O" in the column of system check, an error can be detected when the mode is switched to the system check mode.

If there is "O" in the column of diagnosis mode, each unit is monitoring whether or not it has failure. In case of detectng failure, it memorizes DTC.

Parts Name	DTC	Diagnosis item	Diagnosis content	Countermeasure and inspected parts	System Check	Diagnosis memory
Head Unit (190)	50	Cassette error	There is an error in cassette deck.	Radio receiver check.	X	○
	D1	Transmitter error	Communication with the equipment that is communicating has failed successively.	Radio receiver check. Wire harness and connecter check.	○	○
	D2	Periodic communication no response	Error in periodic communication.	Wire harness and connector	X	○
	FF	Diagnosis no response	Result of diagnosis is not issued from start to finish.	Radio receiver check.	○	X
CD (240) (360)	60	CD error	Error codes other than 61-69 are detected.	CD changer check.	X	○
	61	EJECT error	CD is not ejected.	CD changer check. Magazine check.	X	○
	62	DISC inside out/flaw	CD is inserted inside out or it has a flaw.	CD check.	X	○
	63	Pickup temperature detection	High temperature of CD changer is detected.	CD changer check.	X	○
	64	Excessive current detection	Excessive current to CD changer is detected.		X	○
	67	Tray insertion/ discharging error	An error occurs in insertion and discharging operation of CD changer tray.	CD changer check. Magazine check.	X	○
	68	Elevator error	An error occurs in elevator of CD changer elevator.	CD changer check.	X	○
	D1	Transmitter error	Communication with the equipment that is communicating has failed successively.		○	○
	D4	Periodic communication error	Connection confirmation has not come from the equipment that is communicating	Radio receiver check. Wire harness check.	X	○

Parts Name	DTC	Diagnosis item	Diagnosis content	Countermeasure and inspected parts	System Check	Diagnosis memory
AMP (440)	D1	Transmitter error	Communication with the equipment that is communicating has failed successively.	Stereo component amplifier check.	○	○
	D4	Periodic communication error	Connection confirmation has not come from the equipment that is communicating	Radio receiver check. Wire harness check.	X	○

5. PROBLEM SYSMPTOMS TABLE

NOTICE:

When replacing the internal mechanism (computer part) of the audio system, be careful that no part of your body or clothing comes in contact with the terminals of the leads from the IC, etc. of the replacement part (spare part).

HINT:

This inspection procedure is a simple troubleshooting which should be carried out on the vehicle during system operation and was prepared on the assumption of system component troubles (except for the wires and connectors, etc.).

Always inspect the trouble taking the following items into consideration.

Open or short circuit of the wire harness

Connector or terminal connection fault

	Problem	Flow chart No.
Radio	Radio not operating when power switch turned to 'ON'.	1
	Display indicates when power switch turned to 'ON', but no sound (including 'noise') is produced.	2
	Noise present, but AM - FM not operating.	3
	Any speaker does not work.	4
	Any AM or FM does not work.	5
	Few preset turning bands.	5
	Reception poor.	6
	Sound quality poor.	7
	Preset memory disappears.	8
Tape Player	Cassette tape cannot be inserted.	9
	Cassette tape inserted, but no power.	10
	Power coming in, but tape player not operating.	11
	Any speaker does not work.	12
	Sound quality poor.	13
	Tape jammed, malfunction with tape speed or auto-reverse.	14
	Cassette tape will not eject.	15
CD Auto Chenger	CD magazine cannot be inserted.	16
	CD magazine inserted, but no power.	17
	Power coming in, but CD player not operating.	18
	Sound jumps.	19
	Sound quality poor (Volume faint).	20
	Any speaker does not work.	21
	CD magazine will not be ejected.	22
Power Amplifier	No power coming in.	23
	Power coming in, but power amplifier not operating.	24
	Any speaker does not work.	25
Noise	Noise occurs	26
	Noise produced by vibration or shock while driving.	27
	Noise produced when engine starts.	28

The term "AM" includes LW,MW and SW, and the term "FW" includes UKW.

1	Radio	RADIO NOT OPERATING WHEN POWER SWITCH TURNED TO ”ON”

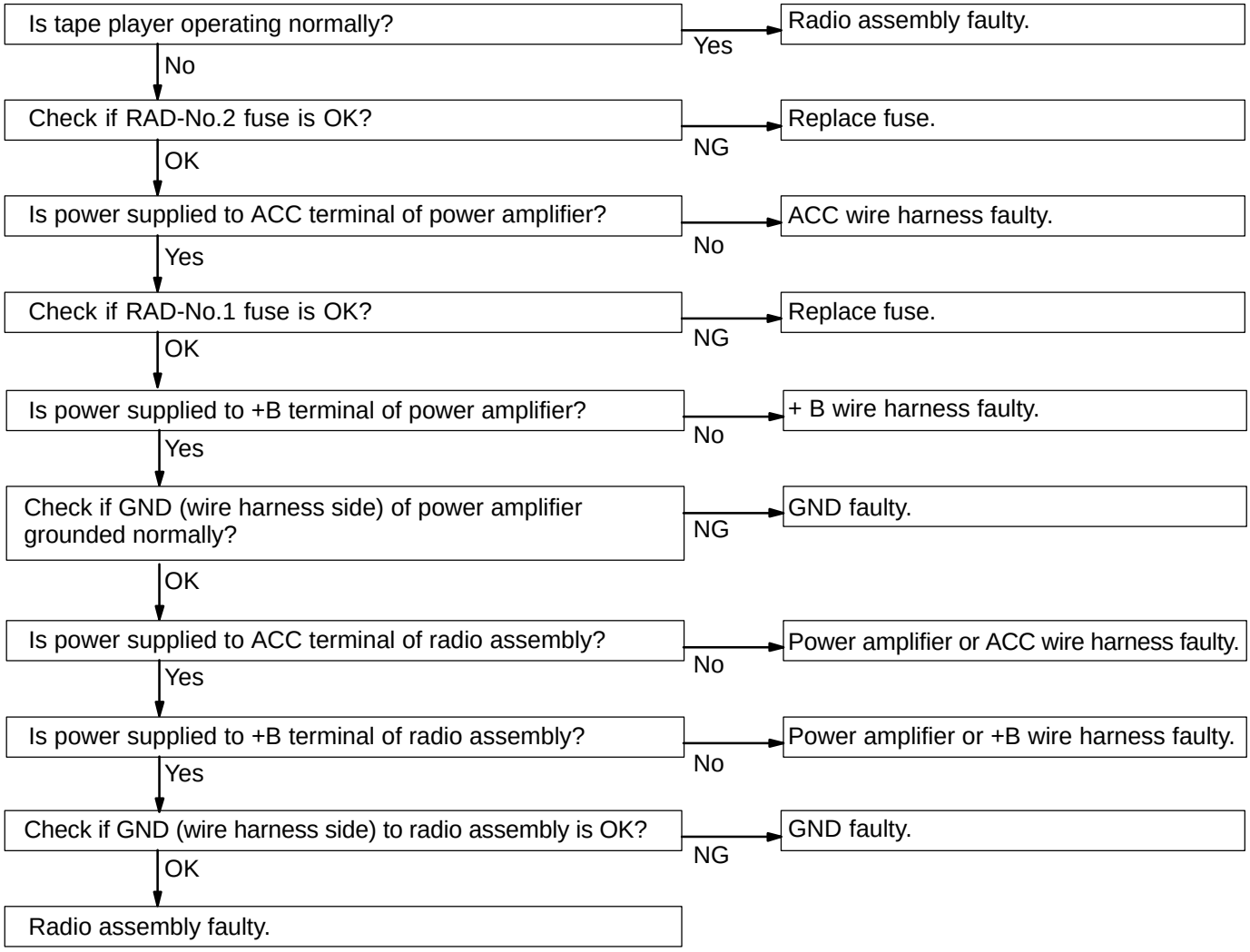

2	Radio	DISPLAY INDICATES WHEN POWER SWITCH TURNED TO ”ON”, BUT NO SOUND (INCLUDING ”NOISE”) IS PRODUCED

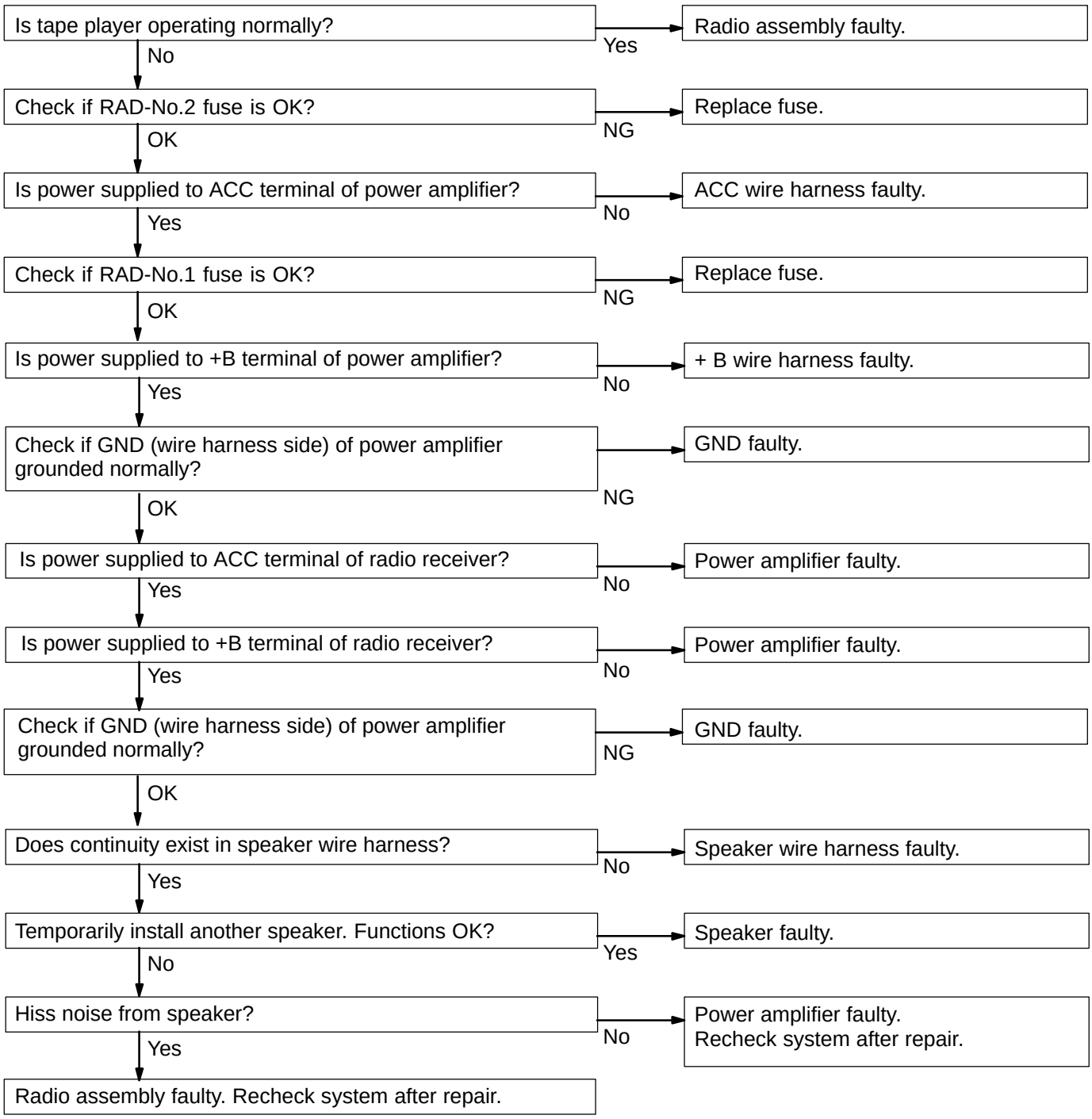

3	Radio	NOISE PRESENT, BUT AM-FM NOT OPERATING

Go to No.25

If radio side faulty. → Radio faulty.

4	Radio	ANY SPEAKER DOSE NOT WORK

Is tape player operating normally?
- Yes → Radio assembly faulty.
- No ↓

Is hiss noise produced by non-functioning speaker?
- Yes → Radio assembly faulty. Recheck system after repair.
- No ↓

Does continuity exist in speaker wire harness?
- No → Speaker wire harness faulty.
- Yes ↓

Temporarily install another speaker? Functions OK?
- Yes → Speaker faulty.
- No ↓

Power amplifier faulty. Recheck system after repair.

5	Radio	ANY AM OR FM DOES NOR WORK FEW PRESET TUNING BANDS

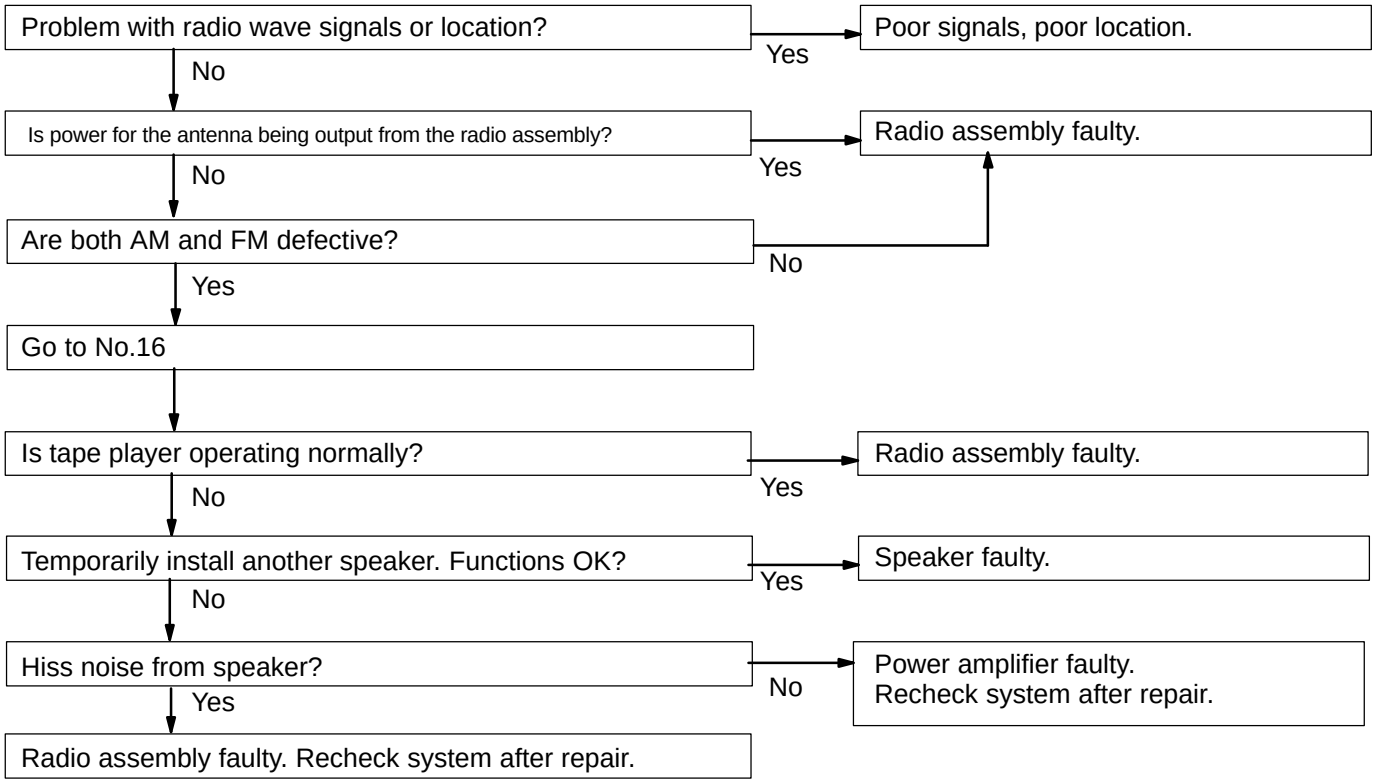

6	Radio	POOR RECEPTION

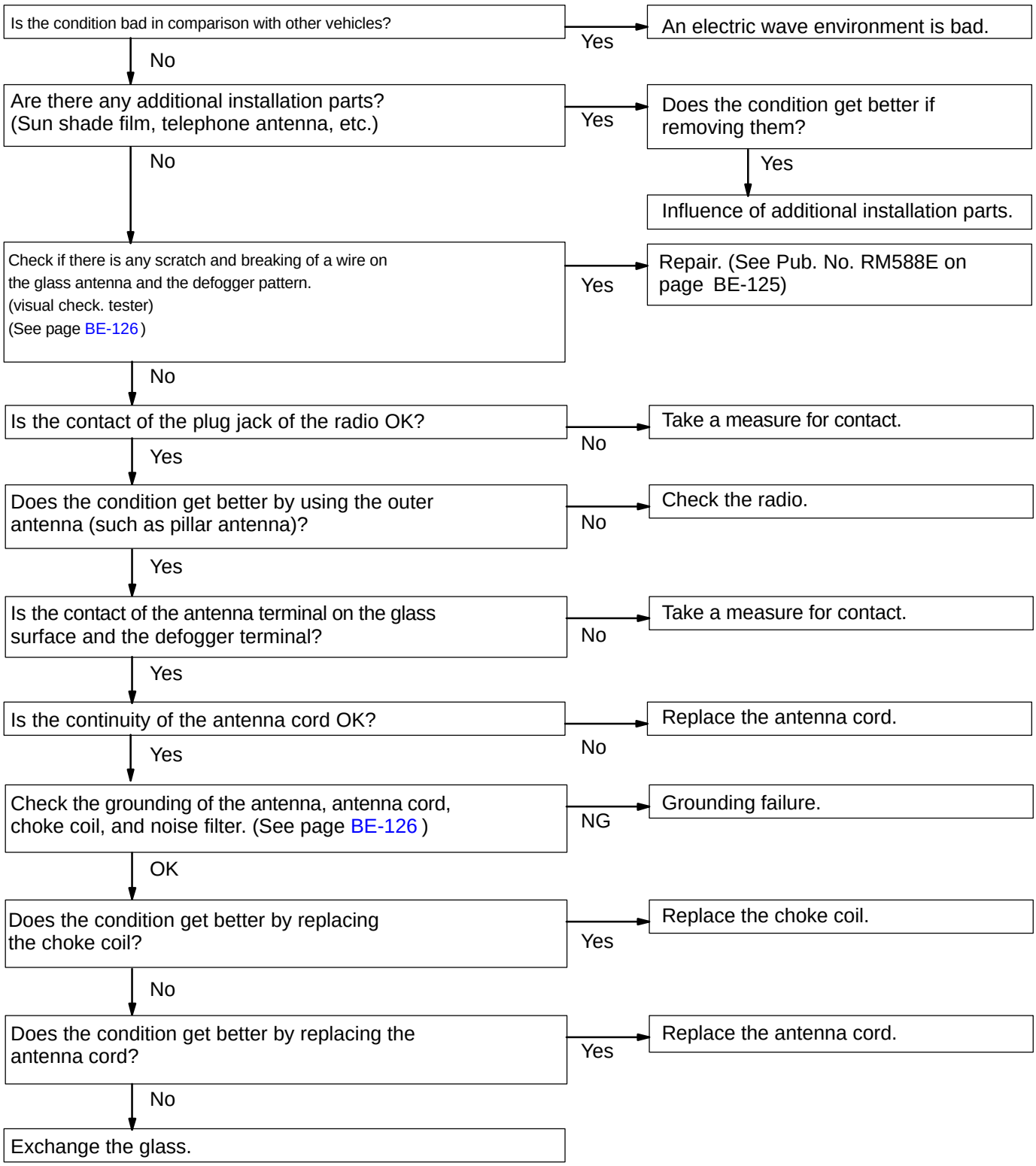

7	Radio	SOUND QUALITY POOR

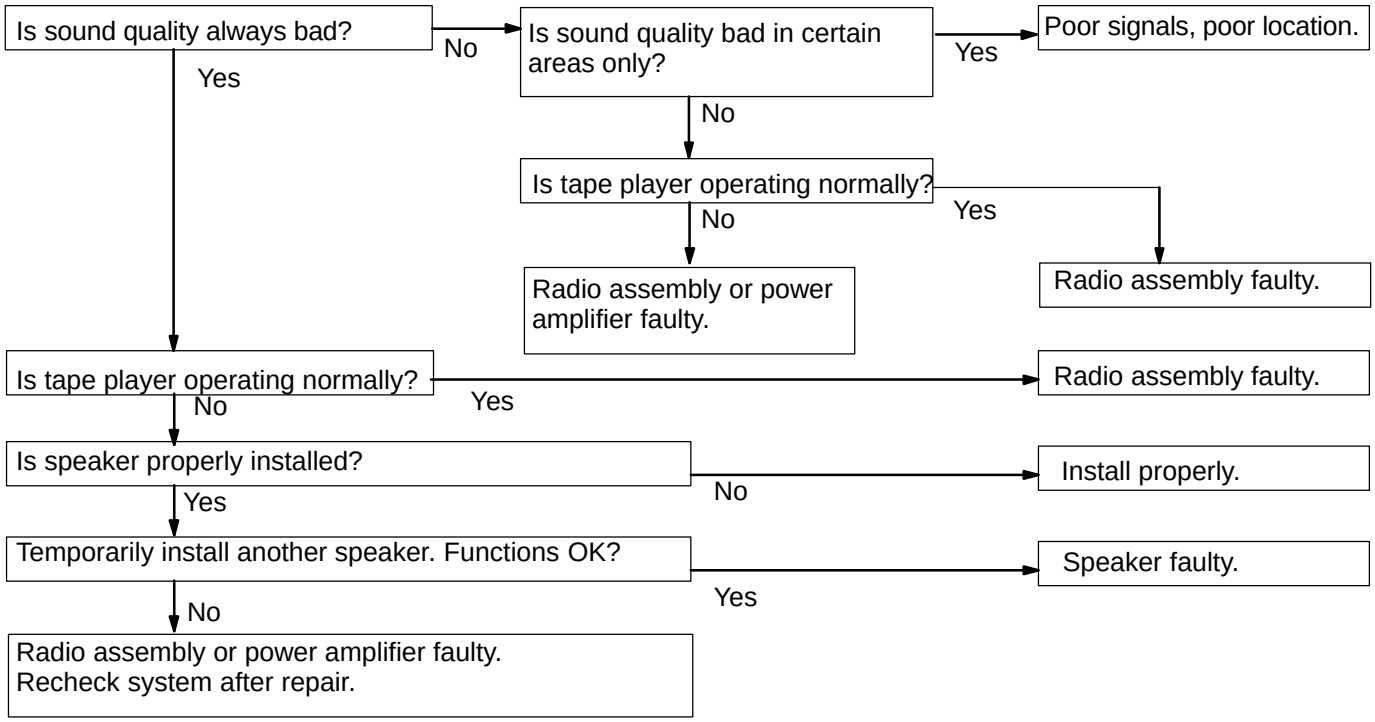

8	Radio	PRESET MEMORY DISAPPEARS

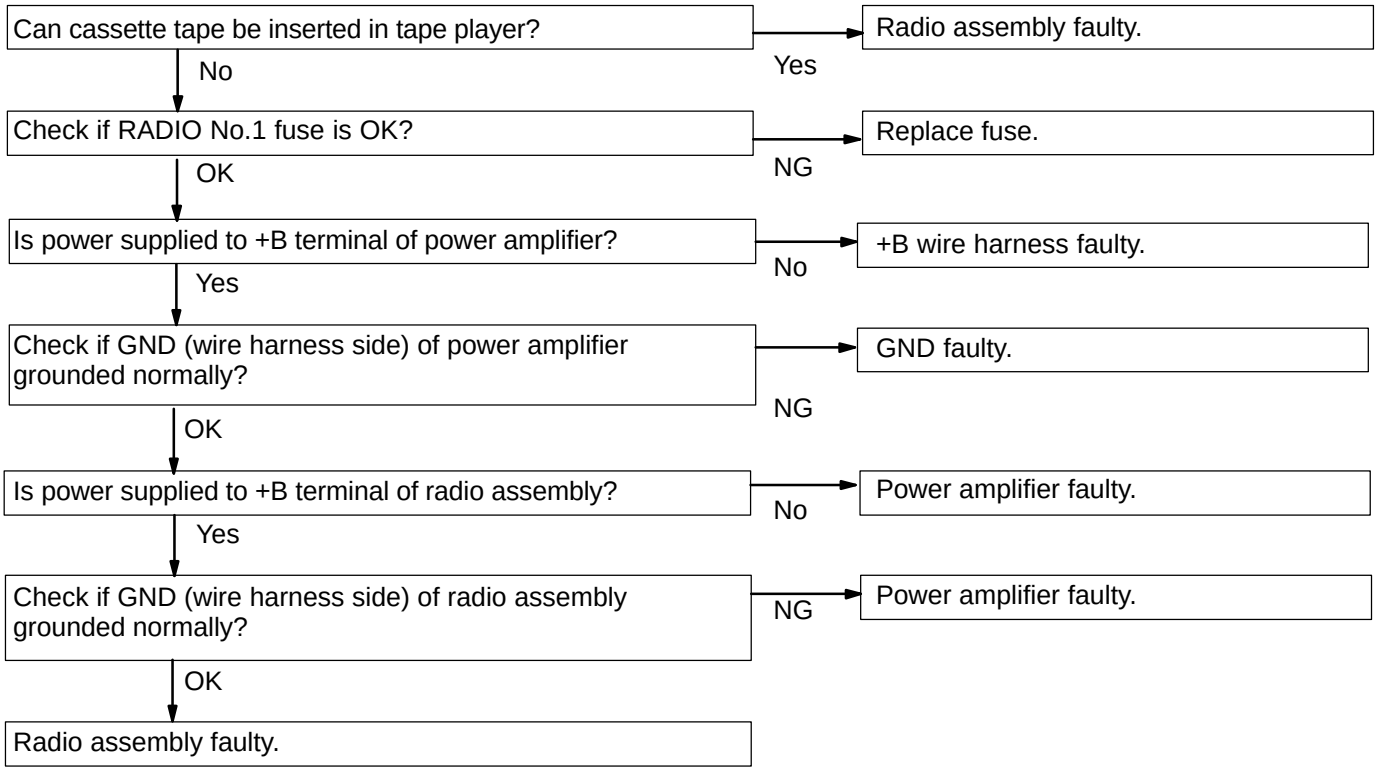

9	Tape Player	CASSETTE TAPE CANNOT BE INSERTED

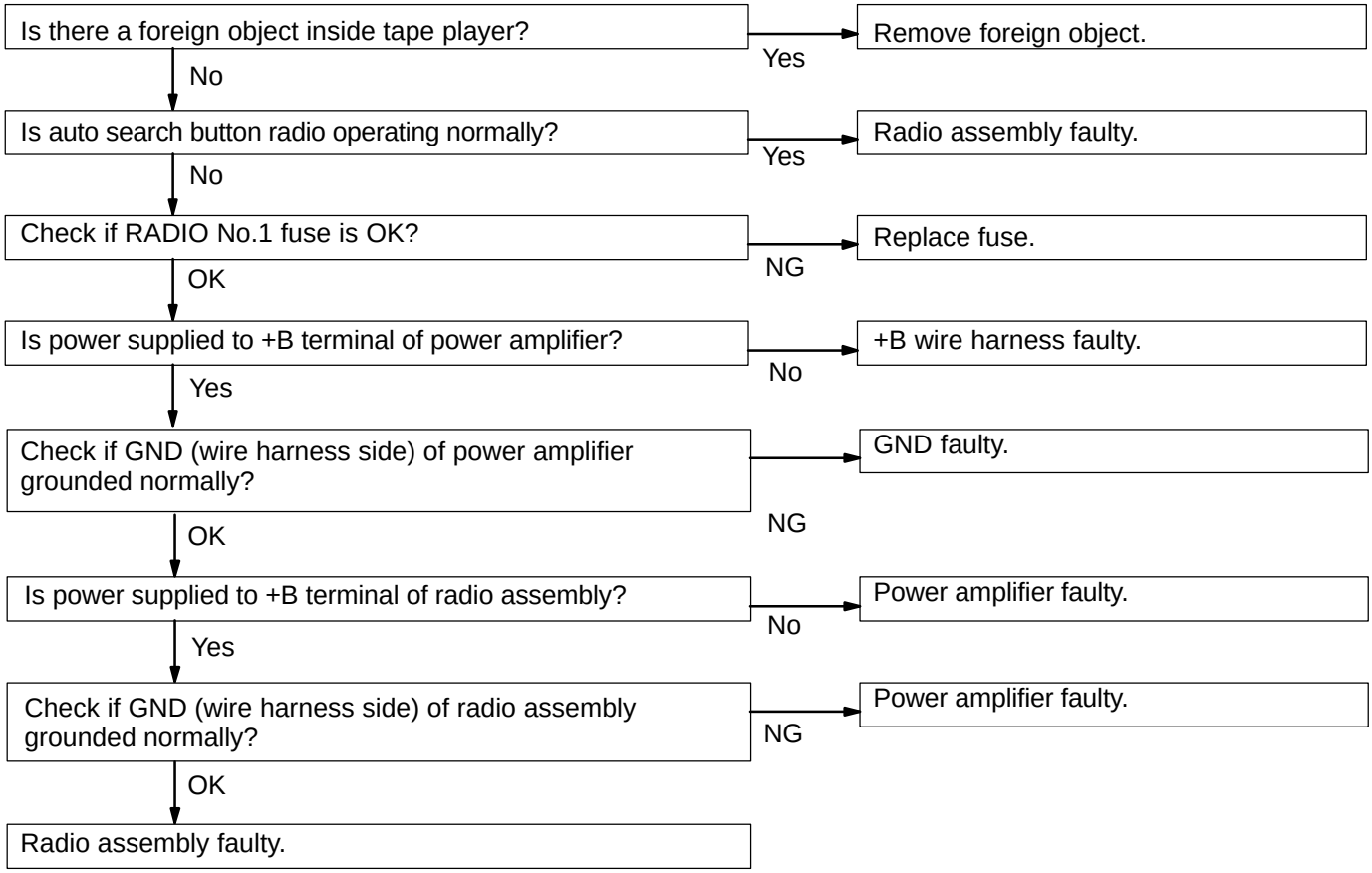

10	Tape Player	CASSETTE TAPE INSERTED, BUT NO POWER

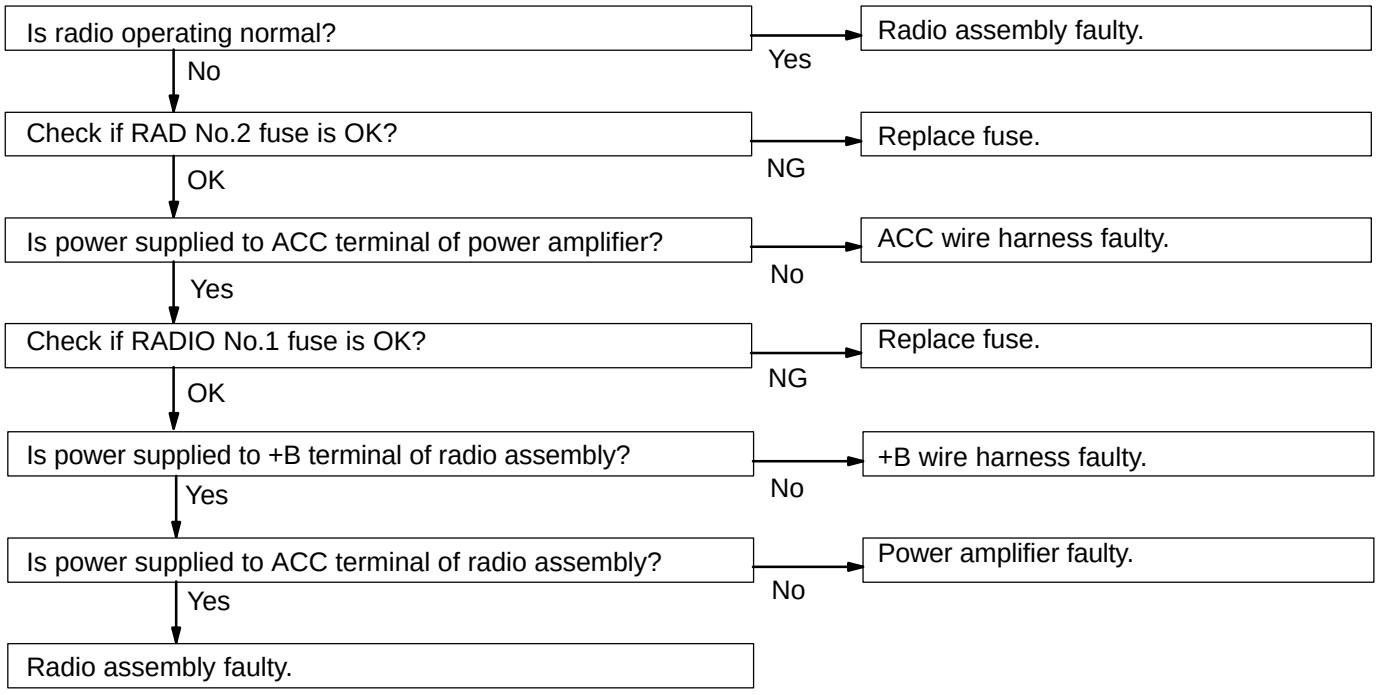

11	Tape Player	POWER COMING IN, BUT TAPE PLAYER NOT OPERATING

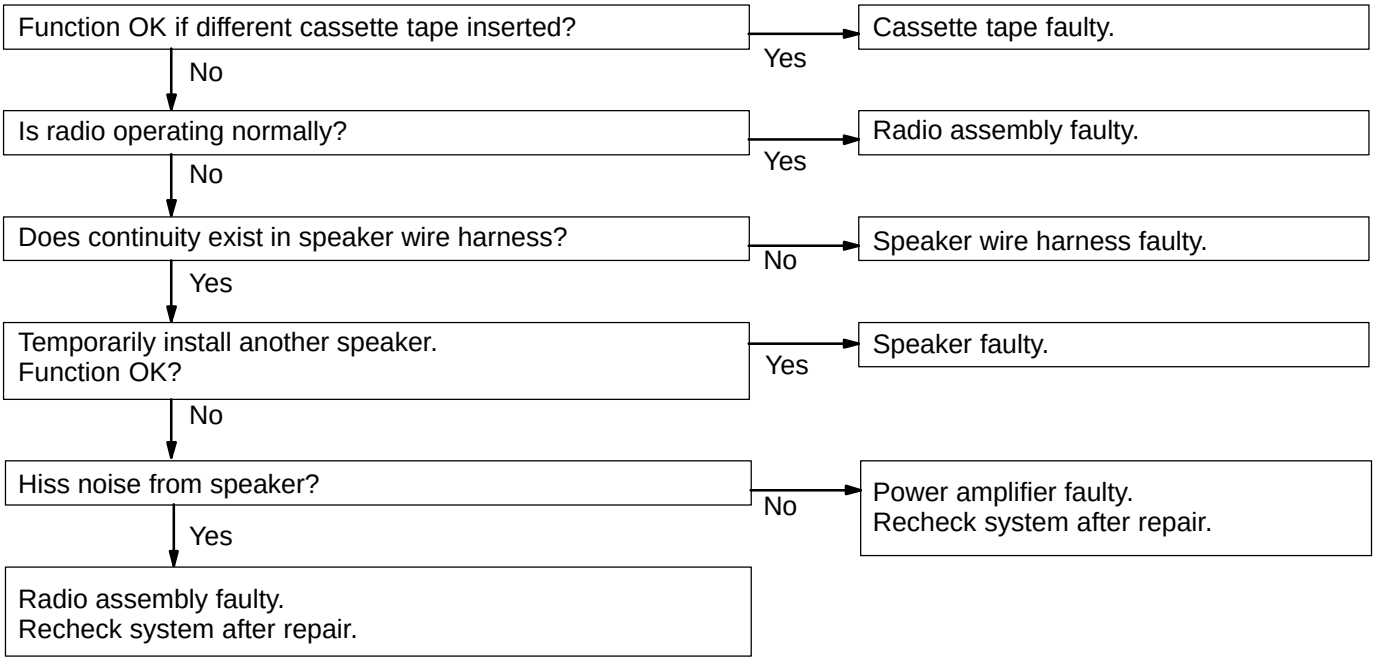

12	Tape Player	ANY SPEAKER DOES NOT WORK

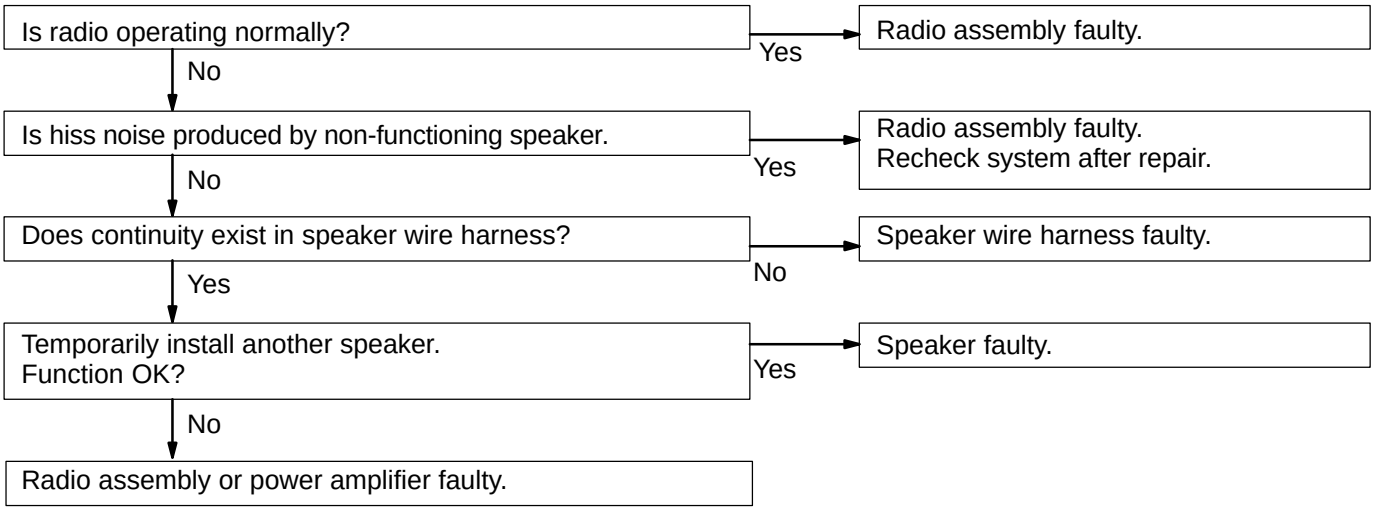

13	Tape Player	SOUND QUALITY POOR (VOLUME FAINT)

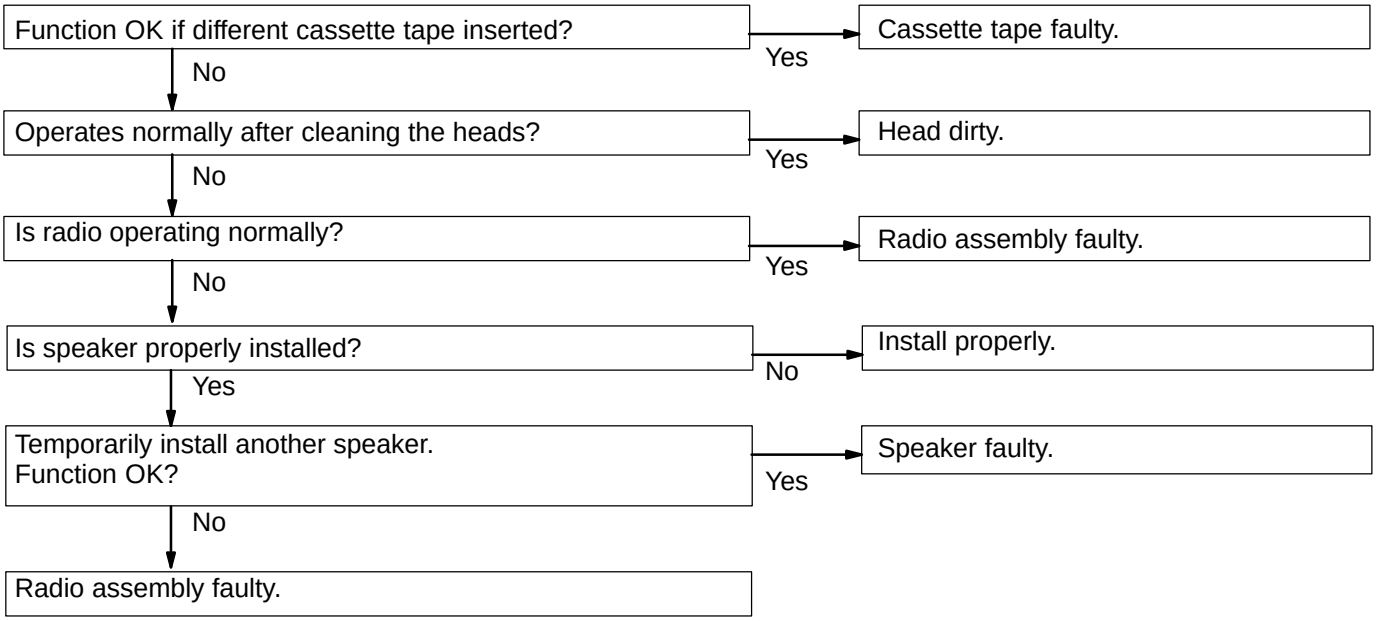

14	Tape Player	TAPE JAMMED MALFUNCTION WITH TAPE SPEED OR AUTO-REVERSE

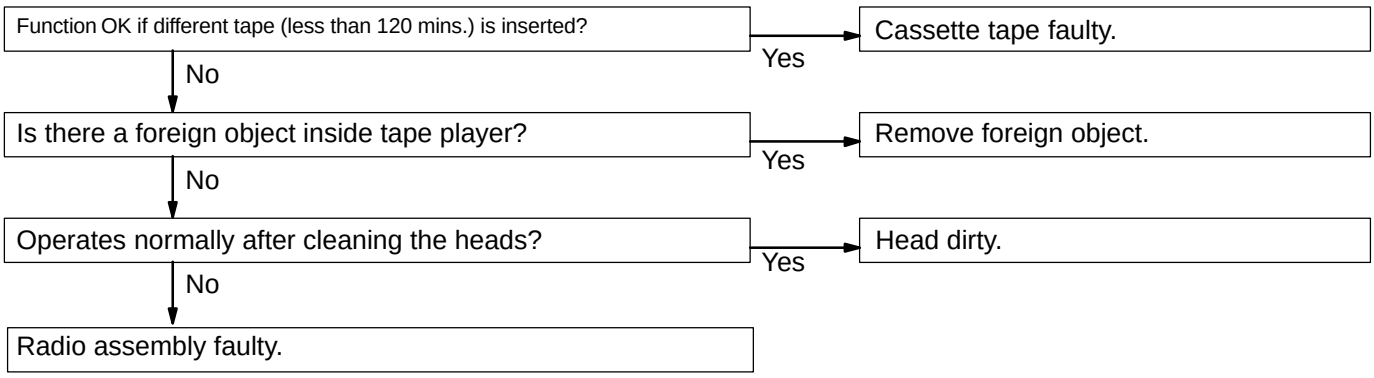

15	Tape Player	CASSETTE TAPE WILL NOT BE EJECTED

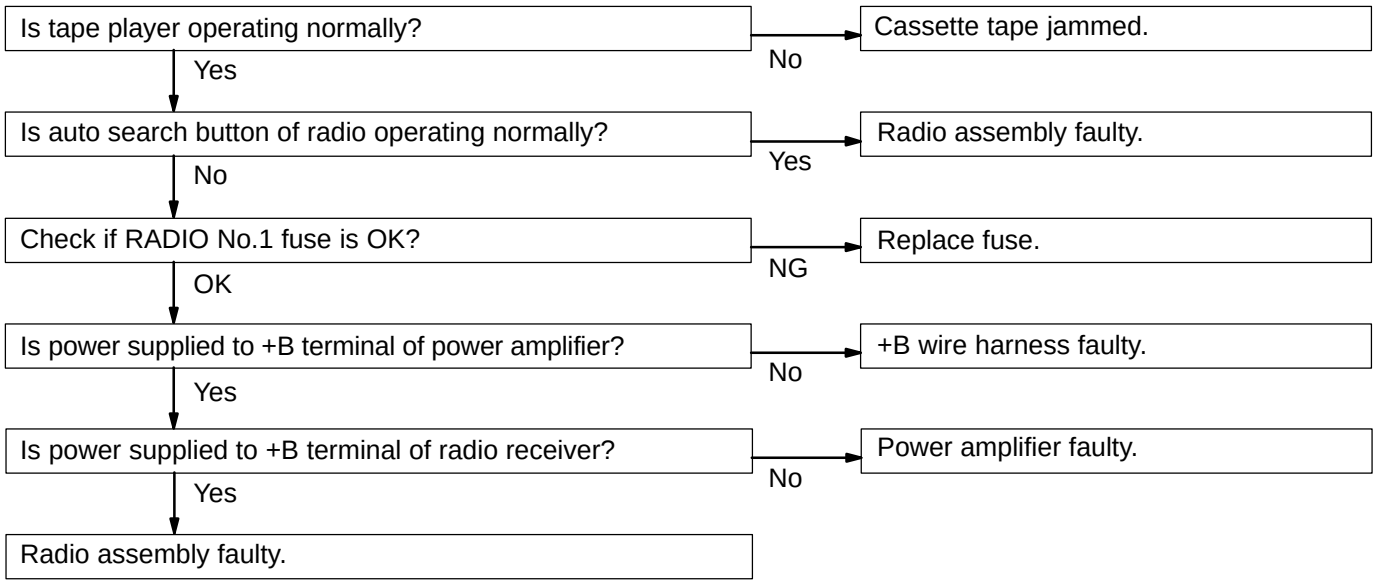

16	CD Auto Chenger	CD MAGAZINE CANNOT BE INSERTED

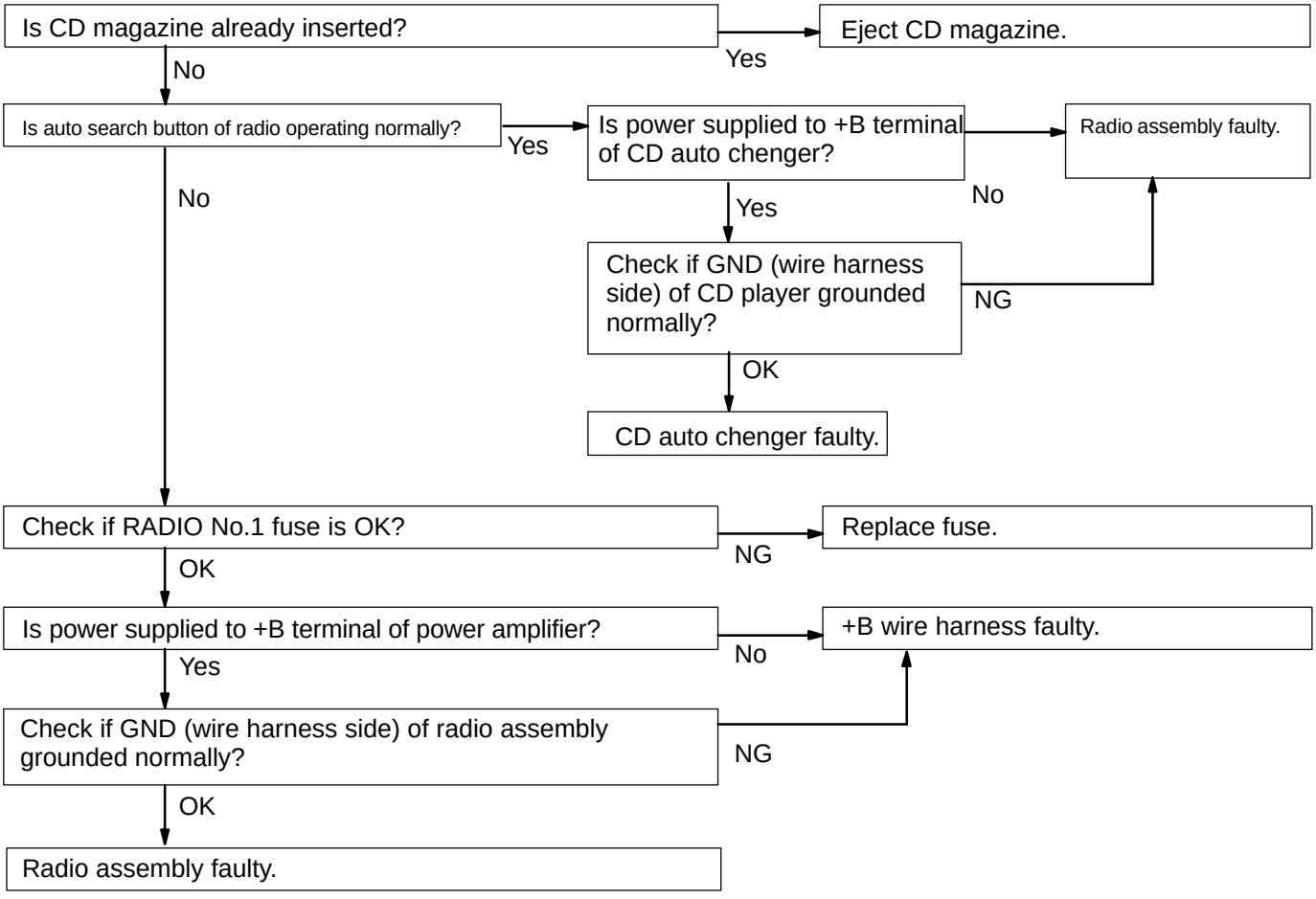

17	CD Auto Chenger	CD MAGAZINE INSERTED, BUT NO POWER

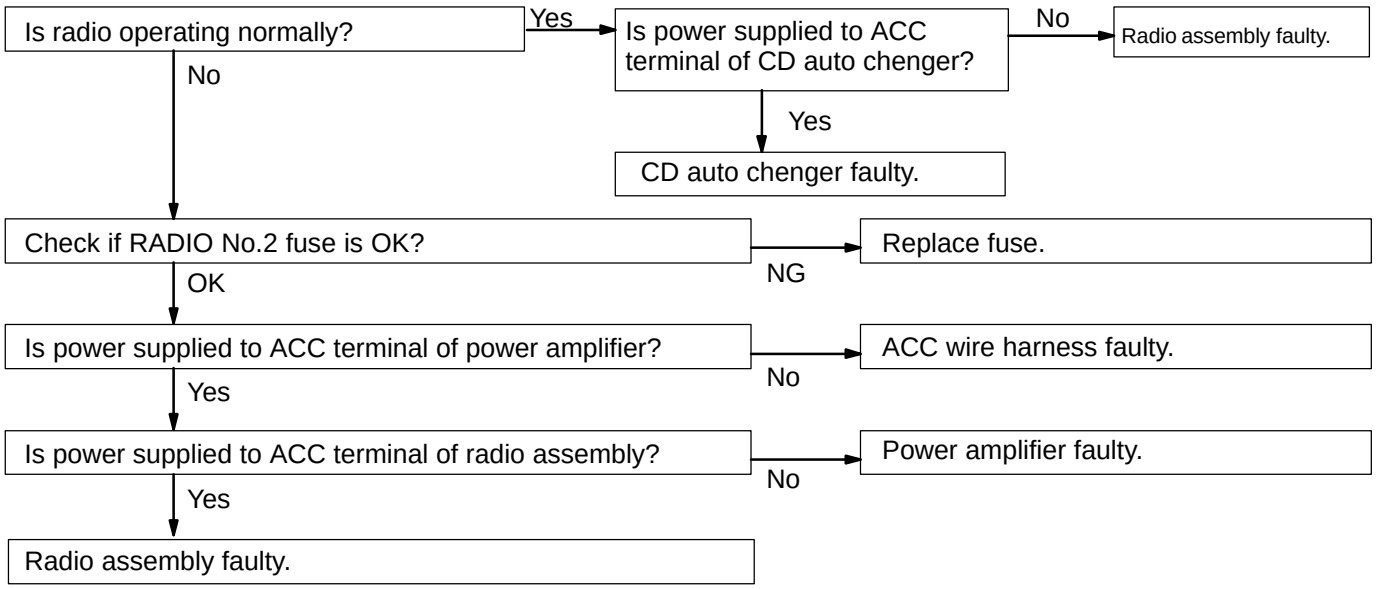

18	CD Auto Chenger	POWER COMING IN, BUT CD AUTO CHENGER NOT OPERATING

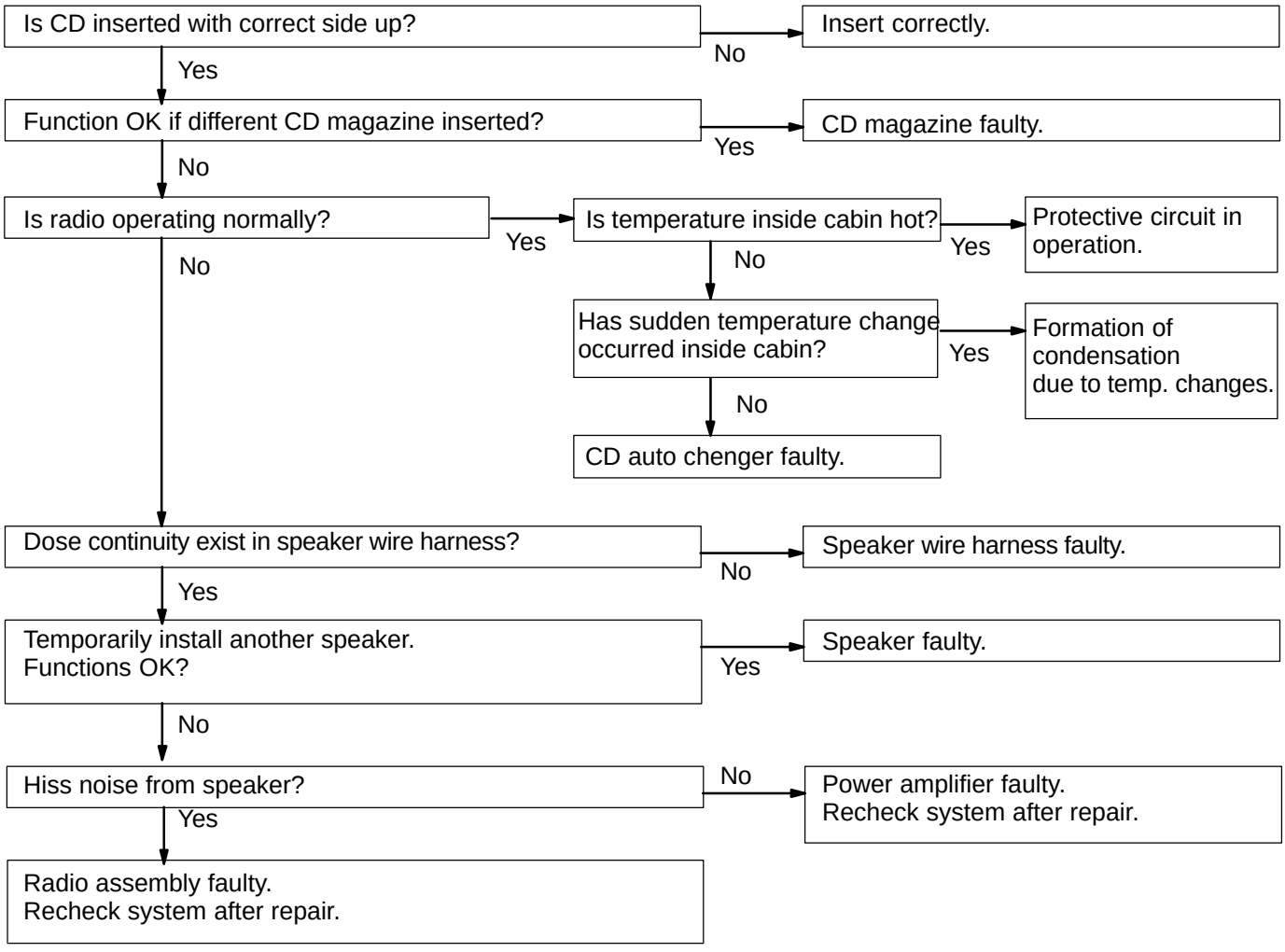

19	CD Auto Chenger	SOUND JUMPS

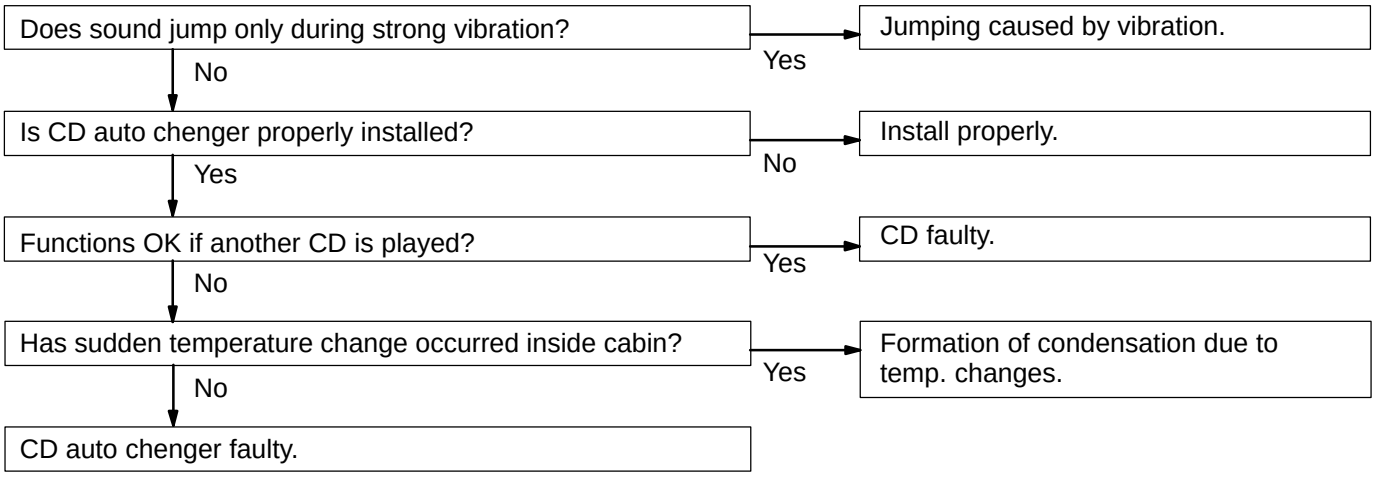

20	CD Auto Chenger	SOUND QUALITY POOR (VOLUME FAINT)

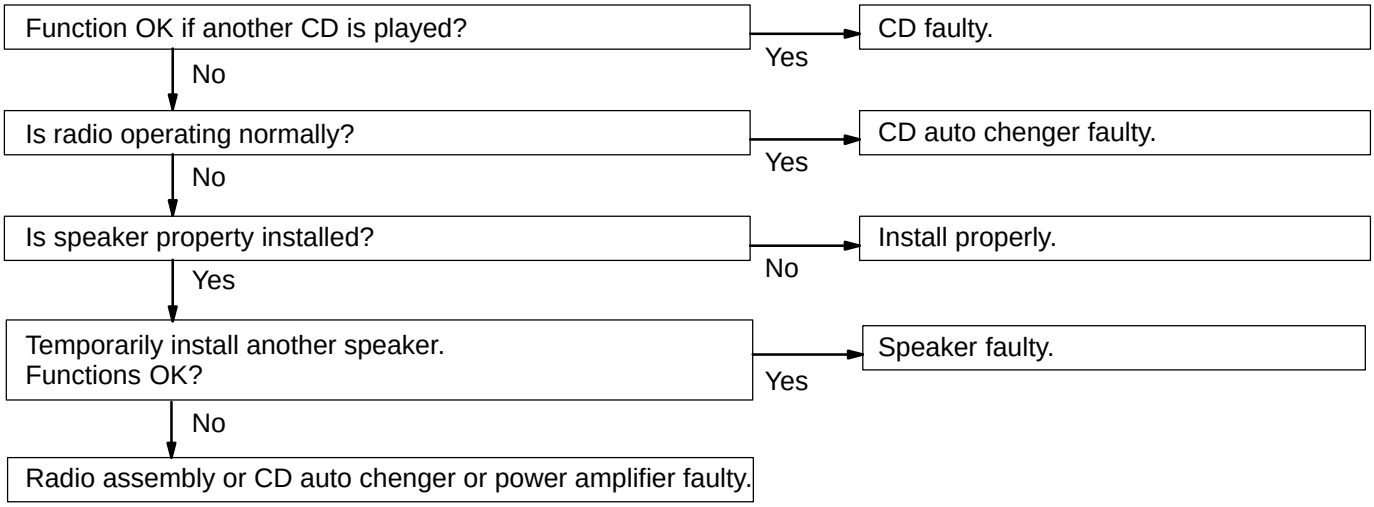

21	CD Auto Chenger	ANY SPEAKER DOES NOT WORK

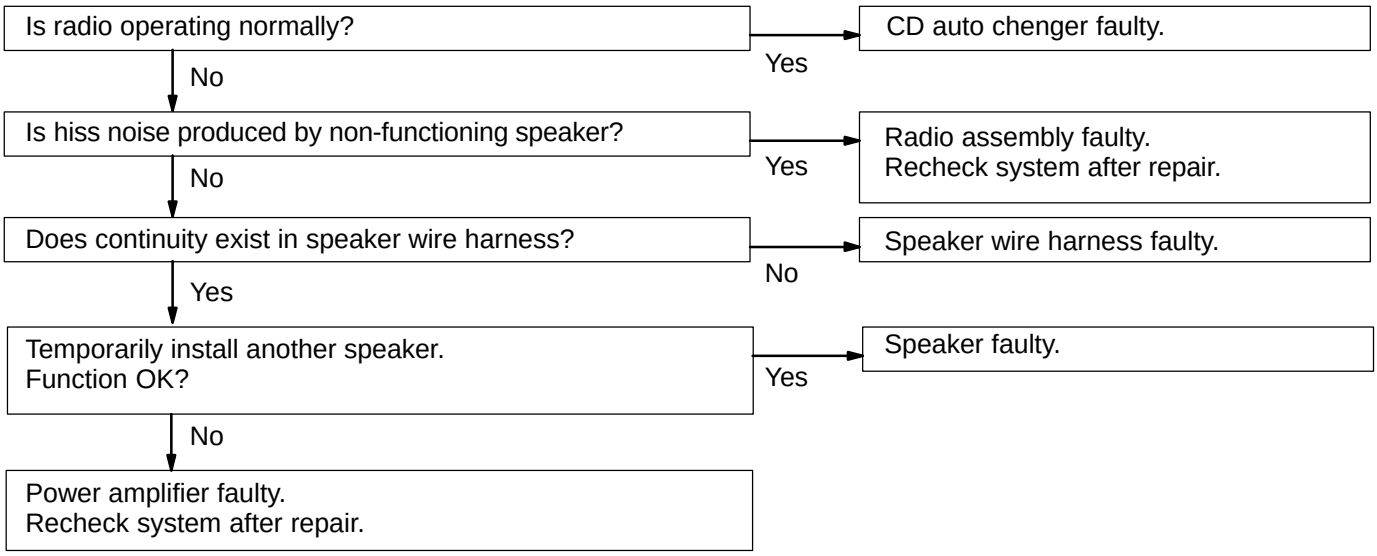

22	CD Auto Chenger	CD MAGAZINE WILL NOT BE EJECTED

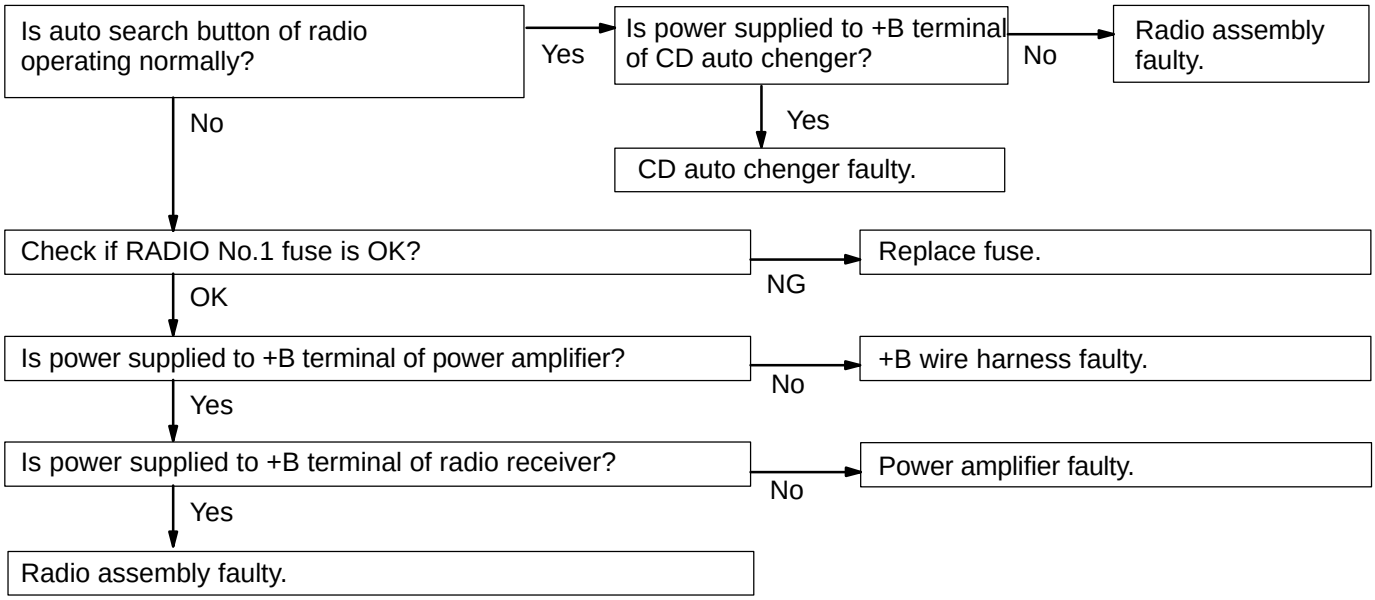

23	Power Amplifier	NO POWER COMING IN

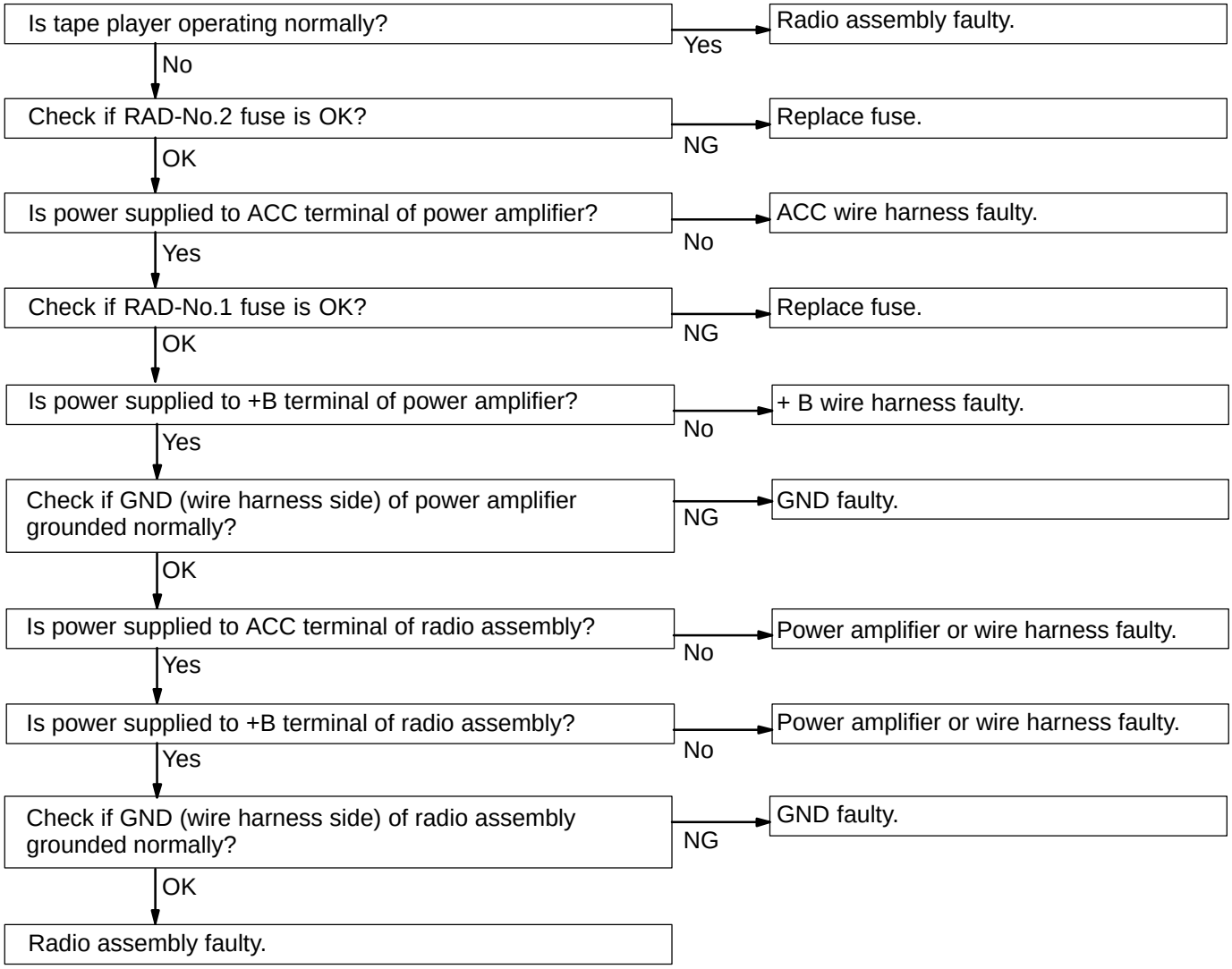

24	Power Amplifier	POWER COMIMG IN, BUT WOOFER (POWER) AMPLIFIER NOT OPERATING

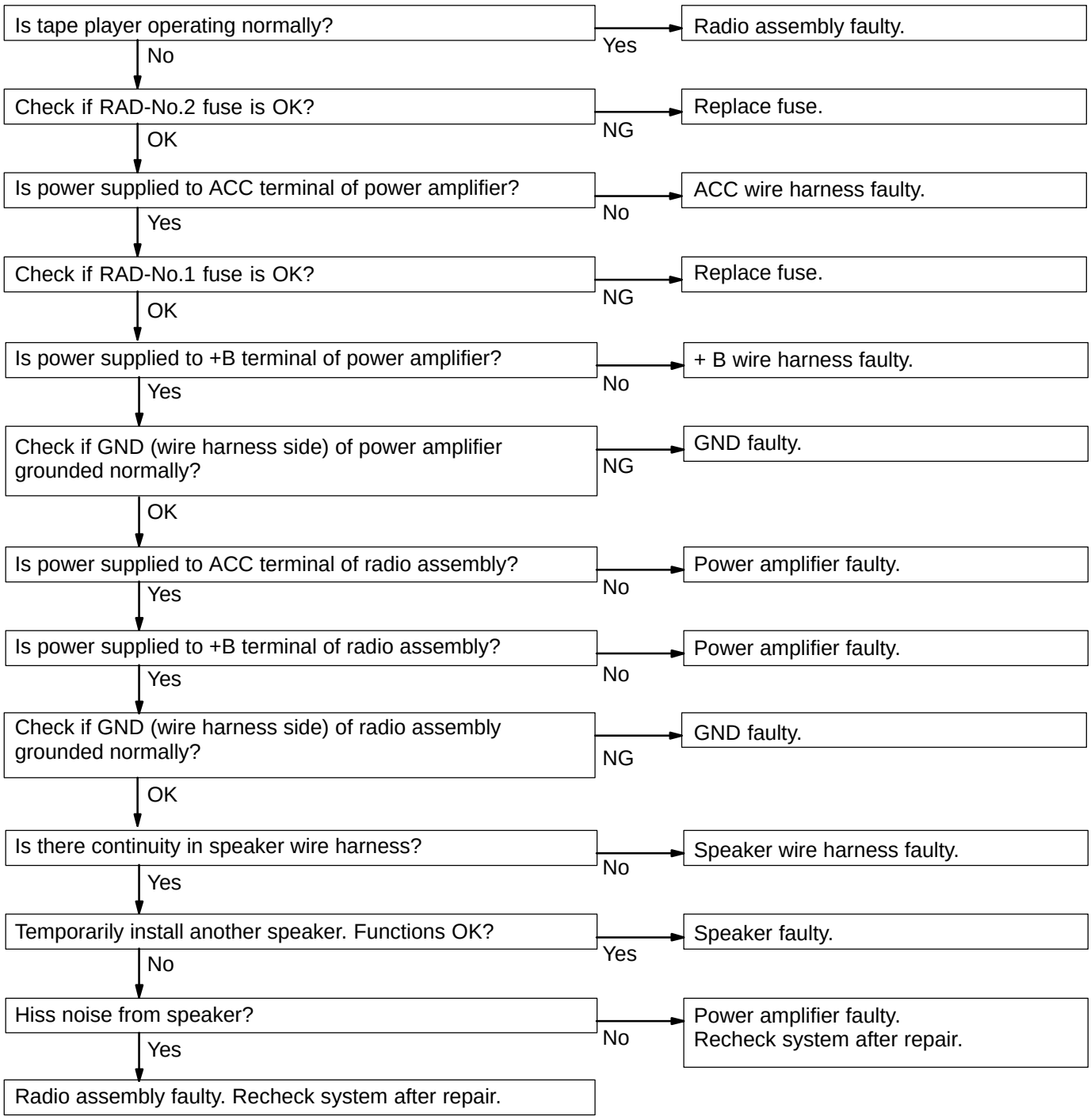

25	Power Amplifier	ANY SPEAKER DOES NOT WORK

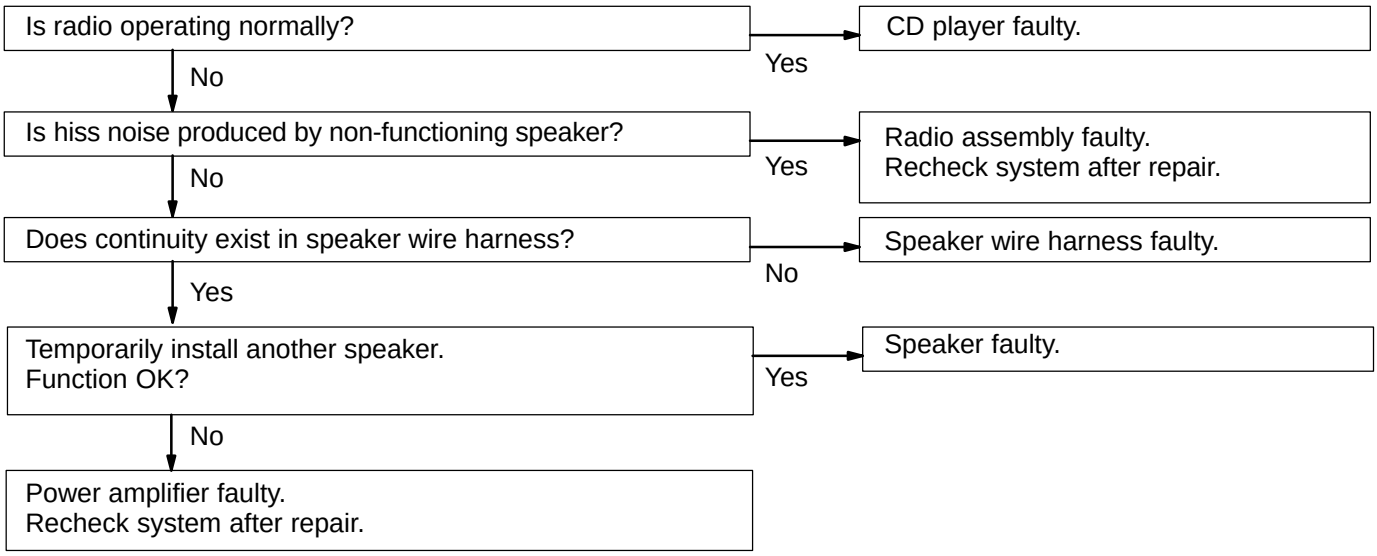

26	Noise	NOISE OCCURS

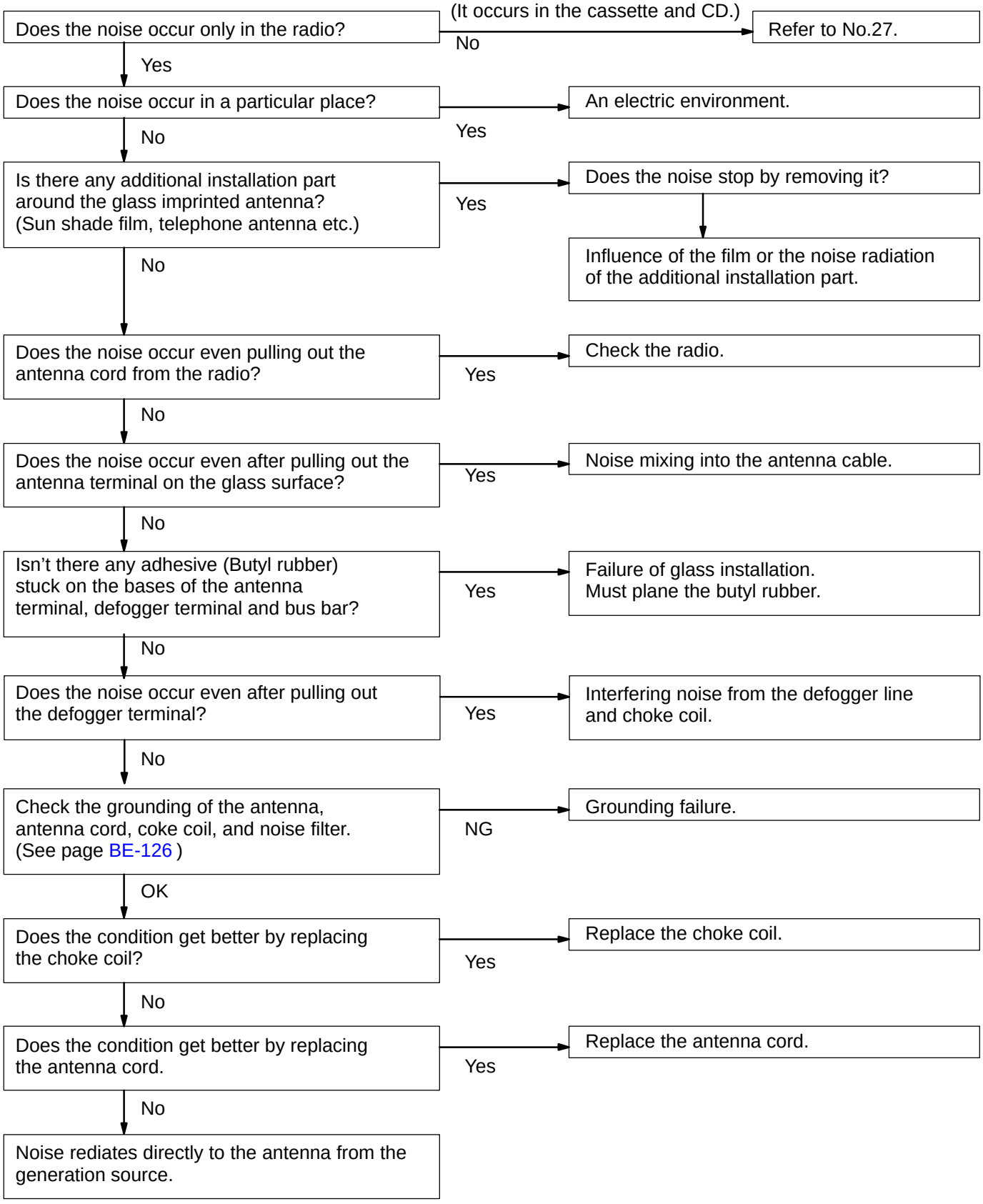

27	Noise	NOISE PRODUCED BY VIBRATION OR SHOCK WHILE DRIVING

Is speaker properly installed?
- No → Install properly.
- Yes → Is speaker properly installed?
  - No → Install properly.
  - Yes → With vehicles stationary lightly tap each system. Is noise produced?
    - Yes → Each system faulty.
    - No → Noise is produced from static eletricity accumulating in the vehicle body.

28	Noise	NOISE PRODUCED WHEN ENGINE STARTS

Whistling noise which becomes high-pitched when accelerator strongly depressed, disappears shortly after engine stops.
- Yes → Generator noise.
- No → Whining noise occurs when A/C is operating.
  - Yes → A/C noise.
  - No → Scratching noise occurs during sudden acceleration, driving on rough roads or when ignition switch is turned ON.
    - Yes → Fuel gauge noise.
    - No → Clicking sound is heard when horn button is pressed, then released. Whirring/grating sound is heard when pushed continuously.
      - Yes → Horn noise.
      - No → Murmuring sound stops when engine stops.
        - Yes → Ignition noise.
        - No → Tick-tack noise occurs in co-ordination with blinking offlasher.
          - Yes → Turn signal noise.
          - No → Noise occurs during window washer operation.
            - Yes → Washer noise.
            - No → Scratching noise occurs while engine is running, and continues a while even after engine stops.
              - Yes → Engine coolant temp. gauge noise.
              - No → Scraping noise in line with wiper beat.
                - Yes → Wiper noise.
                - No → Other type of noise

BODY ELECTRICAL SYSTEM

BE04P-05

PRECAUTION

HINT:

Take care to observe the following precautions when performing inspections or removal and replacement of body electrical related parts.

1. HEADLIGHT SYSTEM

Halogen bulbs have pressurized gas inside and require special handling. They can burst if scratched or dropped. Hold a bulb only by its plastic or metal case. Don't touch the glass part of a bulb with bare hands.

2. SRS (SUPPLEMENTAL RESTRAINT SYSTEM)

The AVALON is equipped with an SRS (Supplemental Restraint System) such as the driver airbag and front passenger airbag. Failure to carry out service operation in the correct sequence could cause the SRS to unexpectedly deploy during servicing, possibly leading to a serious accident. Before servicing (including removal or installation of parts, inspection or replacement), be sure to read the precautionary notices in the RS section.

3. AUDIO SYSTEM

- If the negative (-) terminal cable is disconnected from the battery, the preset AM, FM 1 and FM 2 stations stored in memory are erased, so make sure to note the stations and reset them after the negative (-) terminal cable is reconnected to the battery.
- If the negative (-) terminal cable is disconnected from the battery, the radio, tape player and CD player will not operate as well as audio anti - theft system. Be sure to input the correct ID number so that the radio, tape player and CD player can be operated again.

4. MOBILE COMMUNICATION SYSTEM

If the vehicle is equipped with a mobile communication system, refer to precautions in the IN section.

BE0I5-03

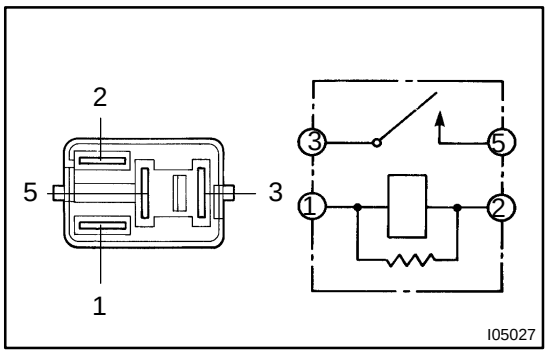

INSPECTION

INSPECT BACK-UP LIGHT RELAY CONTINUITY

Condition	Tester connection	Specified condition
Constant	1 - 2	Continuity
Apply B+ between terminals 1 and 2.	3 - 5	Continuity

If continuity is not as specified, replace the relay.

BACK-UP LIGHT SYSTEM

LOCATION

BE0I4-04

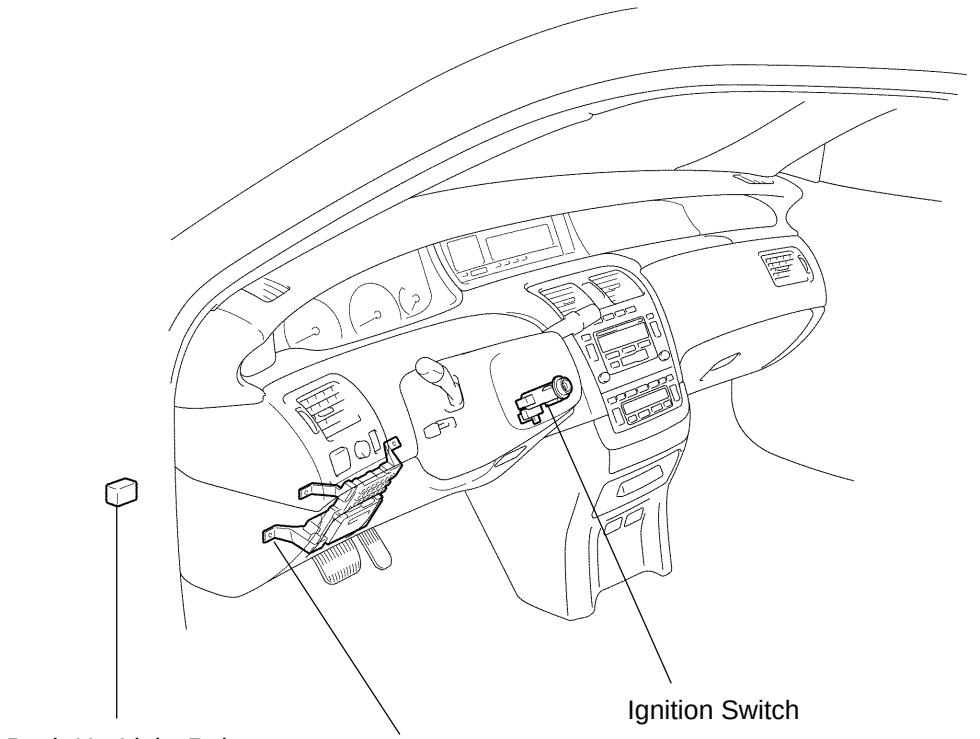

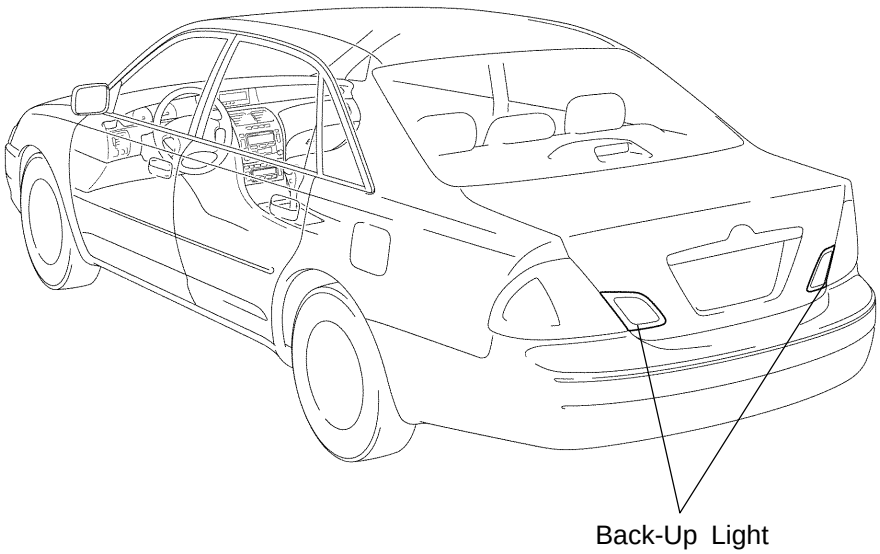

P

I12528

CLOCK

TROUBLESHOOTING

BE1EJ-01

HINT:

Troubleshoot the clock according to the table below.

Problem	No.
Clock will not operate	BE-53
Clock loses or gains time	BE-53

BE1DO-01

CIRCUIT

Combination Meter:

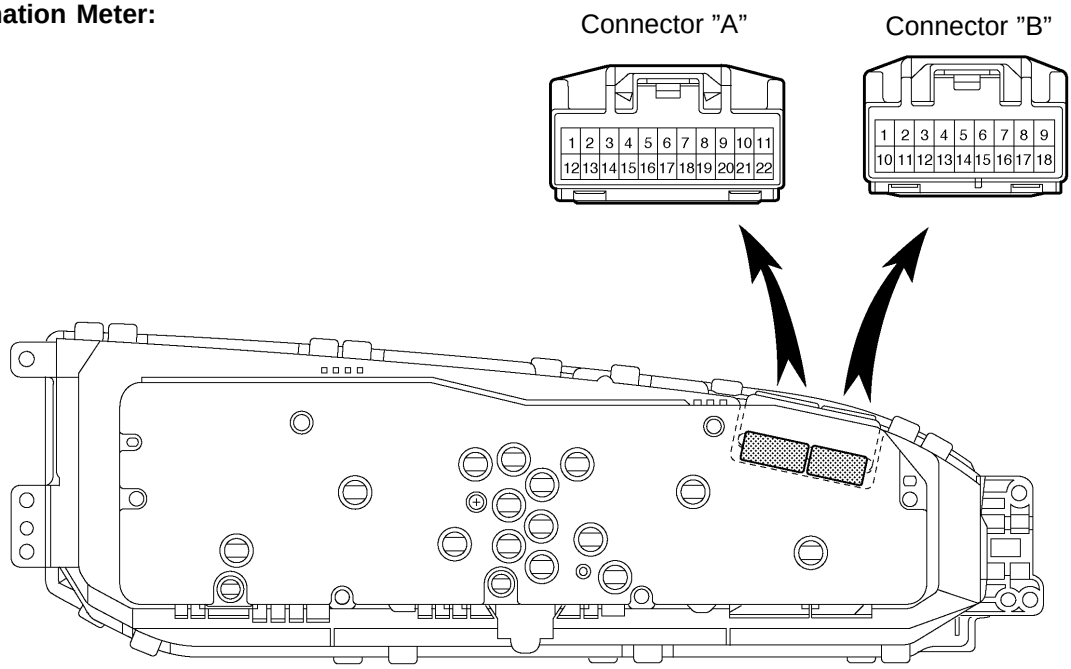

Multi Information Display:

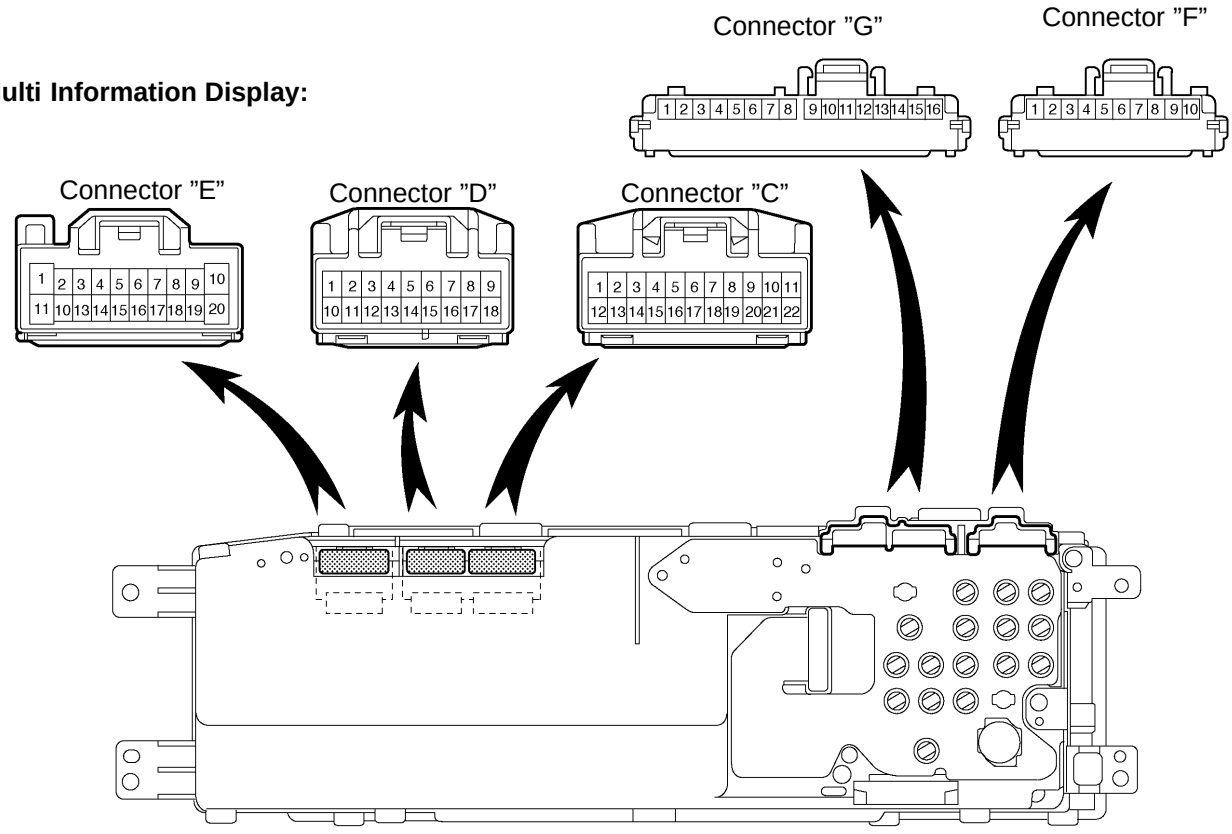

Y

I12772

Combination meter:

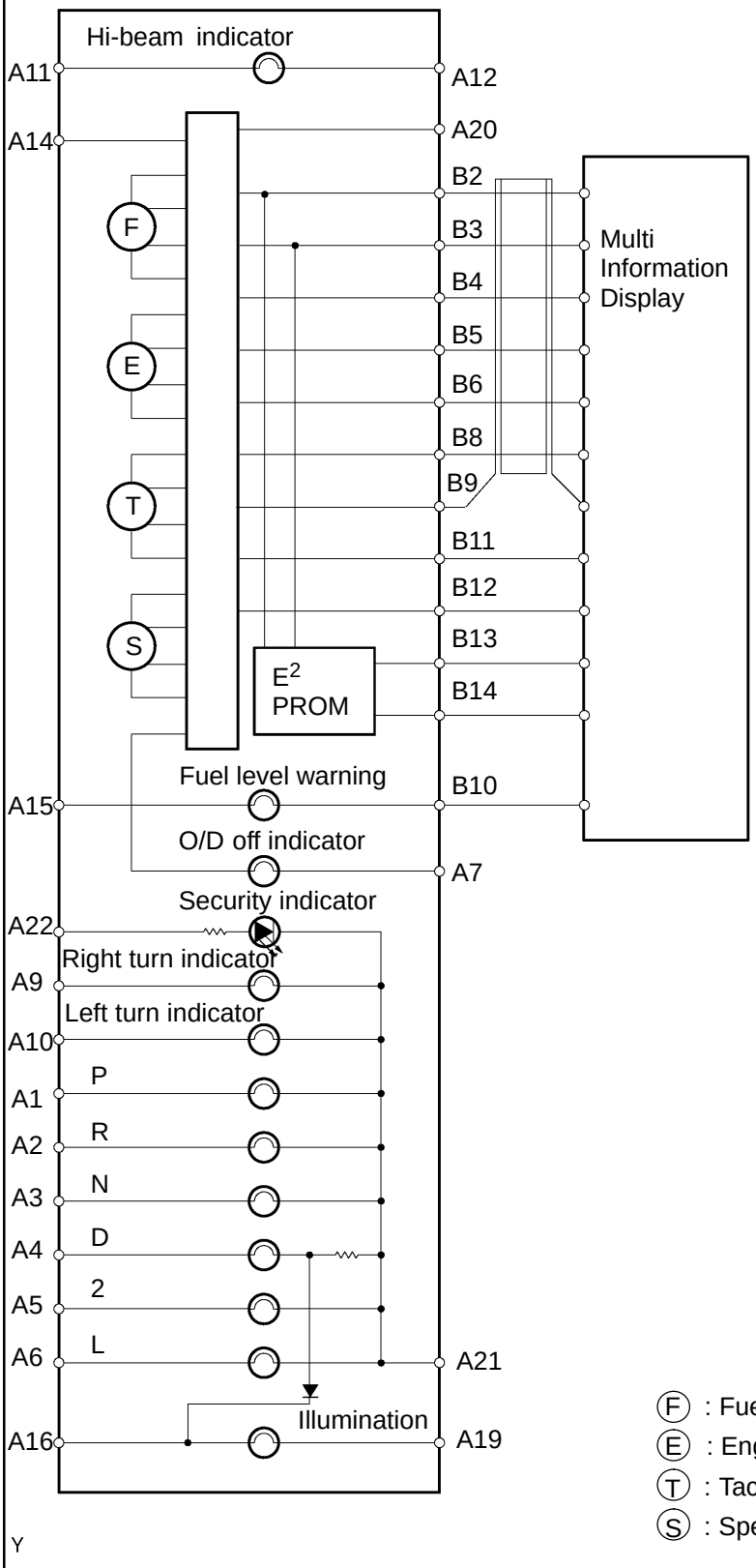

No.		Wire Connector Side
A	1	Park/Neutral position switch (P position)
	2	Park/Neutral position switch (R position)
	3	Park/Neutral position switch (N position)
	4	Park/Neutral position switch (D position)
	5	Park/Neutral position switch (2 position)
	6	Park/Neutral position switch (L position)
	7	O/D main switch
	8	-
	9	Turn signal switch (Right)
	10	Turn signal switch (Left)
	11	HEAD-LP Fuse
	12	Headlight dimmer switch
	13	-
	14	ECU-B Fuse
	15	ECU-IG Fuse
	16	F (PANEL) Fuse
	17	-
	18	-
	19	Rheostat Light Control Volume
	20	Ground
	21	Ground
	22	Theft Deterrent ECU
B	1	-
	2	Multi-information display meter
	3	Multi-information display meter
	4	Multi-information display meter
	5	Multi-information display meter
	6	Multi-information display meter
	7	-
	8	Multi-information display meter
	9	Multi-information display meter
	10	Multi-information display meter
	11	Multi-information display meter
	12	Multi-information display meter
	13	Multi-information display meter
	14	Multi-information display meter
	15	-
	16	-
	17	-
	18	-

Ⓕ : Fuel receiver gauge
Ⓔ : Engine coolant temperature gauge
Ⓣ : Tachometer
Ⓢ : Speedometer

I12781

Multi information display:

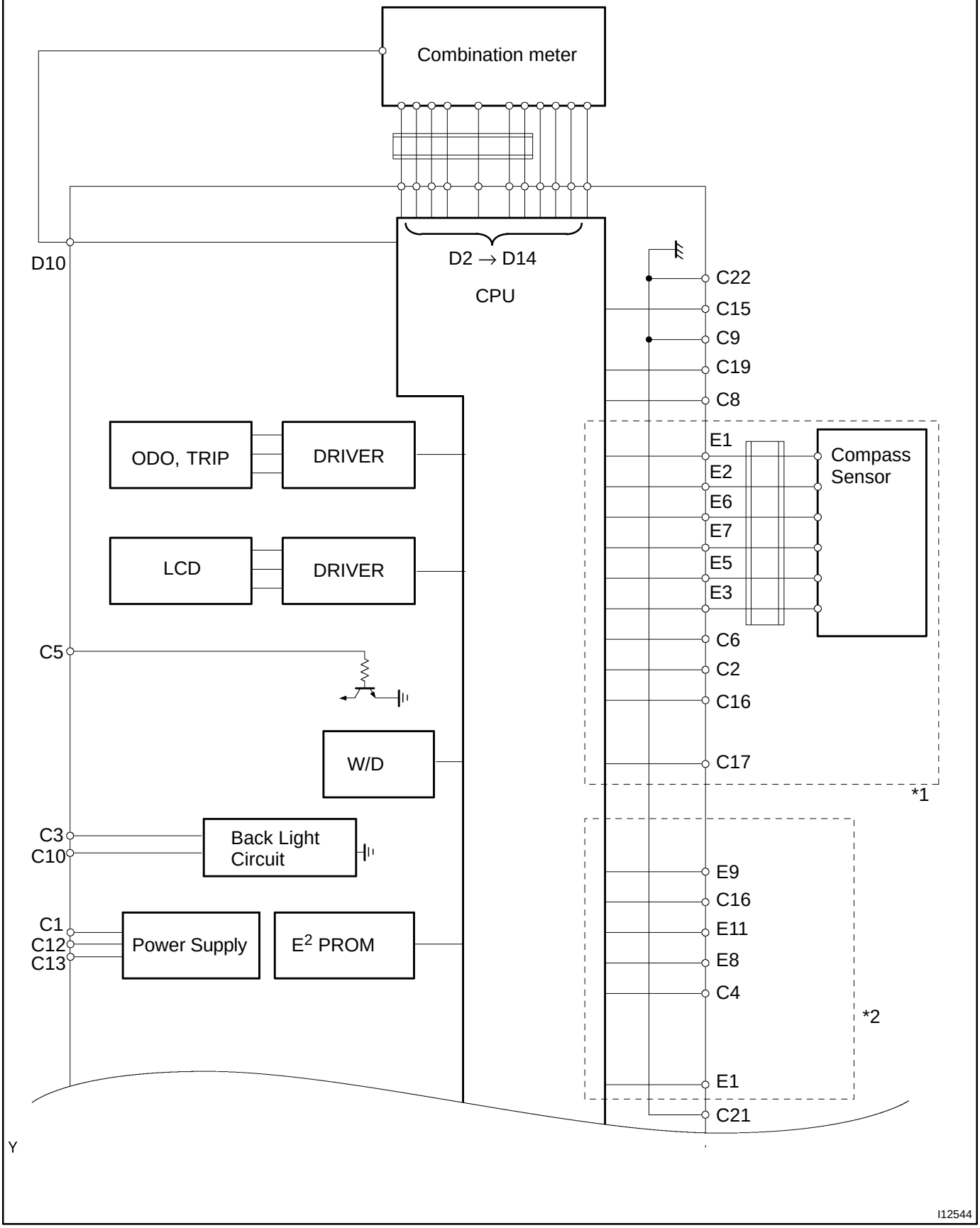

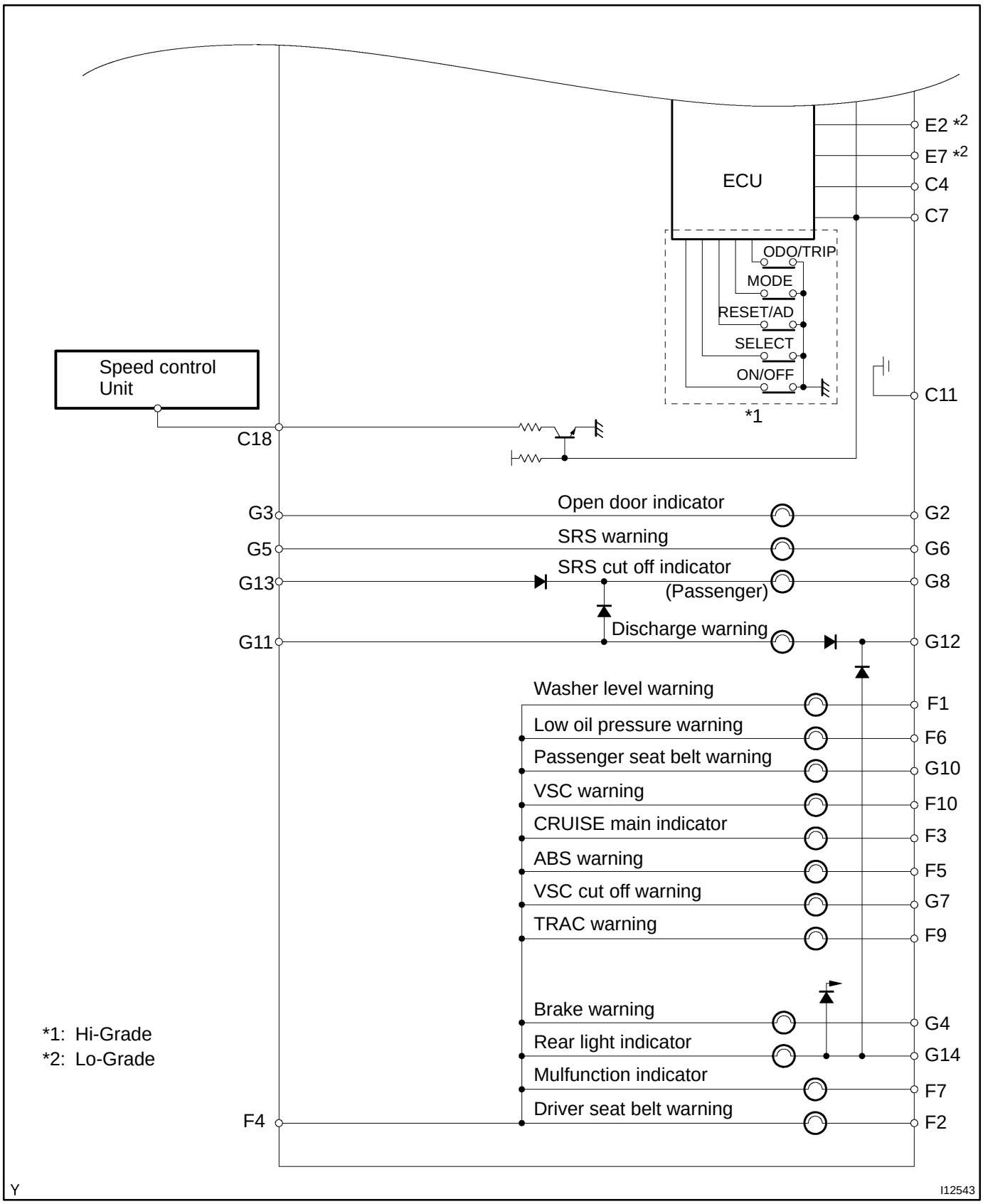
ECU
E2 *2
E7 *2
C4
C7
ODO/TRIP
MODE
RESET/AD
SELECT
ON/OFF
*1
C11
Speed control Unit
C18
G3
Open door indicator
G2
G5
SRS warning
G6
G13
SRS cut off indicator (Passenger)
G8
G11
Discharge warning
G12
Washer level warning
F1
Low oil pressure warning
F6
Passenger seat belt warning
G10
VSC warning
F10
CRUISE main indicator
F3
ABS warning
F5
VSC cut off warning
G7
TRAC warning
F9
Brake warning
G4
Rear light indicator
G14
Mulfunction indicator
F7
Driver seat belt warning
F2
F4
*1: Hi-Grade
*2: Lo-Grade
Y
I12543

No.		Wire Connector Side
C	1	ECU-IG No. 2 Fuse
	2	Injector *1
	3	F (Panel) Fuse
	4	Outside temperature sensor
	5	Starter Relay
	6	ECM *1
	7	ABS ECU
	8	Fuel sender gauge
	9	Fuel sender gauge
	10	Light control volume
	11	Ground
	12	RAD No. 1 Fuse
	13	ECU-ACC Fuse
	14	-
	15	Engine coolant temperature sendoer gauge
	16	EFI
	17	Heater control ECU *1
	18	Speed control unit
	19	Fuel sender gauge
	20	-
	21	Sender ground
	22	Ground
D	1	-
	2	Combination meter
	3	Combination meter
	4	Combination meter
	5	Combination meter
	6	Combination meter
	7	-
	8	Combination meter
	9	Combination meter
	10	Combination meter
	11	Combination meter
	12	Combination meter
	13	Combination meter
	14	Combination meter
	15	-
	16	-
	17	-
	18	-

No.		Wire Connector Side
E	1	Compass sensor *1
	1	Low oil pressure warning switch *2
	2	Compass sensor *1
	2	Compressor lock sensor *2
	3	-
	4	A/C magnet switch
	5	Compass sensor *1
	6	Compass sensor *1
	7	Evaporator temperature sensor *2
	7	Compass sensor *1
	8	A/C switch *2
	9	A/C indicator *2
	10	-
	11	ECM
	12	-
	13	-
	14	-
	15	-
	16	-
	17	-
	18	-
	19	-
	20	-

*1: Hi Grade
*2: Lo Grade

No.		Wire Connector Side
F	1	Washer fluid level warning switch
	2	Body ECU
	3	Brake fluid level warning switch
	4	GAUGE Fuse
	5	ABS ECU
	6	Lo oil pressure warning switch
	7	ECM
	8	-
	9	TRAC
	10	VSC ECU
G	1	-
	2	Driver's door courtesy switch
	3	DOME Fuse
	4	Cruise ECU
	5	AIR BAG WRN Fuse
	6	Airbag ECU
	7	ABS&BA&DRAC&VSC ECU
	8	-
	9	-
	10	Body ECU
	11	Ignition switch
	12	Generator L terminal
	13	-
	14	Light failure Sensor
	15	-
	16	-

BE1DQ-01

COMPONENTS

Multi Information Display:

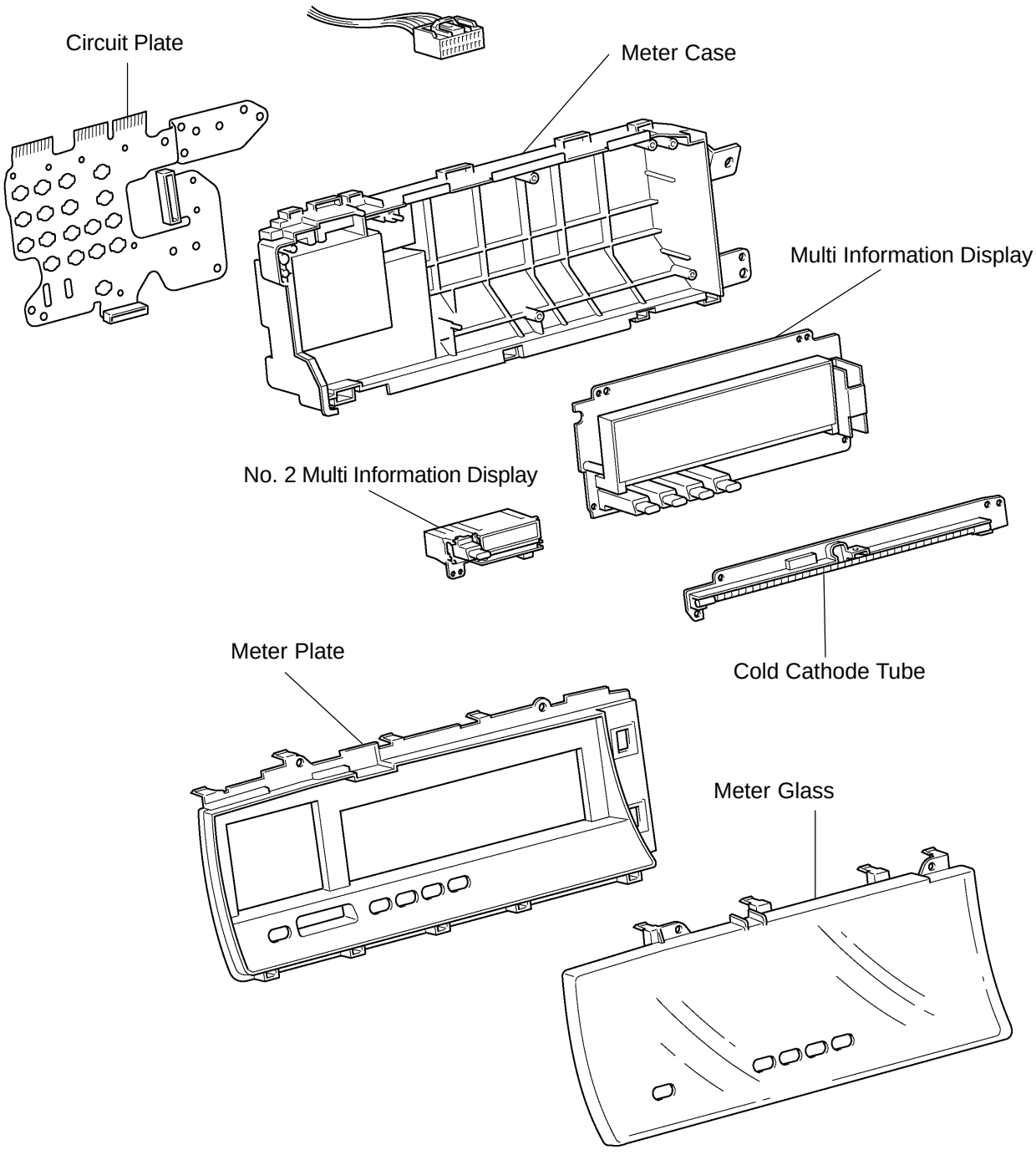

Y

I12773

Combination Meter:

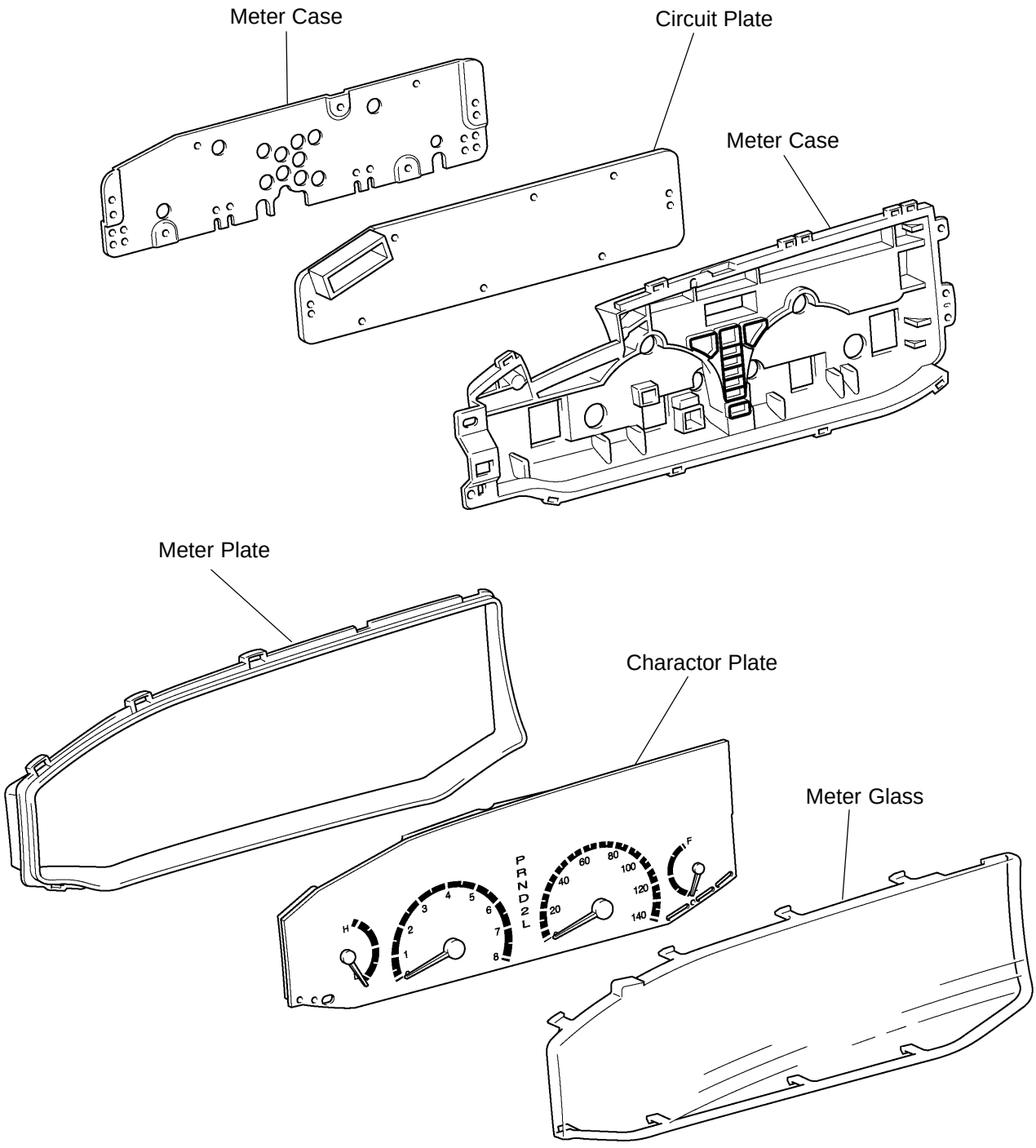

BE1DR-01

DISASSEMBLY

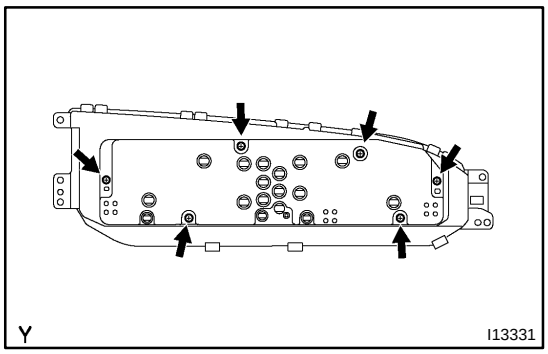

1. COMBINATION METER COVER:

(a) Remove the 6 screws.

(b) Remove the combination meter cover.

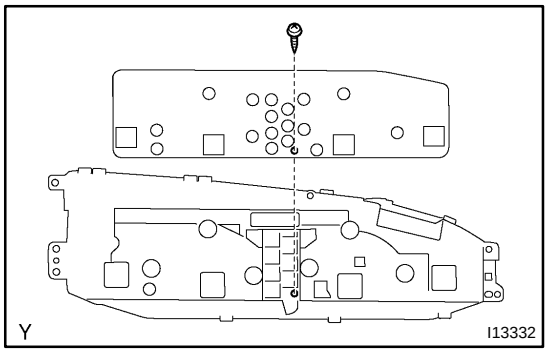

(c) Remove the screw.

(d) Remove the combination meter circuit plate.

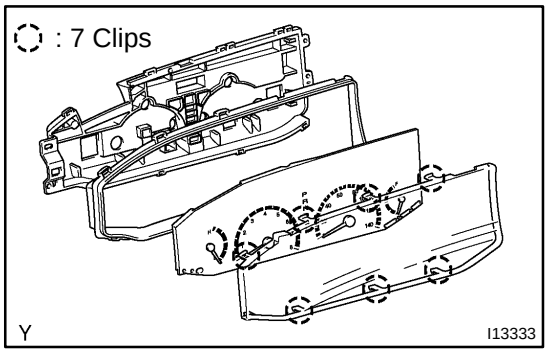

(e) Remove combination meter glass and hood.

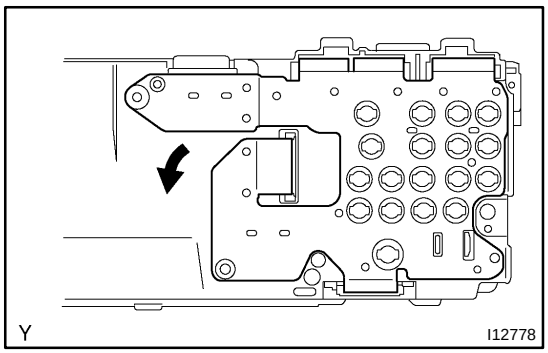

2. MULTI INFORMATION DISPLAY:

(a) Remove the circuit plate.

(b) Disconnect the connector.

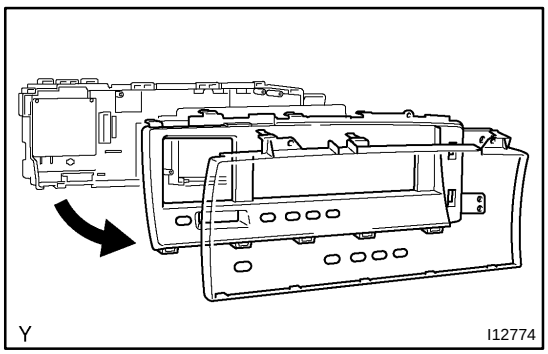

(c) Remove the multi information display glass and plate.

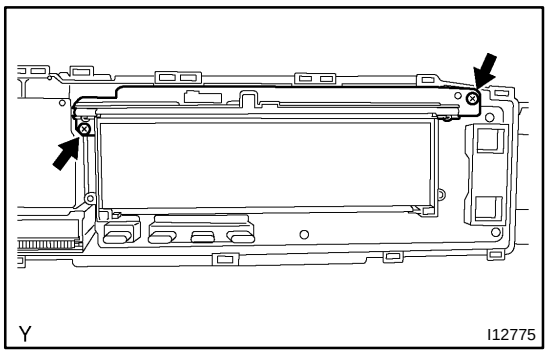

(d) Remove the 2 screws.
(e) Disconnect the cold cathode tube with plate.

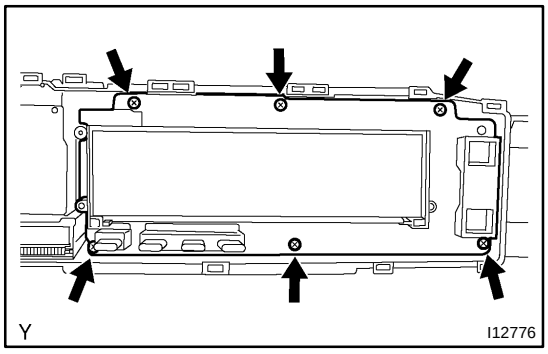

(f) Remove the 6 screws.
(g) Remove the multi information display.

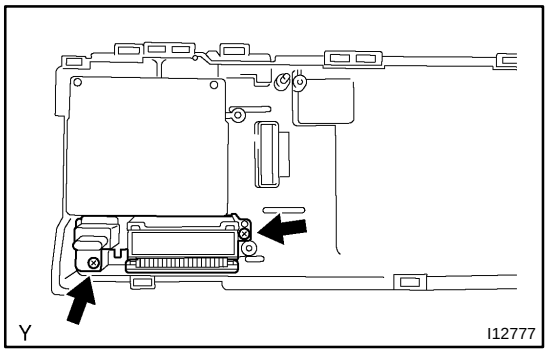

(h) Remove the 2 screws.
(i) Remove the No. 2 multi information display.

BE1DS-01

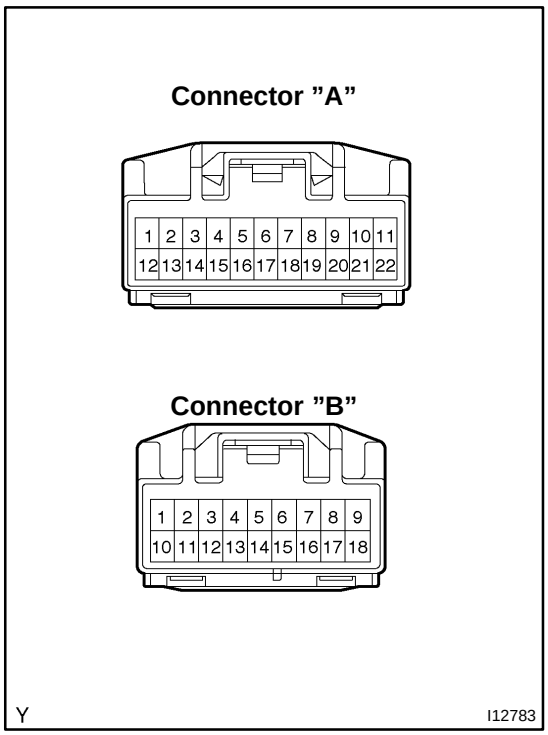

INSPECTION

1. INSPECT COMBINATION METER CIRCUIT

Disconnect connector "A" and "B" from the combination meter and inspect the connectors on the wire harness side as shown in the table.

Tester connection	Condition	Specified condition
A11 - Ground	Headlight Dimmer switch HI	Battery positive voltage
A14 - Ground	Constant	Battery positive voltage
A15 - Ground	Ignition switch ON	Battery positive voltage
A16 - Ground	Light control switch TAIL or HEAD	Battery positive voltage
A7 - Ground	O/D main switch ON	Continuity
	O/D main switch OFF	No continuity
A19 - Ground	Ignition switch ON and rheostat light control volume OFF	4.5 5.5 V
	Ignition switch ON and rheostat light control volume ON	No voltage
A20 - Ground	Constant	Continuity
A21 - Ground	Constant	Continuity

If circuit is not as specified, wiring diagram and inspect the circuits connected to other parts.

2. INSPECT MULTI INFORMATION DISPLAY CIRCUIT

Disconnect connector "C", "D", "E", "F", "G" from the multi information display and inspect the connectors on the wire harness side as shown in the table.

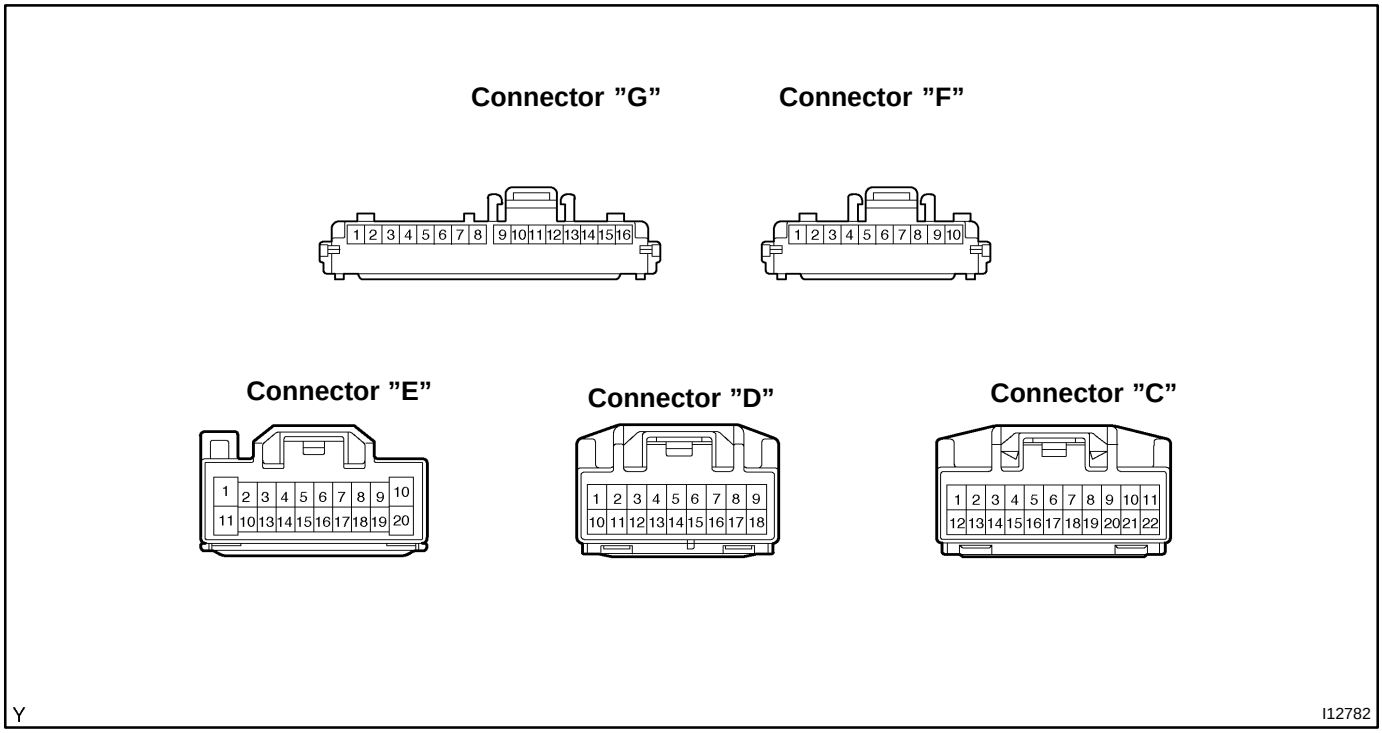

Tester connection	Condition	Specified condition
C1 - Ground	Ignition switch OFF or ACC	No voltage
	Ignition switch ON	Battery positive voltage
C3 - Ground	Light control switch TAIL or HEAD	Battery positive voltage
C4 - C21	Outside temperature a + 25 ˚C (77 ˚F)	Resistance 1.6 - 1.8 kΩ
C5 - Ground	Engine running	Battery positive voltage
	Engine stopped	No voltage
C8 - C9	Ignition switch ON and fuel sender gauge flat UP	0.3 - 0.6 V
	Ignition switch ON and fuel sender gauge float DOWN	4.9 - 6.9 V
C9 - C19	Constant	Continuity
C10 - Ground	Ignition switch ON and rheostat ON	No voltage
C10 - Ground	Ignition switch ON and rheostat OFF	4.5 - 5.5 V
C11 - Ground	Constant	Continuity
C12 - Ground	Constant	Battery positive voltage
C13 - Ground	Ignition switch ACC or ON	Battery positive voltage
	Ignition switch OFF	No voltage
F1 - Ground	Window washer level warning switch ON	Continuity
F4 - Ground	Ignition switch OFF or ACC	No voltage
F4 - Ground	Ignition switch ON	Battery positive voltage
G2 - Ground	Door courtesy switch ON	Continuity
G3 - Ground	Constant	Battery positive voltage
G5 - Ground	Constant	Battery positive voltage

G11 - Ground	Ignition switch ON	Battery positive voltage
	Ignition switch OFF or ACC	No voltage
G12 - Ground	Engine running	Battery positive voltage

If circuit is not as specified, wiring diagram and inspect the circuits connected to other parts.

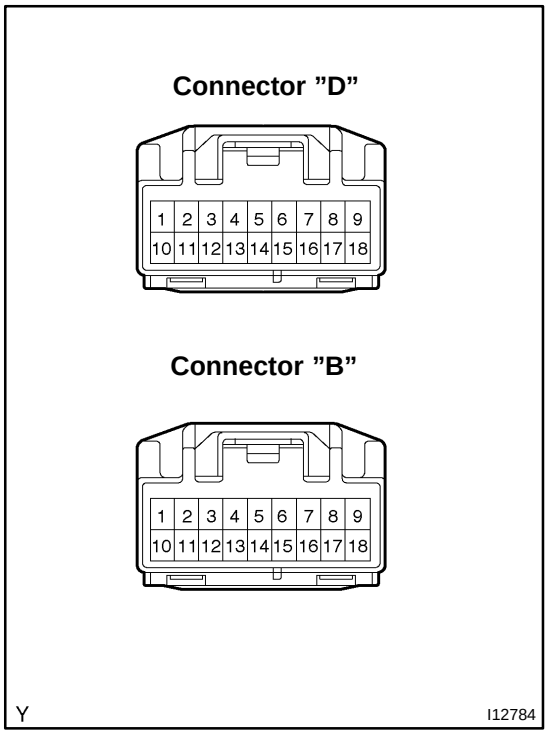

3. INSPECT BETWEEN COMBINATION METER AND MULTI INFORMATION DISPLAY CIRCUIT

Disconnect connector ”B”, ”D” from the multi information display and combination meter inspect the connectors on the wire harness side as shown in the table.

Tester connection	Specified condition
B2 - D2	Continuity
B3 - D3	Continuity
B4 - D4	Continuity
B5 - D5	Continuity
B6 - D6	Continuity
B8 - D8	Continuity
B9 - D9	Continuity
B10 - D10	Continuity
B11 - D11	Continuity
B12 - D12	Continuity
B13 - D13	Continuity
B14 - D14	Continuity

If circuit is not as specified, wiring diagram and inspect the circuits connected to other parts.

4. INSPECT SPEEDOMETER ON-VEHICLE

Using a speedometer tester, inspect the speedometer for allowable indication error and check the operation of the odometer.
HINT:
Tire wear and tire over or under inflation will increase the indication error.

USA (mph)		CANADA TAIWAN (km/h)	
Standard indication	Allowable range	Standard indication	Allowable range
20	18 - 24	20	17 - 24
40	38 - 44	40	38 - 46
60	58 - 66	60	57.5 - 67
80	78 - 88	80	77 - 88
100	98 - 110	100	96 - 109
120	118 - 132	120	115 - 130
		140	134 - 151.5
		160	153 - 173

If error is excessive, replace the speedometer.

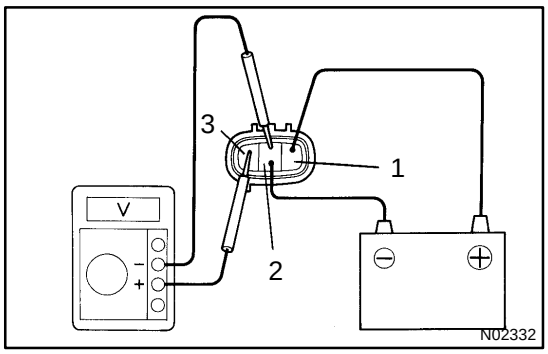

5. INSPECT VEHICLE SPEED SENSOR OPERATION

(a) Connect the positive (+) lead from battery to terminal 1 and negative (-) lead to terminal 2.
(b) Connect the positive (+) lead from tester to terminal 3 and the negative (-) lead to terminal 2.
(c) Rotate the shaft.
(d) Check that there is voltage change from approx. 0 V to 11 V or more between terminals 2 and 3.

HINT:
The voltage change should be 4 times for every revolution of the speed sensor shaft.
If operation is not as specified, replace the sensor.

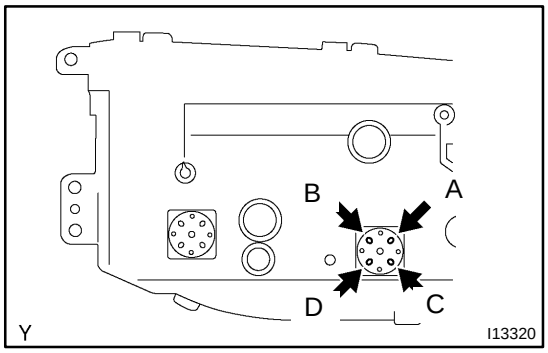

6. INSPECT SPEEDOMETER RESISTANCE

Measure the resistance between terminals with fixing pointer to the stopper.

Tester connection	Resistance (Ω)
A - B	250
C - D	250

If resistance value is not as the specified, replace the meter.

7. INSPECT TACHOMETER/ON-VEHICLE

(a) Connect a tune-up test tachometer, and start the engine.

NOTICE:

- **Reversing the connection of the tachometer will damage the transistors and diodes inside.**
- **When removing or installing the tachometer, be careful not to drop or subject it to heavy shocks.**

(b) Compare the tester and tachometer indications.

DC 13.5 V 25 ˚C at (77˚F)

Standard indication	Allowable range
700	630 - 770
1,000	900 - 1,100
2,000	1,850 - 2,150
3,000	2,800 - 3,200
4,000	3,800 - 4,200
5,000	4,800 - 5,200
6,000	5,750 - 6,250
7,000	6,700 - 7,300

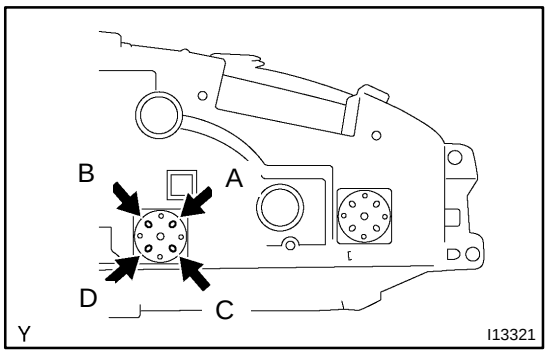

8. INSPECT TACHOMETER RESISTANCE

Measure the resistance between terminals with fixing pointer to the stopper.

Tester connection	Resistance (Ω)
A - B	250
C - D	250

If resistance value is not as specified, replace the meter.

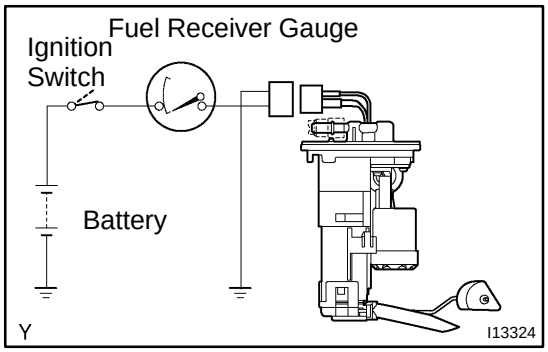

9. INSPECT FUEL RECEIVER GAUGE OPERATION

(a) Disconnect the connector from the main sender gauge.

(b) Turn the ignition switch ON, check that the receiver gauge needle indicates EMPTY.

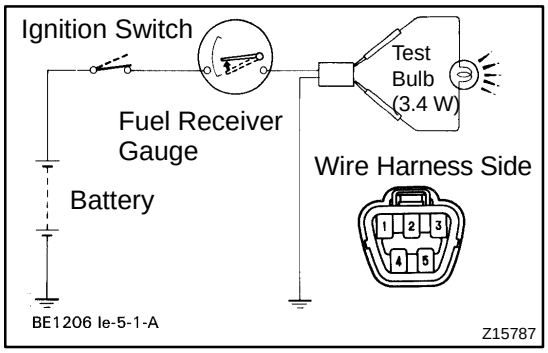

(c) Connect terminals 2 and 3 on the wire harness side connector through a 3.4 W test bulb.

(d) Turn the ignition switch ON, check that the bulb lights up and receiver gauge needle moves toward the full side.

HINT:

Because of the silicon oil in the gauge, it will take a short time for needle to stabilize.

If operation is not as specified, inspect the receiver gauge resistance.

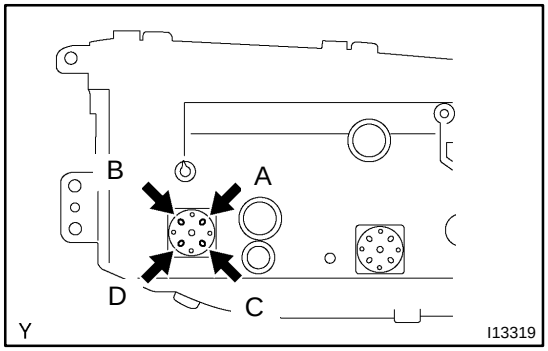

10. INSPECT FUEL RECEIVER GAUGE RESISTANCE

Measure the resistance between terminals with fixing pointer to the stopper.

Tester connection	Resistance (Ω)
A - B	250
C - D	250

If resistance value is not as specified, replace the receiver gauge.

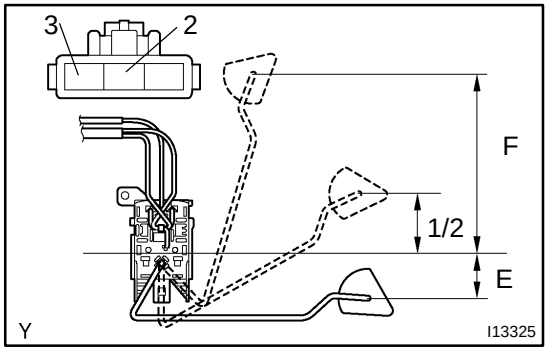

11. INSPECT FUEL SENDER GAUGE RESISTANCE

Measure the resistance between terminals 3 and 2 for each float position.

Float position mm (in.)	Resistance (Ω)
F: Approx. 91.1 (1.36) ± 3 (0.12)	Approx. 2.0 ± 1.0
1/2: Approx. 34.2 (2.06) ± 3 (0.12)	Approx. 26.1 ± 3.0
E: Approx. 30.8 (5.31) ± 3 (0.12)	Approx. 48.7 ± 1.0

If resistance value is not as specified, replace the sender gauge.

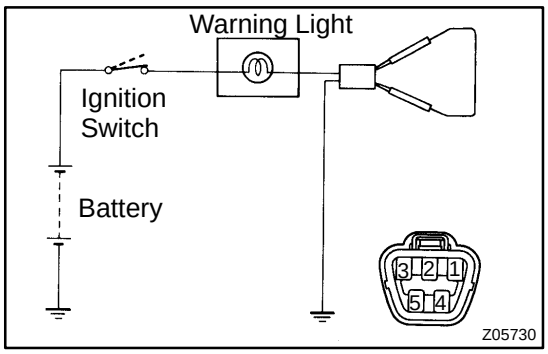

12. INSPECT FUEL LEVEL WARNING LIGHT

(a) Disconnect the connector from the sender gauge.
(b) Connect terminals 1 and 3 on the wire harness side connector.
(c) Turn the ignition switch ON, check that the warning light lights up.

If the warning light does not light up, test the bulb or inspect wire harness.

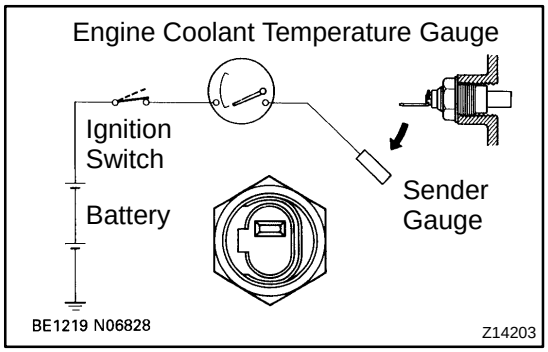

13. INSPECT ENGINE COOLANT TEMPERATURE RECEIVER GAUGE OPERATION

(a) Disconnect the connector from the sender gauge.
(b) Turn the ignition switch ON, check that the receiver gauge needle indicates COOL.

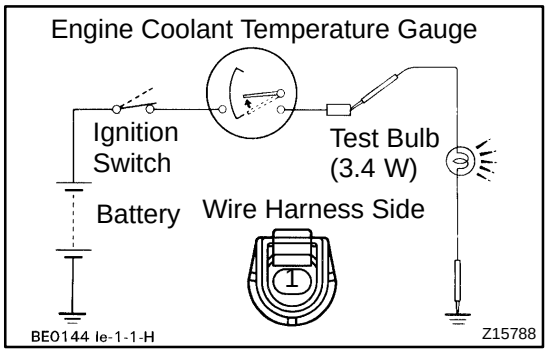

(c) Ground terminal on the wire harness side connector through a 3.4 W test bulb.
(d) Turn the ignition switch ON, check that the bulb lights up and the receiver gauge needle moves toward the hot side.

If operation is as specified, replace the sender gauge.
Then recheck the system.
If operation is not as specified, measure the receiver gauge resistance.

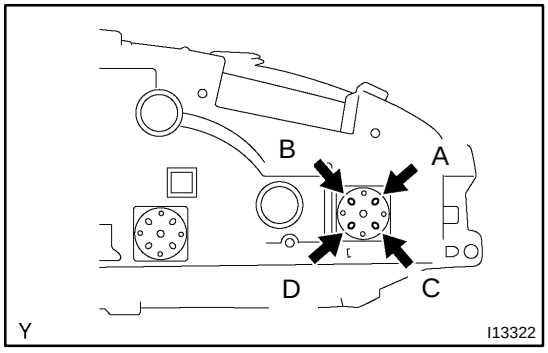

14. INSPECT ENGINE COOLANT TEMPERATURE RECEIVER GAUGE RESISTANCE

Measure the resistance between terminals with fixing pointer to the stopper.

Tester connection	Resistance (Ω)
A - B	250
C - D	250

If resistance value is not as specified, replace the receiver gauge.

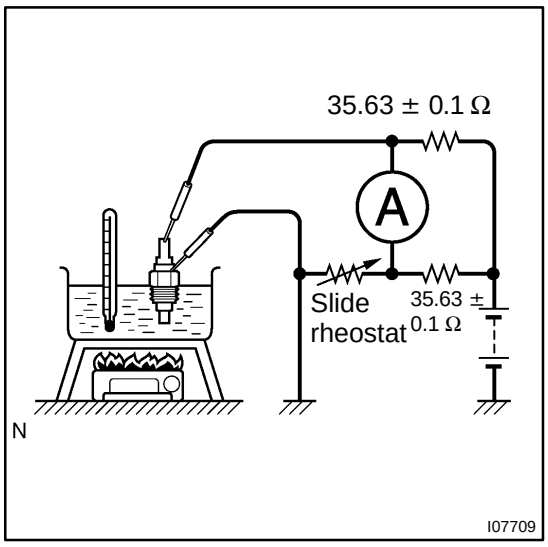

15. INSPECT ENGINE COOLANT TEMPERATURE SENDER GAUGE RESISTANCE

Connect the wire harness as shown in the illustration, and adjust the ammeter pointer to indicate ”0” using the slide rheostat, then read the rheostat indication.

Temperature ˚C (˚F)	Resistance (Ω)
50 (122.0)	160 - 240
120 (248.0)	17.1 - 21.2

If resistance value is not as specified, replace the engine coolant sender gauge.

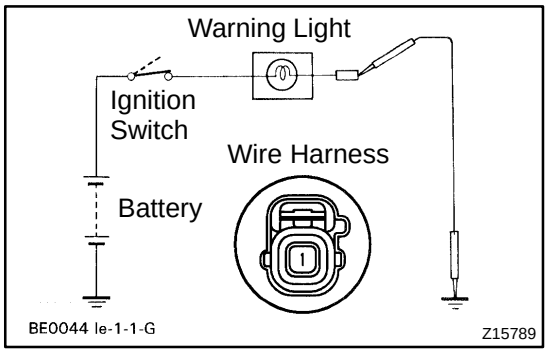

16. INSPECT LOW OIL PRESSURE WARNING LIGHT

(a) Disconnect the connector from the warning switch and ground terminal on the wire harness side connector.

(b) Turn the ignition switch ON, check that the warning light lights up.

If the warning light does not light up, test the bulb or inspect wire harness.

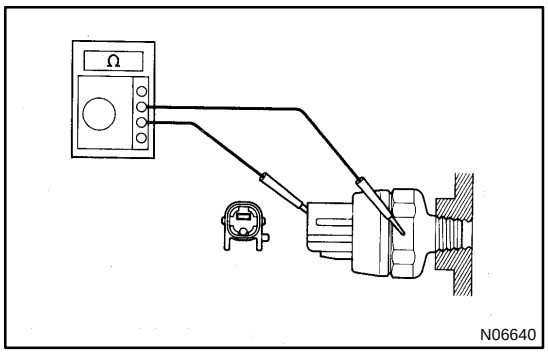

17. INSPECT LOW OIL PRESSURE WARNING SWITCH OPERATION

(a) Check that continuity exists between the terminal and ground with the engine stopped.

(b) Check that no continuity exists between the terminal and ground with the engine running.

HINT:

Oil pressure should be over 29 kPa (0.35 kgf/cm^2, 4.3 psi)

If operation is not as specified, replace the switch.

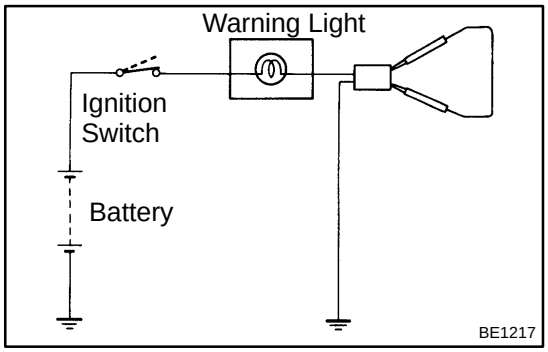

18. INSPECT BRAKE WARNING LIGHT

(a) Disconnect the connector from the brake fluid warning switch.

(b) Release the parking brake pedal.

(c) Connect the terminals on the wire harness side of the level warning switch connector.

(d) Start the engine, check that the warning light lights up.

If the warning light does not light up, test the bulb or wire harness.

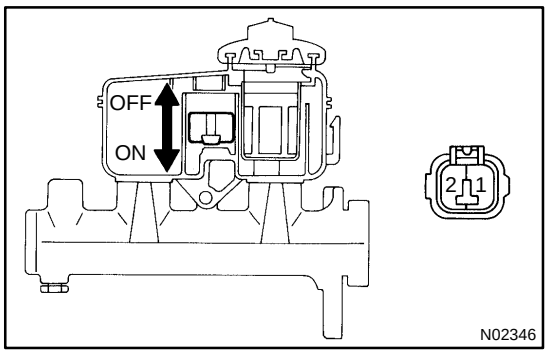

19. INSPECT BRAKE FLUID LEVEL WARNING SWITCH OPERATION

(a) Remove the reservoir tank cap and strainer.
(b) Disconnect the connector.
(c) Check that no continuity exists between the terminals with the switch OFF (float up).
(d) Use a siphon, etc. to take fluid out of the reservoir tank.
(e) Check that continuity exists between the terminals with the switch ON (float down).
(f) Pour the fluid back in the reservoir tank.

If operation is not as specified, replace the switch.

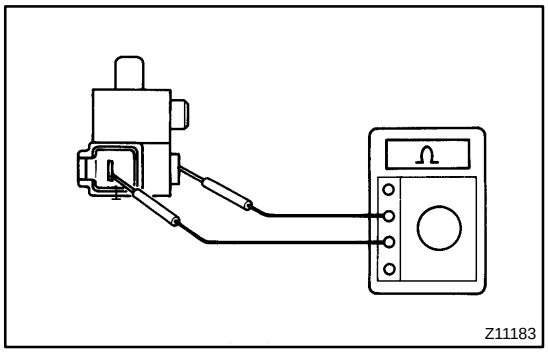

20. INSPECT PARKING BRAKE WARNING SWITCH CONTINUITY

(a) Check that continuity exists between terminal and switch body with the switch ON (switch pin released).
(b) Check that no continuity exists between terminal and switch body with the switch OFF (switch pin pushed in).

If operation is not as specified, replace the switch or inspect ground point.

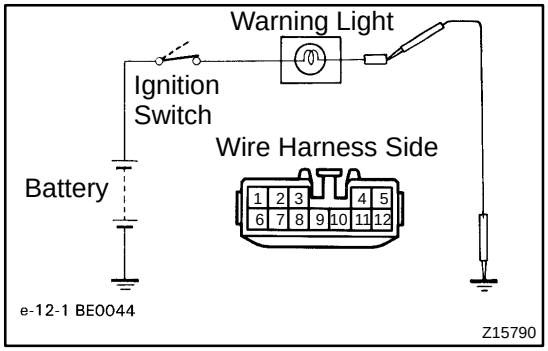

21. INSPECT REAR LIGHTS WARNING LIGHT

(a) Disconnect the connector from the light failure sensor and ground terminal 4 on the wire harness side connector.
(b) Start the engine, check that the warning light lights up.

If the warning light does not light up, test the bulb or inspect wire harness.

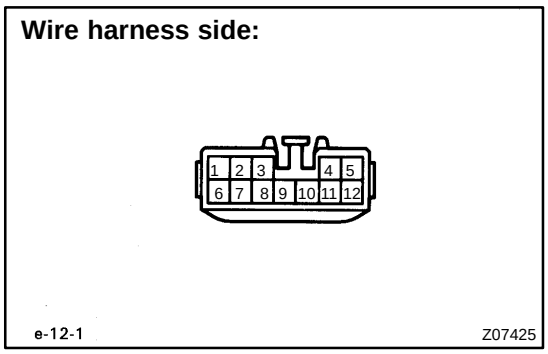

22. INSPECT LIGHT FAILURE SENSOR CIRCUIT

Disconnect the connector from the sensor and inspect the connector on the wire harness side, as shown.

Tester connection	Condition	Specified condition
1 - Ground	Constant	Continuity*
2 - Ground	Constant	Continuity*
9 - Ground	Constant	Continuity*
10 - Ground	Constant	Continuity*
11 - Ground	Constant	Continuity
12 - Ground	Constant	Continuity*
3 - Ground	Light control switch OFF	No voltage
3 - Ground	Light control switch TAIL or HEAD	Battery positive voltage
4, 8 - Ground	Ignition switch LOCK or ACC	No voltage
4, 8 - Ground	Ignition switch ON	Battery positive voltage
7 - Ground	Stop light switch OFF	No voltage
7 - Ground	Stop light switch ON	Battery positive voltage

*: There is resistance because this circuit is grounded through the bulb.

If the circuit is as specified, replace the sensor.

If the circuit is not as specified, inspect the circuits connected to other parts.

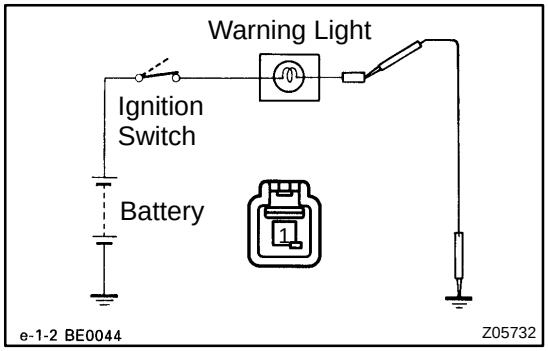

23. INSPECT OPEN DOOR WARNING LIGHT

Disconnect the connector from the door courtesy switch, and ground terminal 1 on the wire harness side connector and check that the warning light lights up.

If the warning light does not light up, inspect the bulb or wire harness.

24. INSPECT DOOR COURTESY SWITCH

(See page BE-31)

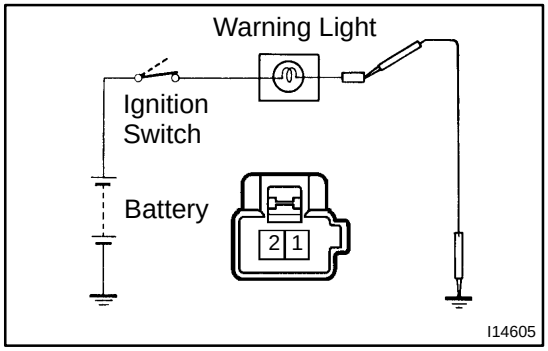

25. INSPECT SEAT BELT WARNING LIGHT

(a) Disconnect the connector from the terminals buckle switch and ground terminal on the wire harness side connector as shown in the illustration.

(b) Turn the ignition switch ON and check that the warning light lights up.

If the warning light does not light up, check the bulb circuit.

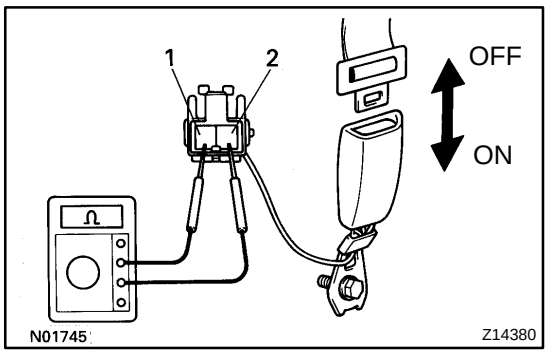

26. INSPECT BUCKLE SWITCH CONTINUITY

(a) Check that continuity exists between the terminals on the switch side connector with the switch ON (belt unfastened).

(b) Check that no continuity exists between the terminals on the switch side connector with the switch OFF (belt fastened).

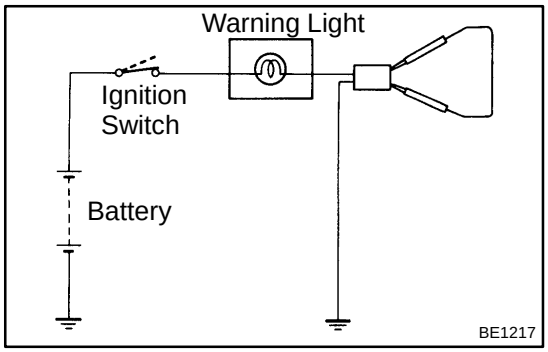

27. INSPECT WASHER LEVEL WARNING LIGHT

(a) Disconnect the connectors from the level warning switch.

(b) Connect terminals on the wire harness side connector of the level warning switch connector.

(c) Turn the ignition switch ON, check that the warning light come on.

If the warning light does not light up, test the bulb.

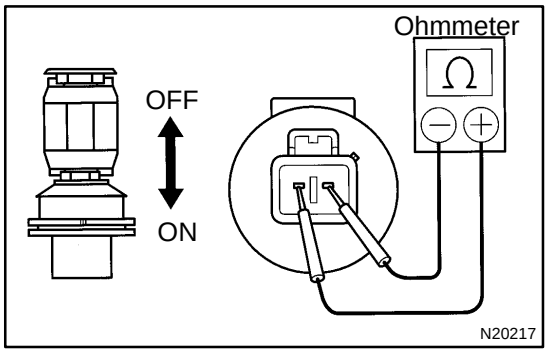

28. INSPECT WASHER LEVEL WARING SWITCH

(a) Check that no continuity exists between terminals with the switch OFF (float up).

(b) Check that continuity exists between terminals with the switch ON (float down).

If operation is not as specified, replace the switch.

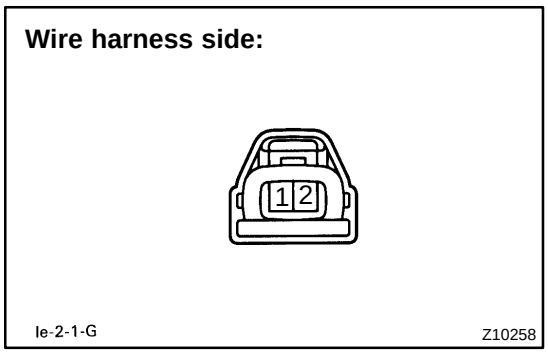

29. INSPECT WASHER FLUID LEVEL WARNING SWITCH CIRCUIT

Disconnect the switch connector and inspect the connector on wire harness side.

Tester connection	Condition	Specified condition
2 - Ground	Constant	Continuity

If the warning light does not light up, test the bulb or inspect wire harness.

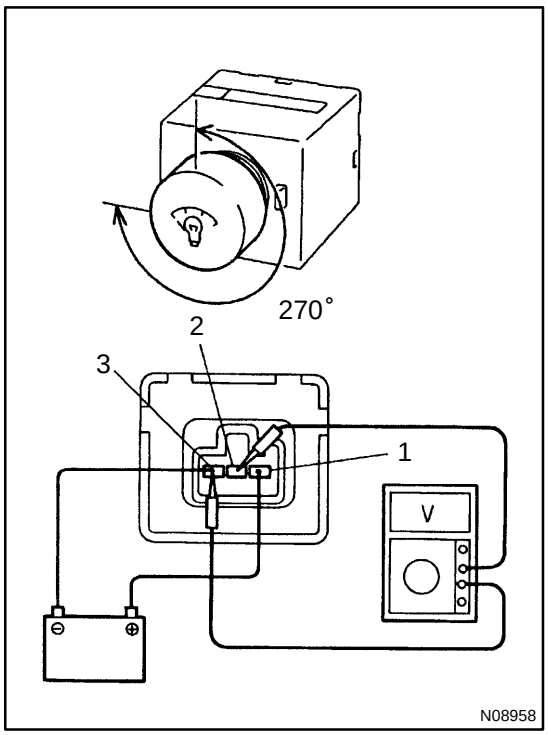

30. INSPECT LIGHT CONTROL RHEOSTAT OPERATION

(a) Connect the positive (+) lead from the battery to terminal 1 and the negative lead (-) to terminal 3.

(b) Connect the positive (+) lead from the voltmeter to terminal 2 and the negative lead (-) to terminal 3.

(c) Turn the rheostat knob and check that the voltage changes.

If operation is not as specified, replace switch.

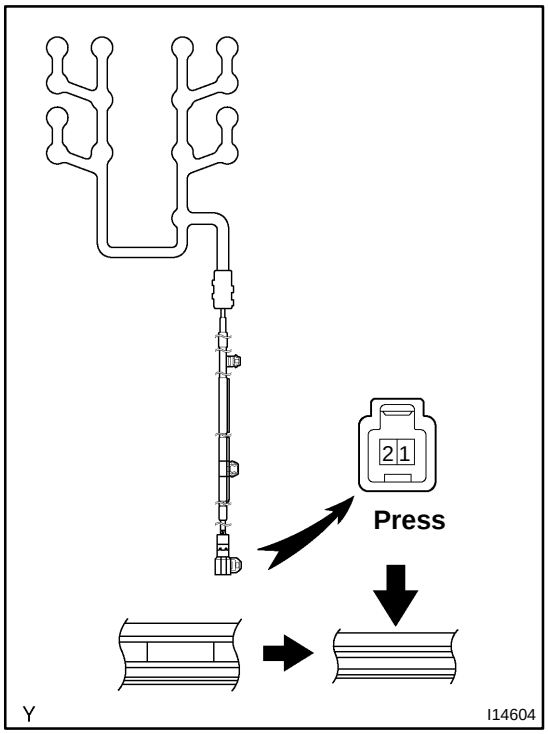

31. Passenger's seat only:
INSPECT SEAT BELT WARNING OCCUPANT DETECTION SENSOR CONTINUITY

Check that continuity exists between the terminals 1 and 2 when pressing the sensing part (electric resistance <100Ω).

If continuity is not as specified, replace the sensor.

COMBINATION METER

LOCATION

BE0IE-03

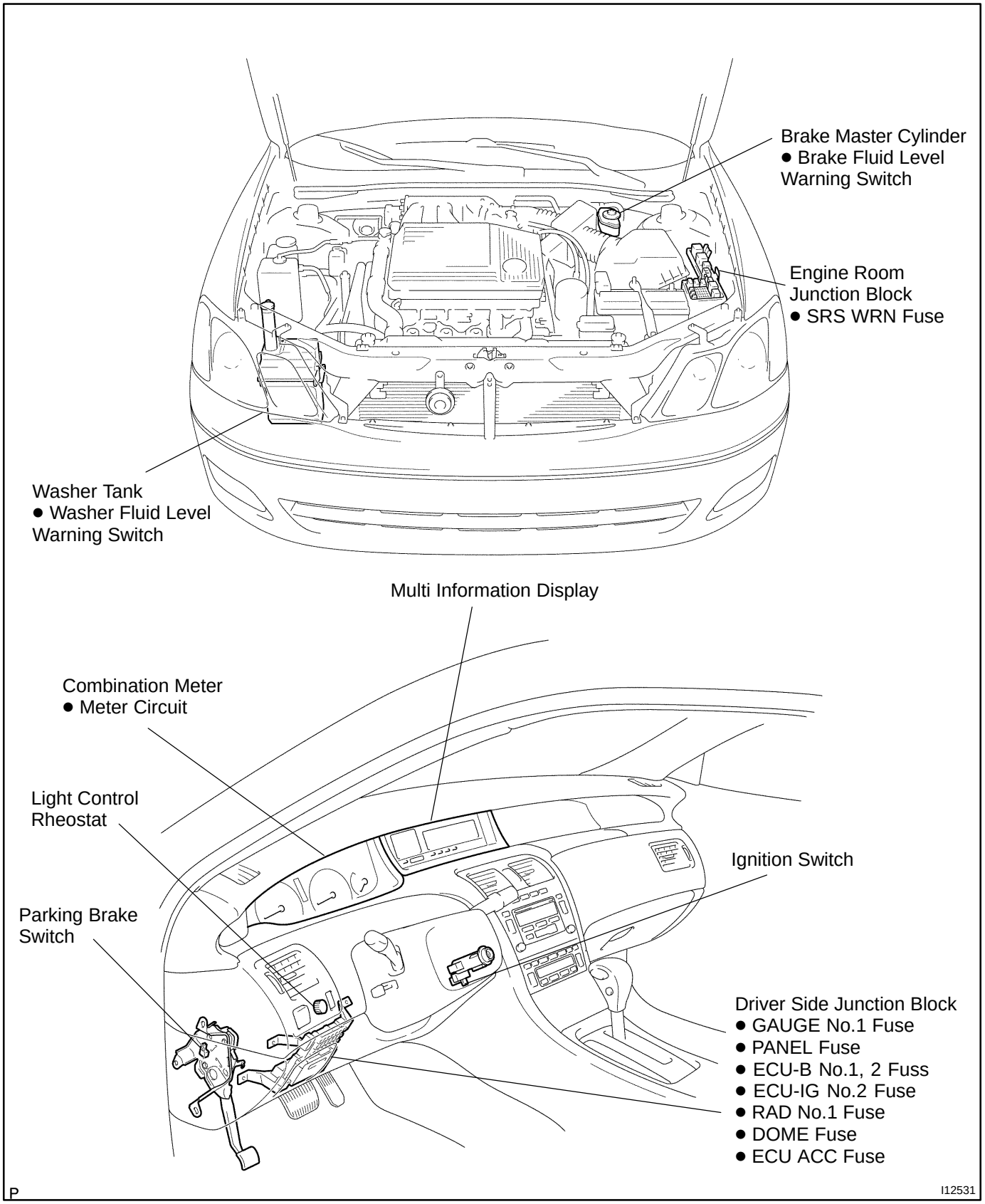

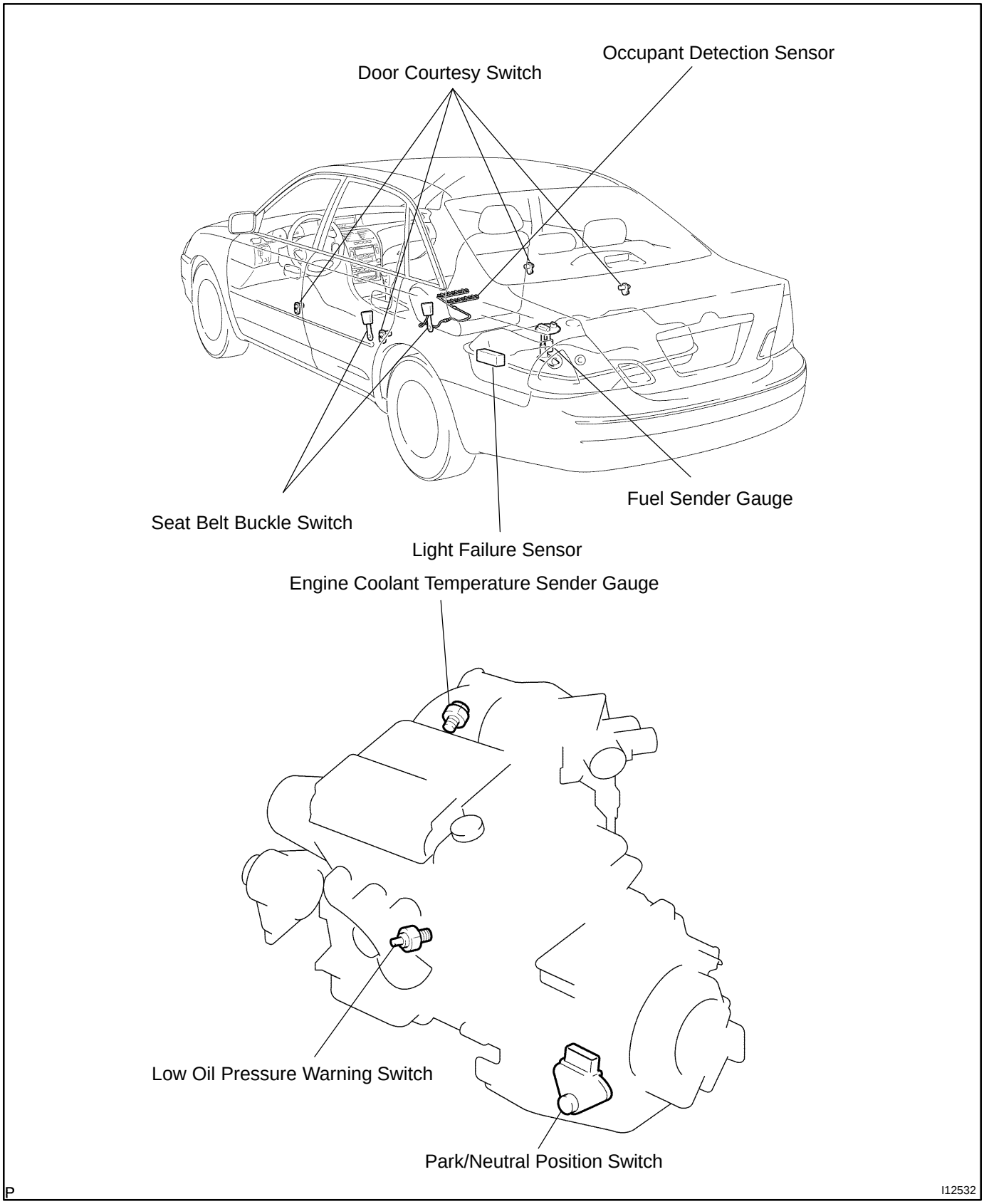
Occupant Detection Sensor
Door Courtesy Switch
Fuel Sender Gauge
Seat Belt Buckle Switch
Light Failure Sensor
Engine Coolant Temperature Sender Gauge
Low Oil Pressure Warning Switch
Park/Neutral Position Switch
P
I12532

COMPASS

ADJUSTMENT

BE216-01

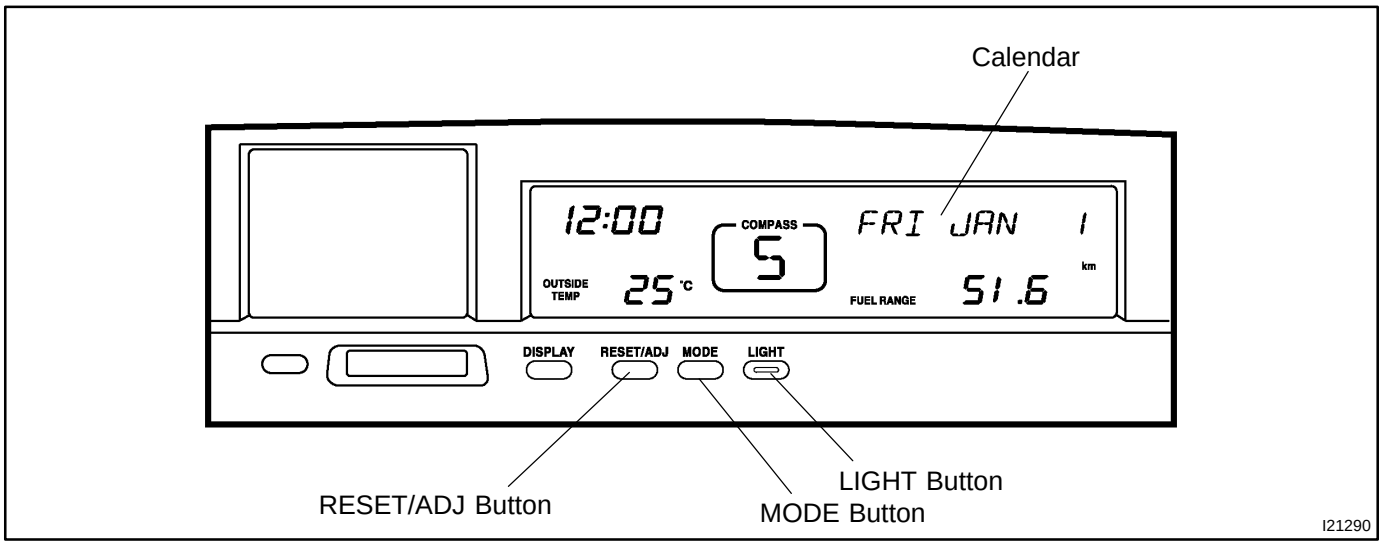

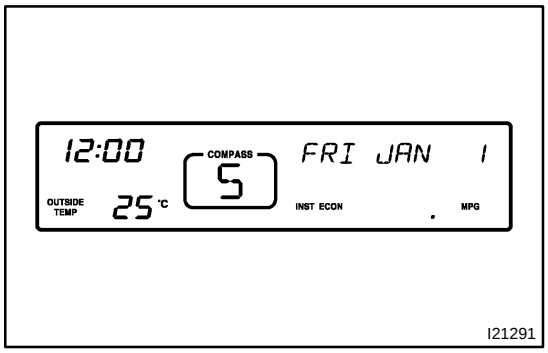

1. MULTI INFORMATION DISPLAY ILLUMINATION

Turn the ignition switch to the ON position and illuminate the all parts of the display by pushing the ”LIGHT” button.

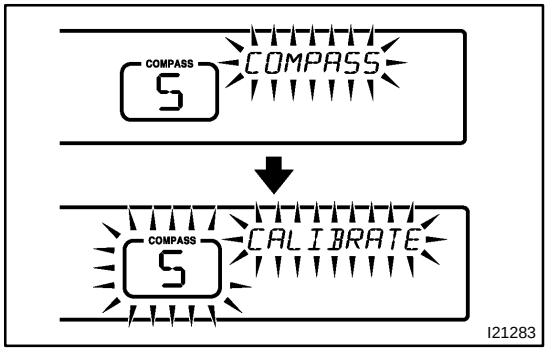

2. PERFORM CIRCLING CALIBRATION

(a) Push the ”MODE” button several times until ”COMPASS”appears and blinks on the calendar display.

(b) Then push the ”RESET/ADJ” button. ”CALIBRATE” appears and blinks together with the compass display.

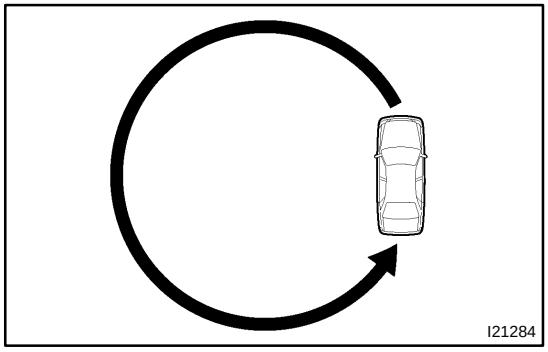

(c) Drive the vehicle in a circle until the blinking stops.

(d) If there is not enough space to drive in a circle, drive around the block until the blinking stops.

(e) When the compass and the calendar display return to normal mode, calibration is complete

NOTICE:

- **Do not perform circling calibration of the compass in a place where the earth's magnetic field is subject to interference by artificial magnetic fields (underground parking, under a steel tower, between buildings, roof parking, near a crossing, near a large vehicle, etc.).**
- **During calibration, do not operate electric systems (moonroof, power windows, etc.) as they may interfere with the calibration.**
- **If you want to cancel the calibration before it is complete, push the "MODE" button again.**

HINT:

A compass could be magnetized during by vessels of freight cars. Before delivery, therefore, make sure to perform calibration and ensure that calibration can be done. If cannot be done (cannot complete in spite of driving round several times), it may be caused by magnetization. Demagnetize the vehicle using a demagnetizer and preform calibration again.

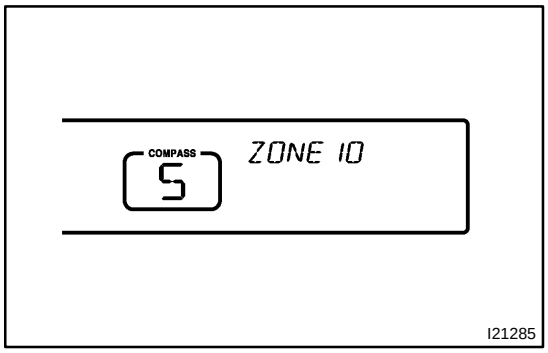

3. PERFORM DEVIATION CALIBRATION

(a) Stop the vehicle and push the "MODE" button several times until "ZONE XX" appears on the calender display.

(b) Then push the "RESET/ADJ" button, referring to the following map to select the number of the zone where the vehicle is.

(c) After calibration, push the "MODE" button several times until the calendar display returns to the normal mode.

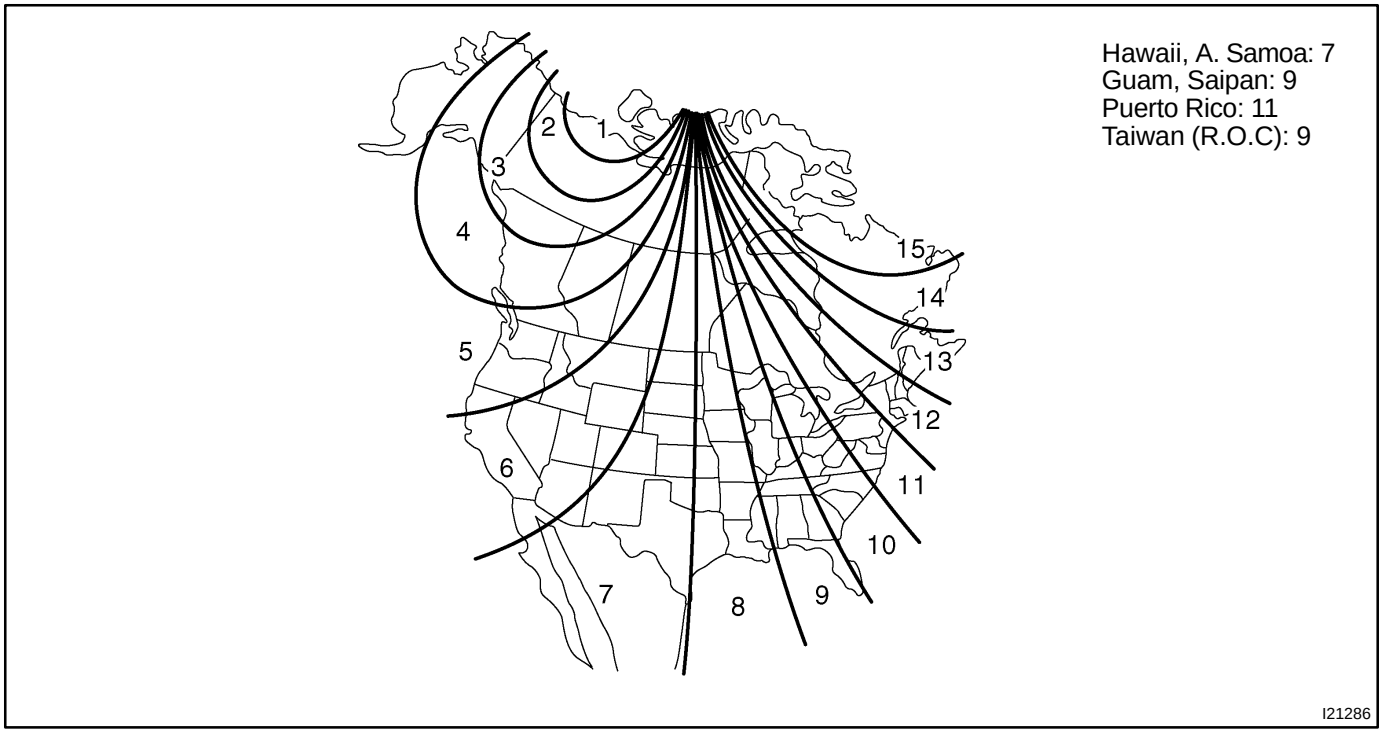

BE0IG-03

INSPECTION

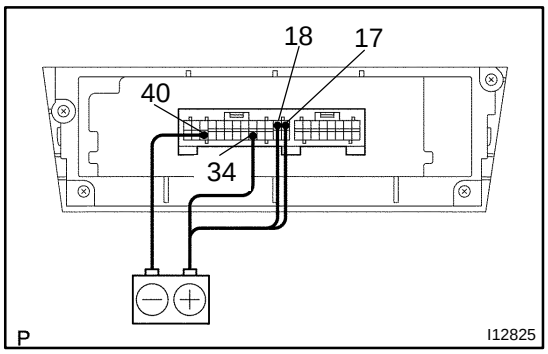

1. A/C control panel assembly:
INSPECT DEFOGGER SWITCH OPERATION

(a) Connect the positive (+) lead from the battery to terminal 17, 18 and negative (-) lead to terminal 40.

(b) Connect the positive (+) lead from the battery to terminal 24 through a 1.4 W test bulb.

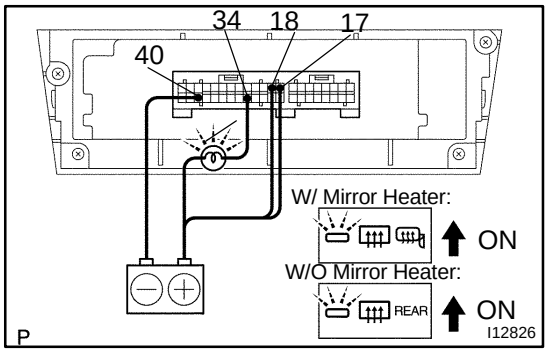

(c) Turn the defogger switch ON and check that the test bulb and indicator light turn ON, then turn OFF after about 15 minutes.

If operation is not as specified, proceed to the next inspection.

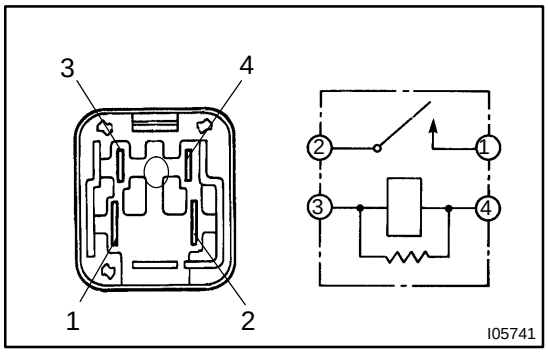

2. INSPECT DEFOGGER RELAY CONTINUITY

Condition	Tester connection	Specified condition
Constant	3 - 4	Continuity
Apply B+ between terminals 3 and 4.	1 - 2	Continuity

If continuity is not as specified, replace the relay.

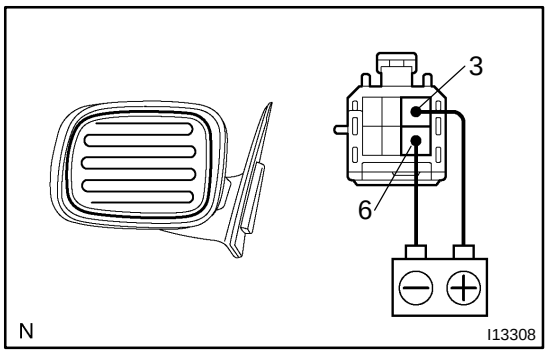

3. W/ Mirror defogger:
INSPECT MIRROR DEFOGGER OPERATION

(a) Connect the positive (+) lead from the battery to terminal 3 and the negative (-) lead to terminal 6.

(b) Check that the mirror becomes warm.

HINT:

It will take a short time for the mirror to become warm.

If the mirror does not become warm, replace the mirror assembly.

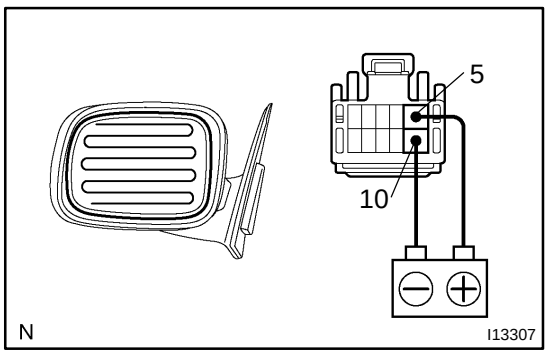

4. W/ Mirror defogger and driving position memory:
INSPECT MIRROR DEFOGGER OPERATION

(a) Connect the positive (+) lead from the battery to terminal 5 and the negative (-) lead to terminal 10.

(b) Check that the mirror becomes warm.

HINT:

It will take a short time for the mirror to become warm.

If the mirror does not become warm, replace the mirror assembly.

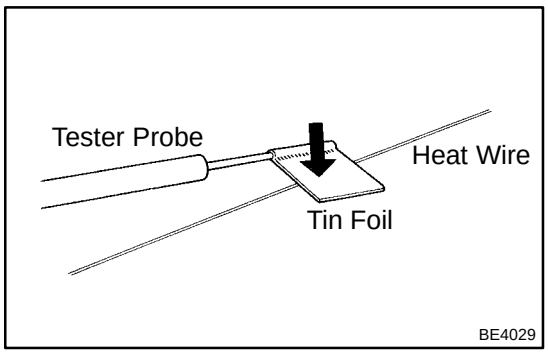

5. INSPECT DEFOGGER WIRE

NOTICE:

When cleaning the glass, use a soft, dry cloth, and wipe the glass in the direction of the wire. Take care not to damage the wires. Do not use detergents or glass cleaners with abrasive ingredients. When measuring voltage, wind a piece of tin foil around the top of the negative probe and press the foil against the wire with your finger, as shown.

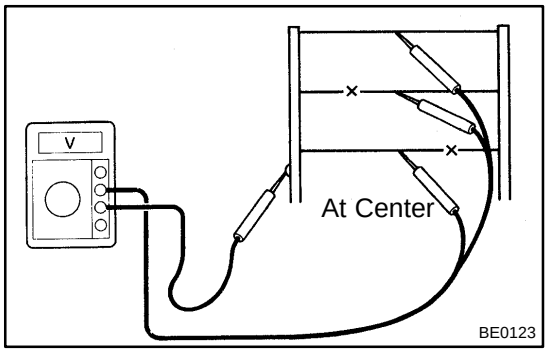

(a) Turn the ignition switch ON.
(b) Turn the defogger switch ON.
(c) Inspect the voltage at the center of each heat wire, as shown.

Voltage	Criteria
Approx. 5 V	Okay (No break in wire)
Approx. 10 V or 0 V	Broken wire

HINT:

If there is approximately 10 V, the wire is broken between the center of the wire and the positive (+) end. If there is no voltage, the wire is broken between the center of the wire and ground.

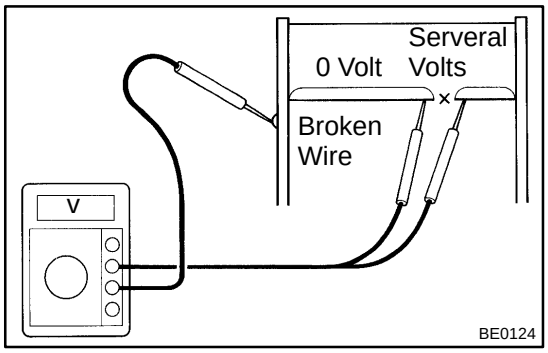

(d) Place the voltmeter positive (+) lead against the defogger positive (+) terminal.
(e) Place the voltmeter negative (-) lead with the foil strip against the heat wire at the positive (+) terminal end and slide it toward the negative (-) terminal end.
(f) The point where the voltmeter deflects from zero to several V is the place where the heat wire is broken.

HINT:

If the heat wire is not broken, the voltmeter indicates 0 V at the positive (+) end of the heat wire but gradually increases to about 12 V as the meter probe is moved to the other end.

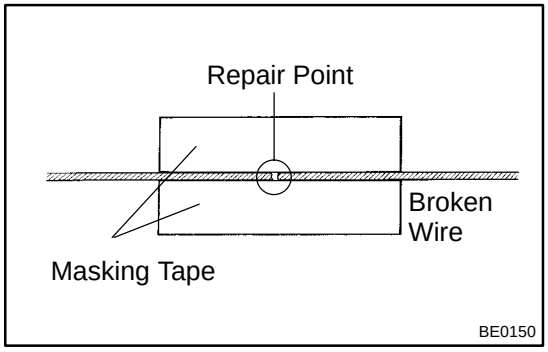

6. IF NECESSARY, REPAIR DEFOGGER WIRE

(a) Clean the broken wire tips with a grease, wax and silicone remover.
(b) Place the masking tape along both sides of the wire to be repaired.
(c) Thoroughly mix the repair agent (Dupont paste No. 4817).

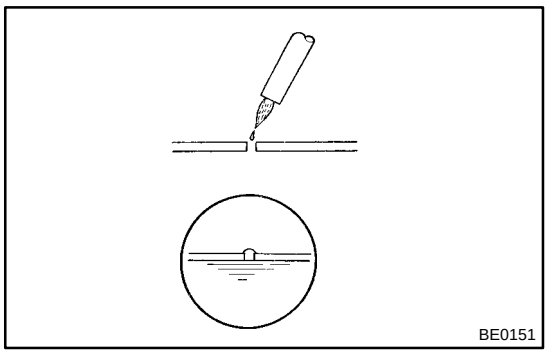

(d) Using a fine tip brush, apply a small amount to the wire.
(e) After a few minutes, remove the masking tape.
(f) Do not repair the defogger wire for at least 24 hours.

DEFOGGER SYSTEM

BE0IF-03

LOCATION

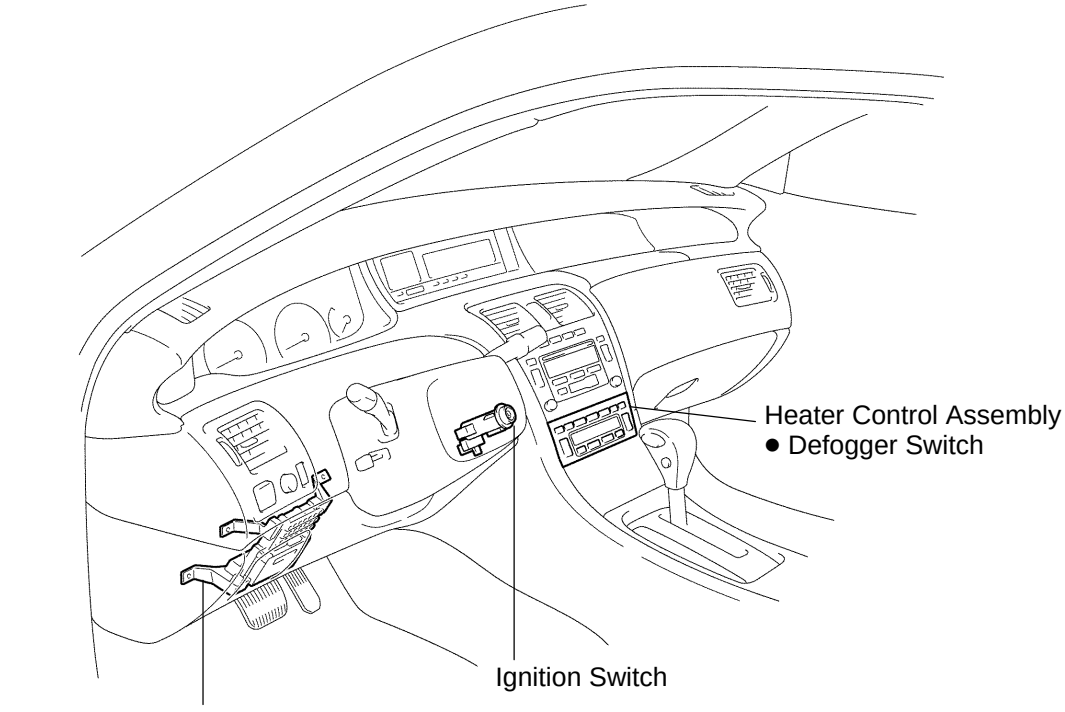

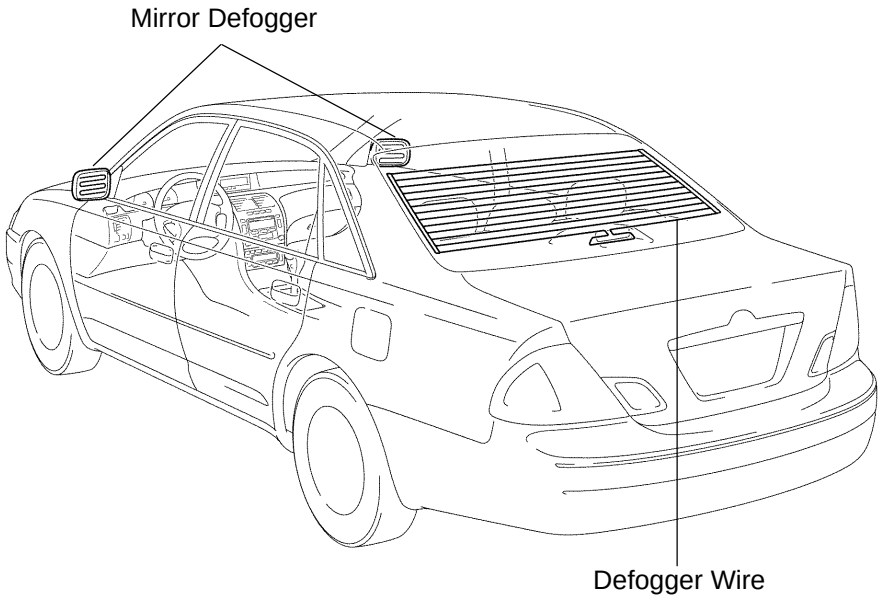

P

I12533

BE1ED-01

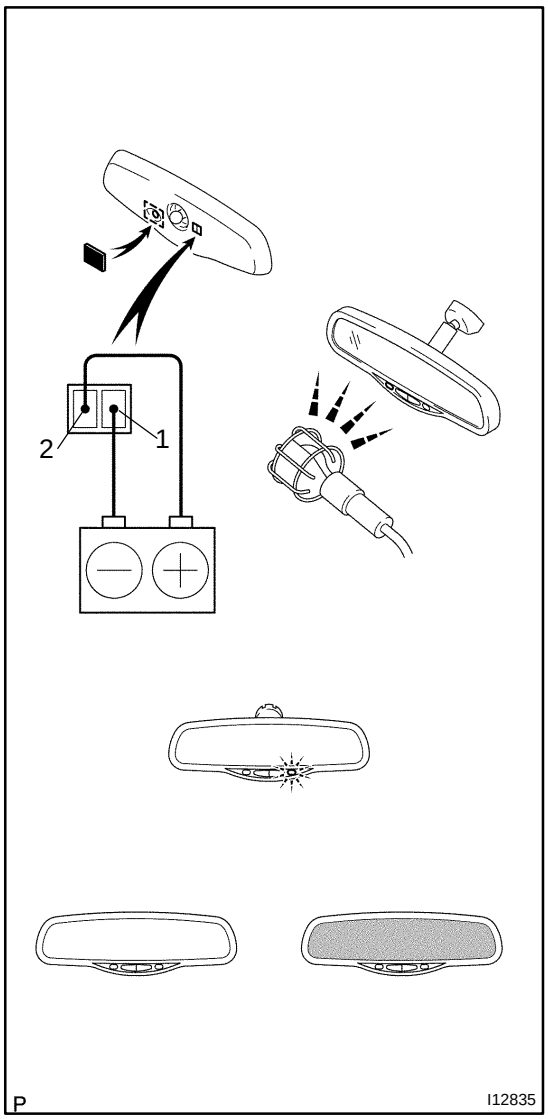

INSPECTION

INSPECT ELECTRO CHROMIC INNER MIRROR OPERATION

(a) Connect the positive (+) lead the battery to terminal 1 and the negative (-) lead to terminal2.

(b) Shine an electric light on the mirror, and check that there is battery positive voltage and mirror surface becomes ”bright” to ”dark”.

If operation is not as specified, replace the inner mirror.

BE1EE-01

ELECTRO CHROMIC MIRROR SYSTEM

LOCATION

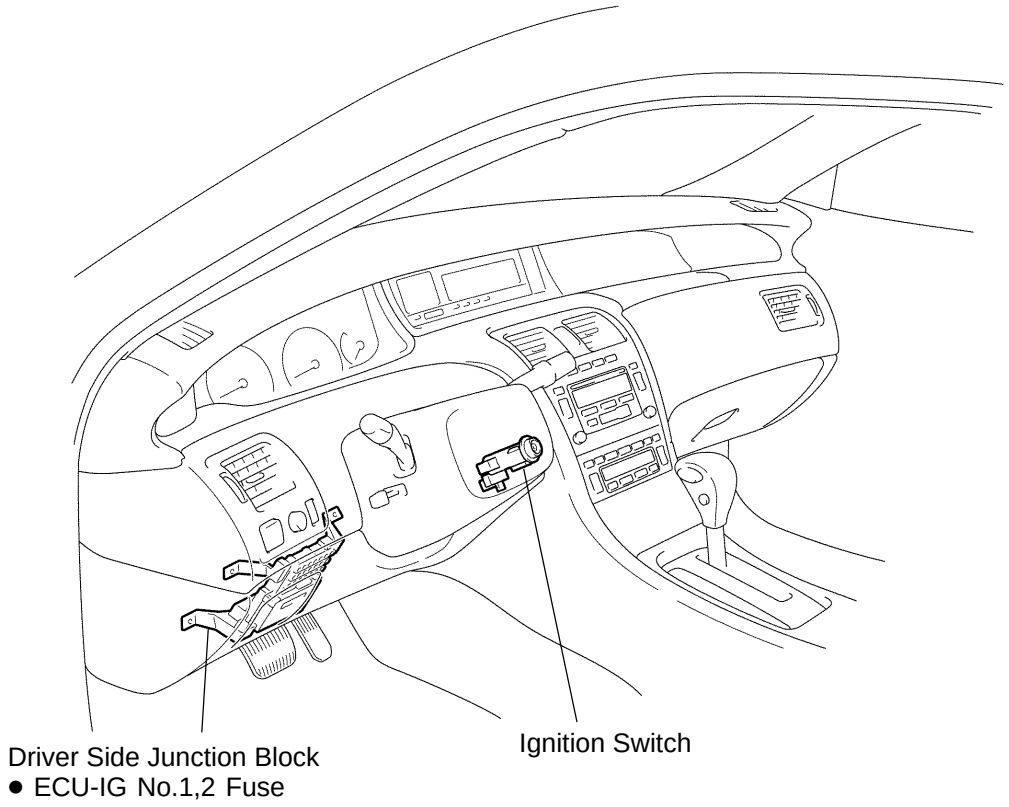

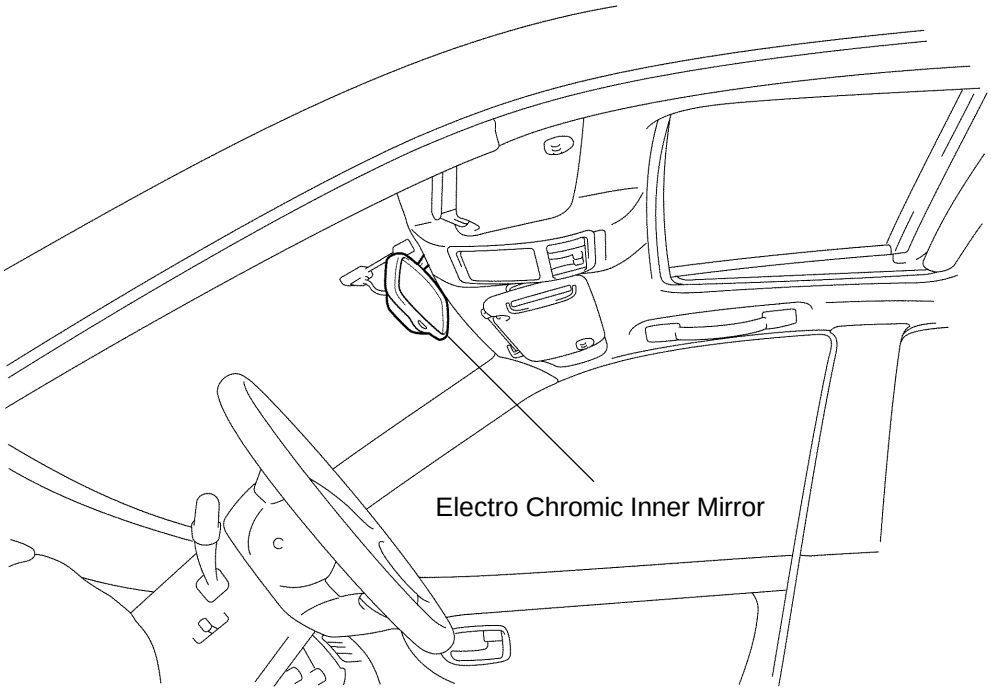

P

I12839

BE0B4-04

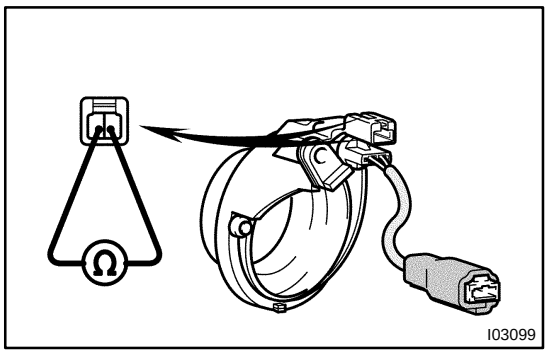

INSPECTION

INSPECTION TRANSPONDER KEY COIL CONTINUITY

Check that continuity exists between terminal 1 and 2.
If continuity is not as specified, replace the coil.

BE0B3-11

LOCATION

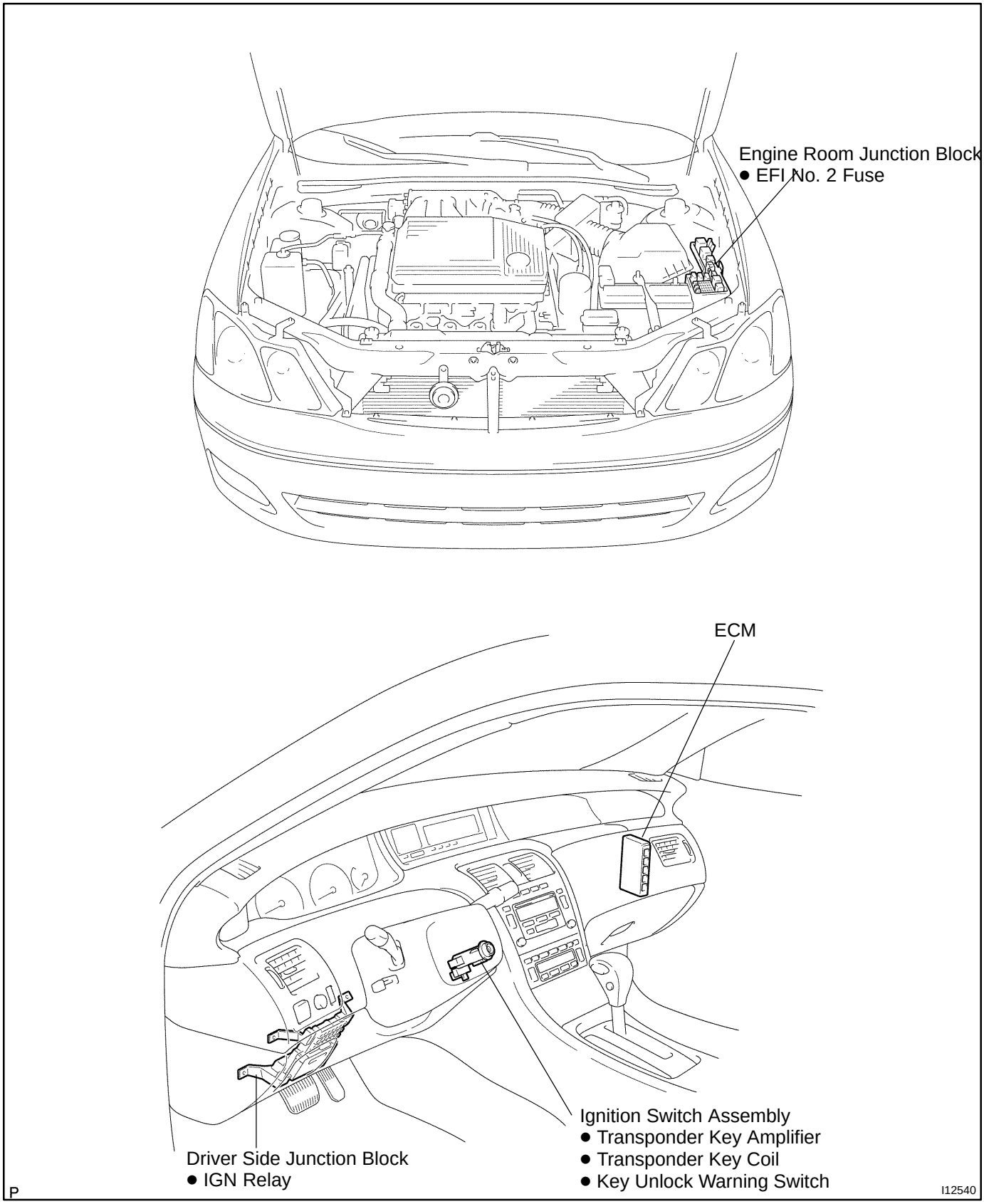

ENGINE IMMOBILISER SYSTEM

BE0B2-14

REGISTRATION PROCEDURE

1. KEY REGISTRATION IN AUTOMATIC REGISTRATION MODE

(a) Registration of a new transponder key.

HINT:

- This must be done when you have installed a new ECM.
- The new ECM is in the automatic key code registration mode. The already fixed number of key codes for this ECM can be registered.
  On this type of vehicle, up to 4 key codes can be registered.
- In the automatic registration mode, the last key registered becomes sub-key.

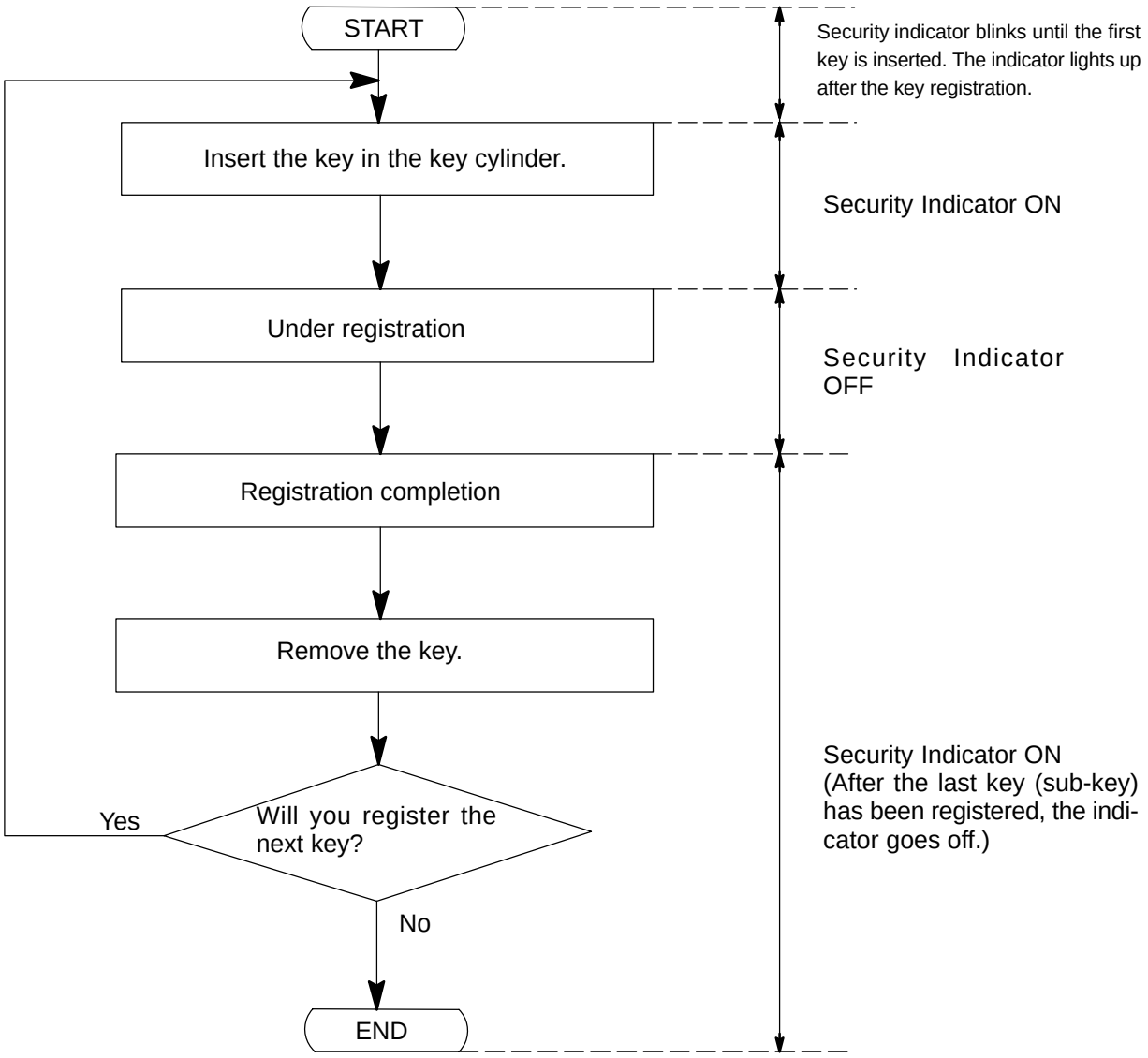

HINT:

- When a key is not inserted in the key cylinder in the automatic registration mode, the security indicator always lights on.
- When the immobiliser system operations normally and the key is pull out, the security indicator blinks.
- When key code registration could not be performed in the automatic registration mode, code 2-1 is output from the security indicator and when inserting the already registered key, code 2-2 is output.

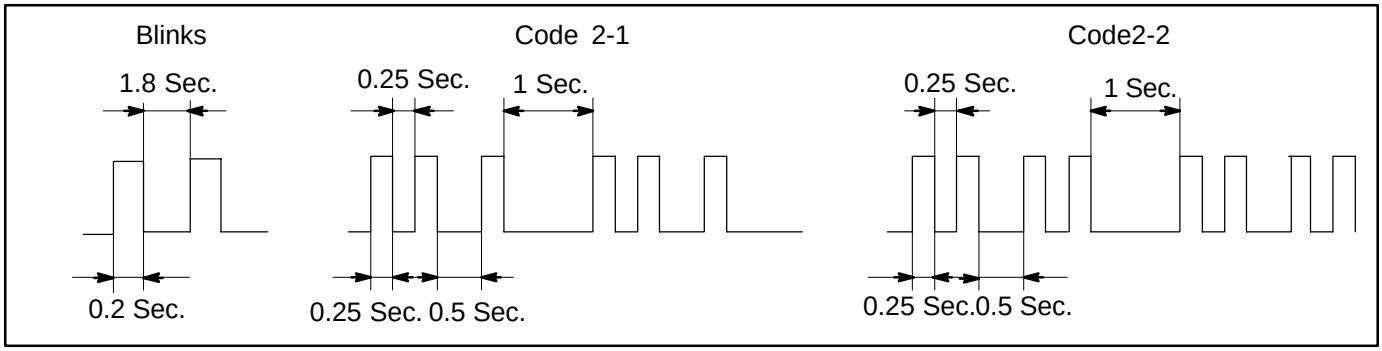

(b) Automatic registration mode completion

If completing the mode forcibly when more than 1 key code have been registered in the automatic registration mode, perform the following procedures.

After 1 more key code have been registered with master key, perform step (1) or (2) without pulling the key out or inserting the already registered key.

(1) Depress and release brake pedal 5 times or more within 15 secs.

(2) With the hand-held tester, require automatic registration mode completion.

2. REGISTRATION OF ADDITIONAL MASTER KEY

There are 2 ways for registration of additional master key, one is depressing brake pedal and acceleration pedal and the other is using hand-held tester.

HINT:

- It is possible to register up to 7 master key codes including the already registered key code.
- When any operation time described below is over, registration mode completes.
- When the next procedure is performed while the timer is working, the timer completes counting time, then next timer starts.

(1) Depressing brake pedal and acceleration pedal:

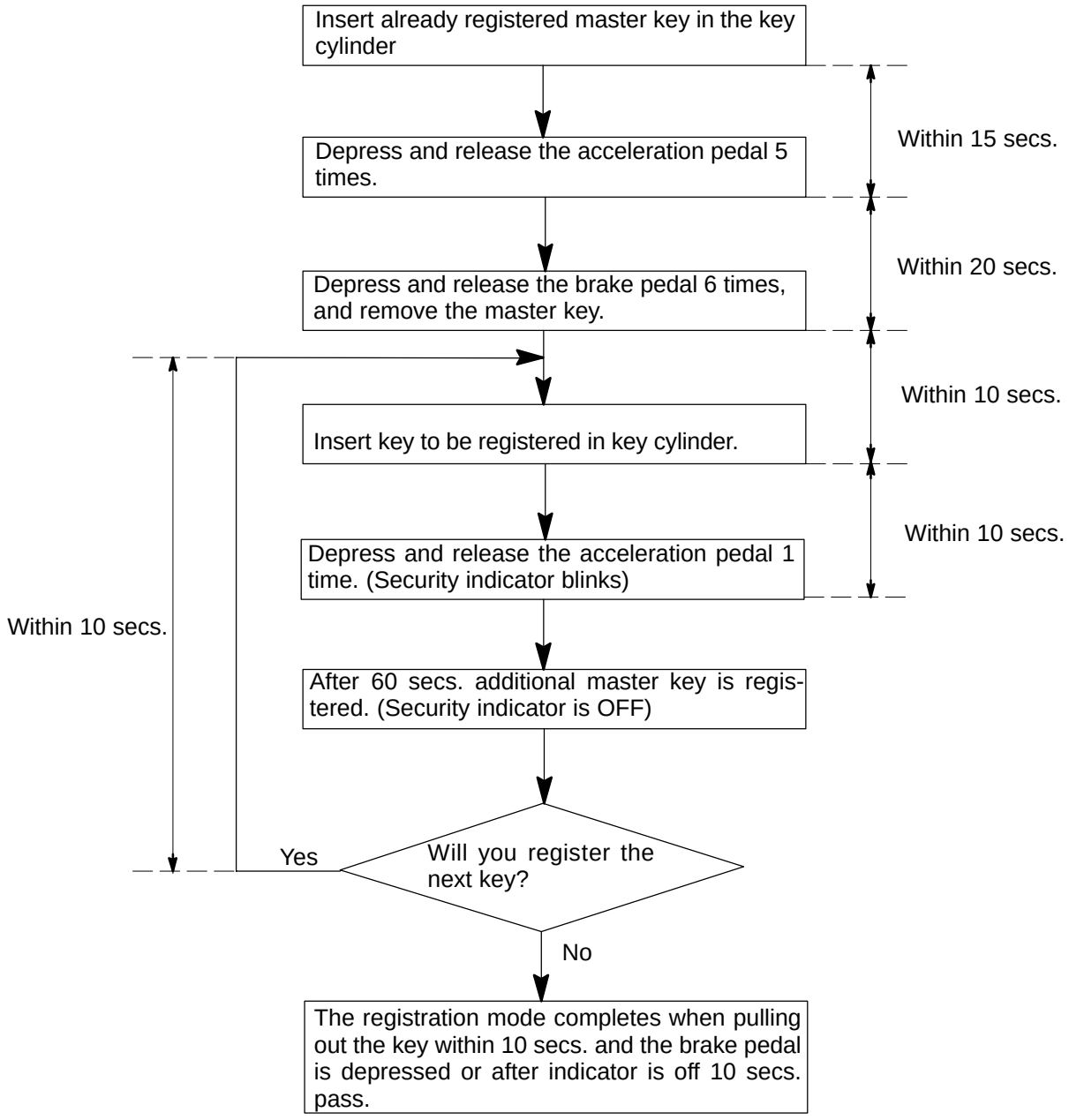

(2) Using hand-held tester:

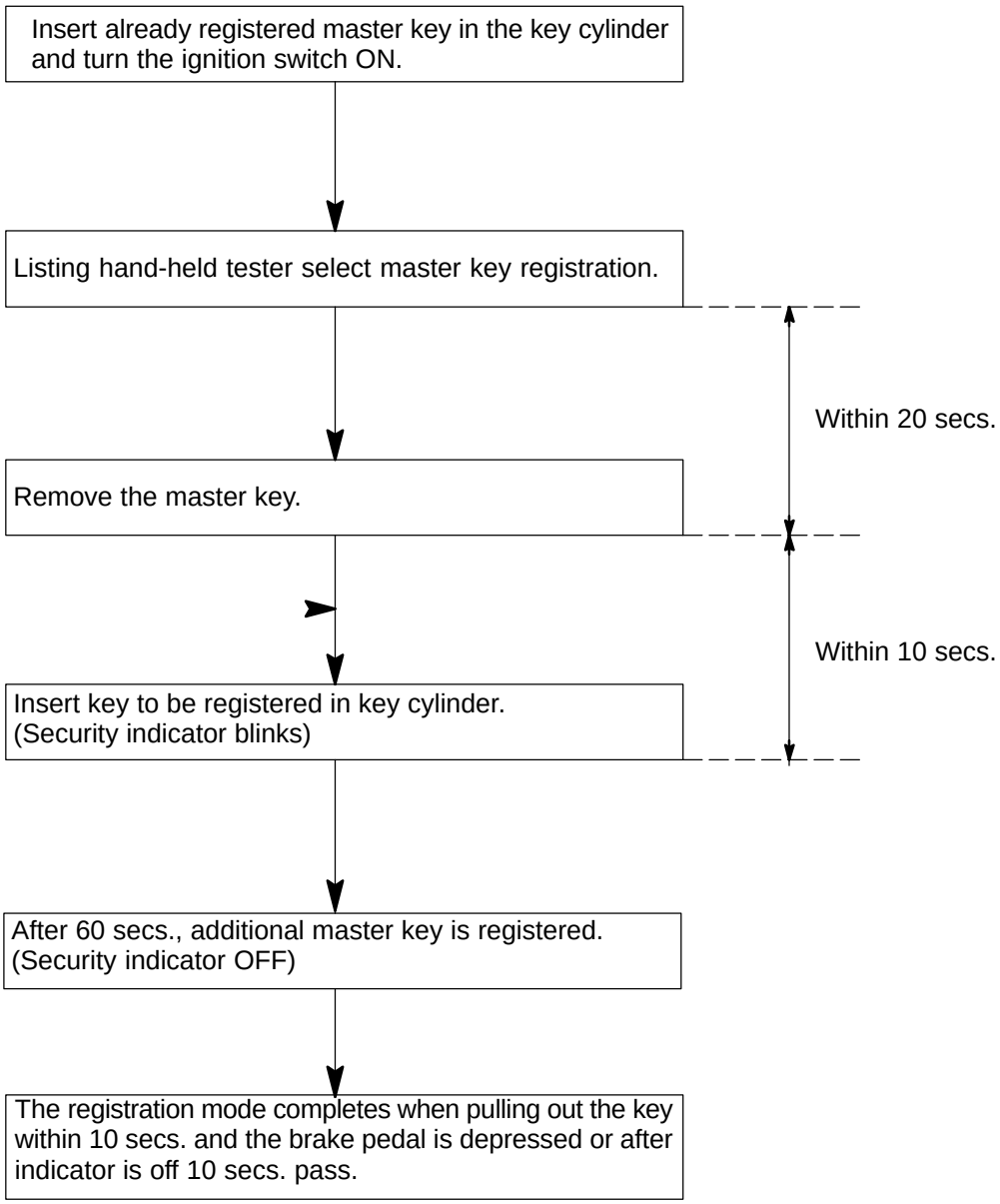

HINT:
Please follow the screen of the hand-held tester for more detailed procedure.

3. REGISTRATION OF ADDITIONAL SUB-KEY

There are 2 ways for registration of additional sub-key, one is depressing brake pedal and acceleration pedal and the other is using hand-held tester.

HINT:

- It is possible top register up to 3 sub-key codes including the already registered key code.
- When any operation time described below is over, registration mode completes.
- When the next procedure is performed while the timer is working, the timer completes counting time, then next timer starts.

(1) Depressing brake pedal and acceleration pedal:

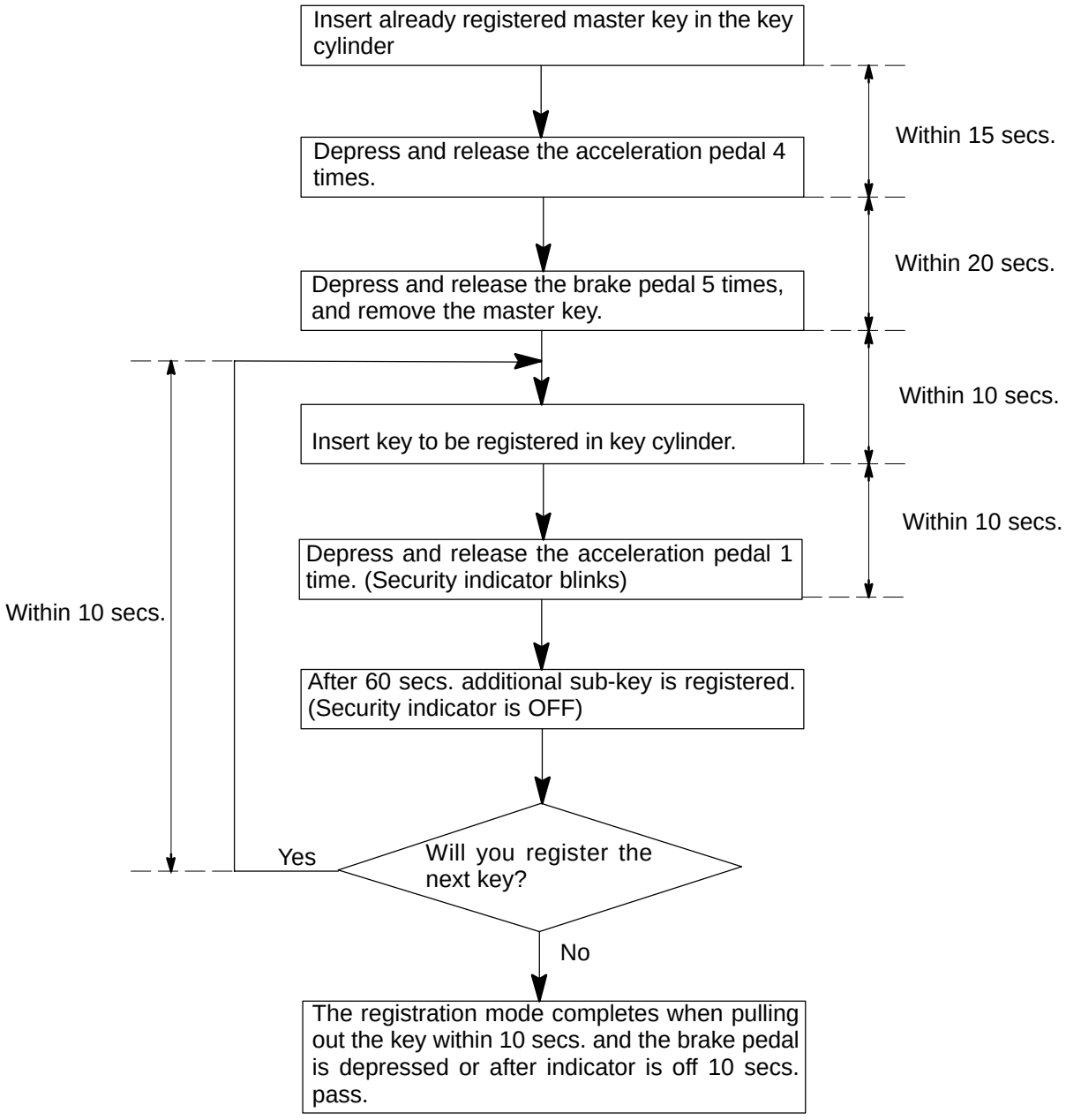

(2) Using hand-held tester:

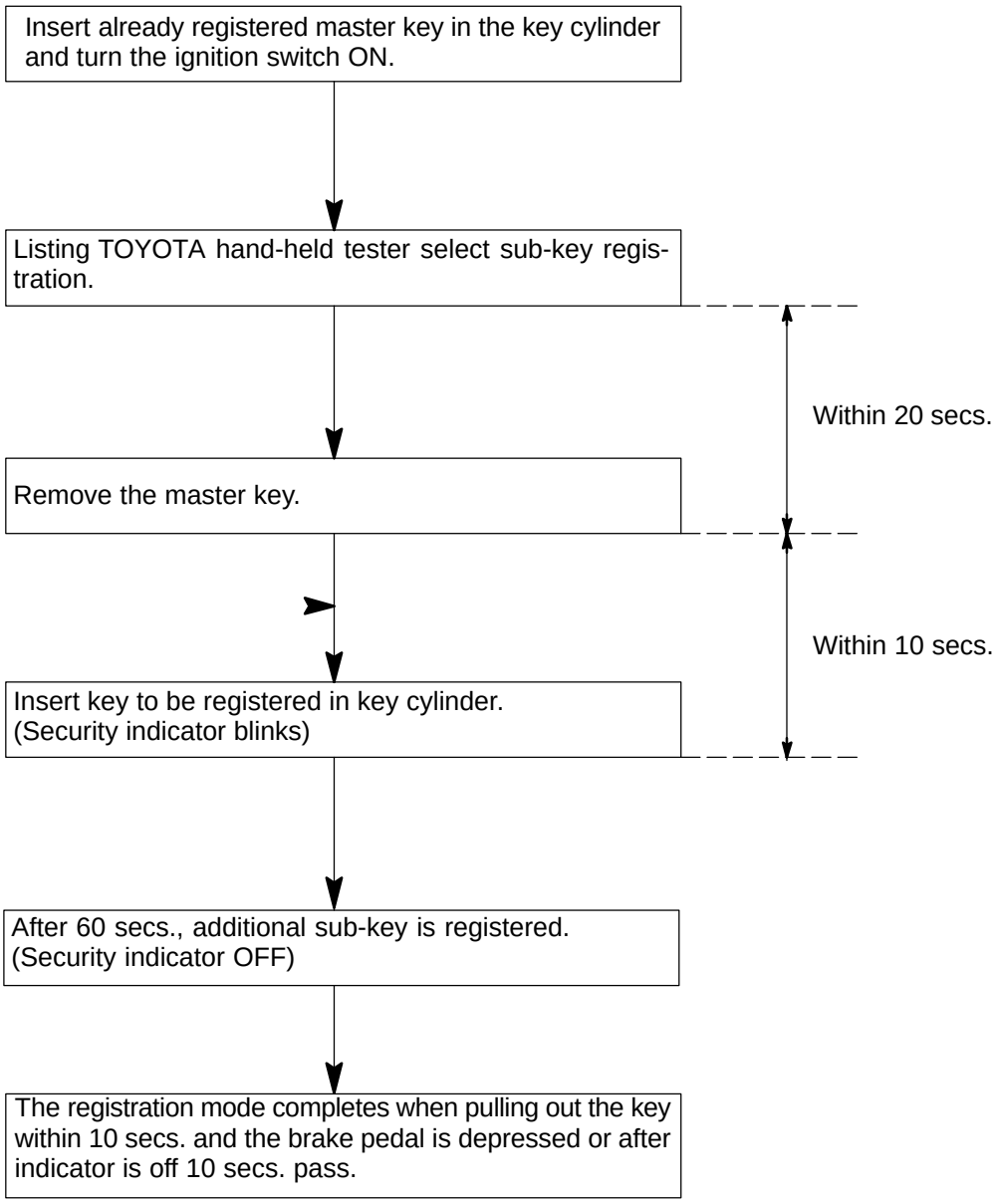

HINT:
Please follow the screen of the hand-held tester for more detailed procedure.

4. ERASURE OF TRANSPONDER KEY CODE

There are 2 ways for erasure of transponder key code, one is depressing brake pedal and acceleration pedal and the other is using hand-held tester.

NOTICE:

All other master and sub-key codes are deleted leaving the master key code to use the operation. When using the key which was used before deleting, it is necessary to register the code again.

HINT:

- When any operation time described below is over, registration mode completes.
- When the next procedure is performed while the timer is working, the timer completes counting time, then next timer starts.

(1) Depressing brake pedal and acceleration pedal:

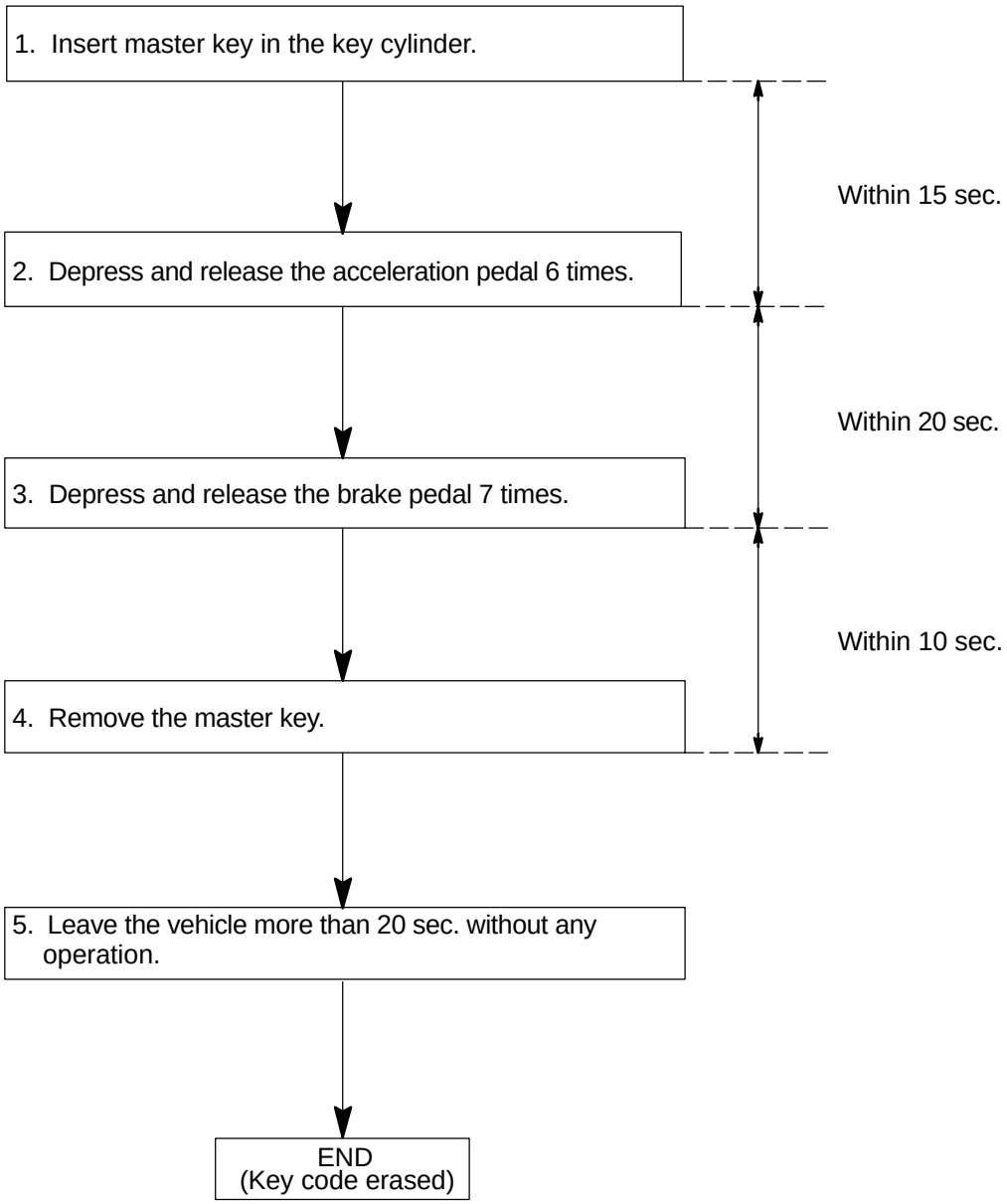

HINT:

If the key cannot be pulled out within 30 sec. from the first brake depression in the step 3, the key code deletion is canceled.

(2) Using hand-held tester:

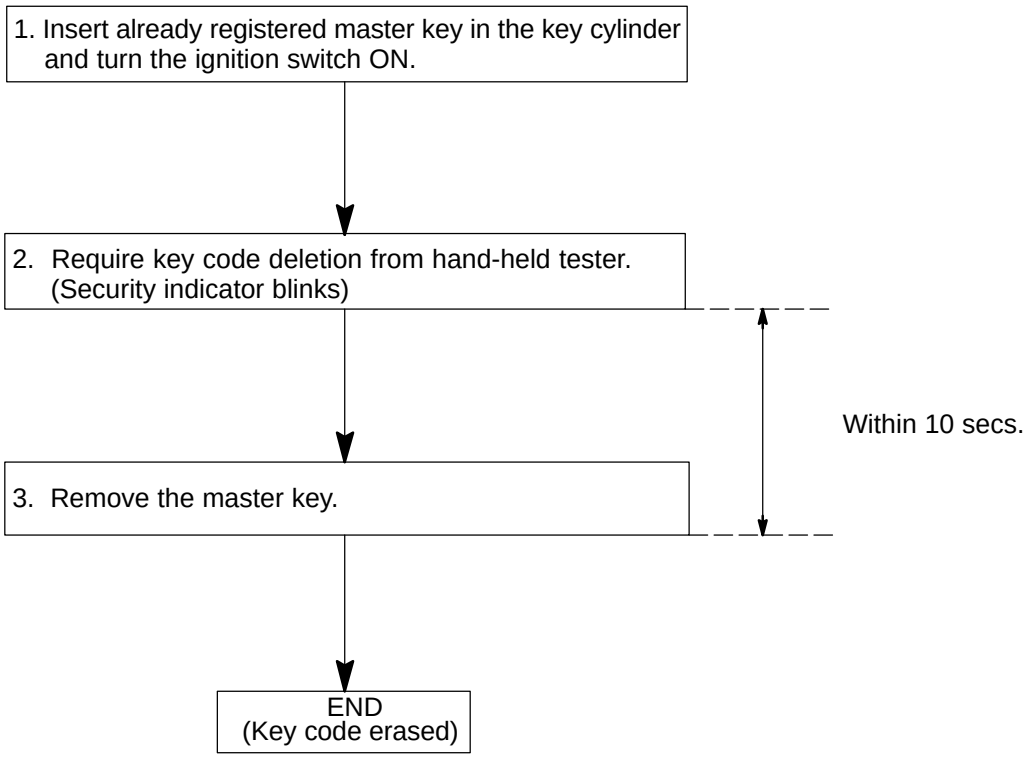

HINT:

- When the key cannot be pulled out in the step 3, key code deletion is canceled. (Security indicator is OFF)
- Please follow the screen of the hand-held tester for more detailed procedure.

BE052-07

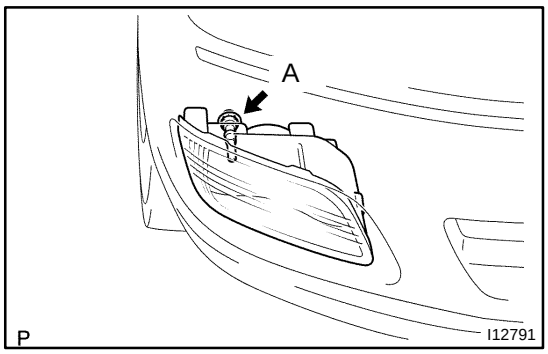

ADJUSTMENT

ADJUST FOG LIGHT AIM

A-bolt: Vertical Direction

BE0HZ-04

INSPECTION

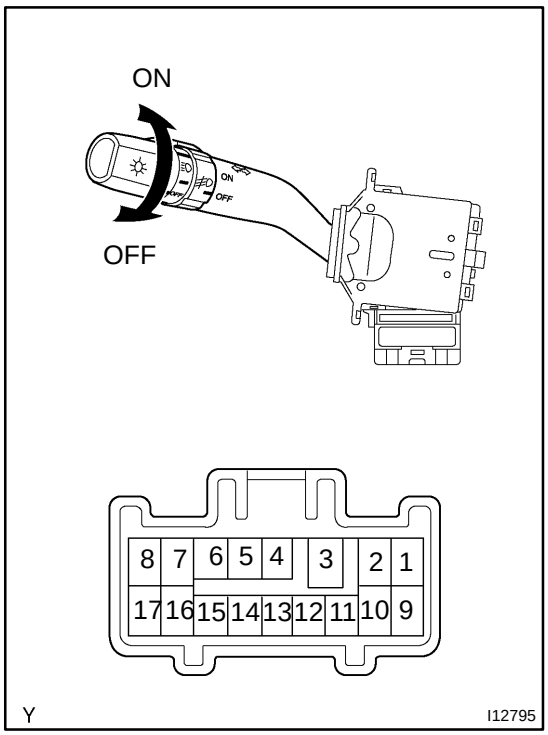

1. INSPECT FOG LIGHT SWITCH CONTINUITY

Switch position	Tester connection	Specified condition
OFF	-	No continuity
ON	10 - 11	Continuity

If continuity is not as specified, replace the switch.

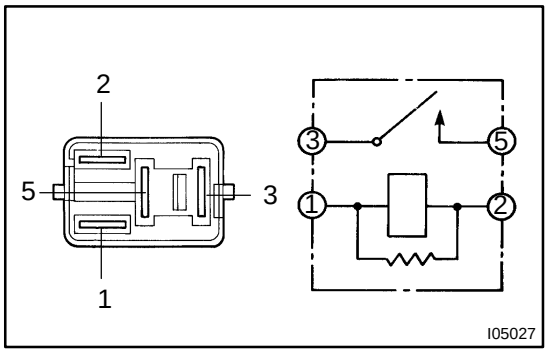

2. INSPECT FOG LIGHT RELAY CONTINUITY

Condition	Tester connection	Specified condition
Constant	1 - 2	Continuity
Apply B+ between terminals 1 and 2.	3 - 5	No continuity

If continuity is not as specified, replace the relay.

FOG LIGHT SYSTEM

LOCATION

BE050-07

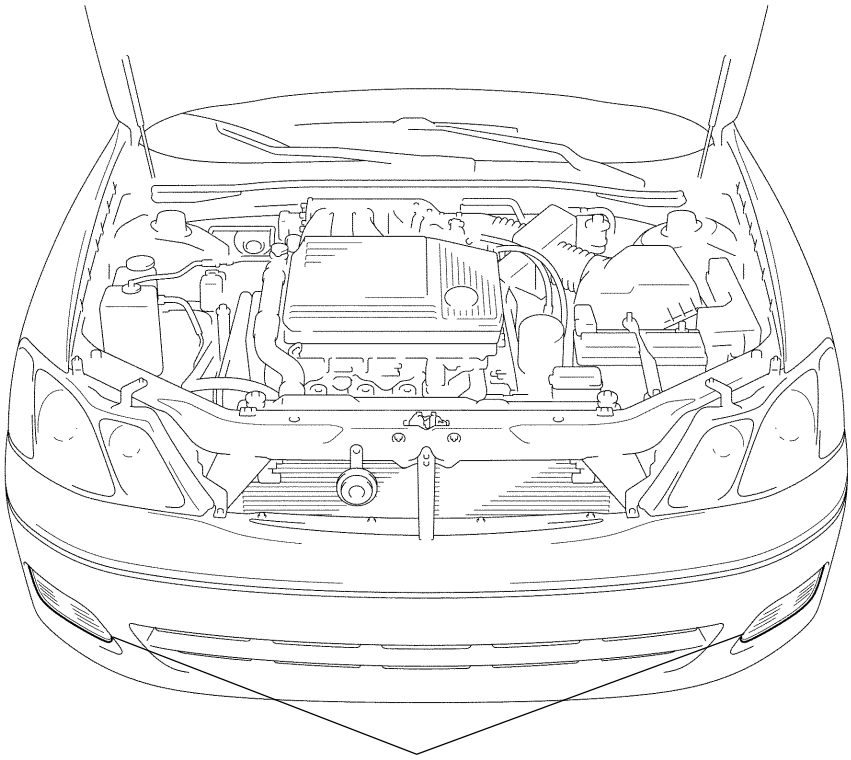

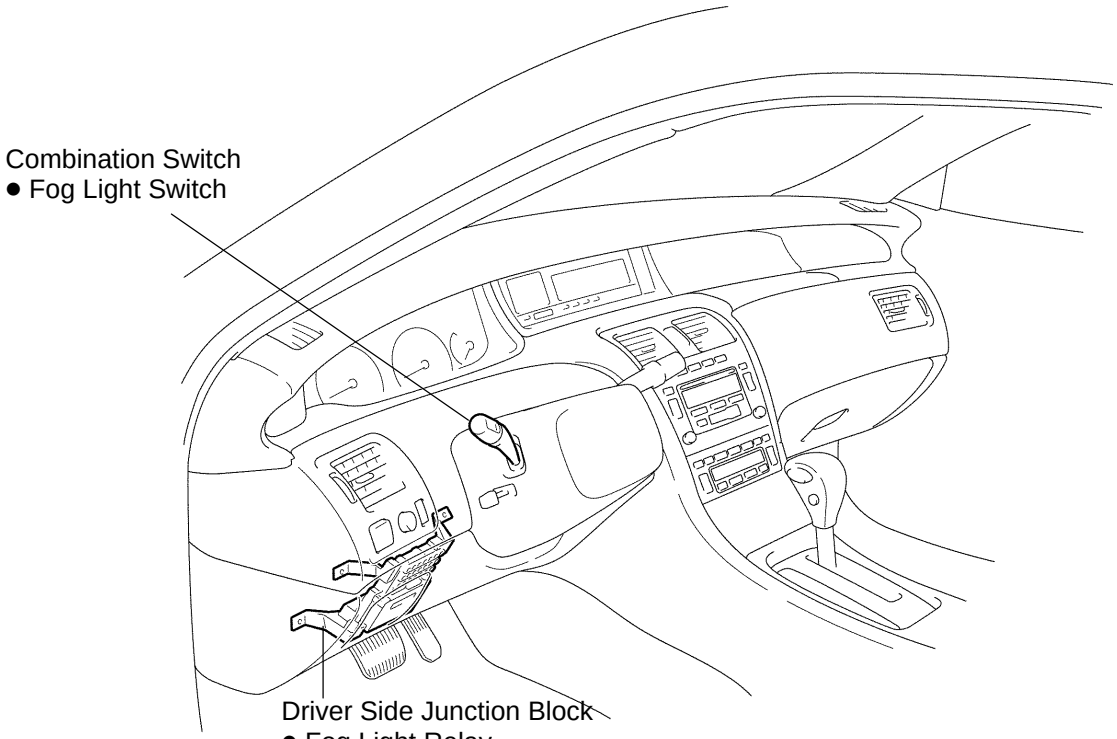

P

I12525

BE0G5-04

INSPECTION

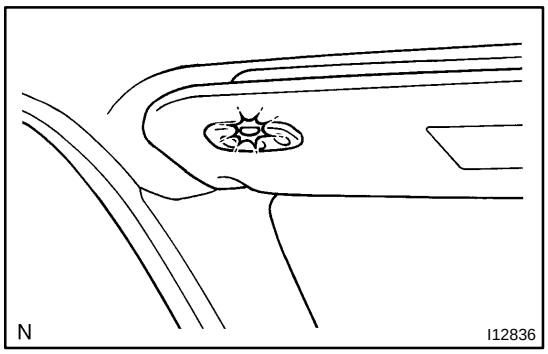

1. INSPECT GARAGE DOOR OPENER SWITCH

Press the switch and check that each LED (red) lights up.
Even if only one switch is found not to light up, replace it.

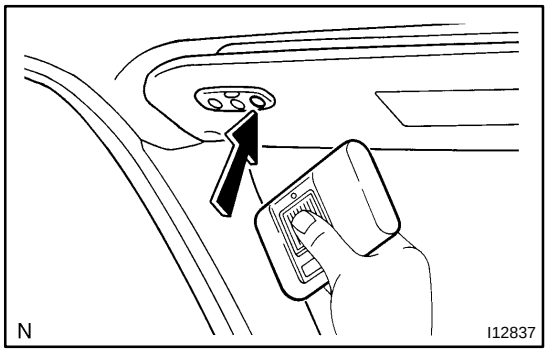

2. INSPECT GARAGE DOOR OPENER REGISTRATION AND TRANSMITTING

HINT:
Use the home link tester made by KENT MORE for this test.
As it is necessary to record the code of the hand held transmitter, customer's code will be erased. When the inspection completes, please register the customer's again.

(a) Check that the code of hand held transmitter for inspection can be recorded.
(See page

If the code can not be registered, replace garage door opener.

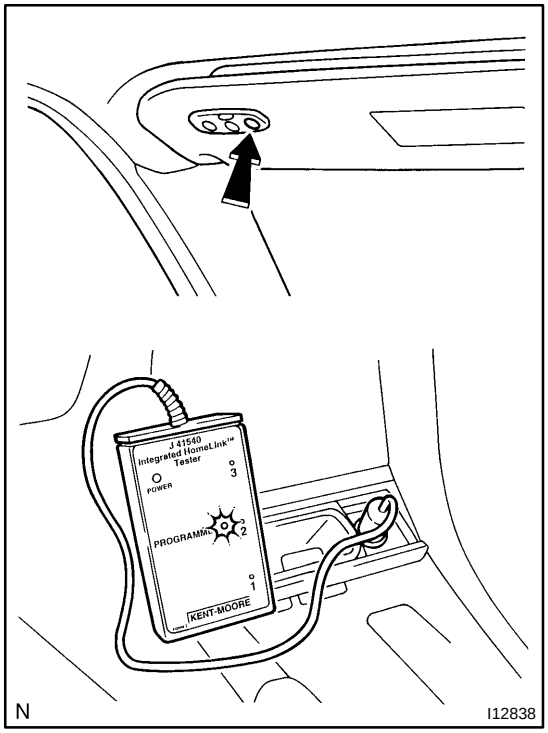

(b) Press the switch which an inspection code has been registered for and check that LED (green) of the home link tester lights up.

If the LED (green) does not light up, replace the garage door opener.

Wire Harness Side

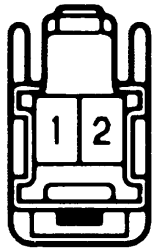

I04194

3. INSPECT GARAGE DOOR OPENER SWITCH CIRCUIT

Disconnect the connector from the switch and inspect the connector on the wire harness side, as shown.

Tester connection	Condition	Specified condition
1 - Ground	Constant	Continuity
2 - Ground	Constant	Battery positive voltage

If the circuit is not as specified, inspect the power source or wire harness.

BE0D3-03

LOCATION

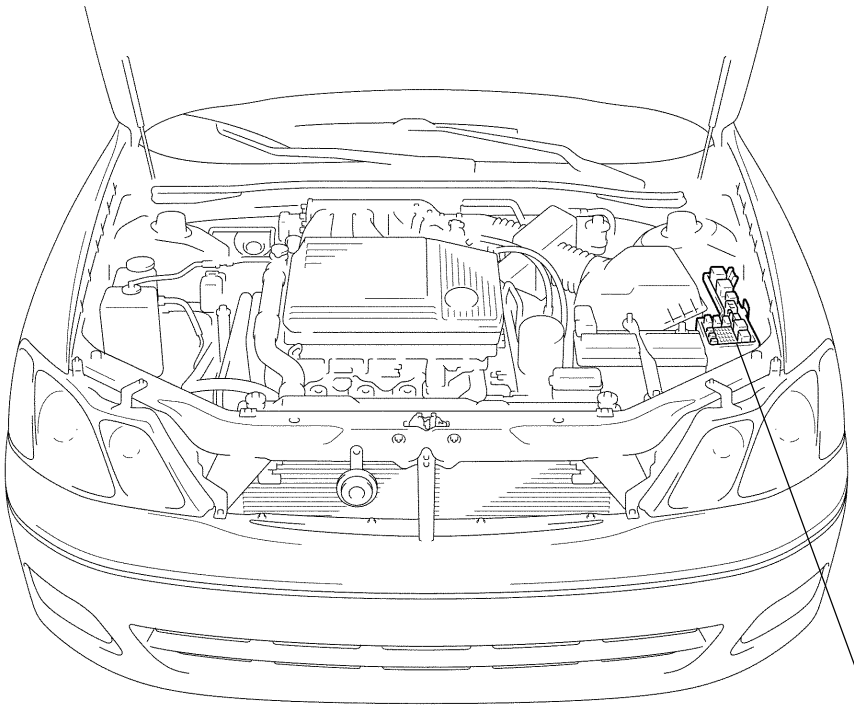

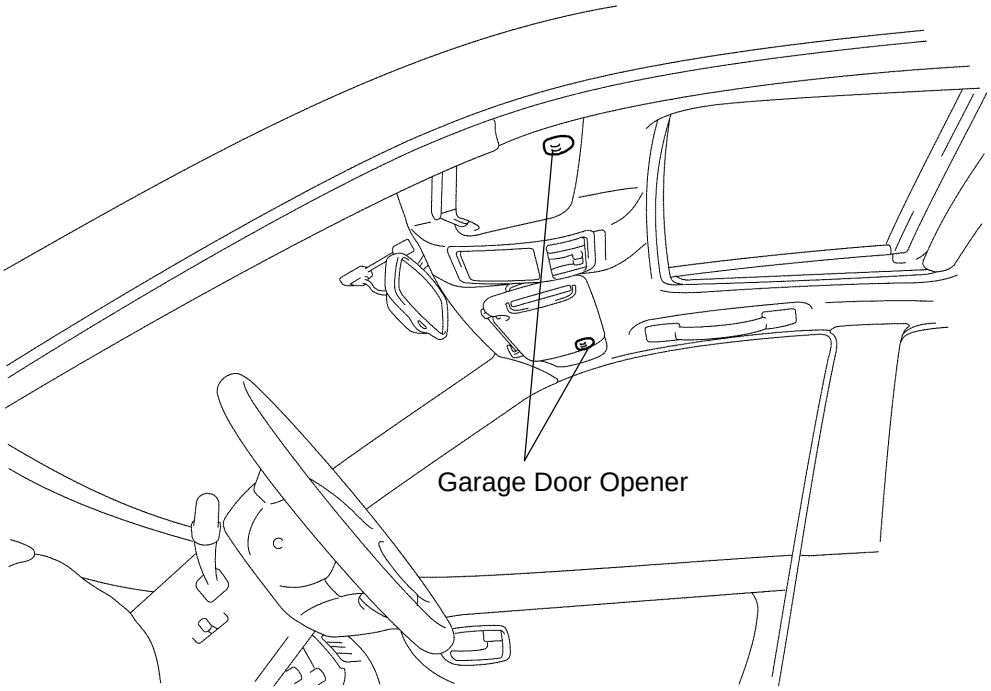

P

I12840

GARAGE DOOR OPENER SYSTEM

BE0D2-03

REGISTRATION PROCEDURE

1. NEW CODE REGISTRATION

NOTICE:

- **If pressing the switch of the original transmitter to register the code, the system might operate.**
- **When registering the transmitter codes such as for garage or gate, check that there is nobody around those places then register.**

(a) Press the switch for the item to be registered for 20 seconds

HINT:

When transferring to registration mode, LED (red) blinks in 1 Hz cycle.

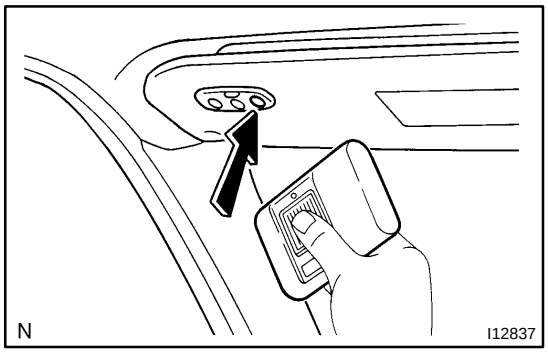

(b) In the condition of (a), bring the original transmitter to within 1-inch area around the garage door opener and press the switch. (code transmitting).

HINT:

When code registration completes correctly, LED (red) blinks in 5.6 Hz cycle.

New code registration timing chart.

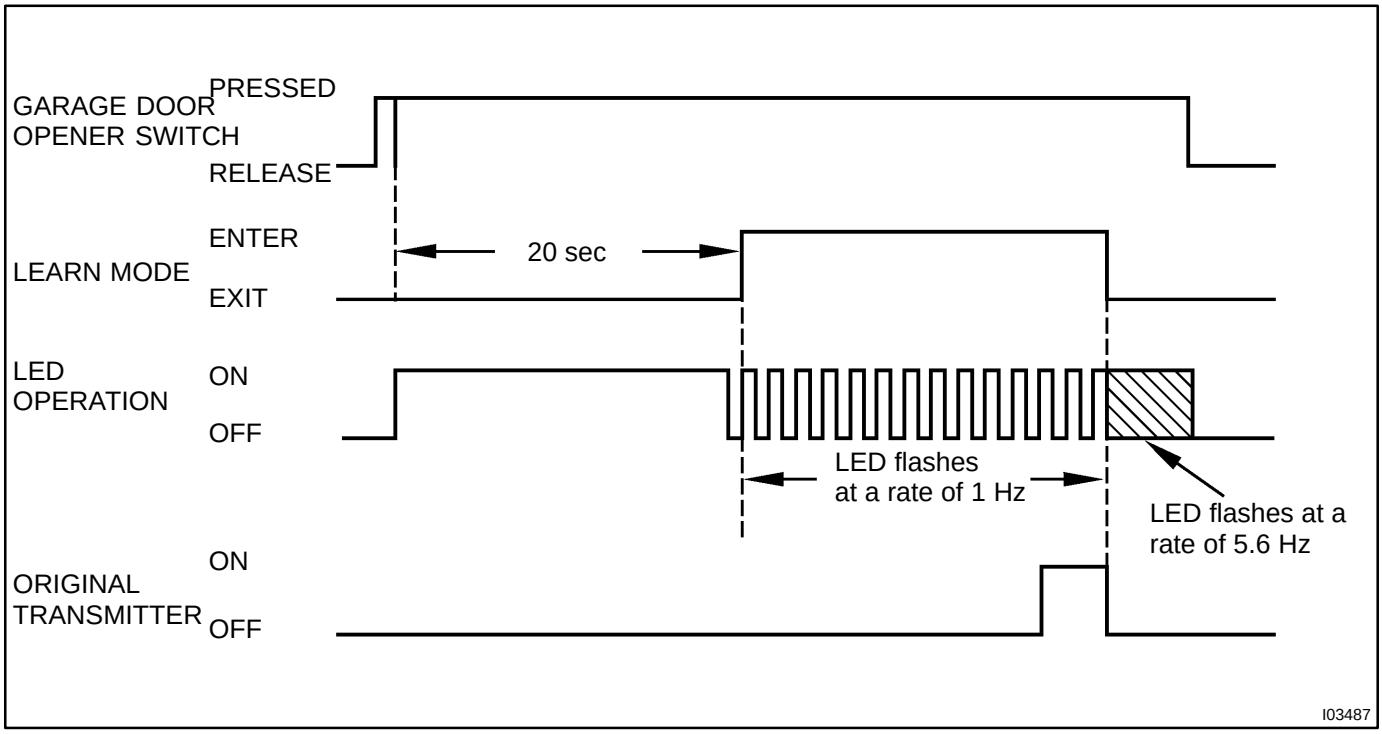

If a code can not be registered, observe the following conditions.

HINT:

- If the battery of original transmitter is consumed.
- Press the switch of the transmitter repeatedly in registration mode, as some transmitters stop transmitting for 1 to 2 seconds.
- This system is not applicable to the garage door opener which had been made before 1982.
- If any signal from the transmitter is not received, the registration mode continues for 75 sec.

2. CODE DELETION

(a) Press the switches at both ends of garage door opener simultaneously for 20 seconds.

HINT:

When transferring to deletion mode, LED (red) blinks in 6 Hz cycle.

(b) When releasing the switch within 10 seconds after transferring to deletion mode, all the registered codes will be erased.

HINT:

Press the switch until blinking in 5.6 Hz cycle stops, so that the default code for check is set.

Code deletion timing chart

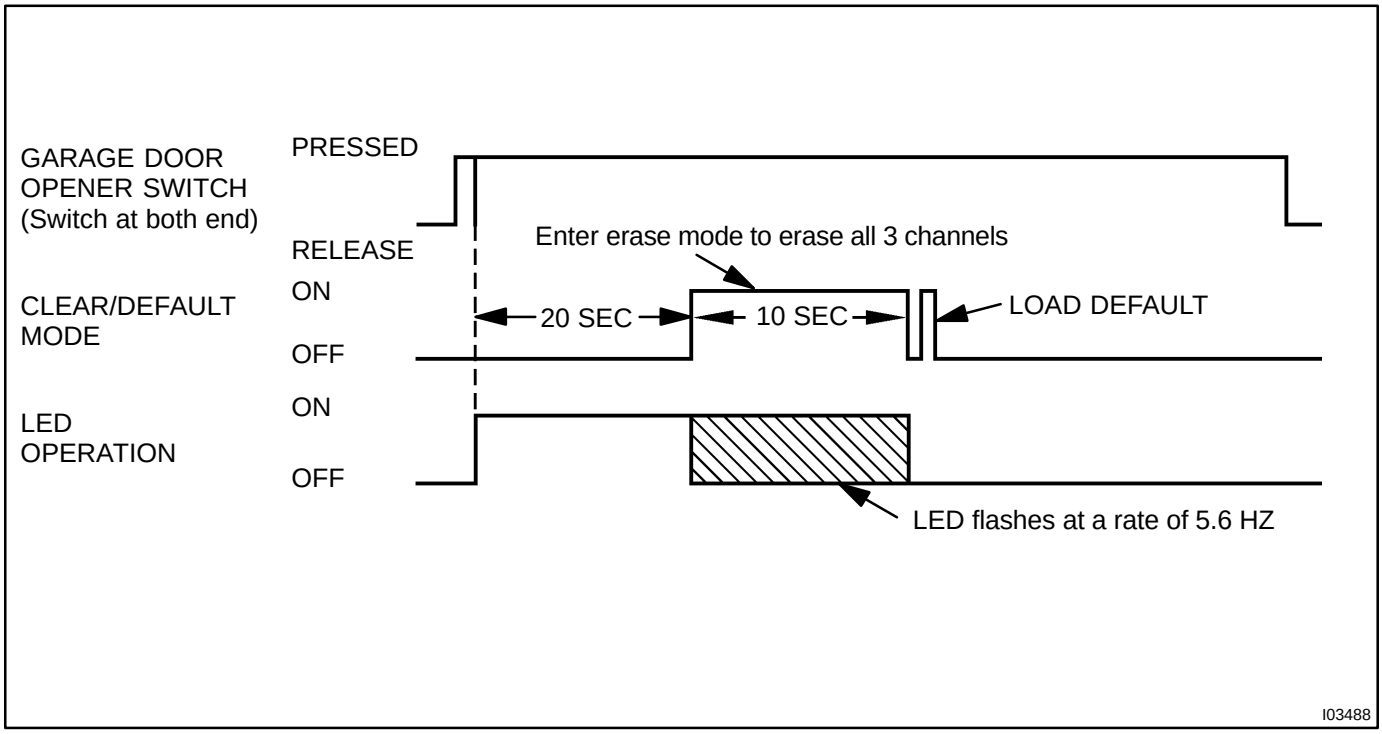

BE1DK-07

ADJUSTMENT

1. ADJUST HEADLIGHT AIMING

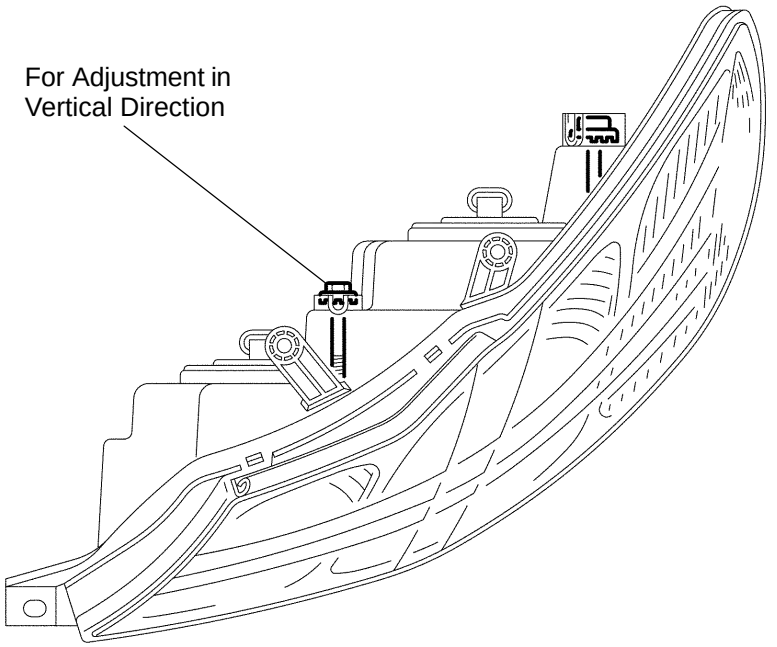

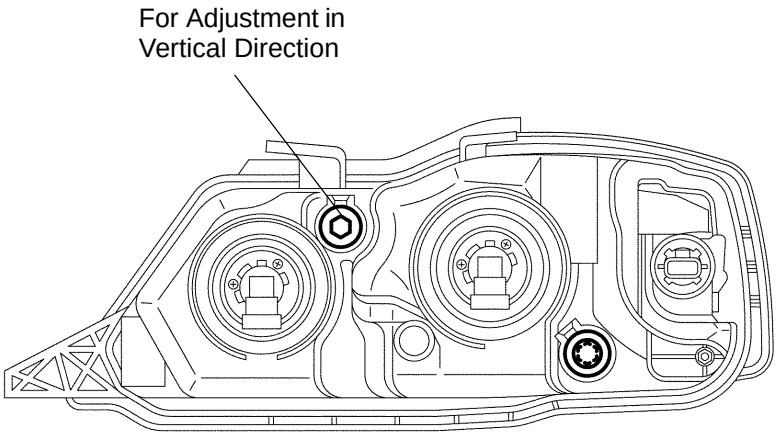

P

I12789

2. ADJUST HEADLIGHT AIM ONLY

(a) Place the vehicle in the following conditions.
- The area around the headlight is not deformed.
- The vehicle is parked on a level surface.
- Tire inflation pressure is the specified value.
- A driver is in the driver's seat and the vehicle is in a state ready for driving (with a tank full).
- The vehicle has been bounced several times.

(b) Check the headlight aiming.
(1) Prepare a thick white paper.
(2) Stand the paper perpendicular to the ground at the position 9.84 ft away from the headlights.
(3) Ensure that the center line of the vehicle and the paper face forms a 90-degree angle as shown in the illustration.
(4) Draw a horizontal line (H line) on the paper, showing where the headlights should strike.
(5) Draw a vertical line (V line) to where the center line of the vehicle is to be.
(6) Draw 2 vertical lines (by connecting the low and high beam center marks) to where the both headlights should strike (V RH and V LH lines).
(7) Draw a horizontal line (by connecting the both low beam center marks) to where the headlights should strike (H RH and H LH lines).

HINT:
The H RH and H LH line is 0.4° below the horizontal line (H line) of the light axis.

(8) Start the engine.
(9) Turn the headlights ON.
(10) Check that the headlights properly strike the position shown in the illustration.
(11) If not, adjust the lights in the vertical direction.

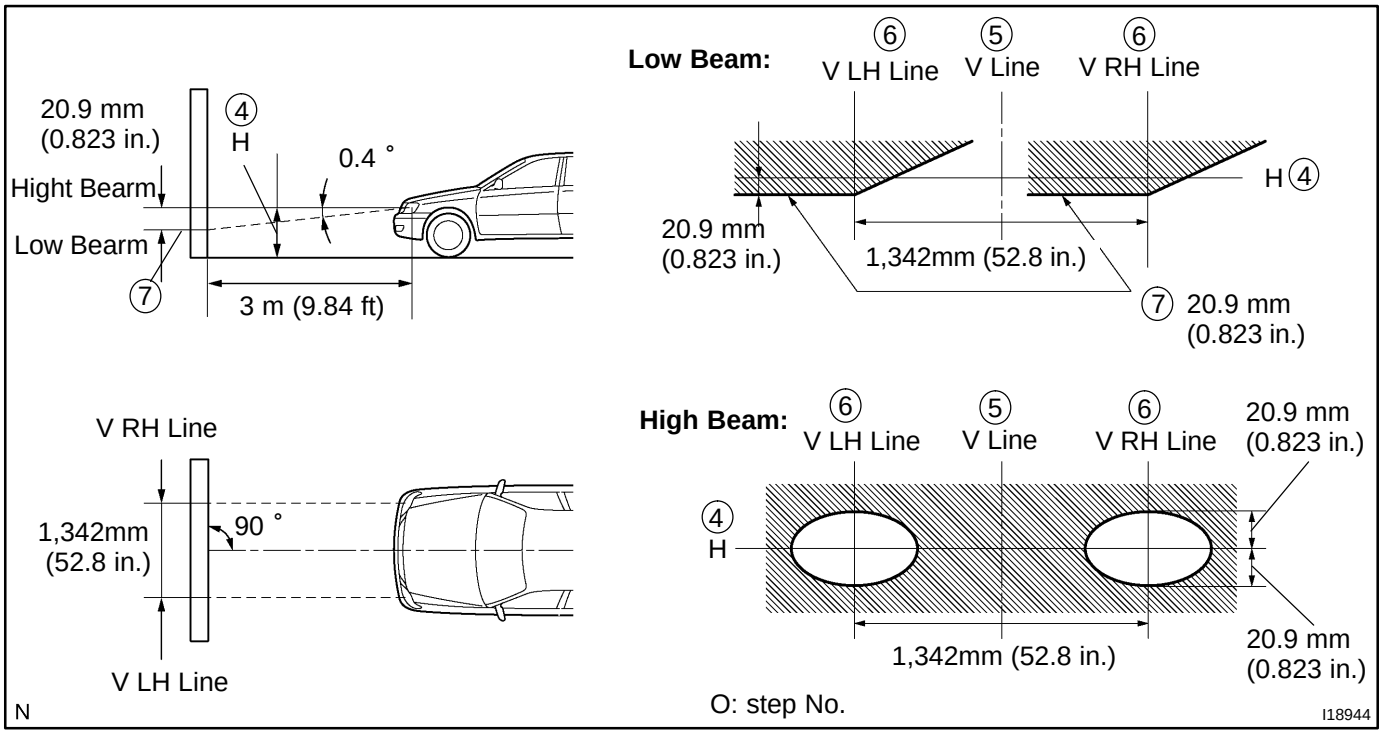

HINT:
As shown in the illustration, adjust each aim of the RH and LH lights.

(c) When adjusting it in the vertical direction:
Using adjusting bolt, adjust the headlight aim to within the specified range.

BE0HW-03

COMPONENTS

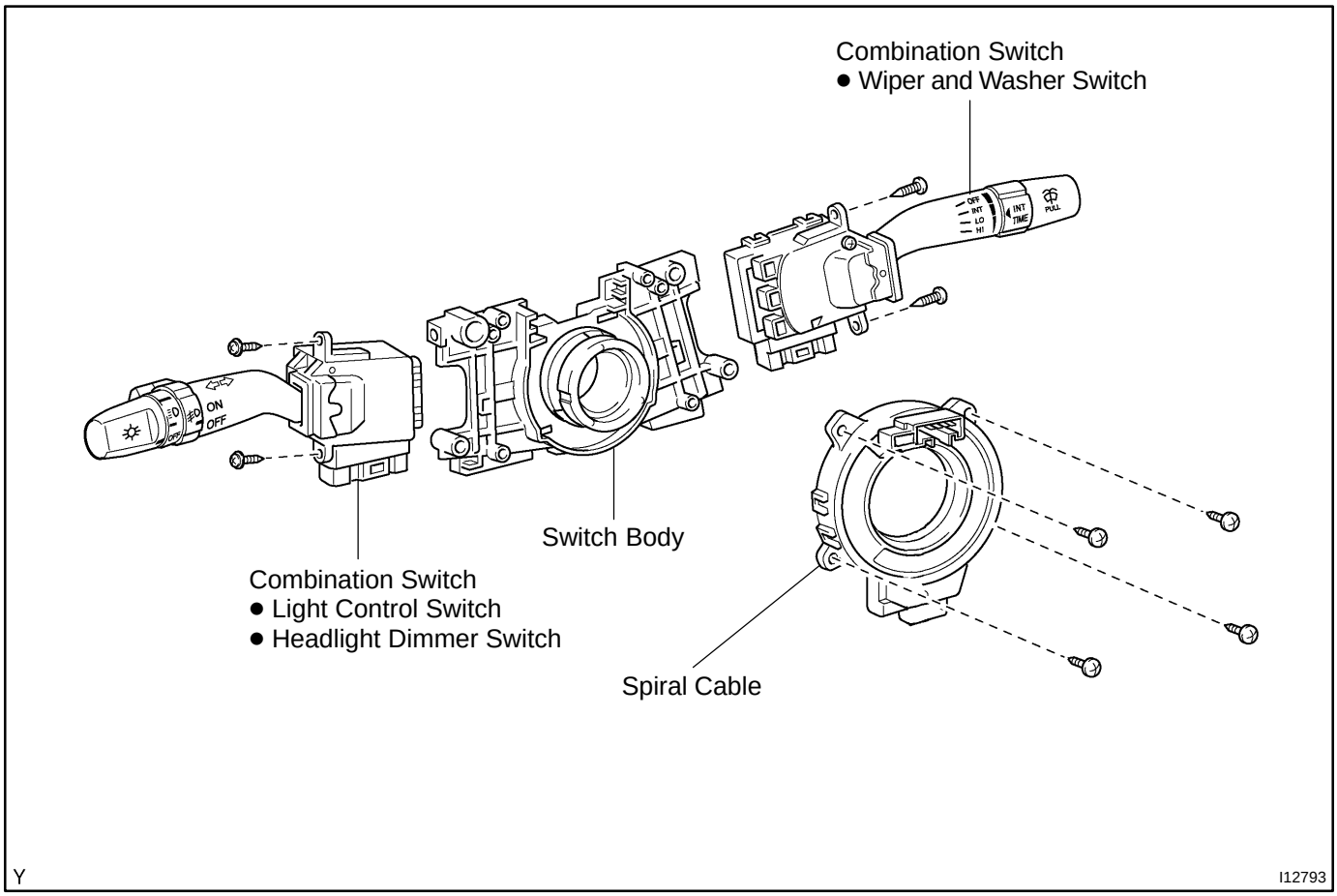

BE1DJ-01

INSPECTION

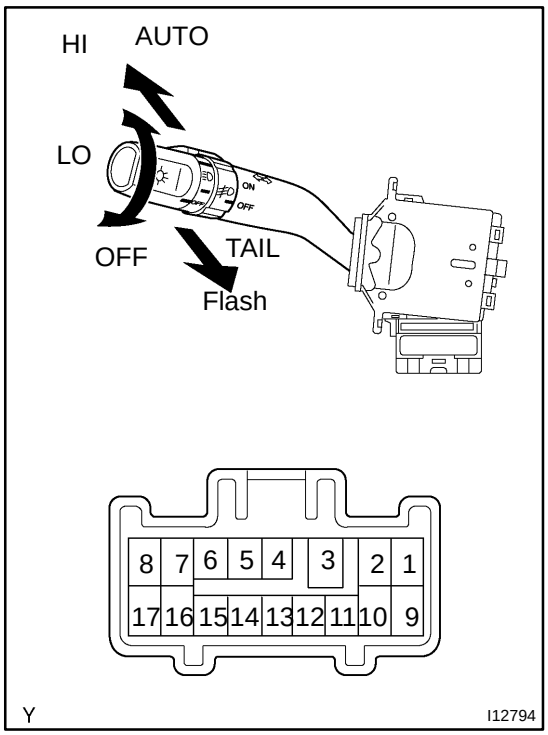

1. INSPECT LIGHT CONTROL SWITCH CONTINUITY

Switch position	Tester connection	Specified condition
OFF	-	No continuity
TAIL	14 - 16	Continuity
HEAD	13 - 14 - 16	Continuity
AUTO	12 - 13 - 14 - 16	Continuity

If continuity is not as specified, replace the switch.

2. INSPECT HEADLIGHT DIMMER SWITCH CONTINUITY

Switch position	Tester connection	Specified condition
Flash	7 - 8 - 16	Continuity
Low beam	16 - 17	Continuity
High beam	7 - 16	Continuity

If continuity is not as specified, replace the switch.

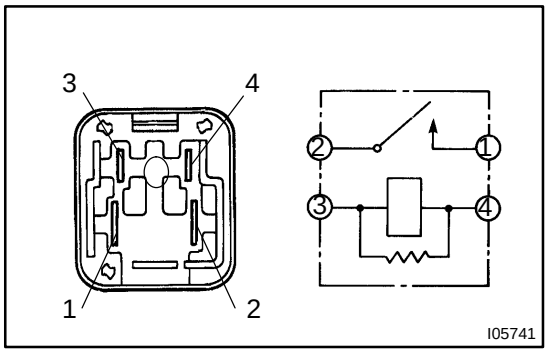

3. INSPECT HEADLIGHT CONTROL RELAY CONTINUITY

Condition	Tester connection	Specified condition
Constant	3 - 4	Continuity
Apply B+ between terminals 3 and 4.	1 - 2	Continuity

If continuity is not as specified, replace the relay.

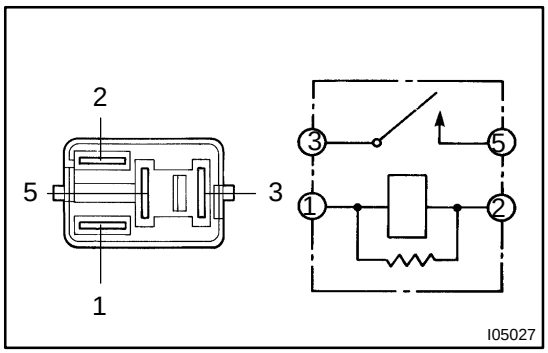

4. INSPECT TAILLIGHT CONTROL RELAY CONTINUITY

Condition	Tester connection	Specified condition
Constant	1 - 2	Continuity
Apply B+ between terminals 1 and 2.	3 - 5	Continuity

If continuity is not as specified, replace the relay.

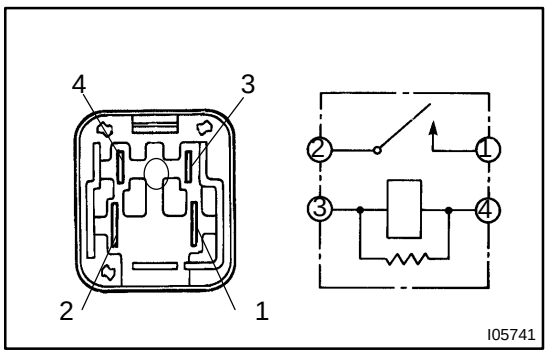

5. INSPECT D.R.L. NO.2 RELAY CIRCUIT

Condition	Tester connection	Specified condition
Constant	3 - 4	Continuity
Apply B+ between terminals 3 and 4.	1 - 2	Continuity

If continuity is not as specified, replace the relay.

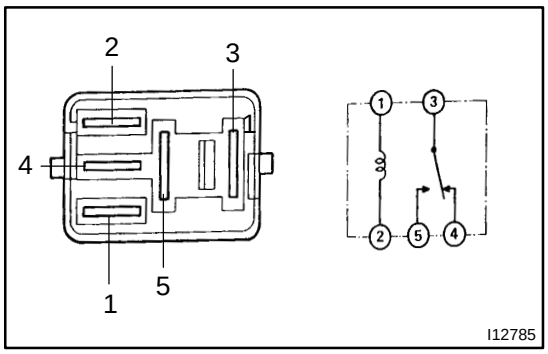

6. INSPECT D.R.L. NO.3 RELAY CIRCUIT

Condition	Tester connection	Specified condition
Constant	1 - 2, 3 - 4	Continuity
Apply B+ between terminals 1 and 2.	3 - 5	No continuity

If continuity is not as specified, replace the relay.

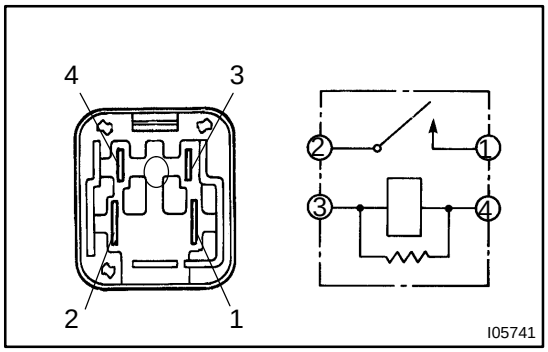

7. INSPECT D.R.L. NO.4 RELAY CIRCUIT

Condition	Tester connection	Specified condition
Constant	3 - 4	Continuity
Apply B+ between terminals 3 and 4.	1 - 2	Continuity

If continuity is not as specified, replace the relay.

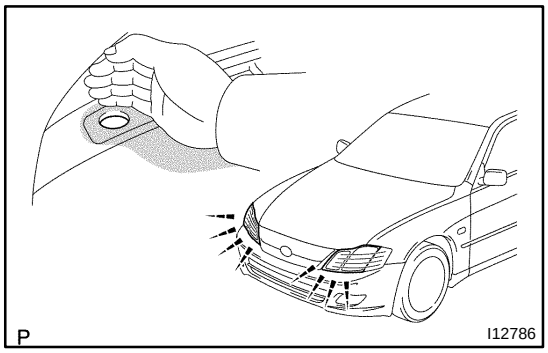

8. AUTO ON:
INSPECT AUTOMATIC LIGHT CONTROL

(a) Turn the ignition switch ON.
(b) Turn the light control switch to AUTO.
(c) Gradually cover the top of the sensor.
(d) Check the accessory lights and the headlights should turn ON.

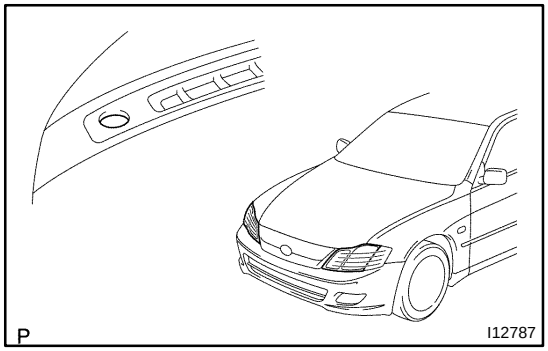

9. AUTO OFF:
INSPECT AUTOMATIC LIGHT CONTROL

(a) Gradually expose the sensor.
(b) Check the headlights and the accessory lights should turn OFF.

10. INSPECT LIGHTS-OFF CONDITION

(a) Turn the ignition switch ON.
(b) Lights auto ON:
Gradually cover the top of the sensor.
(c) Check that the lights go off under the following conditions.
(1) Light control switch is OFF.
(2) The area surrounding the sensor gets bright.
(3) The driver's door is opened with the ignition switch OFF.

11. INSPECT LIGHTS-ON CONDITION

(a) Open the driver's door while the ignition switch is OFF.
(b) Turn the light control switch to AUTO leaving the door open and cover the top of the sensor, make sure that the lights go on when the ignition switch is turned ON.

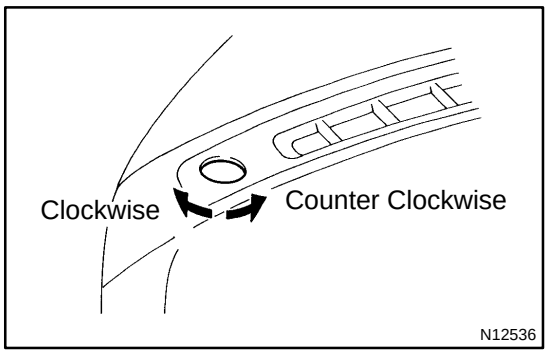

12. ADJUST AUTOMATIC LIGHT CONTROL SENSOR

(a) Adjustment of the light control is performed by turning the sensitivity knob on the sensor.

(b) This will be determined at what light condition the automatic control will take place.

- If response is too quick, turn the knob counterclockwise.
- If response is too slow, turn the knob clockwise.

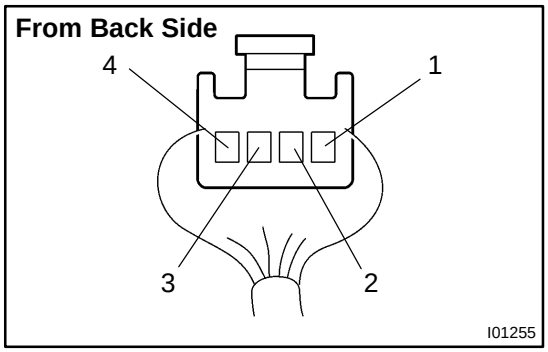

13. Connector connected:
INSPECT AUTOMATIC LIGHT CONTROL SENSOR CIRCUIT

Connect the wire harness side connector to the sensor and inspect wire harness side connector from the back side, as shown.

HINT:

- Ignition switch ON.
- Light control switch AUTO.
- Vehicle's surroundings are bright.

Tester connection	Condition	Specified condition
3 - Ground	Constant	Continuity
1 - Ground	Ignition switch LOCK or ACC	No voltage
1 - Ground	Ignition switch ON	9.5 V or more
Vehicle is under the direct sun light. (Sensor is not covered)		Taillight and Headlight are ON.

If circuit is as specified, try replacing the sensor with a new one.
If the circuit is not as specified, inspect the circuit connected to other parts.

Wire Harness Side

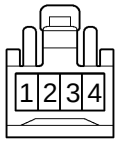

I01254

14. Connector disconnected:
INSPECT AUTOMATIC LIGHT CONTROL SENSOR CIRCUIT

Disconnect the connector from the sensor and inspect the connector on the wire harness side, as shown in the table.

Tester connection	Condition	Specified condition
3 - Ground	Constant	Continuity
1 - Ground	Ignition switch LOCK or ACC	No voltage
1 - Ground	Ignition switch ON	Battery positive voltage
4 - Ground	Ignition switch LOCK or ACC	No voltage
4 - Ground	Ignition switch ON	5.2 - 9.0 V

If circuit is as specified, perform the inspection on the following page.

If the circuit is not as specified, inspect the circuit connected to other parts.

HEADLIGHT AND TAILLIGHT SYSTEM

BE0HV-04

LOCATION

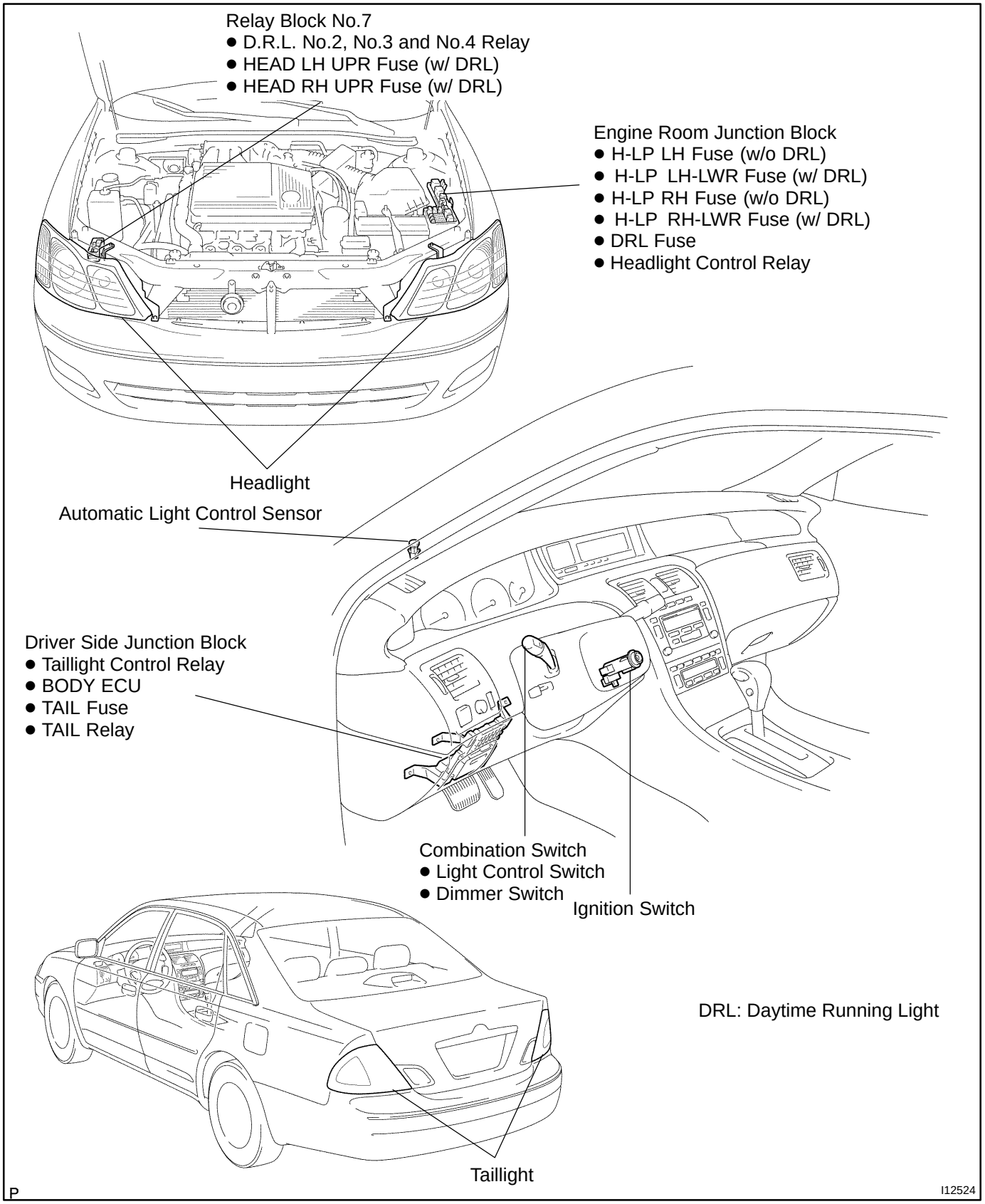

BE1DL-01

INSPECTION

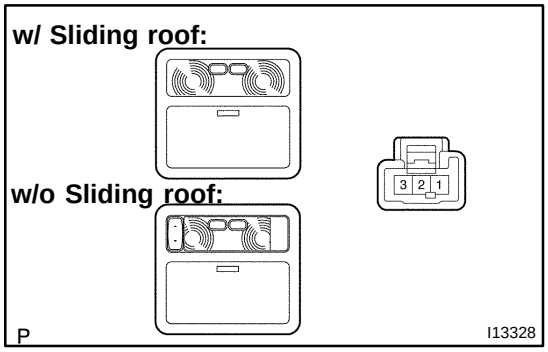

1. INSPECT FRONT PERSONAL LIGHT CONTINUITY

Switch position	Tester connection	Specified condition
OFF	1 - 3	No continuity
-	2 - 3	No continuity
ON	1 - 3	Continuity

If continuity is not as specified, replace the light assembly or bulb.

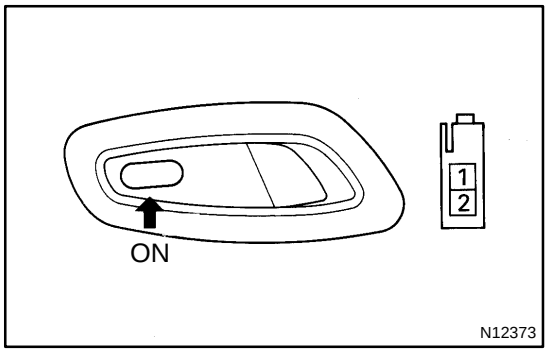

2. INSPECT REAR INTERIOR LIGHT CONTINUITY

Switch position	Tester connection	Specified condition
OFF	1 - 2	No continuity
ON	1 - 2	Continuity

If continuity is not as specified, replace a bulb or rear personal light.

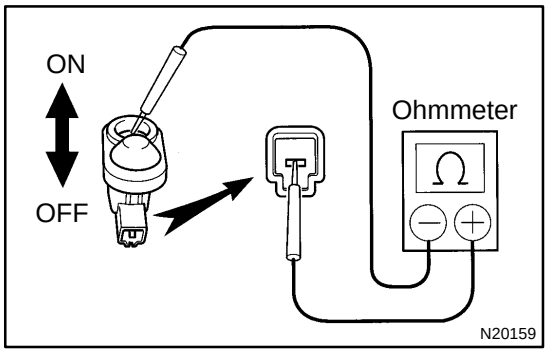

3. INSPECT DOOR COURTESY SWITCH CONTINUITY

(a) Check that continuity exists between terminal and the switch body with the switch ON (switch pin released: opened door).

(b) Check that no continuity exists between terminal and the switch body withe the swtich OFF (switch pin pushed in: closed doors).

If operation is not as specified, replace the switch.

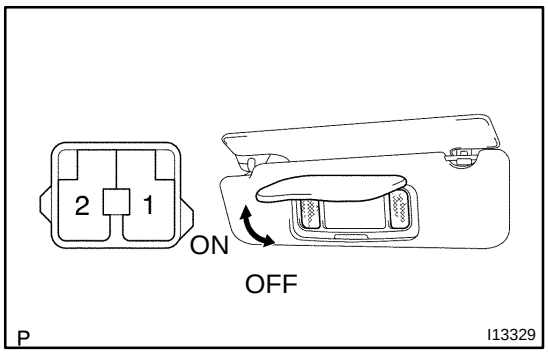

4. INSPECT VANITY LIGHT CONTINUITY

Switch position	Tester connection	Specified condition
OFF	1 - 2	No continuity
ON	1 - 2	Continuity

If continuity is not as specified, replace bulb or vanity light.

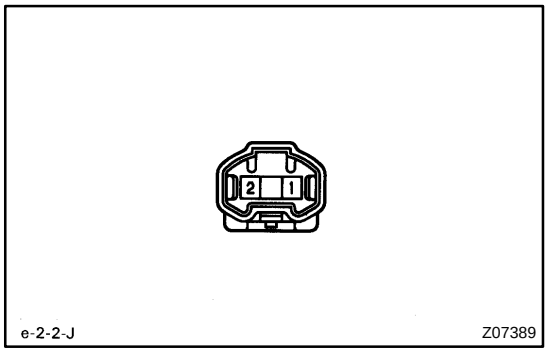

5. INSPECT LUGGAGE COMPARTMENT LIGHT CONTINUITY

Switch position	Tester connection	Specified condition
OFF	-	No continuity
ON	1 - 2	Continuity

If continuity is not as specified, replace the light.

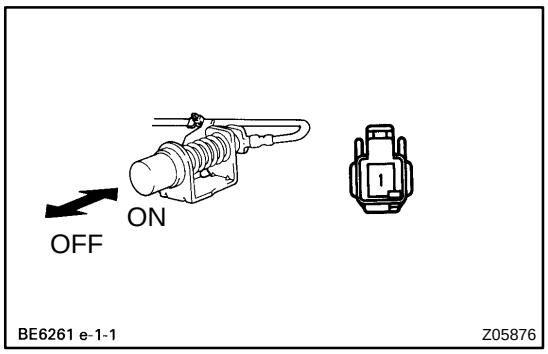

6. INSPECT LUGGAGE COMPARTMENT DOOR COURTESY SWITCH CONTINUITY

Condition	Tester connection	Specified condition
OFF	-	No continuity
ON	1 - Switch body	Continuity

If operation is not as specified, replace the switch.

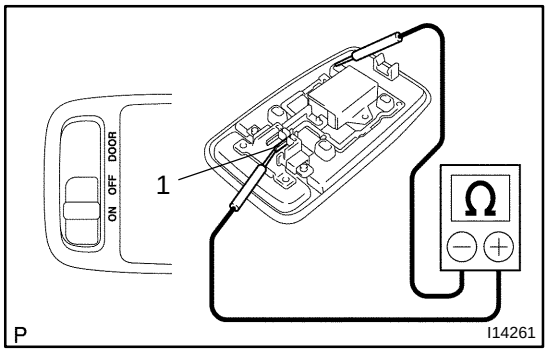

7. INSPECT INTERIOR LIGHT ASSEMBLY CONTINUITY

(a) Disconnect the connector from room light assembly.

(b) Turn the room light switch ON, check that there is continuity between terminal 1 and body ground.

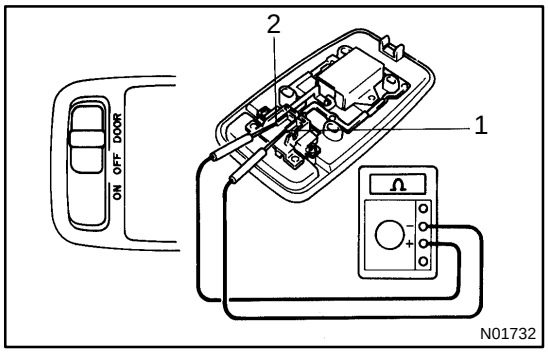

(c) Turn the room light switch DOOR, check that there is continuity between terminal 1 and 2.

If operation is not as specified, replace the switch.

8. INSPECT ILLMINATION ENTRY SYSTEM
(See Page BE-2)

INTERIOR LIGHT SYSTEM

LOCATION

BE0I2-03

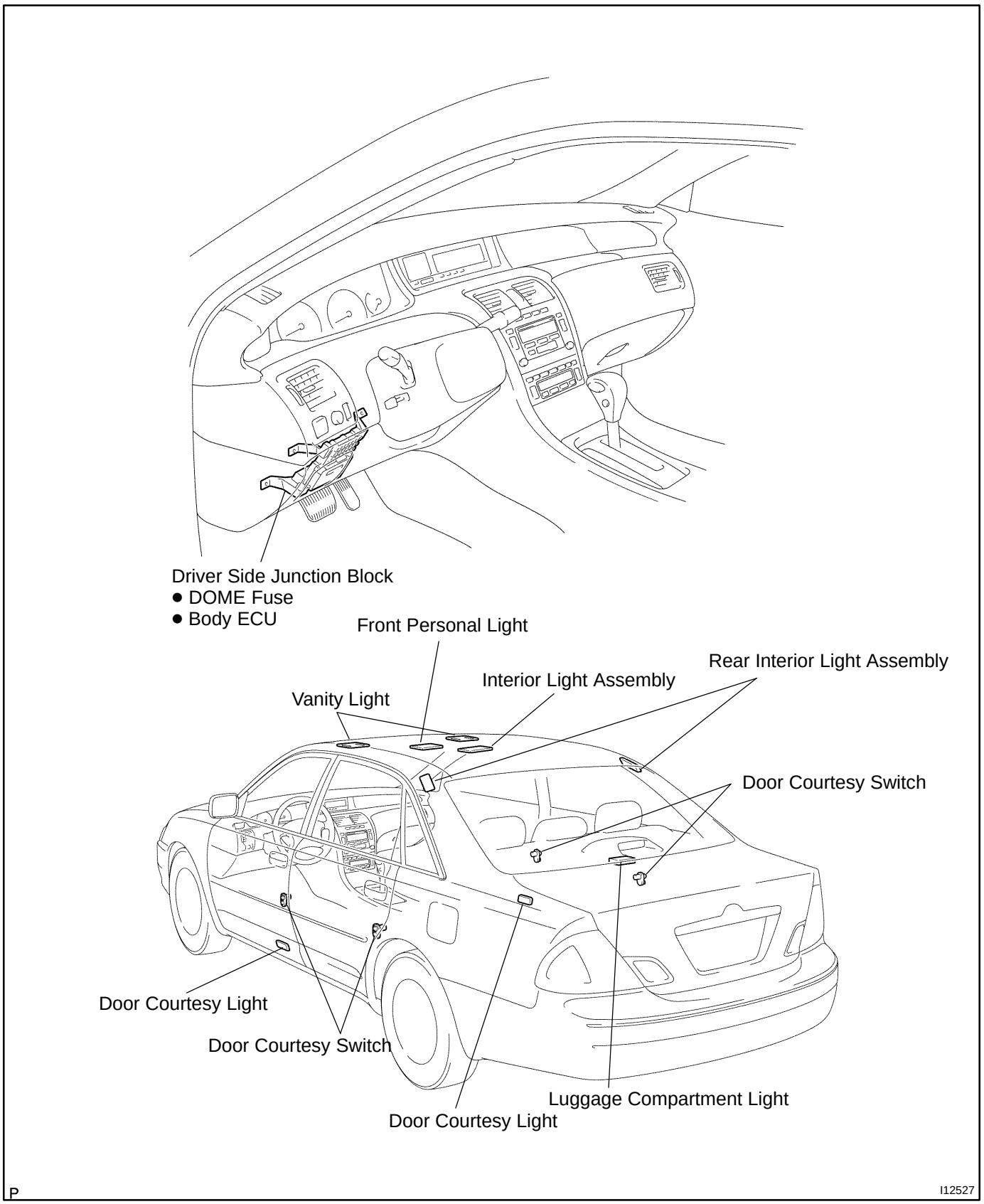

BE1DI-01

INSPECTION

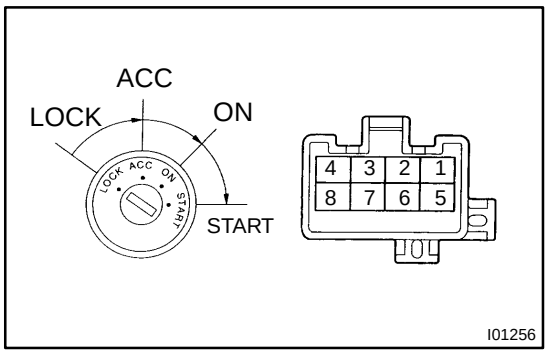

1. INSPECT IGNITION SWITCH CONTINUITY

Switch position	Tester connection	Specified condition
LOCK	-	No continuity
ACC	2 - 3	Continuity
ON	2 - 3 - 4 6 - 7	Continuity
START	1 - 2 - 4 6 - 7 - 8	Continuity

If continuity is not as specified, replace the switch.

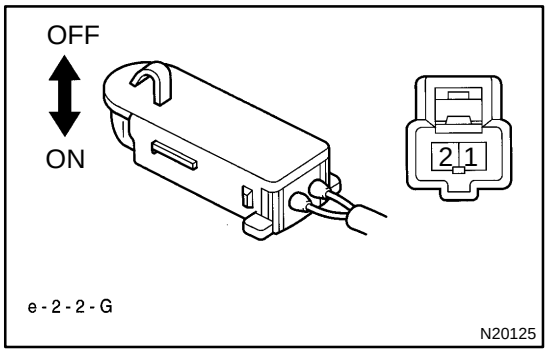

2. INSPECT KEY UNLOCK WARNING SWITCH CONTINUITY

Condition	Tester connection	Specified condition
Switch OFF (Key removed)	-	No continuity
Switch ON (Key set)	1 - 2	Continuity

If continuity is not as specified, replace the switch.

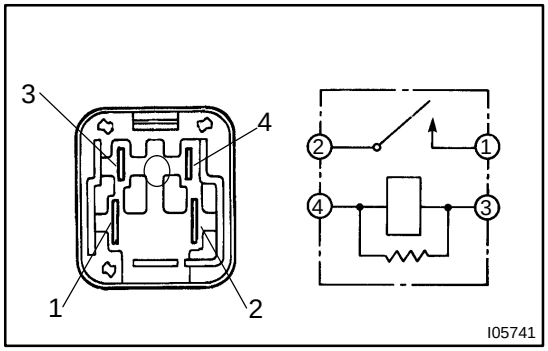

3. INSPECT IG1 RELAY CONTINUITY

Condition	Tester connection	Specified condition
Constant	3 - 4	Continuity
Apply B+ between terminal 3 and 4	1 - 2	Continuity

If continuity is not as specified, replace the switch.

IGNITION SWITCH AND KEY UNLOCK WARNING SWITCH

BE0HT-04

LOCATION

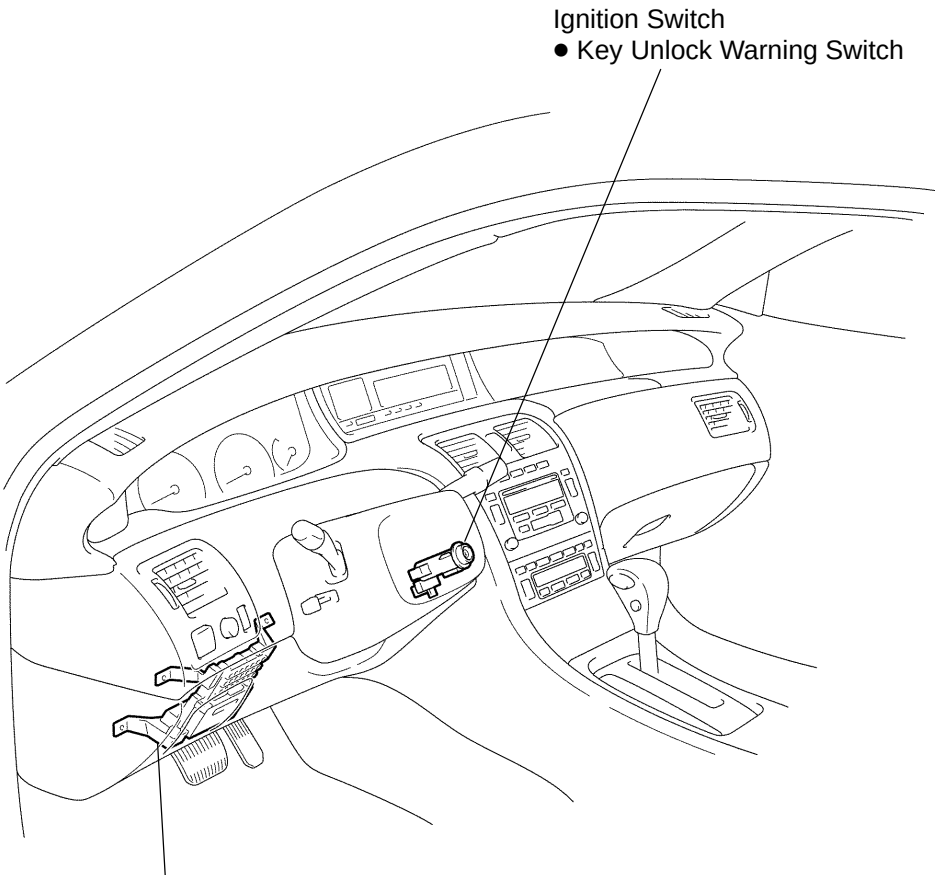

P

I12523

BE1EH-01

INSPECTION

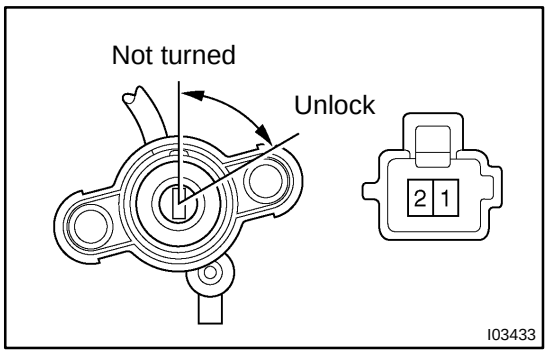

1. INSPECT LUGGAGE COMPARTMENT DOOR KEY LOCK AND UNLOCK SWITCH CONTINUITY

Switch position	Tester connection	Specified condition
Not turned	-	No continuity
UNLOCK	1 - 2	Continuity

If continuity is not as specified, replace the switch.

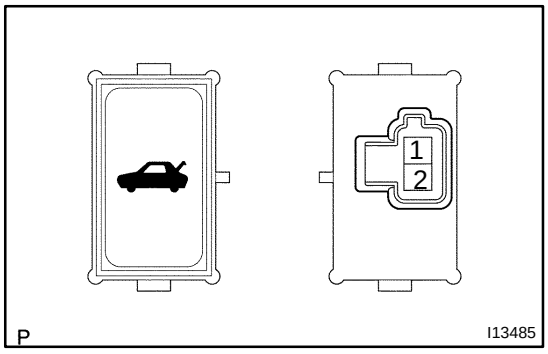

2. INSPECT LUGGAGE COMPARTMENT DOOR OPENER MAIN SWITCH CONTINUITY

Switch position	Tester connection	Specified condition
OFF	-	No continuity
ON	1 - 2	Continuity

If continuity is not as specified, replace the switch.

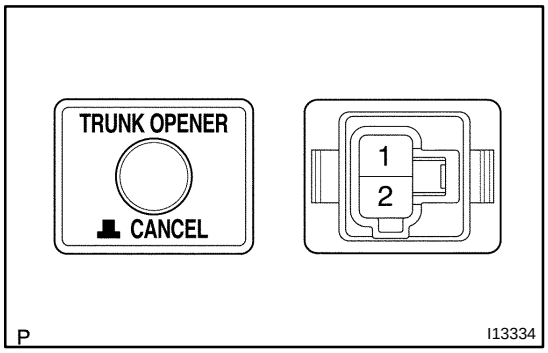

3. INSPECT LUGGAGE COMPARTMENT DOOR OPENER CANCEL SWITCH CONTINUITY

Switch position	Tester connection	Specified condition
OFF	-	No continuity
ON	1 - 2	Continuity

If continuity is not as specified, replace the switch.

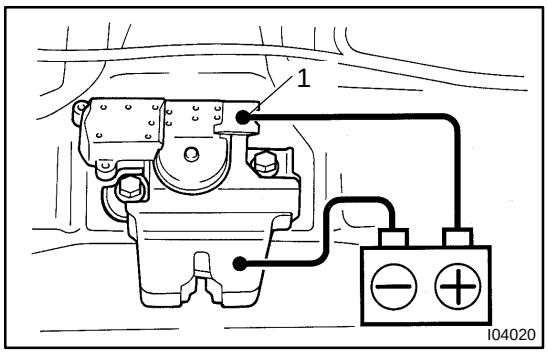

4. INSPECT LUGGAGE COMPARTMENT DOOR OPENER MOTOR OPERATION

Connect positive (+) lead to the terminal 1 and negative (-) lead to the opener motor body, and check that the motor operateds. If operation is not as specified, replace the lock.

BE1EG-01

LUGGAGE COMPARTMENT DOOR OPENER SYSTEM

LOCATION

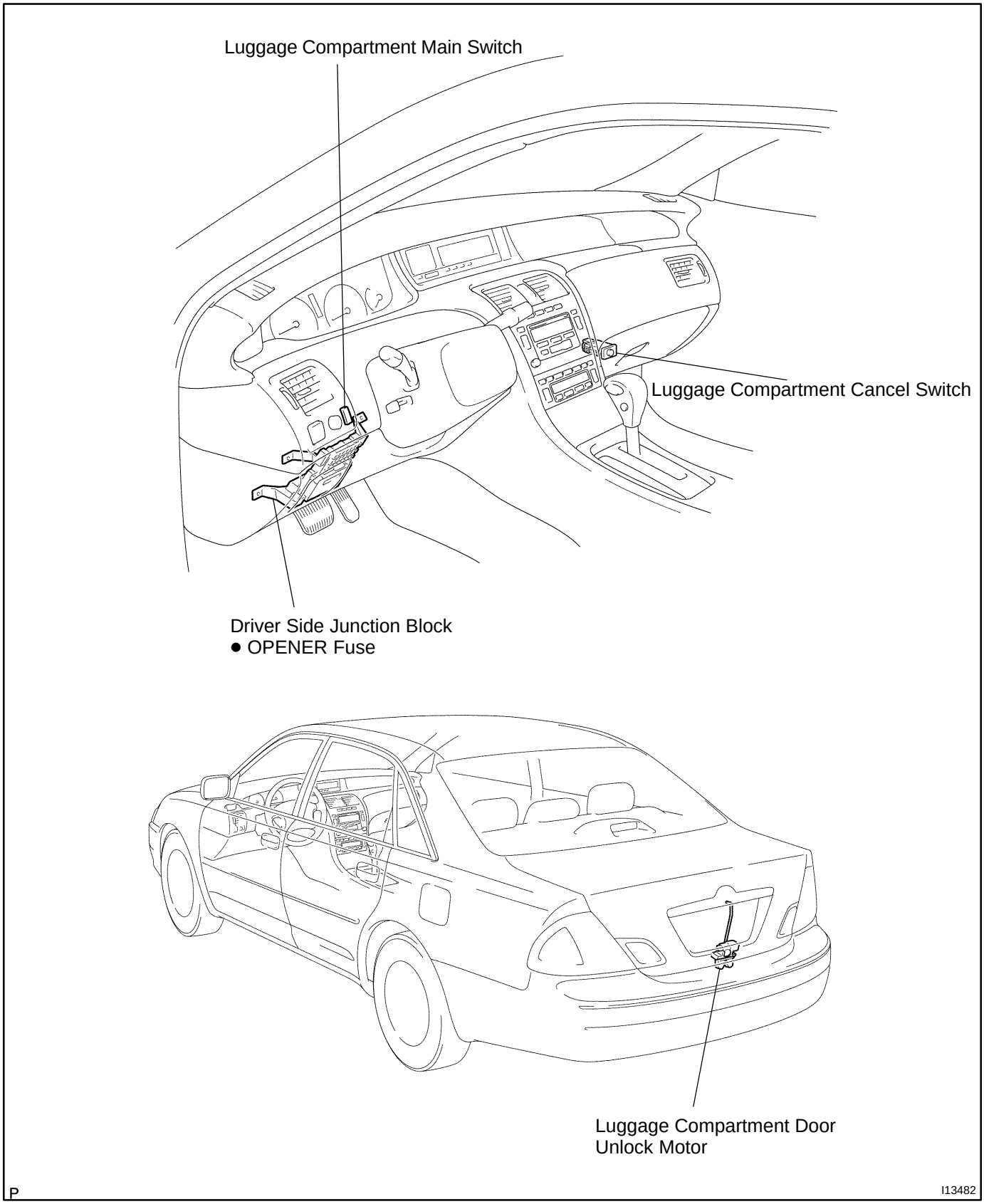

BE212-01

ADJUSTMENT

ENABLING/DISABLING AUTO DOOR LOCK FUNCTION

(a) To disable auto door lock:

(1) Enter the vehicle and shut all doors.

(2) Insert the key into the ignition cylinder and turn it to the ON position (not ACC).

(3) Open the driver's door and keep it open.

(4) Turn the key to the LOCK position and remove it from the ignition cylinder.

(5) Insert the key into the ignition cylinder and remove it. Repeat this operation three more times. (End this step with the key out of the ignition cylinder.)

(6) Push the "UNLOCK" button on the driver's door master switch 5 times within 10 seconds. Wait at least 10 seconds and shut the driver's door.

(7) Verify auto lock operation has been disabled by starting the engine, putting the vehicle into a gear and releasing the brake pedal.

(b) To enable auto door lock:

Follow the same sequence as above, except step 6. In step 6, push the "LOCK" button on the driver's door master switch 5 times within 10 seconds. Wait at least 10 seconds and shut the driver's door.

BE1DY-02

INSPECTION

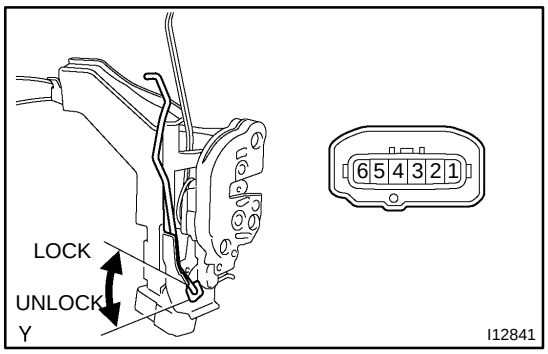

1. Driver's door:
INSPECT DOOR KEY LOCK AND UNLOCK SWITCH CONTINUITY

Switch position	Tester connection	Specified condition
LOCK	3 - 5	Continuity
OFF	-	No continuity
UNLOCK	3 - 6	Continuity

If continuity is not as specified, replace the switch.

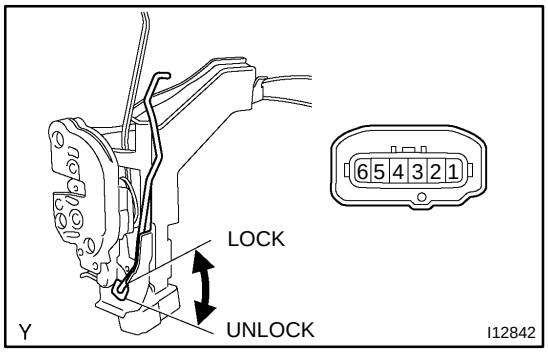

2. Passenger's Door:
INSPECT DOOR KEY LOCK AND UNLOCK SWITCH CONTINUITY

Switch position	Tester connection	Specified condition
LOCK	2 - 4	Continuity
OFF	-	No continuity
UNLOCK	1 - 4	Continuity

If continuity is not as specified, replace the switch.

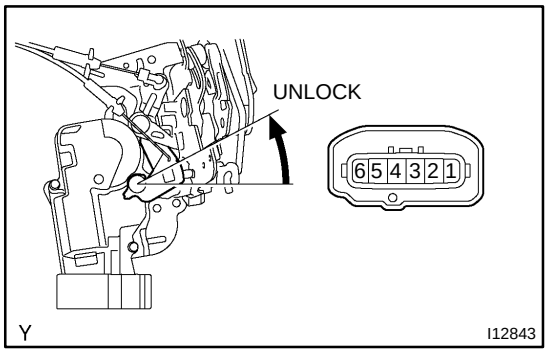

3. Driver's Door:
INSPECT DOOR UNLOCK DETECTION SWITCH CONTINUITY

Switch position	Tester connection	Specified condition
OFF (Door Lock set to LOCK)	-	No continuity
ON (Door Lock set to UNLOCK)	3 - 4	Continuity

If continuity is not as specified, replace the switch.

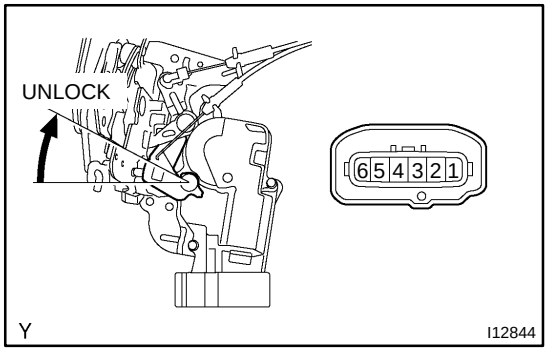

4. Passenger's Door:
INSPECT DOOR UNLOCK DETECTION SWITCH CONTINUITY

Switch position	Tester connection	Specified condition
OFF (Door Lock set to LOCK)	-	No continuity
ON (Door Lock set to UNLOCK)	3 - 4	Continuity

If continuity is not as specified, replace the switch.

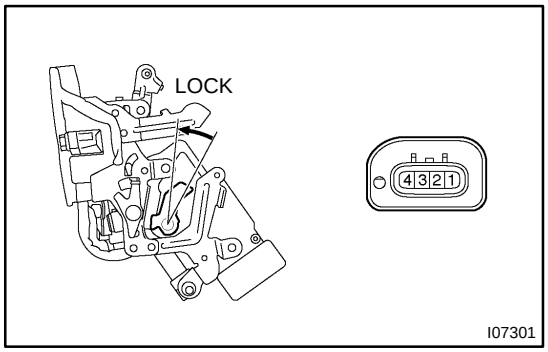

5. Rear LH Door:
INSPECT DOOR UNLOCK DETECTION SWITCH CONTINUITY

Switch position	Tester connection	Specified condition
OFF (Door Lock set to LOCK)	-	No continuity
ON (Door Lock set to UNLOCK)	1 - 2	Continuity

If continuity is not as specified, replace the switch.

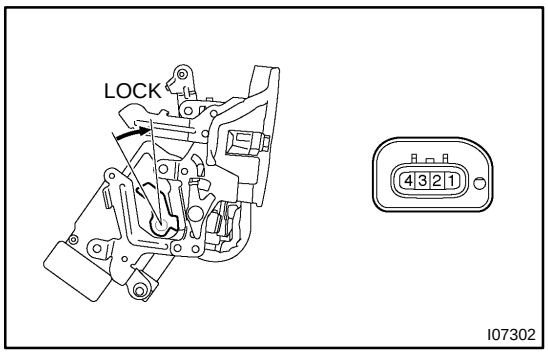

6. Rear RH Door:
INSPECT DOOR UNLOCK DETECTION SWITCH CONTINUITY

Switch position	Tester connection	Specified condition
OFF (Door Lock set to LOCK)	-	No continuity
ON (Door Lock set to UNLOCK)	3 - 4	Continuity

If continuity is not as specified, replace the switch.

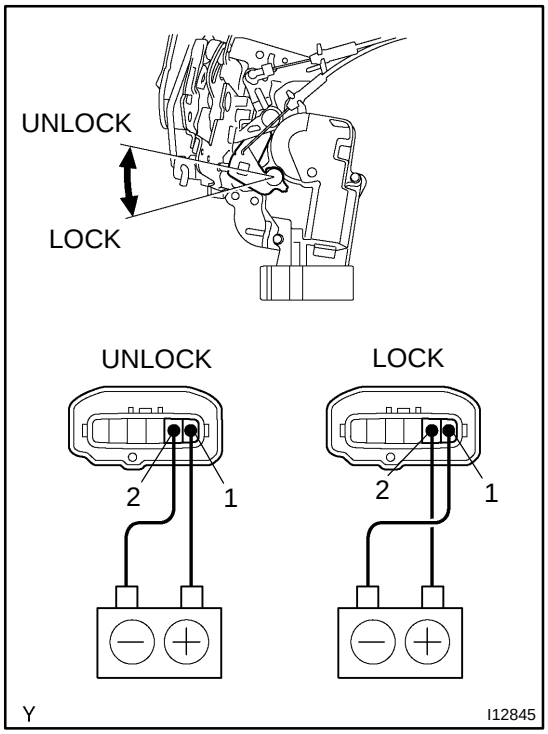

7. Driver's Door:
INSPECT DOOR LOCK MOTOR OPERATION

(a) Connect the positive (+) lead from the battery to terminal 1 and the negative (-) lead to terminal 2, and check that the door lock link moves to UNLOCK position.

(b) Reverse the polarity and check that the door lock link moves to LOCK position.

If operation is not as specified, replace the door lock assembly.

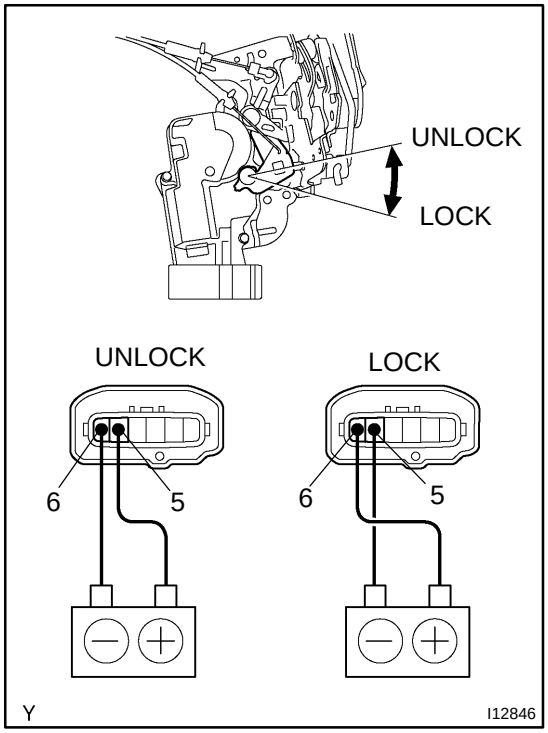

8. Passenger's door:
INSPECT DOOR LOCK MOTOR OPERATION

(a) Connect the positive (+) lead from the battery to terminal 5 and the negative (-) lead to terminal 6, and check that the door lock link moves to UNLOCK position.

(b) Reverse the polarity and check that the door lock link moves to LOCK position.

If operation is not as specified, replace the door lock assembly.

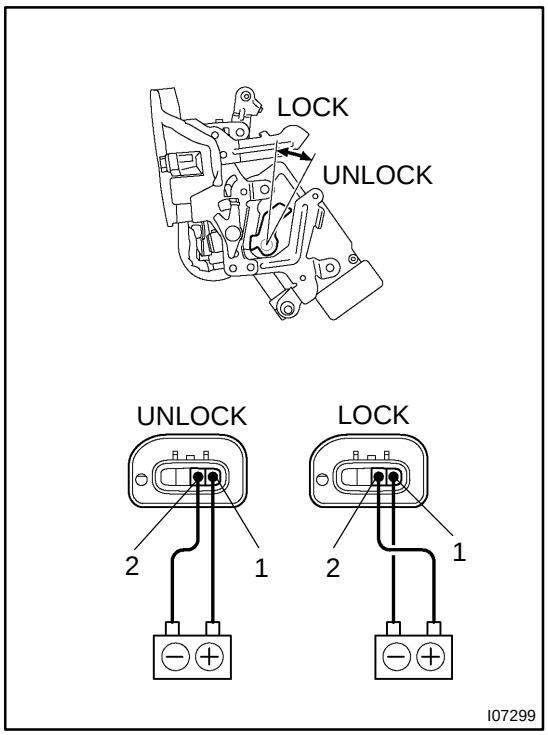

9. Rear LH Door:
INSPECT DOOR LOCK MOTOR OPERATION

(a) Connect the positive (+) lead from the battery to terminal 1 and the negative (-) lead to terminal 2, and check that the door lock link moves to UNLOCK position.

(b) Reverse the polarity and check that the door lock link moves to LOCK position.

If operation is not as specified, replace the door lock assembly.

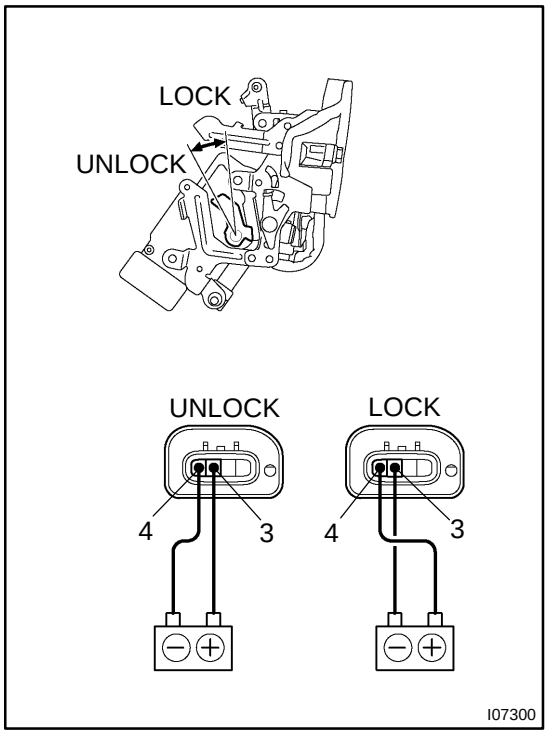

10. Rear RH door:
INSPECT DOOR LOCK MOTOR OPERATION

(a) Connect the positive (+) lead from the battery to terminal 4 and the negative (-) lead to terminal 5, and check that the door lock link moves to UNLOCK position.

(b) Reverse the polarity and check that the door lock link moves to LOCK position.

If operation is not as specified, replace the door lock assembly.

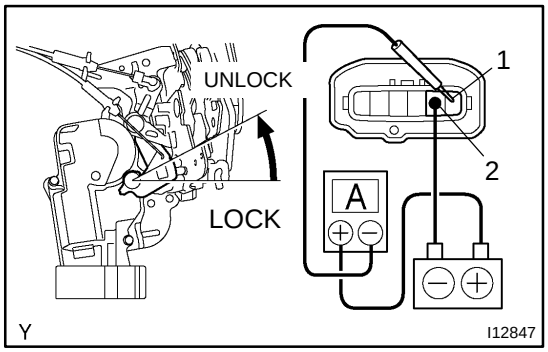

11. Using an ammeter:
INSPECT DRIVER'S DOOR PTC THERMISTOR OPERATION

(a) Connect the negative (-) lead from the battery to terminal 2.

(b) Connect the positive (+) lead from the ammeter to terminal 1 and the negative (-) lead to battery positive (+) terminal, and check that the current changes from approximately 3.2 A to less than 0.5 A within 20 to 70 seconds.

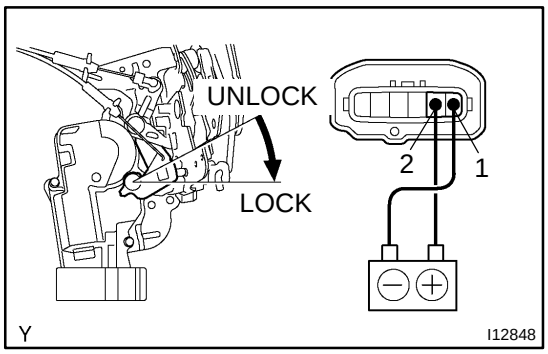

(c) Disconnect the leads from terminals.
(d) Approximately 60 seconds later, connect the positive (+) lead from the battery to terminal 2 and the negative (-) lead to terminal 1, and check that the door lock moves to the LOCK position.

If operation is not as specified, replace the door lock assembly.

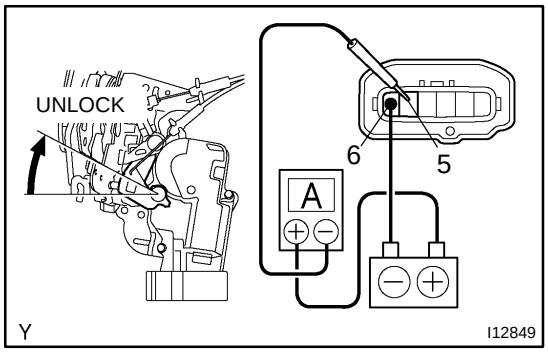

12. Using an ammeter:
INSPECT PASSENGER'S DOOR PTC THERMISTOR OPERATION

(a) Connect the negative (-) lead from the battery to terminal 6.
(b) Connect the negative (-) lead from the ammeter to terminal 5 and the positive (+) lead to battery positive (+) terminal, and check that the current changes from approximately 3.2 A to less than 0.5 A within 20 to 70 seconds.

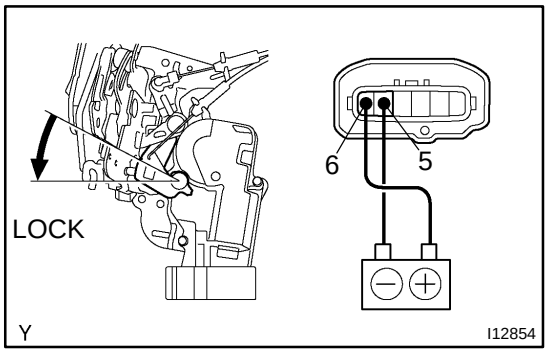

(c) Disconnect the leads from terminals.
(d) Approximately 60 seconds later, connect the positive (+) lead from the battery to terminal 6 and the negative (-) lead to terminal 5, and check that the door lock moves to the LOCK position.

If operation is not as specified, replace the door lock assembly.

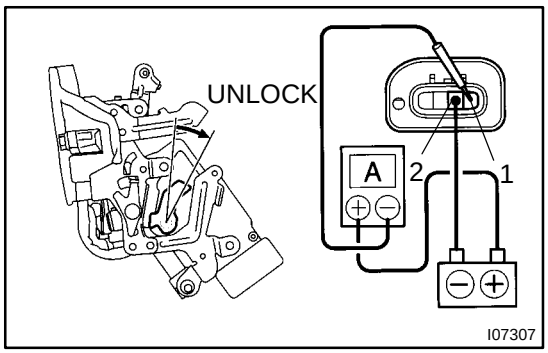

13. Using an ammeter:
INSPECT REAR LH DOOR PTC THERMISTOR OPERATION

(a) Connect the negative (-) lead from the battery to terminal 2.
(b) Connect the negative (-) lead from the ammeter to terminal 1 and the positive (+) lead to battery positive (+) terminal, and check that the current changes from approximately 3.2 A to less than 0.5 A within 20 to 70 seconds.

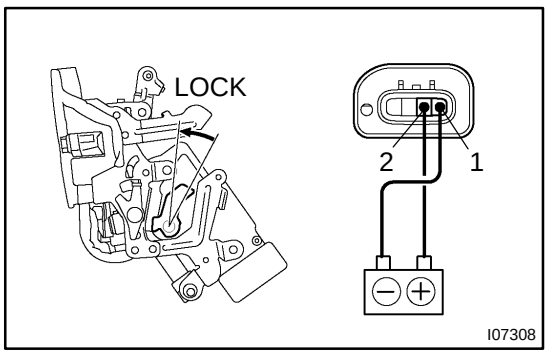

(c) Disconnect the leads from terminals.
(d) Approximately 60 seconds later, connect the positive (+) lead from the battery to terminal 2 and the negative (-) lead to terminal 1, and check that the door lock moves to the LOCK position.

If operation is not as specified, replace the door lock assembly.

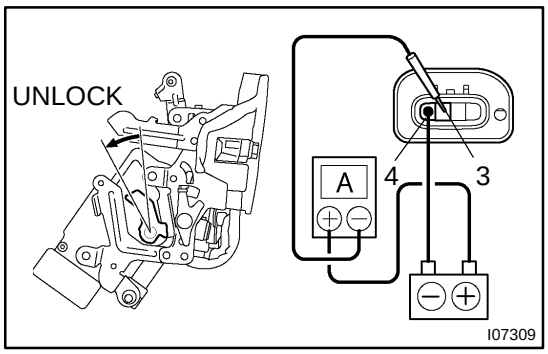

14. Using an ammeter:
INSPECT REAR RH PTC THERMISTOR OPERATION

(a) Connect the negative (-) lead from the battery to terminal 4.

(b) Connect the negative (-) lead from the ammeter to terminal 3 and the positive (+) lead to battery positive (+) terminal, and check that the current changes from approximately 3.2 A to less than 0.5 A within 20 to 70 seconds.

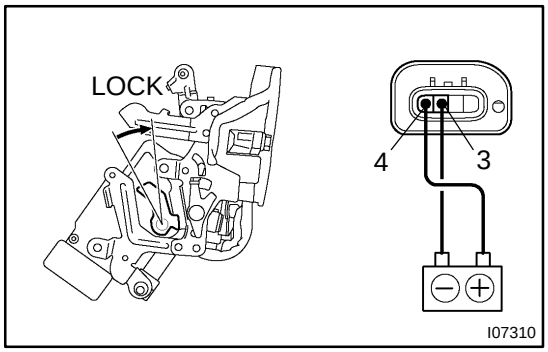

(c) Disconnect the leads from terminals.

(d) Approximately 60 seconds later, connect the positive (+) lead from the battery to terminal 4 and the negative (-) lead to terminal 3, and check that the door lock moves to the LOCK position.

If operation is not as specified, replace the door lock assembly.

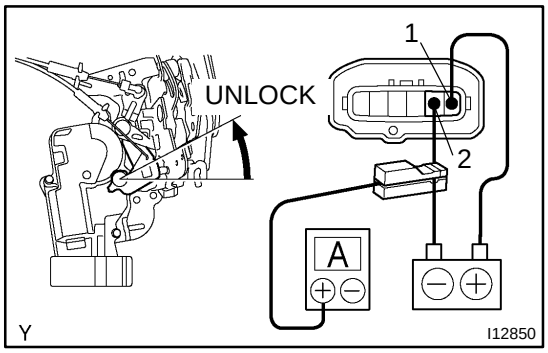

15. Using an ammeter with a current-measuring probe:
INSPECT DRIVER'S DOOR PTC THERMISTOR OPERATION

(a) Connect the positive (+) lead from the battery to terminal 1 and the negative (-) lead to terminal 2.

(b) Attach a current-measuring probe to either the positive (+) lead or the negative (-) lead, and check that the current changes from approximately 3.2 A to less than 0.5 A within 20 to 70 seconds.

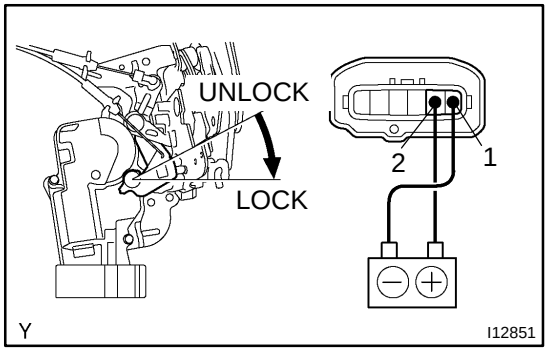

(c) Disconnect the leads from terminals.

(d) Approximately 60 seconds later, reverse the polarity, and check that the door lock moves to the LOCK position.

If operation is not as specified, replace the door lock assembly.

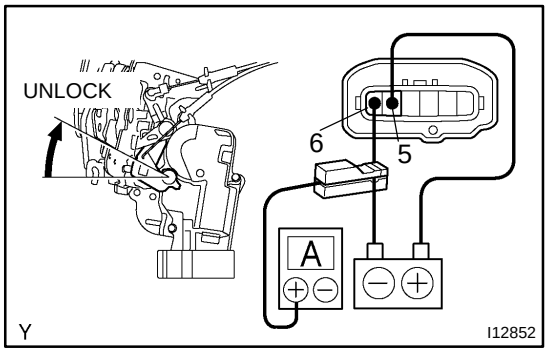

16. Using an ammeter with a current-measuring probe:
INSPECT PASSENGER'S DOOR PTC THERMISTOR OPERATION

(a) Connect the positive (+) lead from the battery to terminal 5 and the negative (-) lead to terminal 6.

(b) Attach a current-measuring probe to either the positive (+) lead or the negative (-) lead, and check that the current changes from approximately 3.2 A to less than 0.5 A within 20 to 70 seconds.

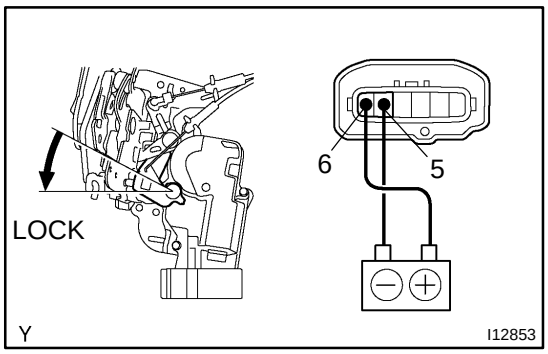

(c) Disconnect the leads from terminals.
(d) Approximately 60 seconds later, reverse the polarity, and check that the door lock moves to the LOCK position.

If operation is not as specified, replace the door lock assembly.

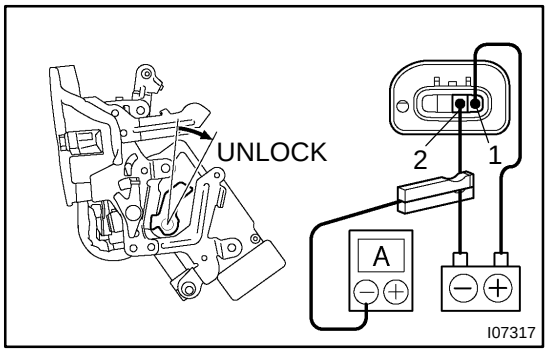

17. Using an ammeter with a current-measuring probe: INSPECT REAR LH DOOR PTC THERMISTOR OPERATION

(a) Connect the positive (+) lead from the battery to terminal 1 and the negative (-) lead to terminal 2.
(b) Attach a current-measuring probe to either the positive (+) lead or the negative (-) lead, and check that the current changes from approximately 3.2 A to less than 0.5 A within 20 to 70 seconds.

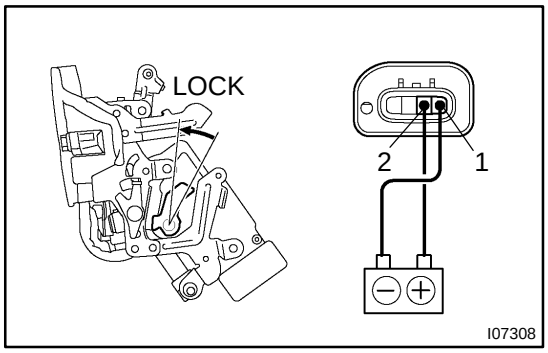

(c) Disconnect the leads from terminals.
(d) Approximately 60 seconds later, reverse the polarity, and check that the door lock moves to the LOCK position.

If operation is not as specified, replace the door lock assembly.

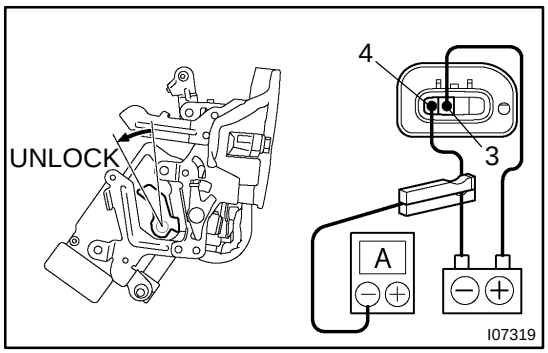

18. Using an ammeter with a current-measuring probe: INSPECT REAR RH DOOR PTC THERMISTOR OPERATION

(a) Connect the positive (+) lead from the battery to terminal 3 and the negative (-) lead to terminal 4.
(b) Attach a current-measuring probe to either the positive (+) lead or the negative (-) lead, and check that the current changes from approximately 3.2 A to less than 0.5 A within 20 to 70 seconds.

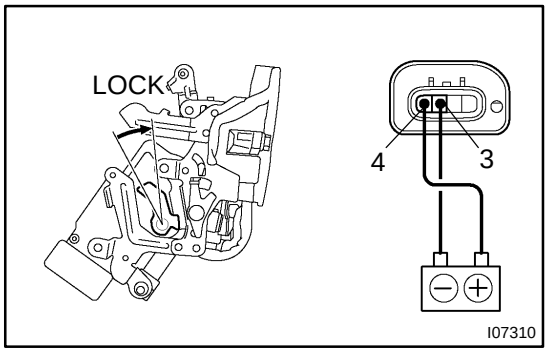

(c) Disconnect the leads from terminals.
(d) Approximately 60 seconds later, reverse the polarity, and check that the door lock moves to the LOCK position.

If operation is not as specified, replace the door lock assembly.

POWER DOOR LOCK CONTROL SYSTEM

BE0IJ-03

LOCATION

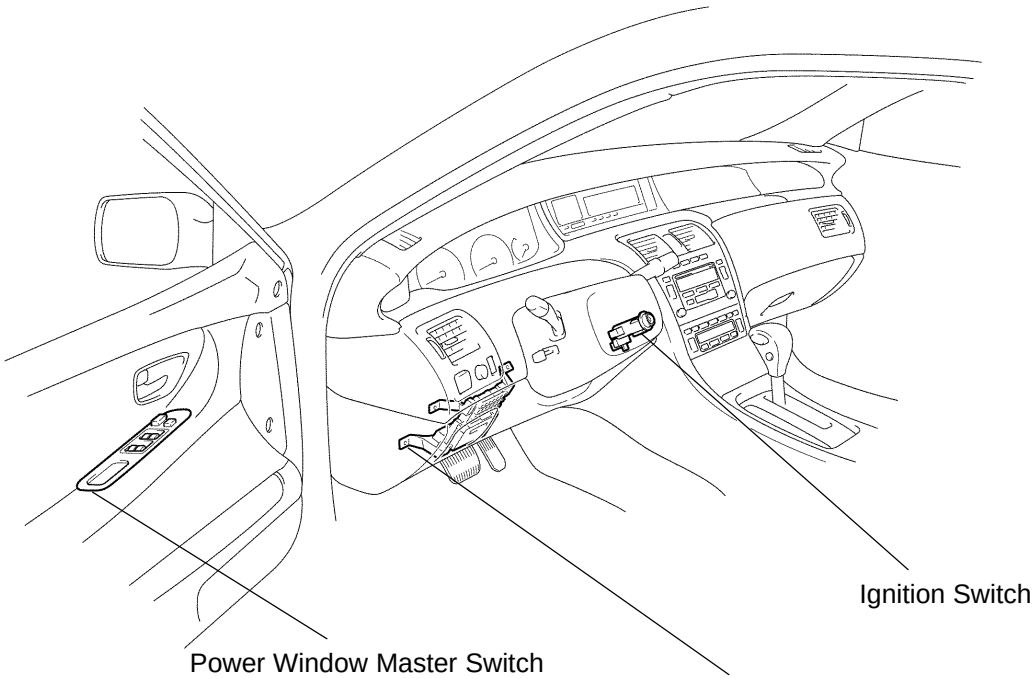

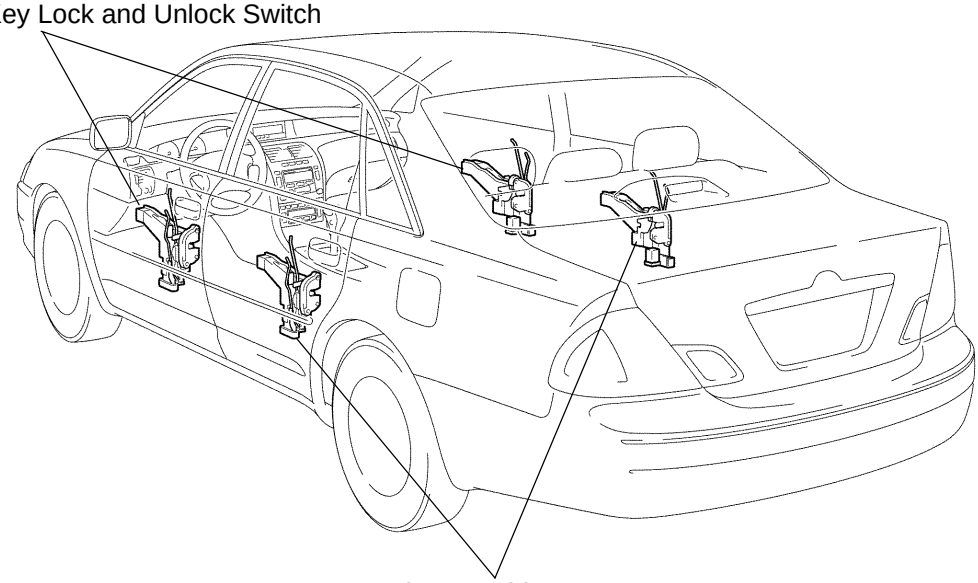

P

I12855

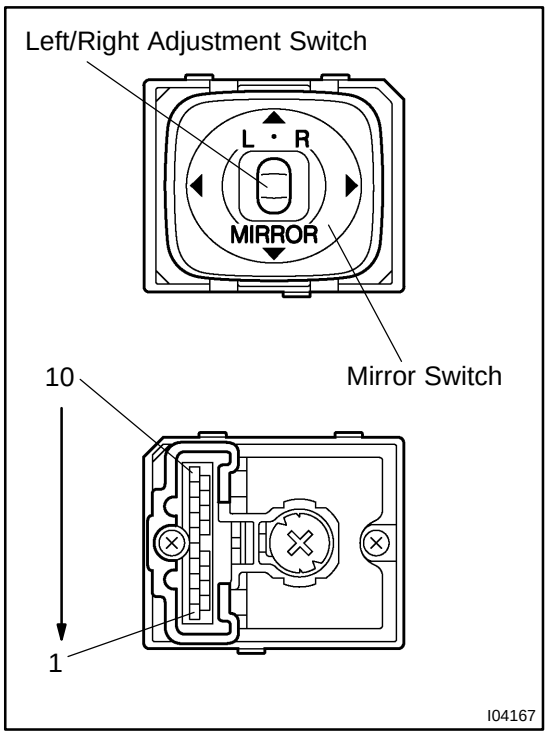

BE1E8-01

INSPECTION

1. W/O Memory:

INSPECT LEFT SIDE MIRROR SWITCH CONTINUITY

Switch position	Tester connection	Specified condition
OFF	-	No continuity
UP	3 - 4, 7 - 8	Continuity
DOWN	3 - 8, 4 - 7	Continuity
LEFT	4 - 9, 7 - 8	Continuity
RIGHT	4 - 7, 8 - 9	Continuity

2. INSPECT RIGHT SIDE MIRROR SWITCH CONTINUITY

Switch position	Tester connection	Specified condition
OFF	-	No continuity
UP	2 - 4, 7 - 8	Continuity
DOWN	2 - 8, 4 - 7	Continuity
LEFT	4 - 10, 7 - 8	Continuity
RIGHT	4 - 7, 8 - 10	Continuity

If continuity is not as specified, replace the switch.

If continuity is as specified. inspect the switch circuit.

3. W/ Memory:

INSPECT LEFT SIDE MIRROR SWITCH CONTINUITY

Switch position	Tester connection	Resistance (Ω)
LEFE	8 - 9	100
RIGHT	8 - 9	0
Illumination	5 - 6	Continuity

If continuity as specified, replace the switch.

4. w/ Memory:

INSPECT MIRROR SWITCH RESISTANCE

HINT:

- Set the Left/Right abjustment switch to either position on the left or right.
- Measure resistance between terminals 7 and 9 at each switch position, as shown in the chart.

Switch Position	Resistance (Ω)
UP	Approx. 100
RIGHT	250
DOWN	470
LEFT	800

If resistance as specified, replace the switch.

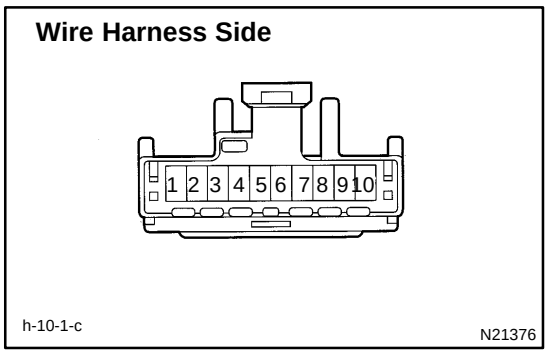

5. INSPECT MIRROR SWITCH CIRCUIT

Disconnect the connector from the switch and inspect the connector on the wire harness side.

Tester connection	Condition	Specified condition
8 - Ground	Constant	Continuity
4 - Ground	Ignition switch position LOCK	No voltage
4 - Ground	Ignition switch position ACC or ON	Battery voltage

If the circuit is not as specified, inspect the circuits connected to other parts.

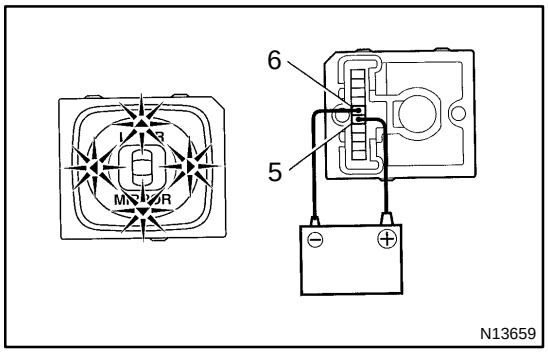

6. INSPECT MIRROR SWITCH INDICATOR LIGHT OPERATION

Connect the positive (+) lead from the battery to terminal 5 and the negative (-) lead to terminal 6, and check that the indicator light does not light up, replace the switch.

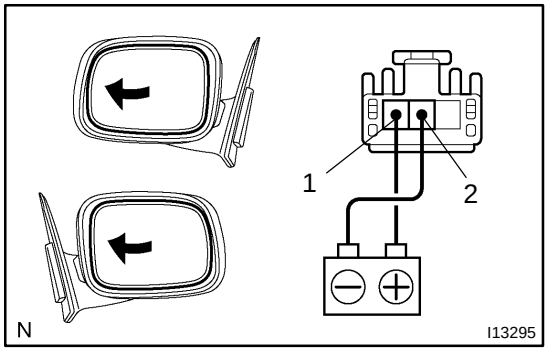

7. w/o Mirror defogger and driving position memory: INSPECT MIRROR MOTOR OPERATION

(a) Connect the positive (+) lead from the battery to terminal 1 and the negative (-) lead to terminal 2, and check that the mirror turns to the left side.

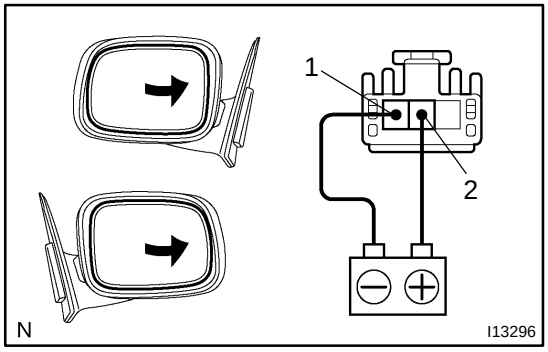

(b) Reverse the polarity, and check that the mirror turns to the right side.

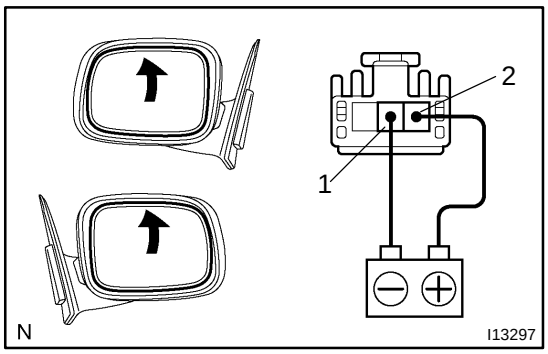

(c) Connect the positive (+) lead from the battery to terminal 2 and the negative (-) lead to terminal 1, and check that the mirror turns upward.

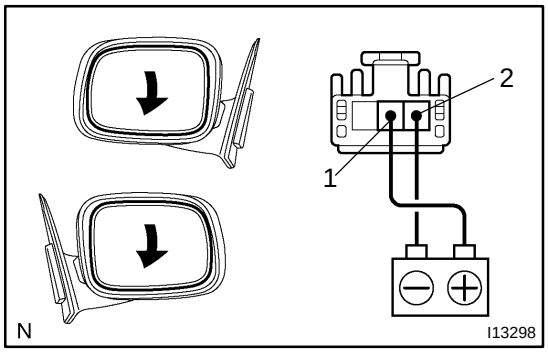

(d) Reverse the polarity, and check that the mirror turns downward.

If operation is not as specified, replace the mirror assembly.

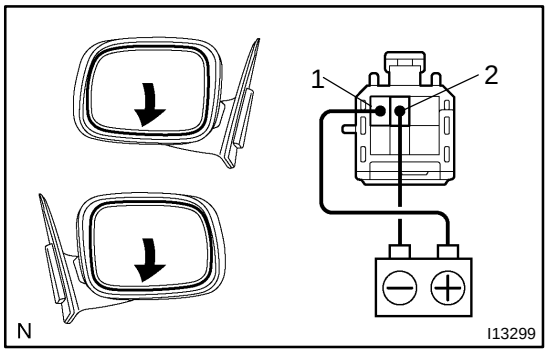

8. w/ Mirror Defogger:
INSPECT MIRROR MOTOR OPERATION

(a) Connect the positive (+) lead from the battery to terminal 1 and the negative (-) lead to terminal 2, and check that the mirror turns to the left side.

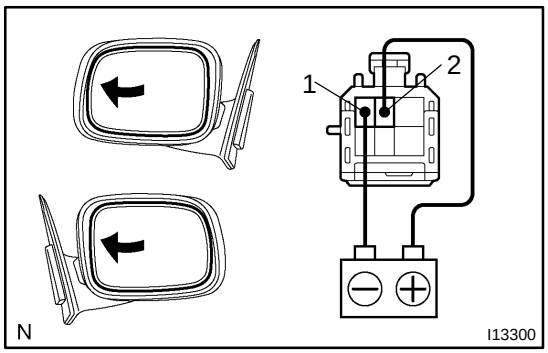

(b) Reverse the polarity, and check that the mirror turns downward.

If operation is not as specified, replace the mirror assembly.

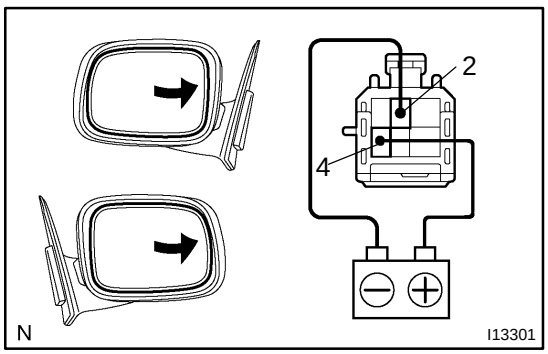

(c) Connect the positive (+) lead from the battery to terminal 4 and the negative (-) lead to terminal 2, and check that the mirror turns upward.

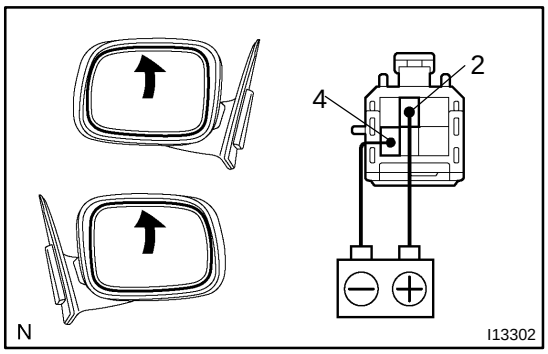

(d) Reverse the polarity, and check that the mirror turns downward.

If operation is not as specified, replace the mirror assembly.

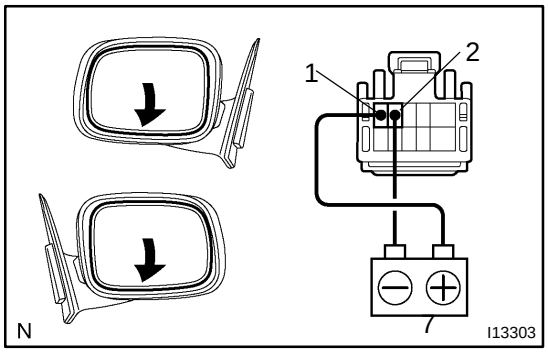

9. w/ Driving position memory:
INSPECT MIRROR POSITION MOTOR OPERATION

(a) Connect the positive (+) lead from the battery to terminal 1 and the negative (-) lead to terminal 2, and check that the mirror turns to the left side.

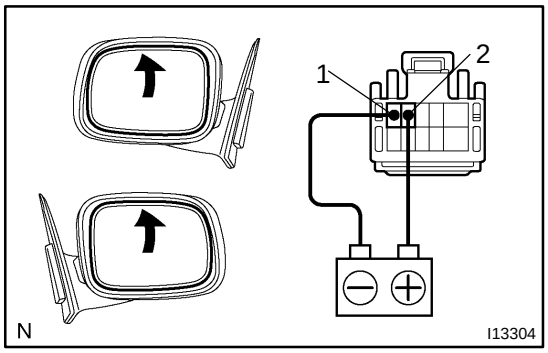

(b) Reverse the polarity, and check that the mirror turns downward.

If operation is not as specified, replace the mirror assembly.

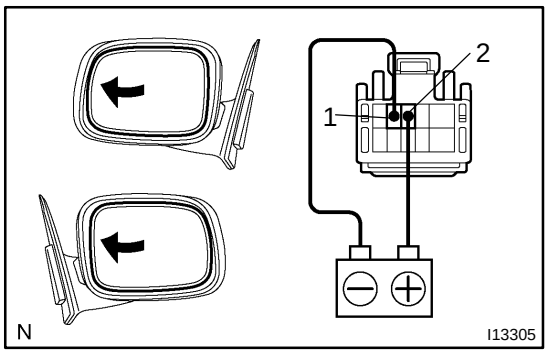

(c) Connect the positive (+) lead from the battery to terminal 2 and the negative (-) lead to terminal 1, and check that the mirror turns upward.

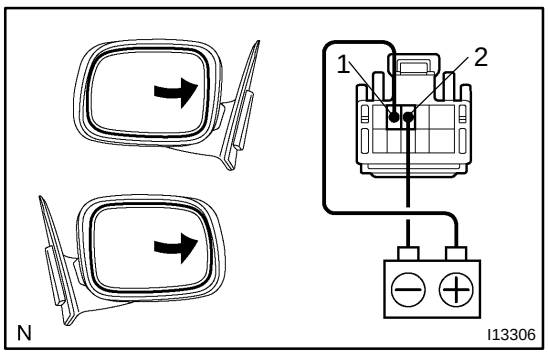

(d) Reverse the polarity, and check that the mirror turns downward.

If operation is not as specified, replace the mirror assembly.

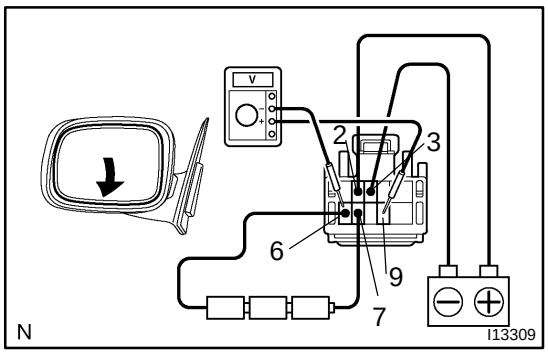

10. w/ Driving position memory:
INSPECT MIRROR POSITION SENSORS OPERATION

HINT:

Strip off the vinyl tape of the connector and remove terminals 2, 3, 6, 7 and 9 from the connector housing.

(a) Connect a series of three 1.5 V dry cell batteries.

(b) Connect the positive (+) lead from the dry cell batteries to terminal 7 and the negative (-) lead to terminal 6.

(c) Connect the positive (+) lead from the voltmeter to terminal 9 and the negative (-) lead to terminal 6.

(d) Apply Battery voltage to terminals 2 and 3, then check that the voltage gradually changes according to the table below while the mirror moves between the uppermost position and lowermost position.

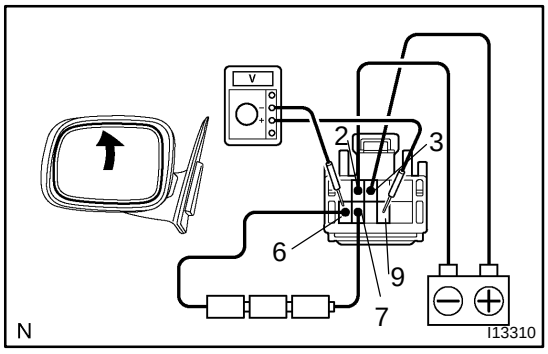

Mirror position	Lowermost	Mirror position	Uppermost
Voltage	2.8 - 5.0	Changes gradually	0 - 1.8

If voltage value is not as specified, replace the motor assembly.

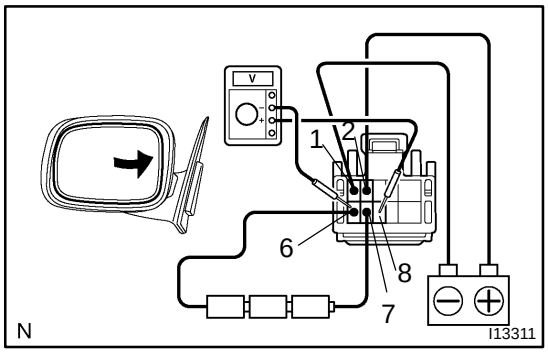

(e) Disconnect the 4 leads of the battery and voltmeter.

(f) Connect the positive (+) lead from the voltmeter to terminal 8 and negative (-) lead to terminal 6.

(g) Apply Battery voltage to terminals 2 and 1, then inspect that the voltage gradually changes according to the table below while the mirror moves between the left-most position and right-most position.

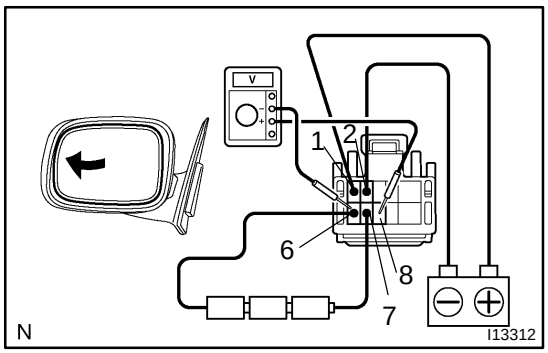

Mirror position	Left-most	Mirror position	Right-most
Voltage LEFT	2.8 - 5.0	Changes gradually	0 - 1.8
Voltage RIGHT	0 - 1.8	Changes gradually	2.8 -5.0

If voltage value is not as specified, replace the motor assembly.

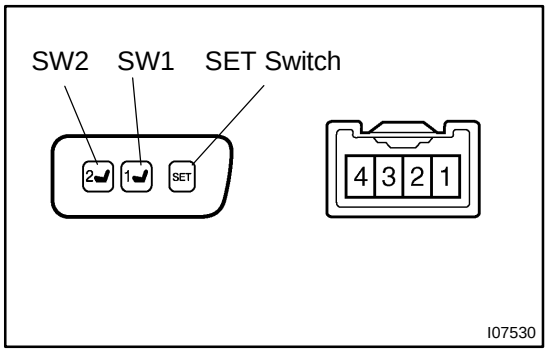

11. INSPECT DRIVING POSITION MEMORY AND RETURN SWITCH CONTINUITY

Switch position	Tester connection	Specified condition
SET switch ON	3 - 4	Continuity
Return SW1 ON	2 - 3	Continuity
Return SW2 ON	1 - 3	Continuity

If continuity is not as specified, replace the switch.

BE1E5-01

POWER MIRROR CONTROL SYSTEM

LOCATION

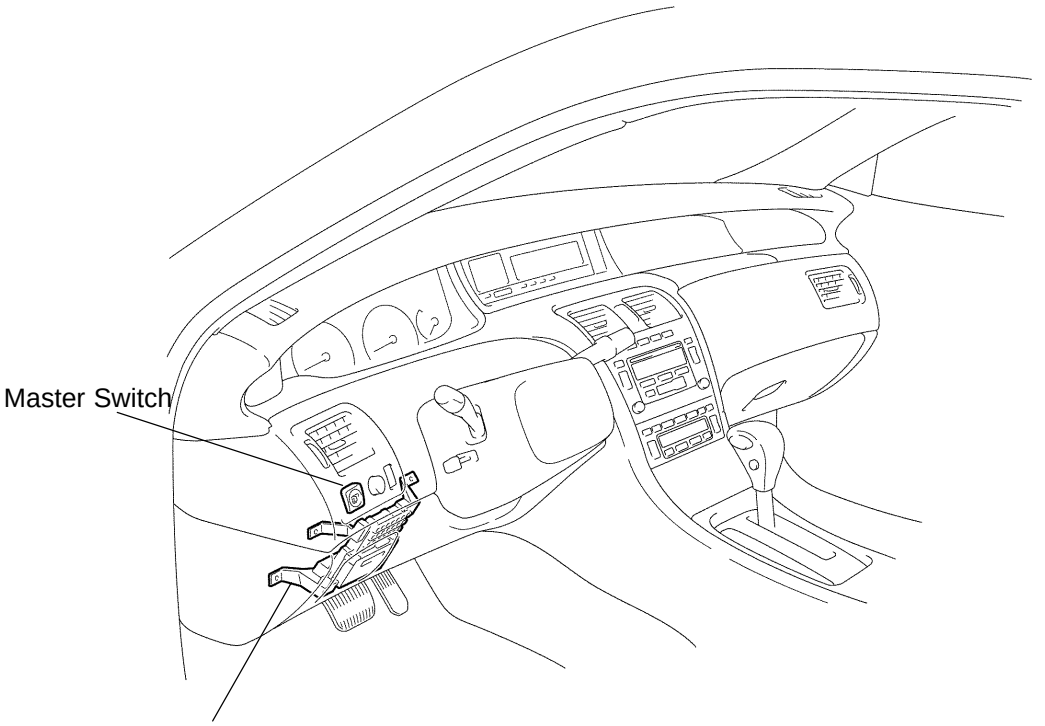

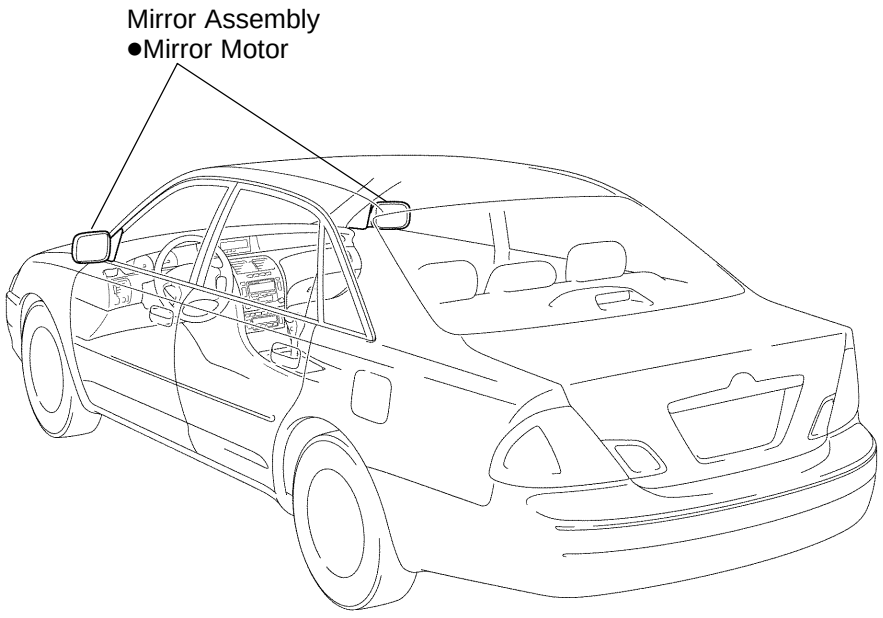

P

I12539

BE1DH-01

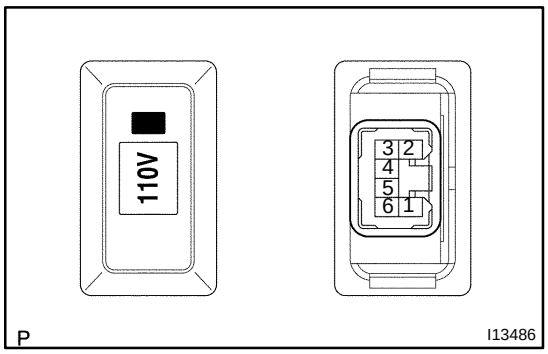

INSPECTION

INSPECT POWER OUTLET MAIN SWITCH CONTINUITY

Switch position	Tester connection	Specified condition
ON	2 - 3 - 6	continuity
OFF	-	No Continuity
illmination	1 - 5	Continuity

If continuity is not as specified, replace the switch.

BE1DG-01

POWER OUTLET

LOCATION

Floor shift vehicle:

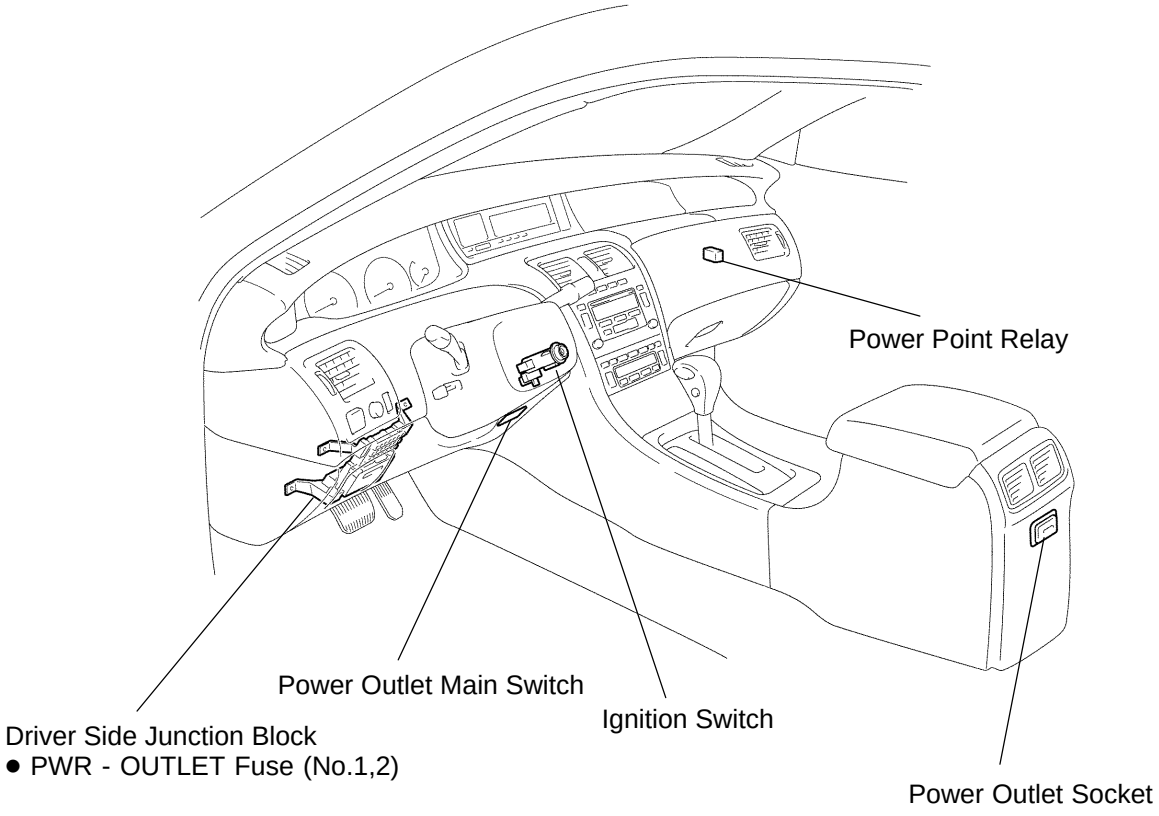

Column shift vehicle:

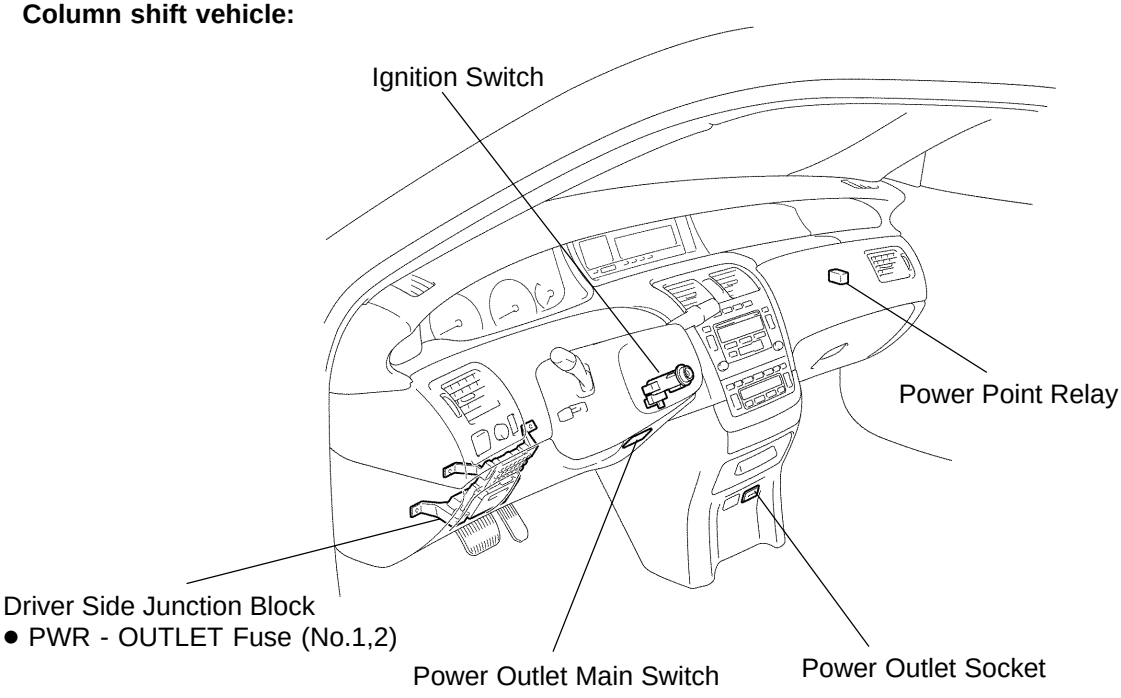

P

I13484

POWER SOURCE

LOCATION

BE1DF-01

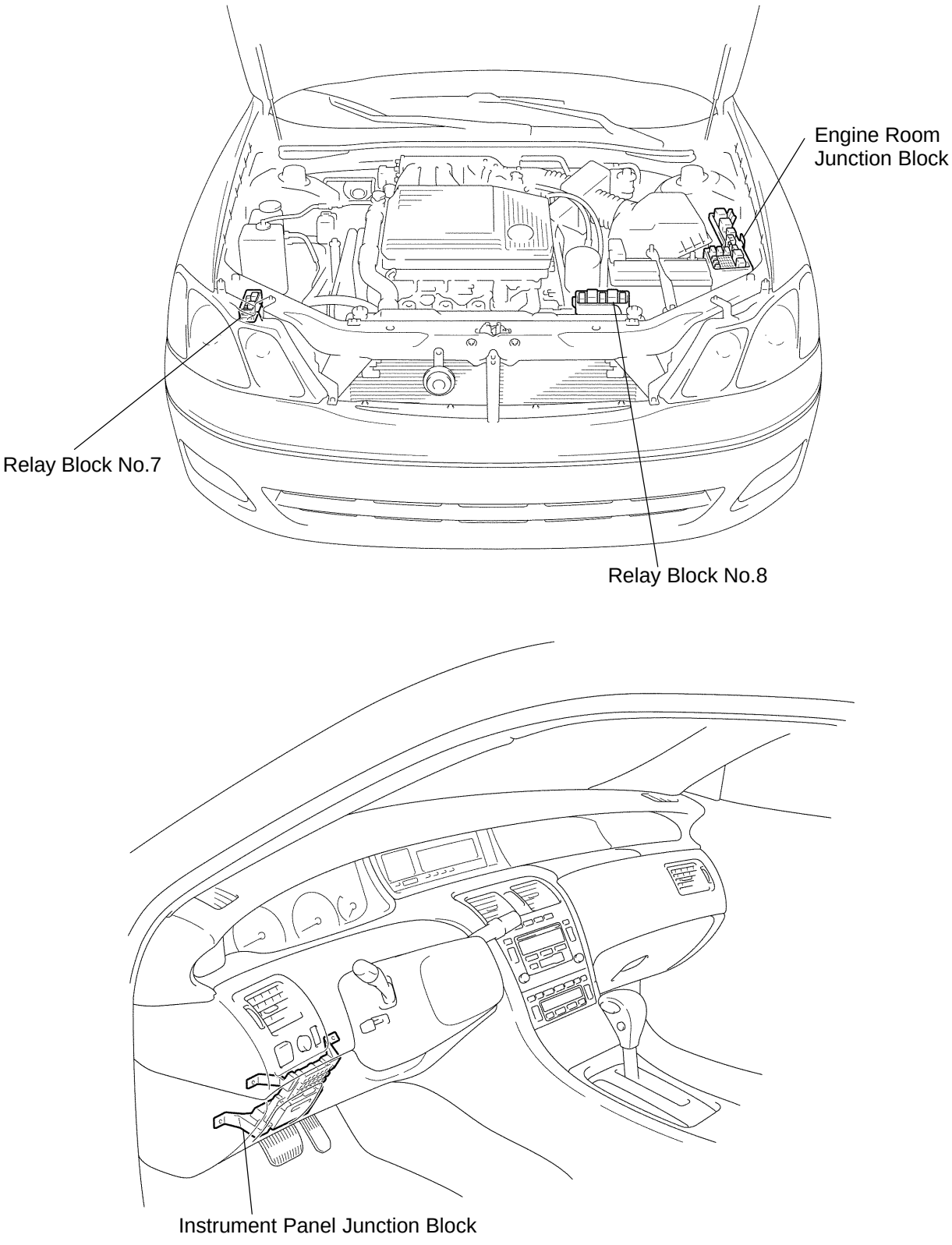

Engine Room Junction Block:

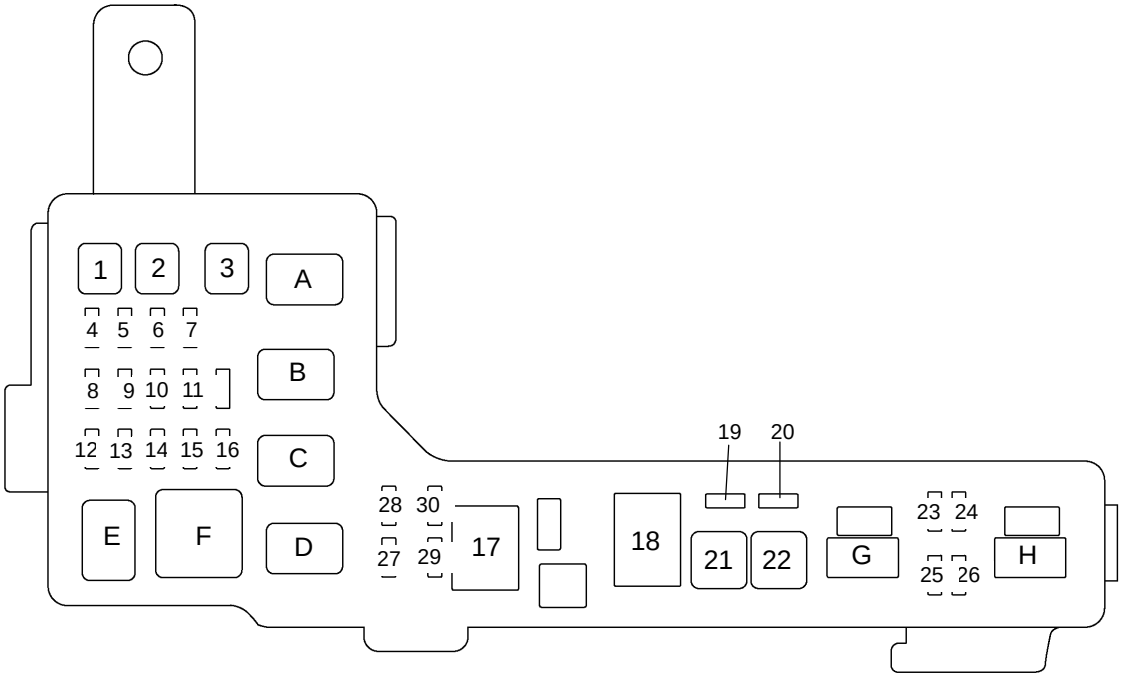

Fuses:

1. MAIN Fuse - 40 A
2. RDI Fuse - 30 A
3. CDS Fuse - 30 A
4. HAZ Fuse - 15 A
5. SRS WRN Fuse - 5 A
6. DCC 1 Fuse - 30 A
7. ALT-S Fuse - 5 A
8. AM2 Fuse - 10 A
9. HORN Fuse - 10 A
10. DOOR NO. 2 Fuse - 15 A
11. A/F Fuse - 25 A
12. IG2 Fuse - 15 A
13. EFI NO. 1 Fuse - 15 A
14. ABS NO. 2 Fuse - 25 A
15. ABS NO. 3 Fuse - 25 A
16. EFI NO. 2 Fuse - 7.5 A
17. ALT Fuse - 120 A
18. ABS Fuse - 60 A
19. DRL Fuse - 7.5 A
20. ABS NO. 4 Fuse - 5 A
21. HTR Fuse - 50 A
22. AM1 Fuse - 40 A
23. H-LP LH Fuse - 15 A *2
24. H-LP RH Fuse - 15 A *2
25. H-LP LH LWR Fuse - 15 A *1
26. H-LP RH LWR Fuse - 15 A *1
27. SPARE Fuse - 10 A
28. SPARE Fuse - 15 A
29. SPARE Fuse - 25 A
30. SPARE Fuse - 30 A

Relays:

A. MG/CLT Relay
B. A/F Relay
C. HORN Relay
D. EFI Relay
E. IG2 Relay
F. ST Relay
G. HEAD Relay
H. HTR Relay

*1: w/ Daytime Running Light
*2: w/o Daytime Running Light

Y

I12519

Driver Side Junction Block:

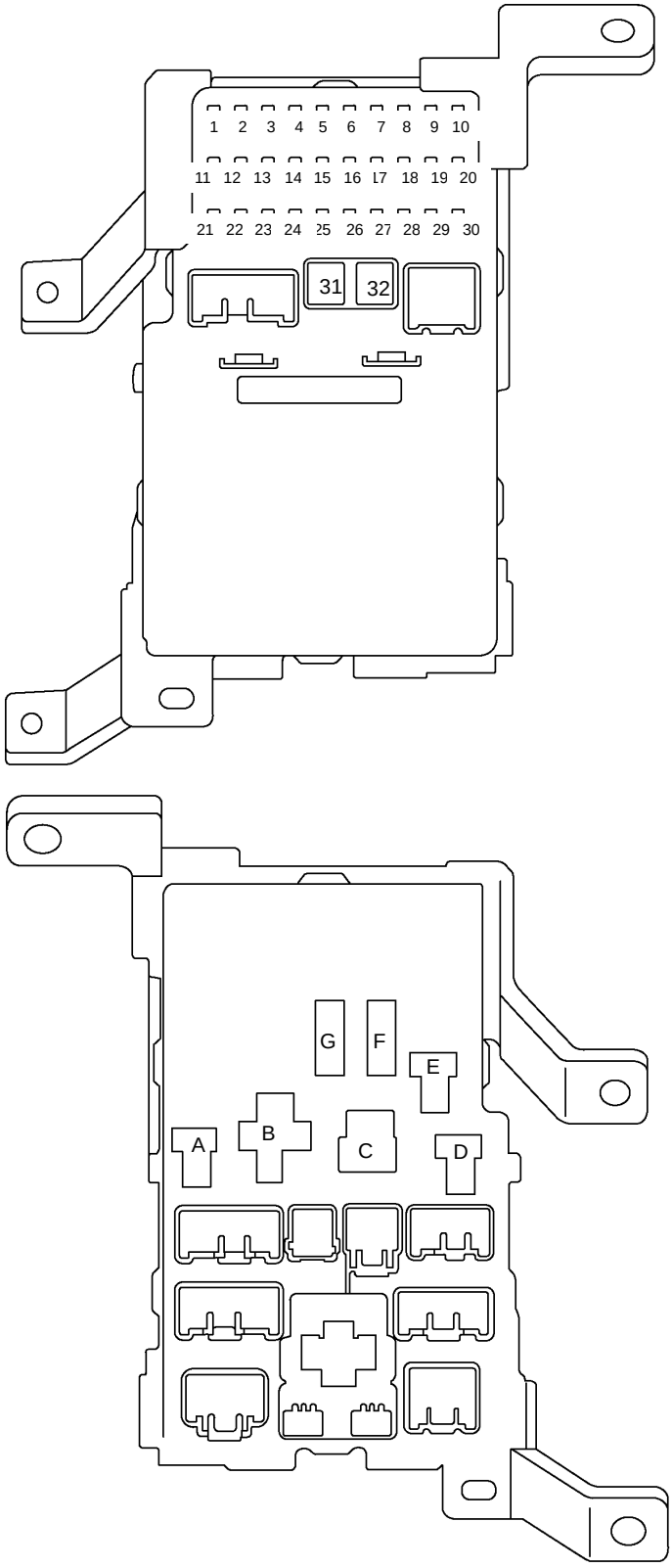

Fuses:

1. ECU-IG NO. 1 Fuse - 5 A
2. ECU-B NO. 2 Fuse - 7.5 A
3.TAIL Fuse - 10 A
4. SEAT HTR Fuse - 20 A
5. FR P/W Fuse - 20 A
6.GAUGE NO. 1 Fuse - 10 A
7. HTR Fuse - 10 A
8. FOG Fuse - 15 A
9. TURN Fuse - 7.5 A
10. A/C Fuse - 10 A
11. RADIO Fuse - 15 A
12. PANEL Fuse - 5 A
13.FL P/W Fuse - 25 A
14.PWR OUTLET NO. 1 Fuse - 15 A
15. ECU-ACC Fuse - 5 A
16. SRS ACC Fuse - 10 A
17. MIR HTR Fuse - 10 A
18. PWR OUTLET NO. 2 Fuse - 15 A
19. GAUGE NO. 2 Fuse - 10 A
20. OBDII Fuse - 7.5 A
21.STOP Fuse - 15 A
22.DOME Fuse - 7.5 A
23. OPNER Fuse - 5 A
24.RL P/W Fuse - 20 A
25.RR P/W Fuse - 20 A
26. WIP Fuse - 25 A
27.ECU-IG NO. 2 Fuse - 10 A
28.CIG Fuse - 15 A
29.DOOR NO. 1 Fuse - 25 A
30. SUN ROOF Fuse - 30 A
31. DEF Fuse - 40 A
32.PWR SEAT Fuse - 30 A

Relays:

A. FOG Relay
B. DEF Relay
C. IG1 Relay
D. TAIL Relay
E. PWR Relay

F. N/F-1
G.N/F-2

I12518

Relay Block No. 7: (w/ Day time running light)

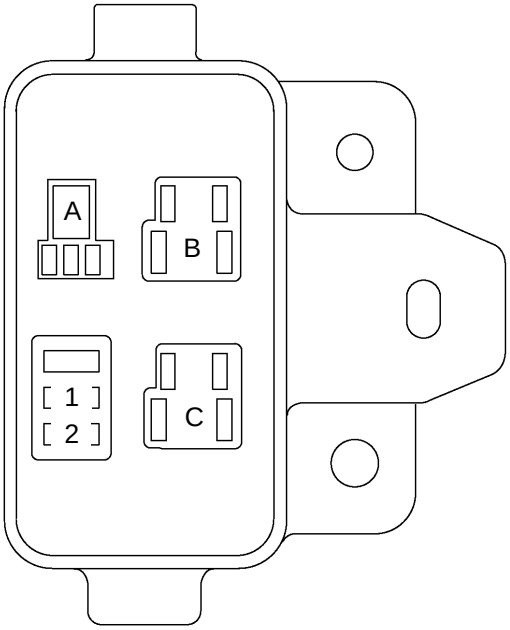

Fuses:

1.HEAD LH UPR Fuse - 10 A *1
2. HEAD RH UPR Fuse - 10 A *1

Relays:
A. DRL NO. 3 Relay *1
B. DRL NO. 4 Relay *1
C. DRL NO. 2 Relay *1

Relay Block No. 8:

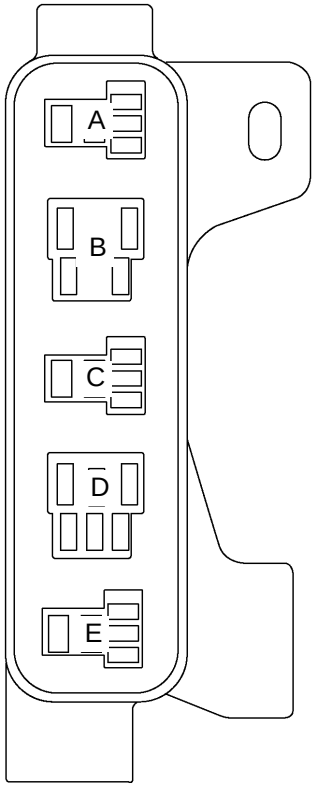

Relays:
A. FAN NO. 3 Relay
B. ABS-MTR Relay
C. FAN NO. 2 Relay
D. ABS-SOL Relay
E. FAN NO. 1 Relay

*1: w/ Daytime Running Light System

Y

I12520

BE0GL-04

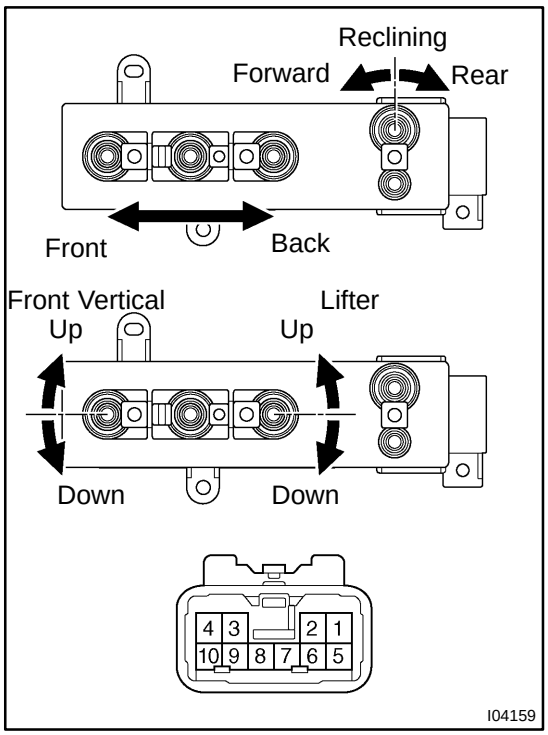

INSPECTION

1. INSPECT DRIVER'S POWER SEAT SWITCH CONTINUITY

Slide switch:

Switch position	Tester connection	Specified condition
FRONT	1 - 9 4 - 6	Continuity
OFF	4 - 6 4 - 9	Continuity
BACK	1 - 6 4 - 9	Continuity

Front vertical switch:

Switch position	Tester connection	Specified condition
UP	1 - 10 4 - 5	Continuity
OFF	4 - 5 4 - 10	Continuity
DOWN	1 - 5 4 - 10	Continuity

Lifter switch:

Switch position	Tester connection	Specified condition
UP	1 - 7 4 - 8	Continuity
OFF	4 - 7 4 - 8	Continuity
DOWN	1 - 8 4 - 7	Continuity

Reclining switch:

Switch position	Tester connection	Specified condition
FORWARD	1 - 3 2 - 4	Continuity
OFF	2 - 4 3 - 4	Continuity
REAR	1 - 2 3 - 4	Continuity

If continuity is not as specified, replace the switch.

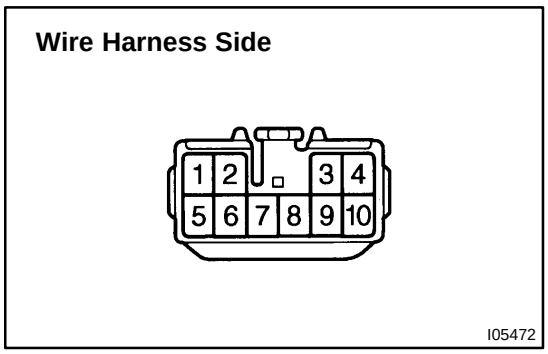

2. INSPECT DRIVER'S POWER SEAT SWITCH CIRCUIT

(a) Disconnect the switch connector and connect the seat wire harness to the floor wire harness.

(b) Inspect the connector on the wire harness side.

Tester connection	Condition	Specified condition
4 - Ground	Constant	Continuity
1 - Ground	Constant	Battery positive voltage

If circuit is not as specified, inspect the circuits connected to other parts.

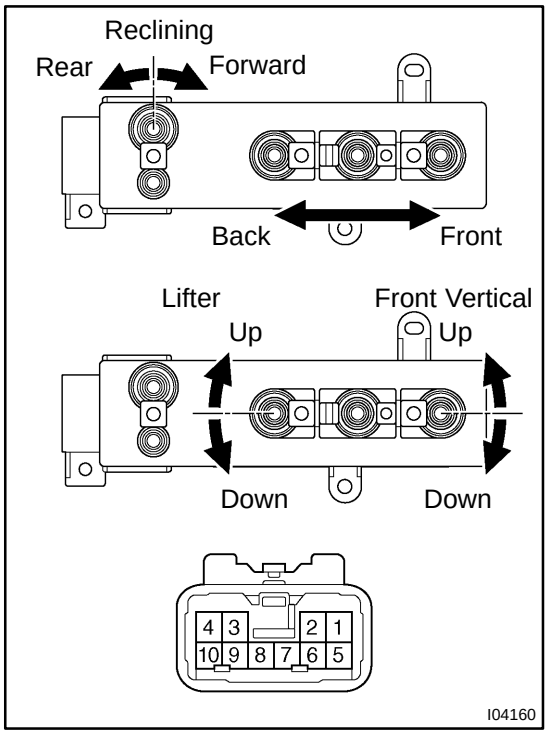

3. INSPECT PASSENGER'S POWER SEAT SWITCH CONTINUITY

Slide switch:

Switch position	Tester connection	Specified condition
FRONT	1 - 9 4 - 6	Continuity
OFF	4 - 6 4 - 9	Continuity
BACK	1 - 6 4 - 9	Continuity

Front vertical switch:

Switch position	Tester connection	Specified condition
UP	1 - 5 4 - 10	Continuity
OFF	4 - 5 4 - 10	Continuity
DOWN	1 - 10 4 - 5	Continuity

Lifter switch:

Switch position	Tester connection	Specified condition
UP	1 - 8 4 - 7	Continuity
OFF	4 - 7 4 - 8	Continuity
DOWN	1 - 7 4 - 8	Continuity

Reclining switch:

Switch position	Tester connection	Specified condition
FORWARD	1 - 3 2 - 4	Continuity
OFF	2 - 4 3 - 4	Continuity
REAR	1 - 2 3 - 4	Continuity

If continuity is not as specified, replace the switch.

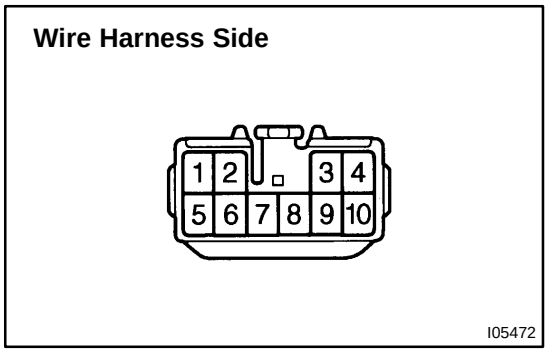

4. INSPECT PASSENGER'S POWER SEAT SWITCH CIRCUIT

(a) Disconnect the switch connector and connect the seat wire harness to the floor wire harness.

(b) Inspect the connector on the wire harness side.

Tester connection	Condition	Specified condition
4 - Ground	Constant	Continuity
1 - Ground	Constant	Battery positive voltage

If circuit is not as specified, inspect the circuits connected to other parts.

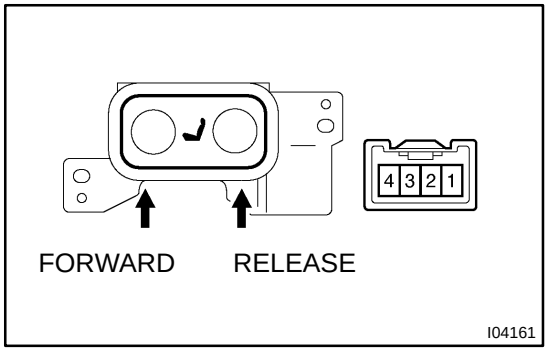

5. INSPECT DRIVER'S LUMBAR SUPPORT SWITCH CONTINUITY

Switch position	Tester connection	Specified condition
FORWARD	1 - 4 2 - 3	Continuity
OFF	1 - 3 2 - 3	Continuity
RELEASE	1 - 3 2 - 4	Continuity

If continuity is not as specified, replace the switch.

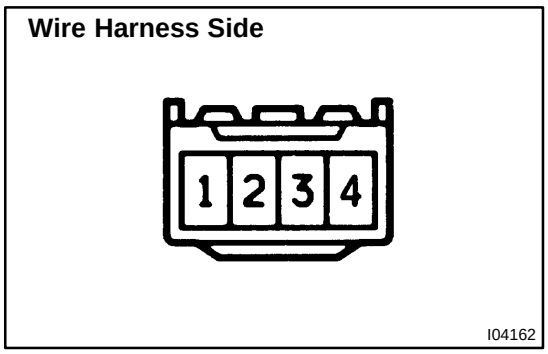

6. INSPECT DRIVER'S LUMBAR SUPPORT SWITCH CIRCUIT

(a) Disconnect the switch connector and connect the seat wire harness to the floor wire harness.

(b) Inspect the connector on the wire harness side.

Tester connection	Condition	Specified condition
3 - Ground	Constant	Continuity
4 - Ground	Constant	Battery positive voltage

If circuit is not as specified, inspect the circuits connected to other parts.

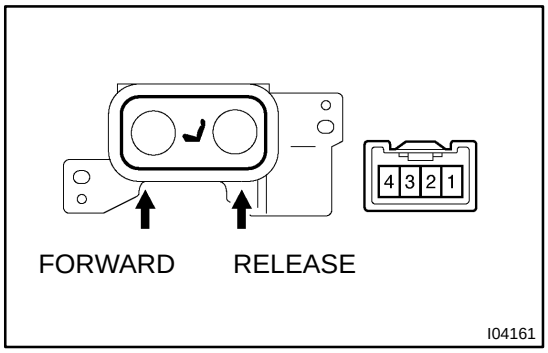

7. INSPECT PASSENGER'S LUMBAR SUPPORT SWITCH CONTINUITY

Switch position	Tester connection	Specified condition
FORWARD	1 - 4 2 - 3	Continuity
OFF	1 - 3 2 - 3	Continuity
RELEASE	1 - 3 2 - 4	Continuity

If continuity is not as specified, replace the switch.

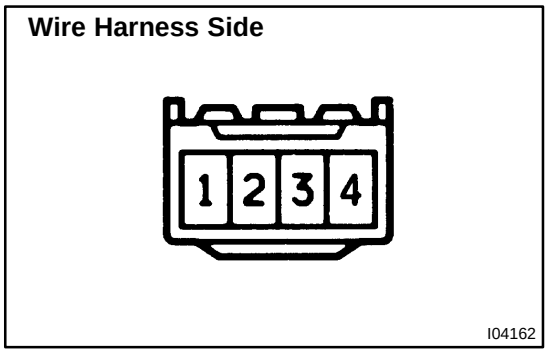

8. INSPECT PASSENGER'S LUMBAR SUPPORT SWITCH CIRCUIT

(a) Disconnect the switch connector and connect the seat wire harness to the floor wire harness.

(b) Inspect the connector on the wire harness side.

Tester connection	Condition	Specified condition
2 - Ground	Constant	Continuity
1 - Ground	Constant	Battery positive voltage

If circuit is not as specified, inspect the circuits connected to other parts.

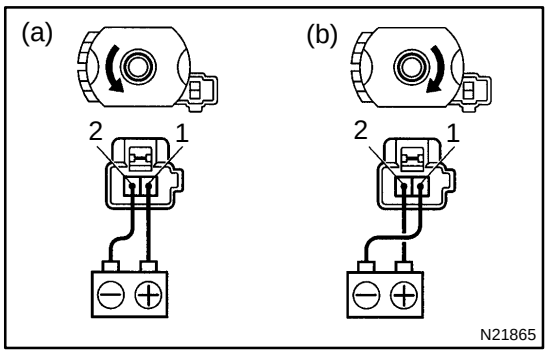

9. INSPECT SLIDE MOTOR OPERATION

(a) Connect the positive (+) lead from the battery to terminal 1 and the negative (-) lead to terminal 2, check that the motor turns counterclockwise.

(b) Reverse the polarity, check that the motor turns clockwise.

If operation is not as specified, replace the seat adjuster.

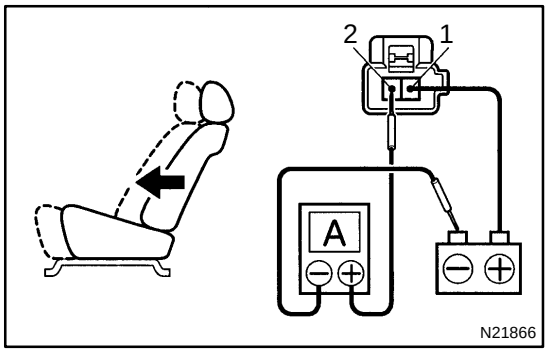

10. INSPECT SLIDE MOTOR PTC THERMISTOR OPERATION

( ): Passenger side

(a) Connect the positive (+) lead from the battery to terminal 1 (2), the positive (+) lead from the ammeter to terminal 2 (1) and the negative (-) lead to the battery negative (-) terminal, then move the seat cushion to the front position.

(b) Continue to apply voltage, check that current changes to less than 1 ampere within 4 to 90 seconds.

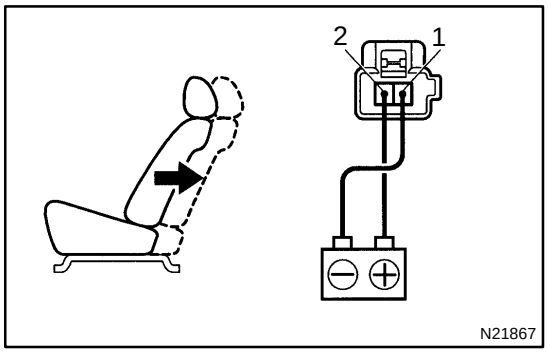

(c) Disconnect the leads from terminals.

(d) Approximately 60 seconds later, connect the positive (+) lead from the battery to terminal 2 (1) and the negative (-) lead to terminal 1 (2), check that the seat cushion begins to move backwards.

If operation is not as specified, replace the seat adjuster.

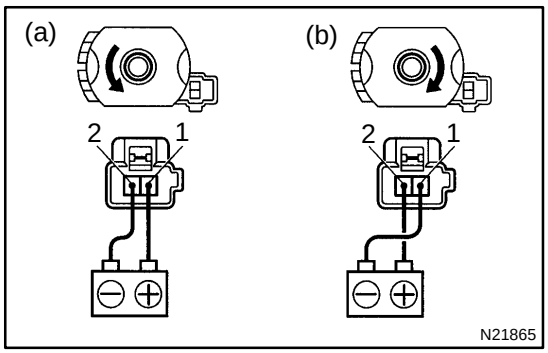

11. INSPECT FRONT VERTICAL MOTOR OPERATION

(a) Connect the positive (+) lead from the battery to terminal 1 and the negative (-) lead to terminal 2, check that the motor turns counterclockwise.

(b) Reverse the polarity, check that the motor turns clockwise.

If operation is not as specified, replace the seat adjuster.

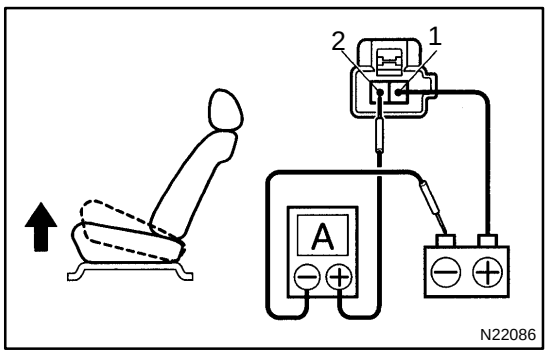

12. INSPECT FRONT VERTICAL MOTOR PTC THERMISTOR OPERATION

( ): Passenger side

(a) Connect the positive (+) lead from the battery to terminal 1 (2), the positive (+) lead from the ammeter to terminal 2 (1) and the negative (-) lead to the battery negative (-) terminal, then move the seat cushion to the highest position.

(b) Continue to apply voltage, check that the current changes to less than 1 ampere within 4 to 90 seconds.

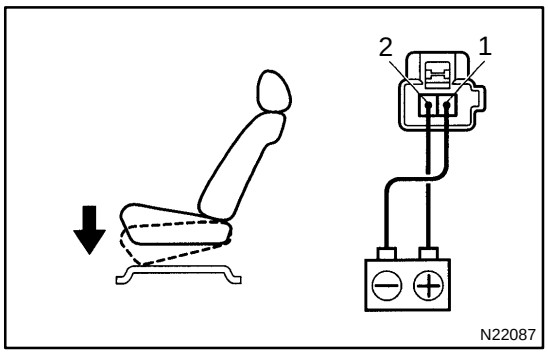

(c) Disconnect the leads from the terminals.
(d) Approximately 60 seconds later, connect the positive (+) lead from the battery to terminal 2 (1) and the negative (-) lead to terminal 1 (2), check that the seat cushion begins to descend.

If operation is not as specified, replace the seat adjuster.

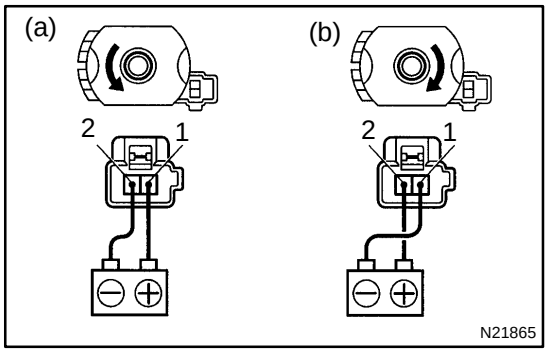

13. INSPECT REAR VERTICAL MOTOR OPERATION

(a) Connect the positive (+) lead from the battery to terminal 1 and the negative (-) lead to terminal 2, check that the motor turns counterclockwise.
(b) Reverse the polarity, check that the motor turns clockwise.

If operation is not as specified, replace the seat adjuster.

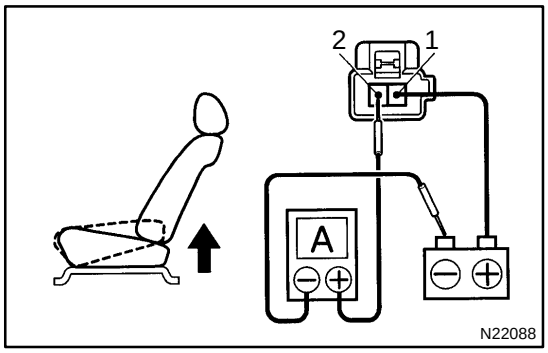

14. INSPECT REAR VERTICAL MOTOR PTC THERMISTOR OPERATION

(a) Connect the positive (+) lead from the battery to terminal 2 (1), the positive (+) lead from the ammeter to terminal 1 (2) and the negative (-) lead to the battery negative (-) terminal, then move the seat cushion to the highest position.
(b) Continue to apply voltage, check that the current changes to less than 1 ampere within 4 to 90 seconds.

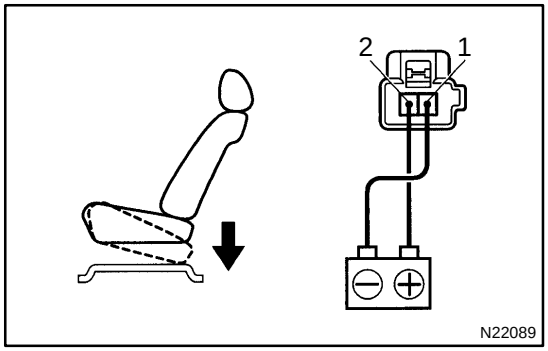

(c) Disconnect the leads from the terminals.
(d) Approximately 60 seconds later, connect the positive (+) lead from the battery to terminal 1 (2) and the negative (-) lead to terminal 2 (1), check that the seat cushion begins to descend.

If operation is not as specified, replace the seat adjuster.

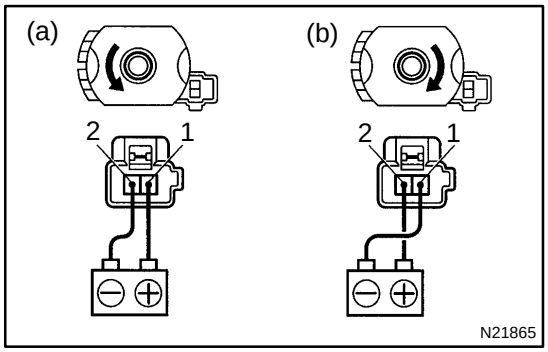

15. INSPECT RECLINING MOTOR OPERATION

(a) Connect the positive (+) lead from the battery to terminal 1 and the negative (-) lead to terminal 2, check that the motor turns counterclockwise.
(b) Reverse the polarity, check that the motor turns clockwise.

If operation is not as specified, replace the seat adjuster.

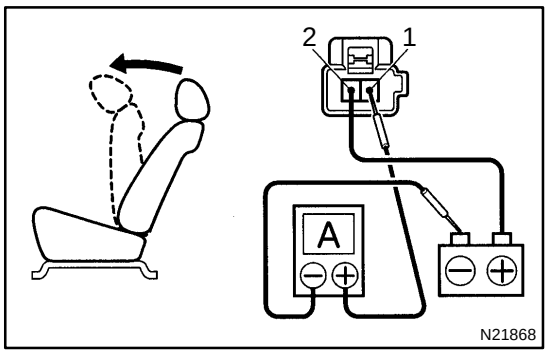

16. INSPECT RECLINING MOTOR PTC THERMISTOR OPERATION

(a) Connect the positive (+) lead from the battery to terminal 2, the positive (+) lead from the ammeter to terminal 1 and the negative (-) lead to the battery negative (-) terminal, then recline the seat back to the most forward position.

(b) Continue to apply voltage, check that the current changes to less than 1 ampere within 4 to 90 seconds.

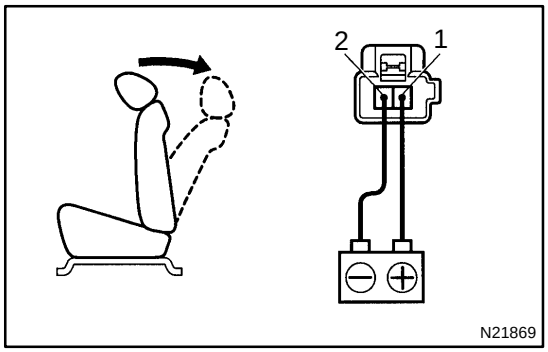

(c) Disconnect the leads from the terminals.

(d) Approximately 60 seconds later, connect the positive (+) lead from the battery to terminal 1 and the negative (-) lead to terminal 2, check that the seat back begins to fall backward.

If operation is not as specified, replace the seat adjuster.

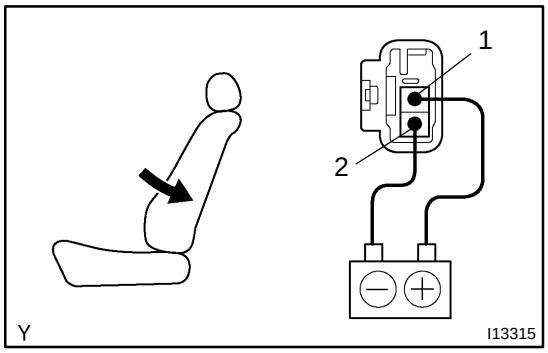

17. INSPECT LUMBAR SUPPORT MOTOR OPERATION

(a) Connect the positive (+) lead from the battery to terminal 1 and the negative (-) lead to terminal 2, check that the lumbar support moves to release side.

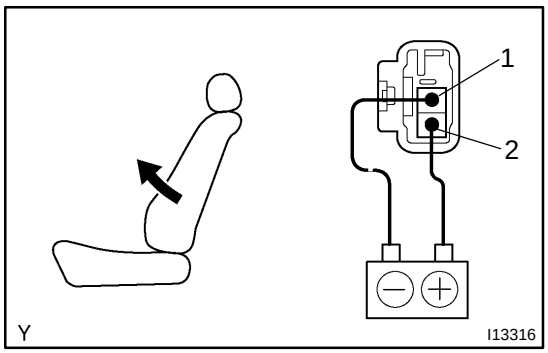

(b) Reverse the polarity, check that the lumbar support moves forward.

If operation is not as specified, replace the seat adjuster.

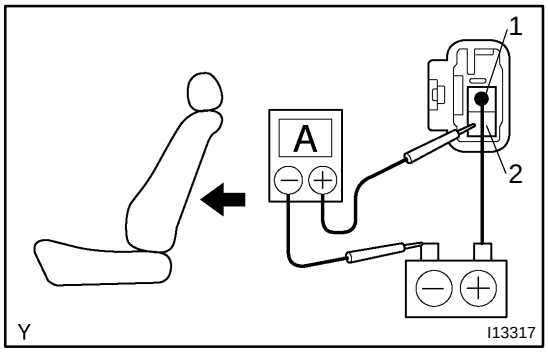

18. INSPECT LUMBAR SUPPORT MOTOR CIRCUIT BREAKER OPERATION

(a) Connect the positive (+) lead from the battery to terminal 2 and the negative (-) lead to terminal 1 on the lumbar support motor connector and move the lumbar support to front end position.

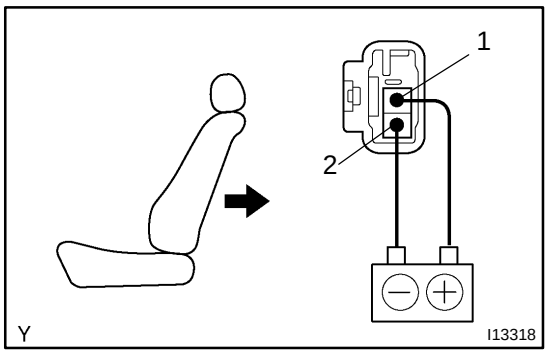

(b) Continue to apply voltage, check that a circuit breaker operation noise can be heard within 4 to 60 seconds.

(c) Reverse the polarity, check that the lumbar support begins to move release side with in spproximately 60 seconds.

If operation is not as specified, replace the motor.

POWER SEAT CONTROL SYSTEM (w/o Driving Position Memory)

LOCATION

BE0IR-03

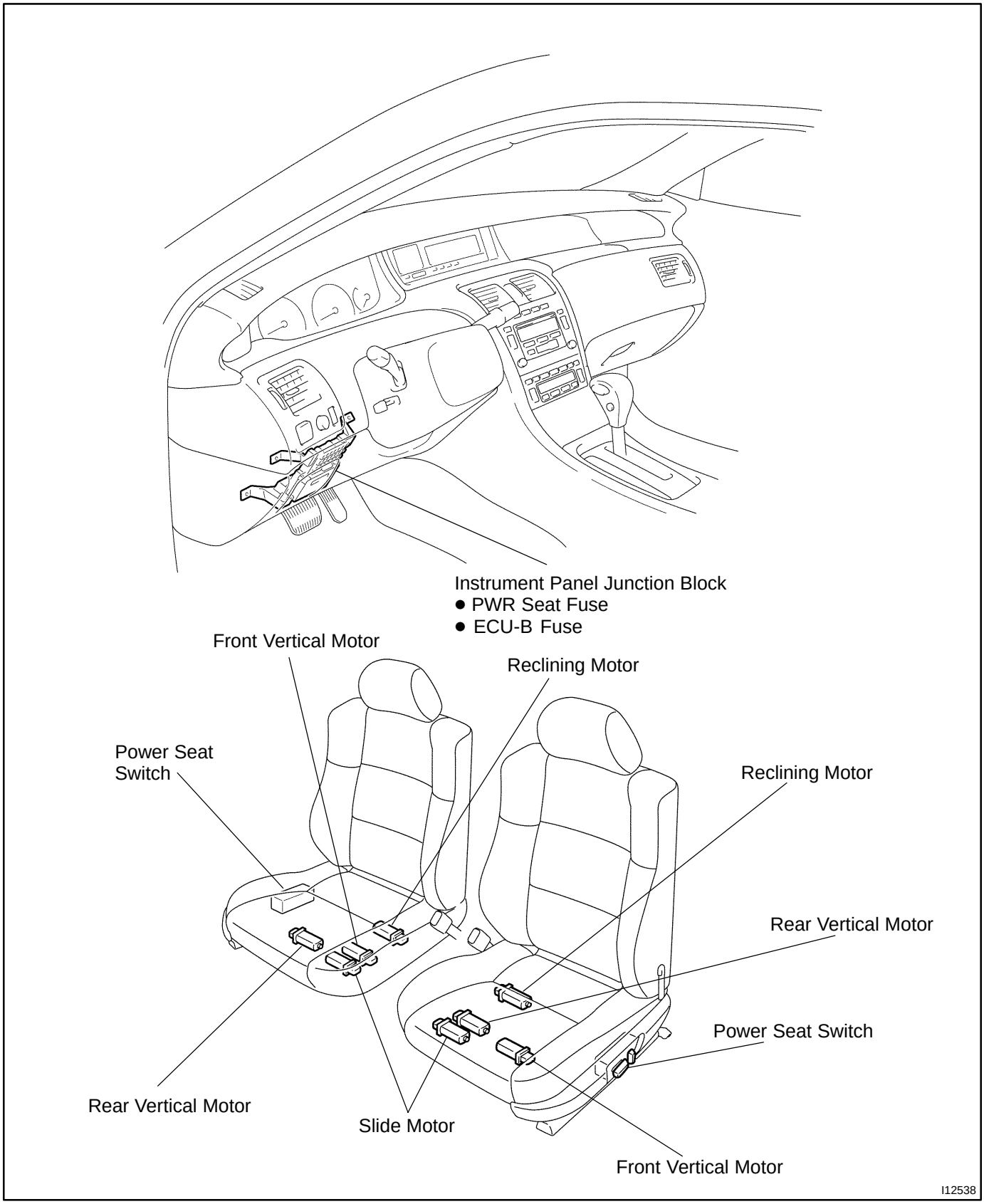

BE0HG-33

ADJUSTMENT

HOW TO RESET POWER WINDOW MOTOR (LIMIT SWITCH)

NOTICE:

If the jam protection function is not functioning properly, perform the following procedures.

HINT:

It is necessary to reset the power window motor (in initial position for the limit switch) when separating the window regulator from the power window motor or operating the window regulator with the door glass not installed.

(a) Remove the power window motor.

HINT:

Place matchmarks on the power window motor and window regulator gear.

(b) Connect the power window motor and power window switch to the wire harness of the vehicle.

(c) Turn the ignition switch ON.

(d) Press the power window UP switch until the motor completes 6 to 10 rotations (4 seconds of rotation or more).

(e) Assemble the power window motor and regulator.

HINT:

- Install the motor when the regulator arm is below the middle point.
- Align the matchmarks on the power window motor and window regulator gear when installing the power window motor.

(f) Assemble the power window regulator and door glass.

HINT:

Never rotate the motor downward until the completion of the window glass installation.

(g) Connect the power window switch to the wire harness and turn the ignition switch ON.

(h) Repeat UP and DOWN operation several times manually.

(i) Check AUTO UP → AUTO DOWN automatic operation is normal.

NOTICE:

- **The jam protection function does not operate immediately after performing reset.**
- **If the jam protection function is triggered and the window lowers after the window has been fully closed by AUTO UP operation (step i), reset the power window motor again.**

(j) Check the power window function.

BE1DW-01

INSPECTION

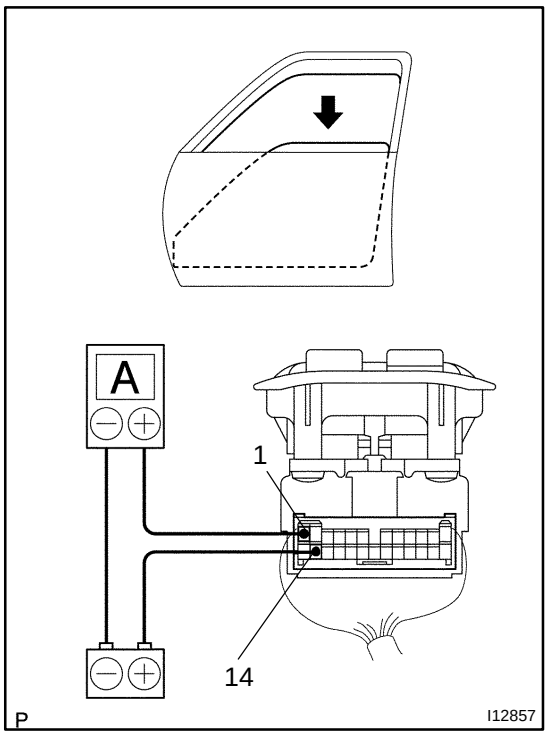

1. Using an ammeter:
INSPECT ONE TOUCH POWER WINDOW SYSTEM/ CURRENT OF CIRCUIT

(a) Disconnect the connector from the master switch.
(b) Connect the positive (+) lead from the ammeter to terminal 1 on the wire harness side connector and the negative (-) lead to negative (-) terminal of the battery.
(c) Connect the positive (+) lead from the battery to terminal 14 on the wire harness side connector.
(d) As the window goes down, check that the current flow is approximately 7 A.
(e) Check that the current increases up to approximately 14.5 A or more when the window stops going down.

HINT:
The PTC opens some 4 - 90 seconds after the window stops going down, so that check must be made before the PTC operates.
If the operation is as specified, replace the driver door ECU.

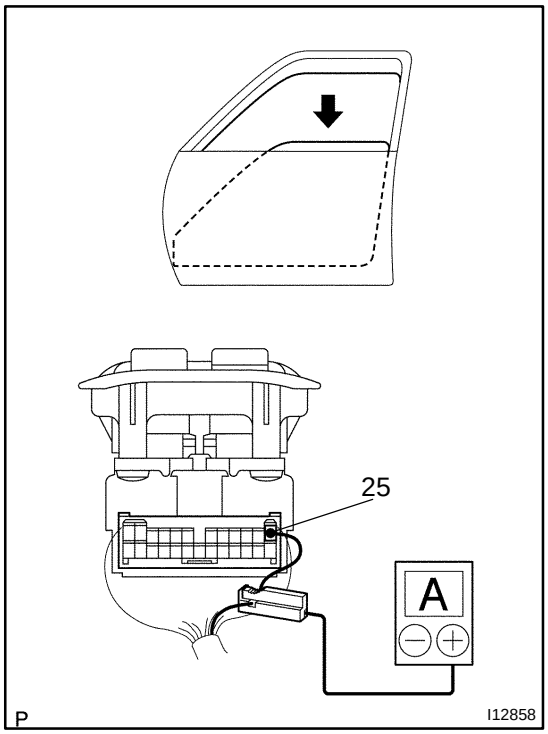

2. Using an ammeter with a current-measuring probe:
INSPECT ONE TOUCH POWER WINDOW SYSTEM/ CURRENT OF CIRCUIT

(a) Remove the driver door ECU with connectors connected.
(b) Attach a current-measuring probe to terminal 25 of the wire harness.
(c) Turn the ignition switch ON and set the power window switch in the down position.
(d) As the window goes down, check that the current flow is approximately 7 A.
(e) Check that the current increases up to approximately 14.5 A or more when the window stops going down.

HINT:
The PTC opens some 4 - 90 seconds after the window stops going down, so that check must be made before the PTC operates.
If operation is as specified, replace the driver door ECU.

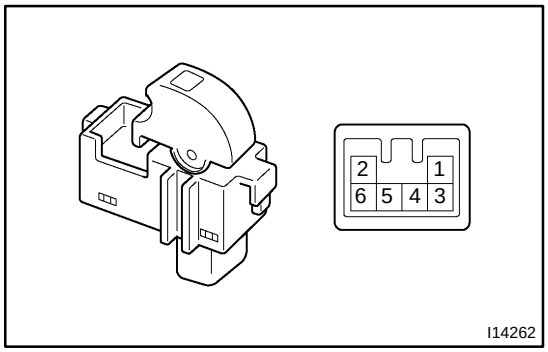

3. INSPECT REAR POWER WINDOW SWITCH CONTINUITY

Switch position	Tester connection	Specified condition
UP	5 - 4, 2 - 6	Continuity
OFF	4 - 6, 2 - 6	No continuity
DOWN	2 - 5, 4 - 6	Continuity

If continuity is not as specified, replace the switch.

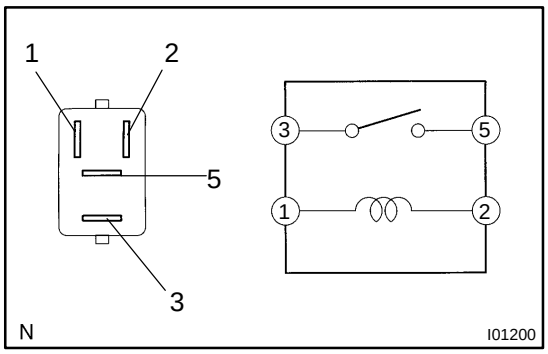

4. INSPECT POWER MAIN RELAY CONTINUITY

Condition	Tester connection	Specified condition
Constant	1 - 2	Continuity
Apply B+ between terminals 1 and 2.	3 - 5	Continuity

If continuity is not as specified, replace the relay.

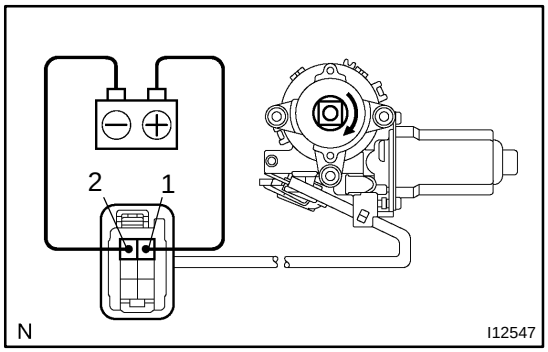

5. Driver's Door: INSPECT POWER WINDOW MOTOR OPERATION

(a) Connect the positive (+) lead from the battery to terminal 1 and the negative (-) lead to terminal 2, and check that the motor turns clockwise.

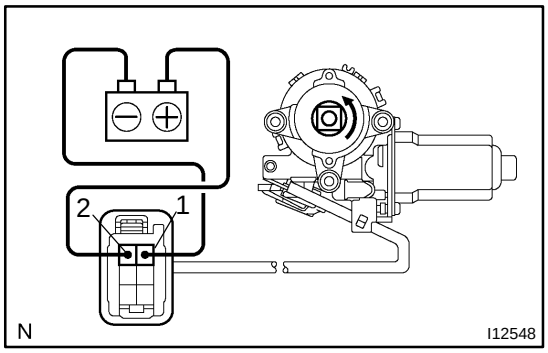

(b) Reverse the polarity, check that the motor turns counter-clockwise.

If operation is not as specified, replace the motor.

NOTICE:

Since the jam protection may not work properly be sure to conduct procedures described in "HOW TO RESET POWER MOTOR (RESET AND PULSE SWITCH)" after this inspection.

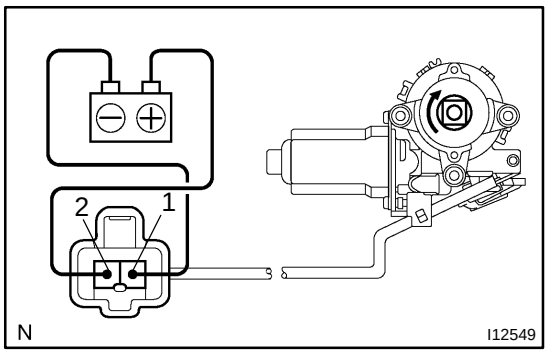

6. Front Passenger's Door: INSPECT POWER WINDOW MOTOR OPERATION

(a) Connect the positive (+) lead from the battery to terminal 2 and the negative (-) lead to terminal 1, and check that the motor turns clockwise.

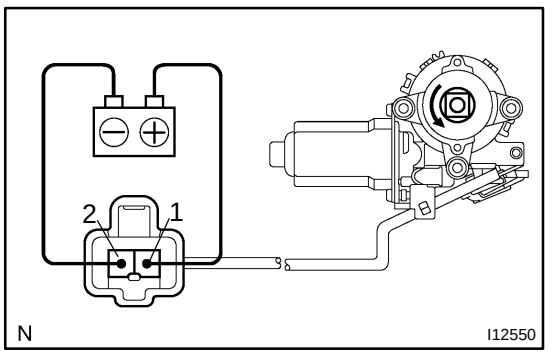

(b) Reverse the polarity, check that the motor turns counter-clockwise.

If operation is not as specified, replace the motor.

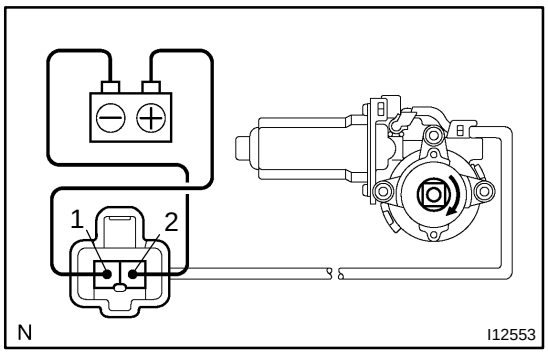

7. Rear Left Side Door:
INSPECT POWER WINDOW MOTOR OPERATION

(a) Connect the positive (+) lead from the battery to terminal 2 and the negative (-) lead to terminal 1, and check that the motor turns clockwise.

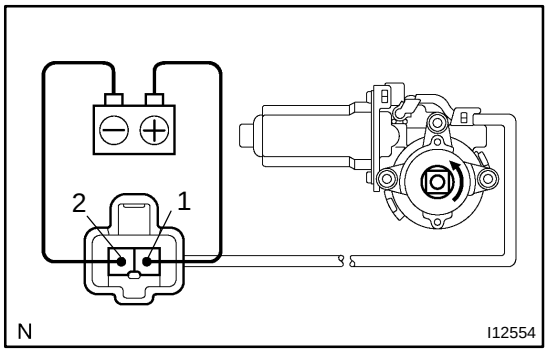

(b) Reverse the polarity, check that the motor turns counter-clockwise.

If operation is not as specified, replace the motor.

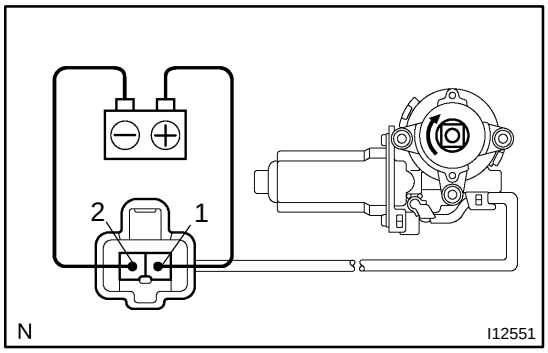

8. Rear Right Side Door:
INSPECT POWER WINDOW MOTOR OPERATION

(a) Connect the positive (+) lead from the battery to terminal 1 and the negative (-) lead to terminal 2, and check that the motor turns clockwise.

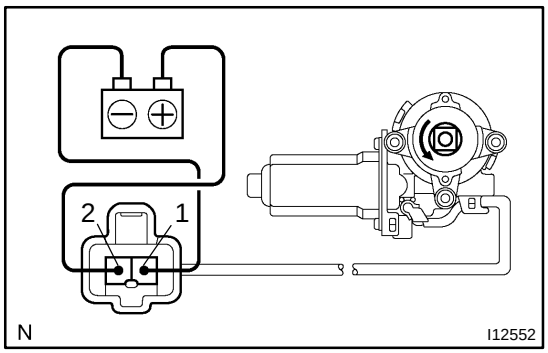

(b) Reverse the polarity, check that the motor turns counter-clockwise.

If operation is not as specified, replace the motor.

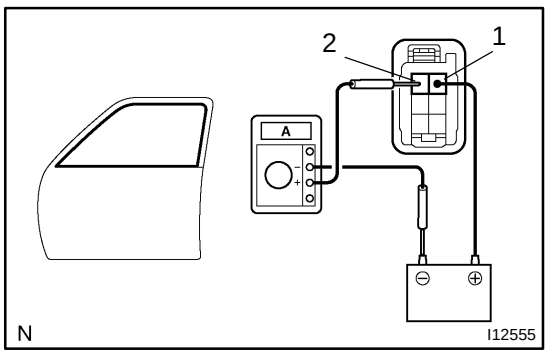

9. Driver's door:
INSPECT POWER WINDOW MOTOR PTC THERMISTOR OPERATION

(a) Disconnect the connector from the power window motor.

(b) Connect the positive (+) lead from the ammeter to terminal 2 on the wire harness side connector and the negative (-) lead to negative terminal of the battery.

(c) Connect the positive (+) lead from the battery to terminal 1 on the wire harness side connector, and raise the window to the fully position.

(d) Continue to apply voltage, and check that the current changes to less than 1 A with 4 to 90 seconds.

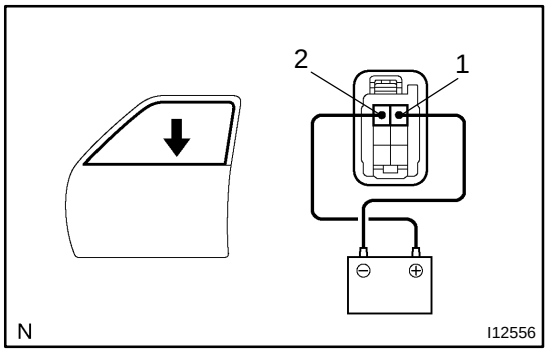

(e) Disconnect the leads from terminals.
(f) Approximately 60 seconds later, connect the positive (+) lead from the battery to terminal 2 and negative (-) lead to terminal 1, and check that the window begins to descended.

If operation is not as specified, replace the motor.

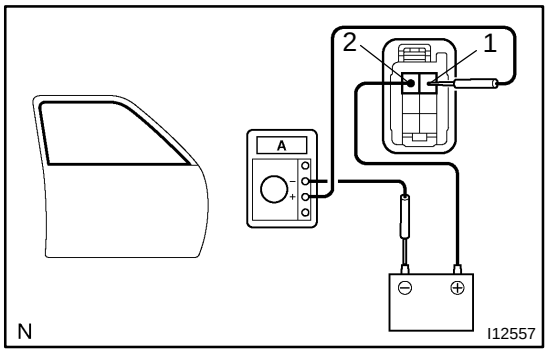

10. Front Passenger's door:
INSPECT POWER WINDOW MOTOR PTC THERMISTOR OPERATION

(a) Disconnect the connector from the power window motor.
(b) Connect the positive (+) lead from the ammeter to terminal 1 on the wire harness side connector and the negative (-) lead to negative terminal of the battery.
(c) Connect the positive (+) lead from the battery to terminal 2 on the wire harness side connector, and raise the window to the fully position.

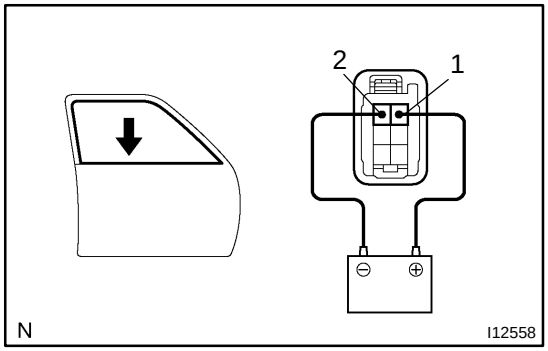

(d) Continue to apply voltage and check that the current changes to less than 1 A within 4 to 90 seconds.
(e) Disconnect the leads from the terminals.
(f) Approximately 60 seconds later, connect the positive (+) lead from the battery to terminal 1 and the negative (-) lead to terminal 2, and check that the window begins to descend.

If operation is not as specified, replace the motor.

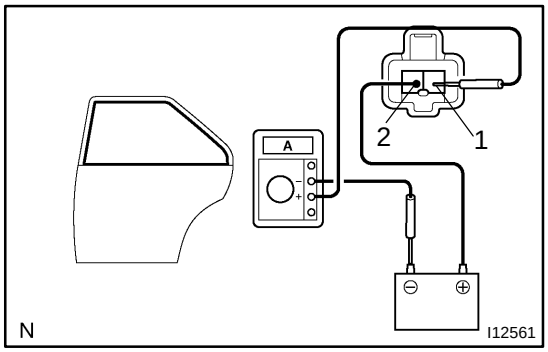

11. Rear LH door:
INSPECT POWER WINDOW MOTOR PTC THERMISTOR OPERATION

(a) Disconnect the connector from the power window motor.
(b) Connect the positive (+) lead from the ammeter to terminal 2 on the wire harness side connector and the negative (-) lead to negative terminal of the battery.
(c) Connect the positive (+) lead from the battery to terminal 2 on the wire harness side connector, and raise the window to the fully position.

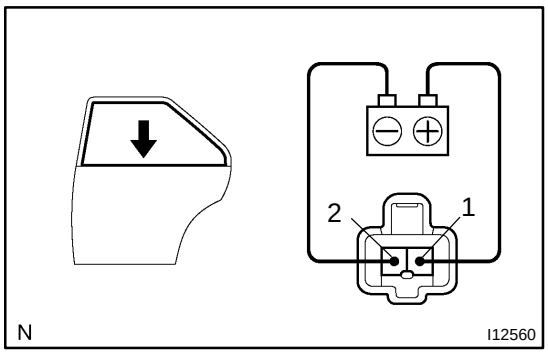

(d) Continue to apply voltage and check that the current changes to less than 1 A within 4 to 90 seconds.
(e) Disconnect the leads from the terminals.
(f) Approximately 60 seconds later, connect the positive (+) lead from the battery to terminal 1 and the negative (-) lead to terminal 2, and check that the window begins to descend.

If operation is not as specified, replace the motor.

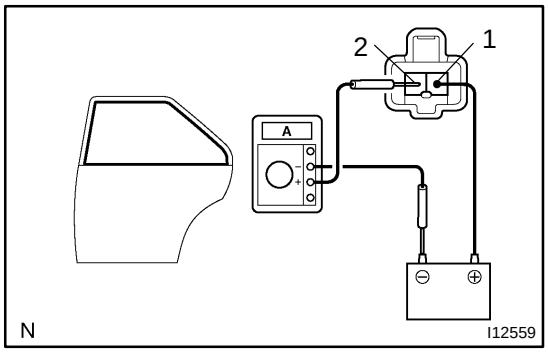

12. Rear RH Door:
INSPECT POWER WINDOW MOTOR PTC THERMISTOR OPERATION

(a) Disconnect the connector from the power window motor.
(b) Connect the positive (+) lead from the ammeter to terminal 2 on the wire harness side connector and the negative (-) lead to negative terminal of the battery.
(c) Connect the positive (+) lead from the battery to terminal 1 on the wire harness side connector, and raise the window to the fully position.

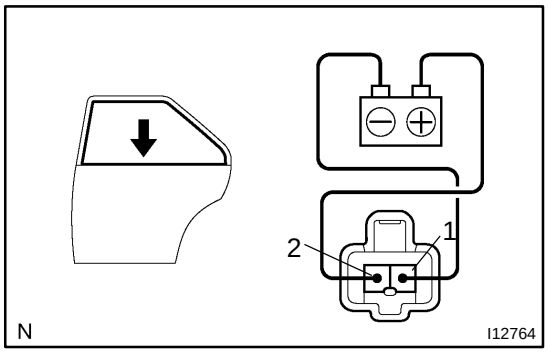

(d) Continue to apply voltage and check that the current changes to less than 1 A within 4 to 90 seconds.
(e) Disconnect the leads from the terminals.
(f) Approximately 60 seconds later, connect the positive (+) lead from the battery to terminal 2 and the negative (-) lead to terminal 1, and check that the window begins to descend.

If operation is not as specified, replace the motor.

13. INSPECT JAM PROTECTION FUNCTION

NOTICE:

Never, ever be caught any part of your body when checking.

HINT:

In case of performing resetting of the limit switch, do checking after repeating up and down of the glass with automatic operation.

(a) Confirmation of AUTO up operation:
Confirm that the window will be fully close with AUTO up operation.
(b) Checking of the operation of the jam protection function:
(1) Move up the window with AUTO up operation and check that the window will go down when it touches the handle of the hammer stetted.
(2) Confirm that the window will then stop going down about 200 mm .

HINT:

In case of removing the glass, glass guide, regulator and etc. be sure to perform checking of the jam protection function.

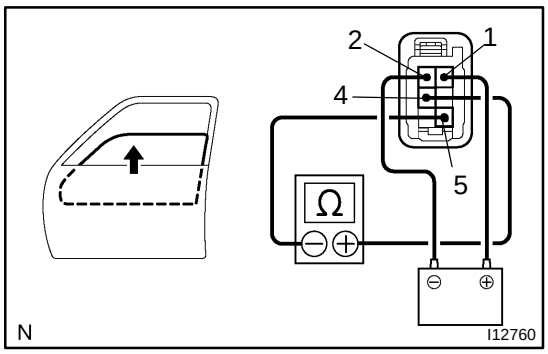

14. Driver's Door (Window Up):
INSPECT JAM PROTECTION LIMIT SWITCH OPERATION

(a) Connect the negative (-) lead from the ohmmeter to terminal 5 and the positive (+) lead to terminal 4.
(b) Connect the positive (+) lead from the battery to terminal 1 and the negative (-) lead to terminal 2.
(c) Check that the continuity exists when the window goes up.

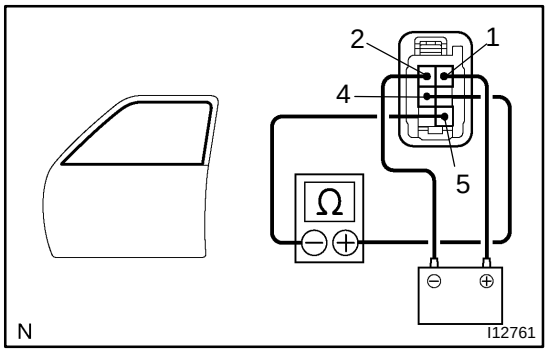

(d) Check that the no continuity exists when the window is in the fully closed position.

If operation is not as specified, replace the motor.

NOTICE:

If connecting the wire harness wrongly, the sensor might be damaged so caution is necessary.

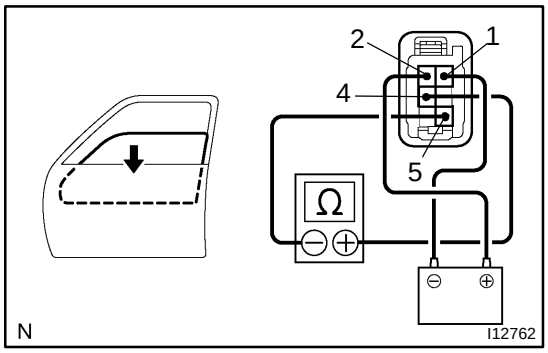

15. Driver's Door (Window Down):
INSPECT JAM PROTECTION LIMIT SWITCH OPERATION

(a) Connect the negative (-) lead from the ohmmeter to terminal 5 and the positive (+) lead to terminal 4.
(b) Connect the positive (+) lead from the battery to terminal 2 and the negative (-) lead to terminal 1.
(c) Check that the continuity exists when the window goes down.

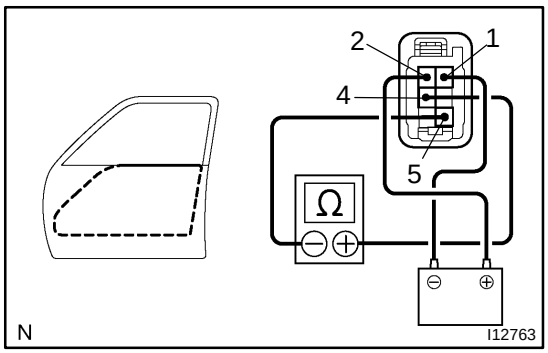

(d) Check that the no continuity exists when the window is in the fully opened position.

If operation is not as specified, replace the motor.

NOTICE:

If connecting the wire harness wrongly, the sensor might be damaged so caution is necessary.

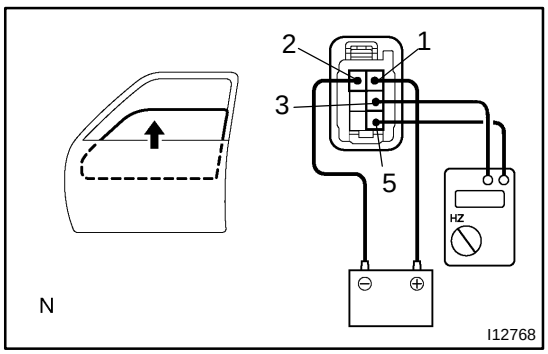

16. Driver's Door:
INSPECT JAM PROTECTION PULSE SWITCH OPERATION

(a) Connect the positive (+) lead from the TOYOTA electrical tester to terminal 3 and the negative (-) lead to terminal 5.
(b) Connect the positive (+) lead from the battery to terminal 1 and the negative (-) lead to terminal 2.
(c) Check that pulse is generated during the motor running.

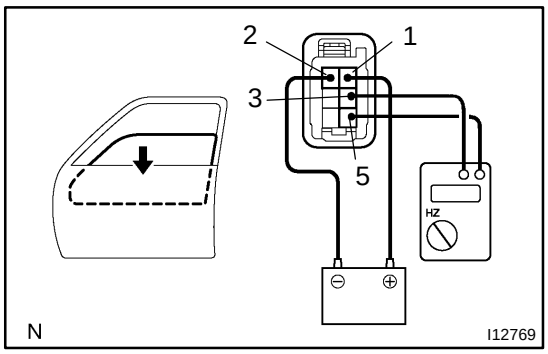

(d) Reverse the polarity and check that pulse is generated.
If operation is not as specified, replace the motor.

NOTICE:

If connecting the wire harness wrongly, the sensor might be damaged so caution is necessary.

17. INSPECT JAM PROTECTION FUNCTION

NOTICE:

Never, ever be caught any part of your body when checking.

HINT:

In case of performing resetting of the limit switch, do checking after repeating up and down of the glass with automatic operation.

(a) Confirmation of AUTO up operation:
Confirm that the window will be fully close with AUTO up operation.

(b) Checking of the operation of the jam protection function:
(1) Move up the window with AUTO up operation and check that the window will go down when it touches the handle of the hammer stetted.
(2) Confirm that the window will then stop going down about 200 mm.

HINT:

In case of removing the glass, glass guide, regulator and etc. be sure to perform checking of the jam protection function.
If the jam protection is not function properly, adjust power window motor reset switch and pulse switch.

BE0IH-03

LOCATION

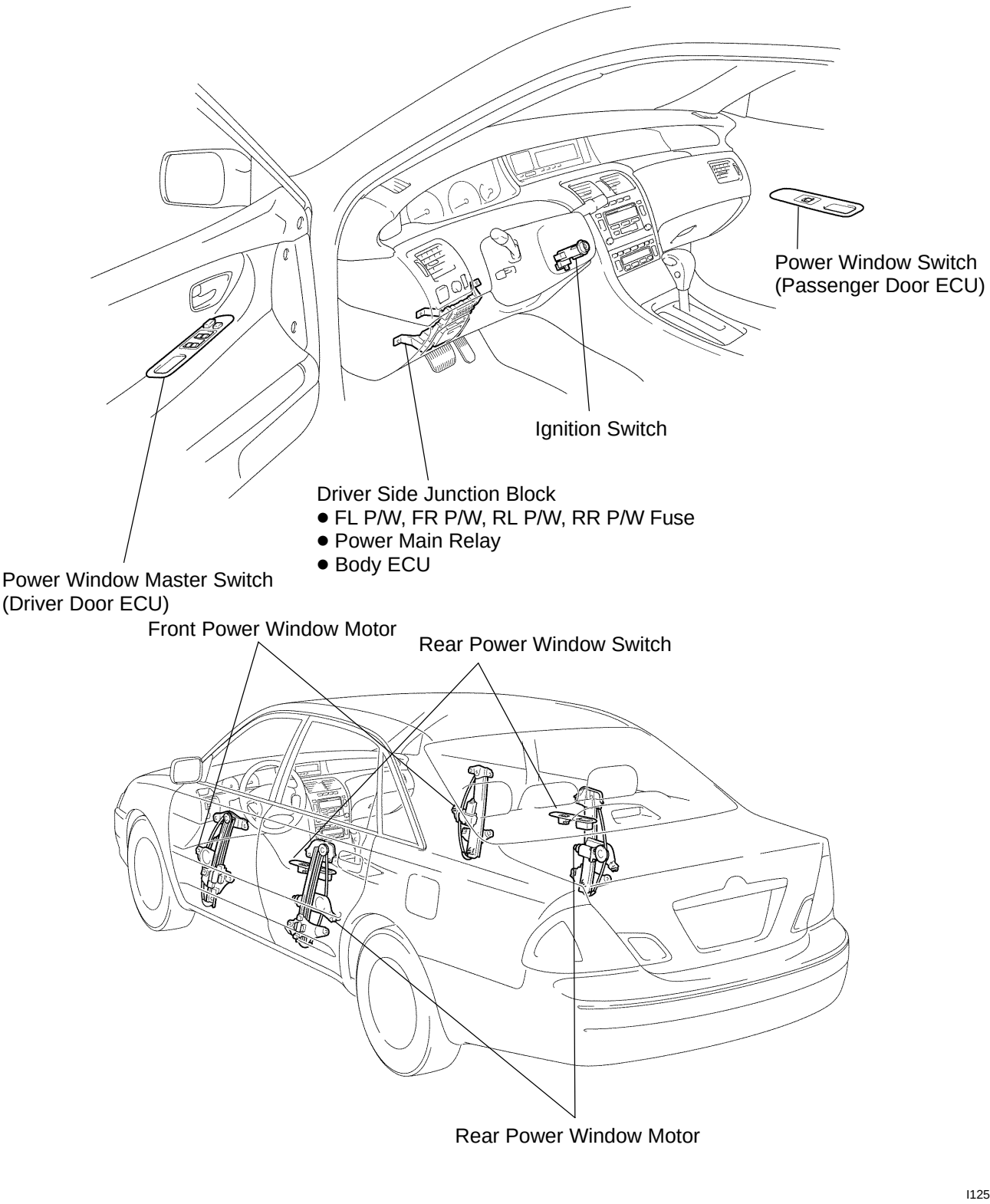

POWER WINDOW CONTROL SYSTEM

TROUBLESHOOTING

BE02C-11

1 The window moves down during the up operation.

Sliding resistance check:

With ignition switch ON, when performing the auto-up operation, if the factor which increases the sliding resistance of window glass near the inverse position is recognized.

Yes → Disassemble the door and replace or repair the component.

No

Power window motor reset:

Reset the limit switch.

Check operation power window control is normal.

Yes → Normal.
(After checking the operation repeatedly, perform the function check.)

No

Remove power window regulator assembly.

Sliding resistance check:

When raising the assembled window glass by hand if the glass slides smoothly without being caught.

No → Check or repair door glass run and window guide frame.

Yes

Unit check:

If power window regulator and motor operate smoothly.

Replace the driver door control ECU with the normal one removed from another seat.

Power window motor reset: *1

Install power window regulator and reset the limit switch.

Check operation power window control is normal.

Yes → Driver door control ECU faulty.

No

Power window motor faulty.

HINT: When difference of descending time comparing to the opposite window is recognized, there seems to be an error on sliding components (door glass run and window regulator.)

2	**The DOWN function does not work though some other objects are caught in the power window glass.**

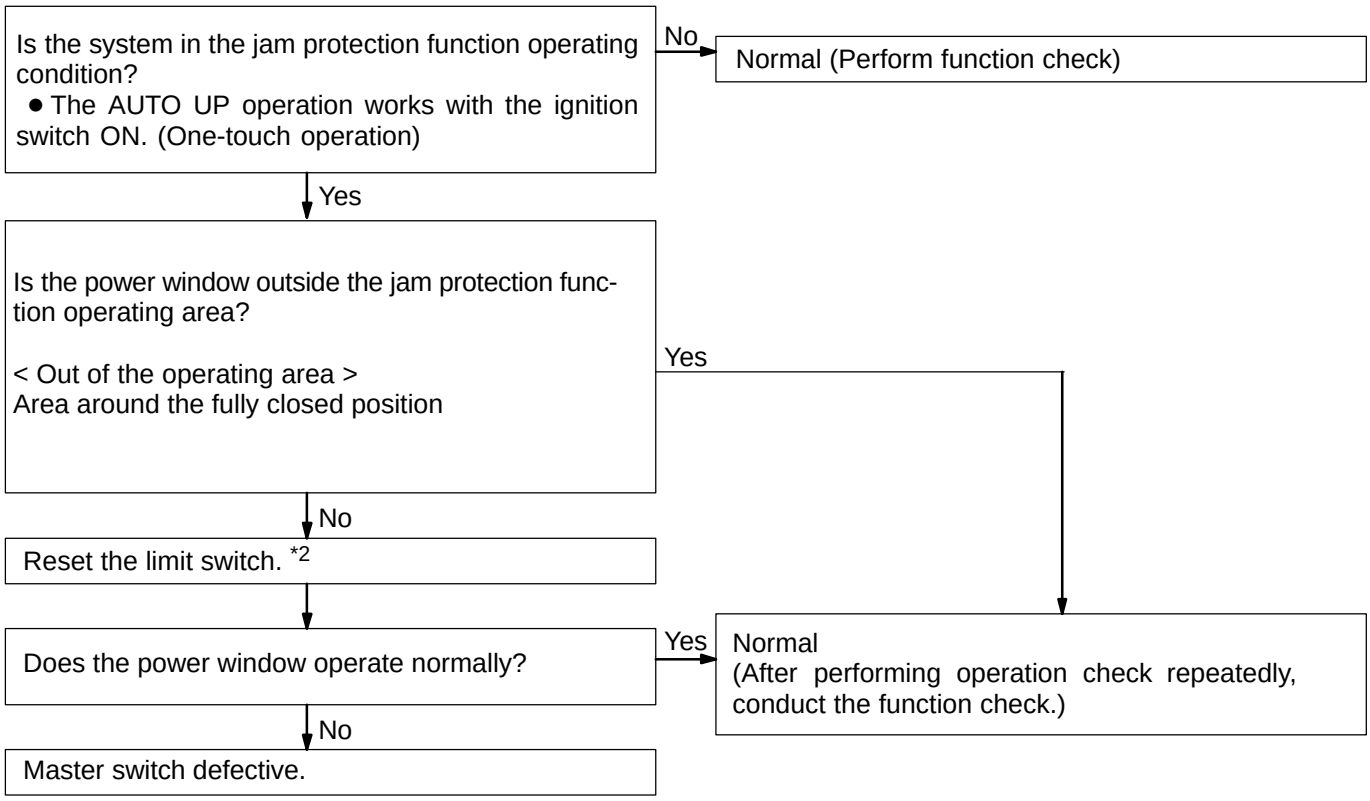

BE1EF-02

INSPECTION

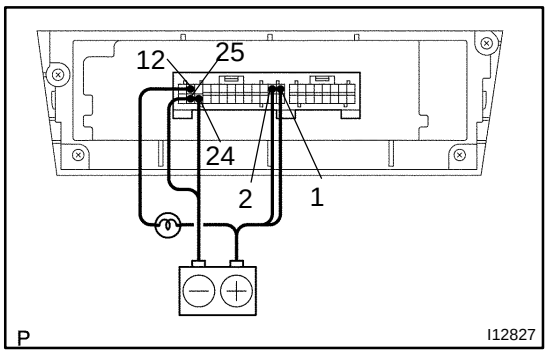

1. A/C control panel assembly:
INSPECT DRIVERS SEAT HEATER SWITCH OPERATION

(a) Connect the positive (+) lead from the battery to terminal 1, 2 and negative (-) lead to terminal 24, 25.

(b) Connect the positive (+) lead from the battery to terminal 12 through a 1.4 W test bulb.

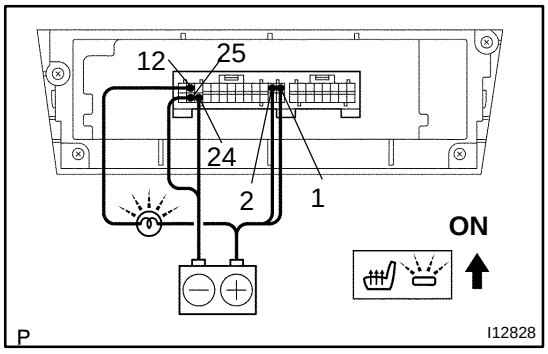

(c) Turn the drivers seat heater switch ON and check that the test bulb and indicator light turn ON.

If operation is not as specified, proceed to the next inspection.

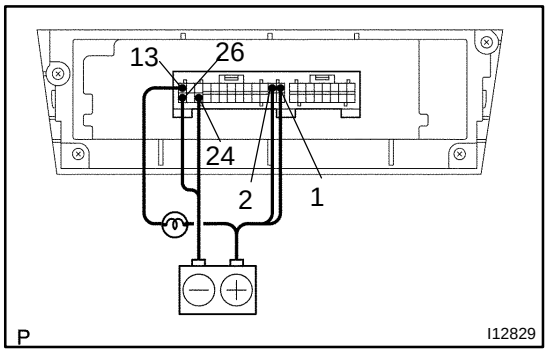

2. A/C control panel assembly:
INSPECT PASSENGER SEAT HEATER SWITCH OPERATION

(a) Connect the positive (+) lead from the battery to terminal 1, 2 and negative (-) lead to terminal 24, 26.

(b) Connect the positive (+) lead from the battery to terminal 13 through a 1.4 W test bulb.

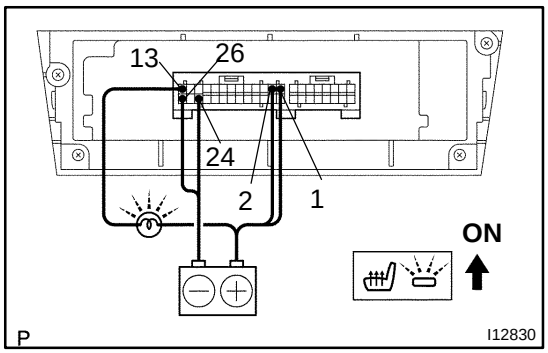

(c) Turn the passenger seat heater switch ON and check that the test bulb and indicator light turn ON.

If operation is not as specified, proceed to the next inspection.

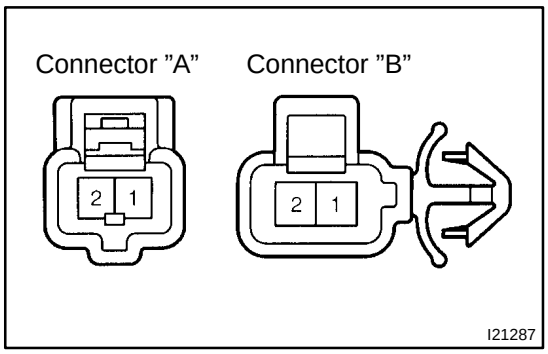

3. INSPECT SEAT CUSHION HEATER CONTINUITY

(a) Disconnect the seat back heater from the seat cushion heater.

(b) Heat the 2 thermostats with a light and check that there is no continuity above 50 °C (122 °F) between terminals A1 and B2, A2 and B1.

(c) Cool the 2 thermostats below 40 °C (104 °F) between terminals A1 and B2, A2 and B1.

If continuity is not as specified, replace the seat heater.

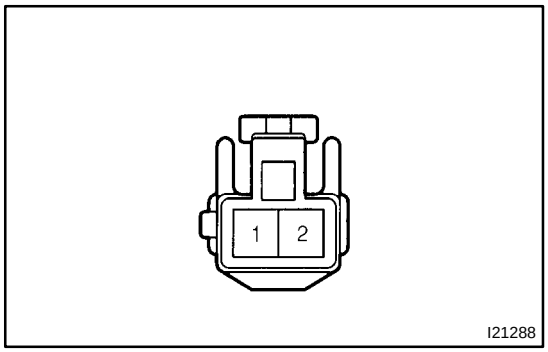

4. INSPECT SEAT BACK CONTINUITY

Check that there is continuity between terminals 1 and 2.

If continuity is not as specified, replace the seat back pad.

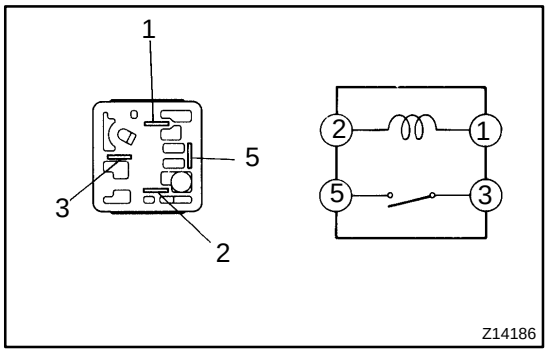

5. INSPECT IGNITION MAIN RELAY CONTINUITY

Condition	Tester connection	Specified condition
Constant	1 - 2	Continuity
Apply B+ between terminals 1 and 2.	3 - 5	Continuity

If continuity is not as specified, replace the relay.

SEAT HEATER SYSTEM

LOCATION

BE0IV-05

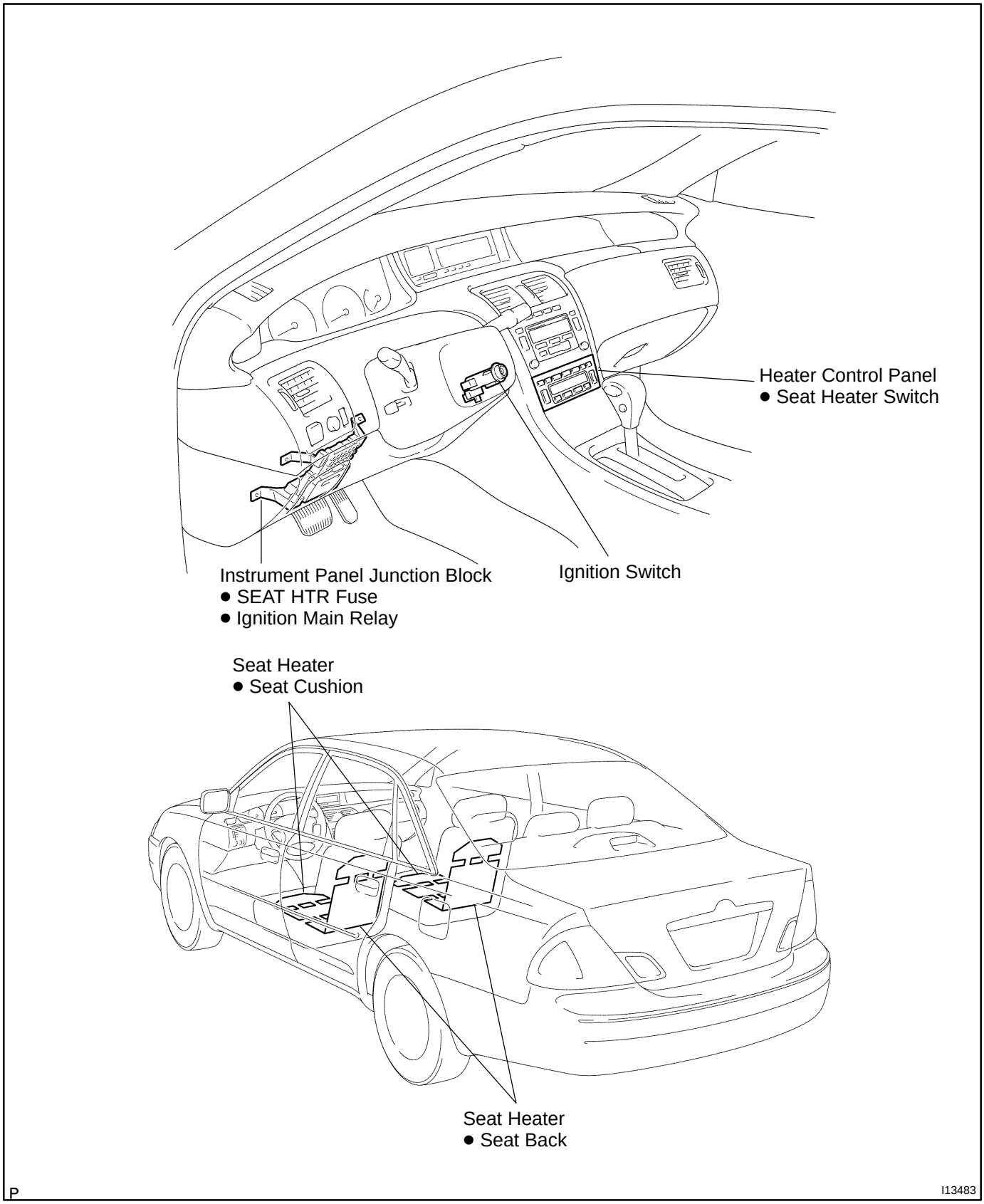

BE1DM-01

INSPECTION

1. w/o Cruise Control:

INSPECT STOP LIGHT SWITCH CONTINUITY

Switch position	Tester connection	Specified condition
Switch pin free	1 - 2	Continuity
Switch pin pushed in	1 - 2	No continuity

If continuity is not as specified, replace the switch.

2. w/ Cruise Control:

INSPECT STOP LIGHT SWITCH CONTINUITY

Switch position	Tester connection	Specified condition
Switch pin free	1 - 2	Continuity
Switch pin pushed in	1 - 2	No continuity
Switch pin free	3 - 4	No continuity
Switch pin pushed in	3 - 4	Continuity

If continuity is not as specified, replace the switch.

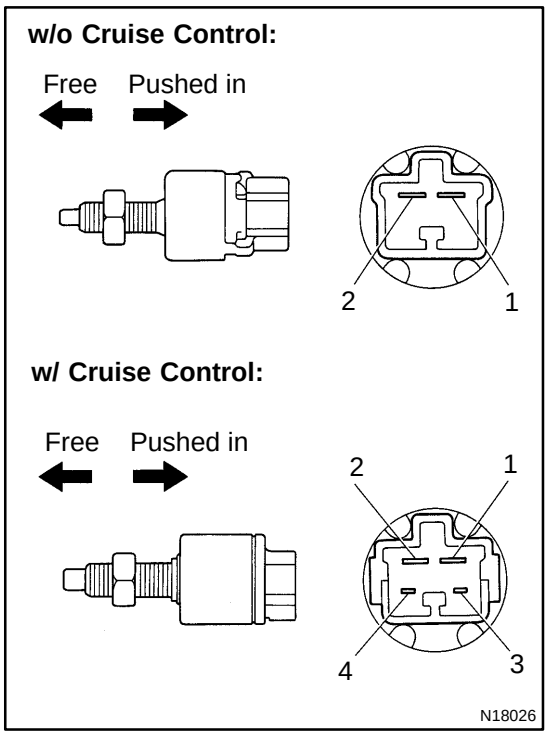

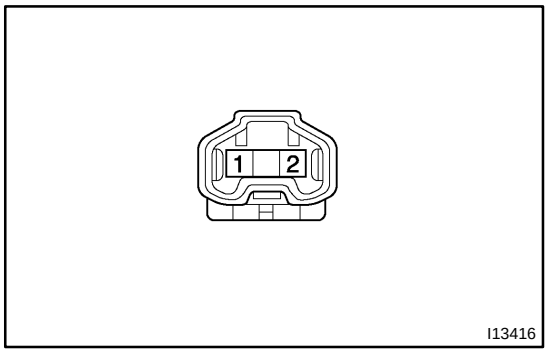

3. INSPECT HI- MOUNTED STOP LIGHT ASSEMBLY CONTINUITY

Using the ohmmeter,check that continuity exists between terminal 1 and terminal 2.

If continuity is not as specified,replace the light assembly or bulb.

STOP LIGHT SYSTEM

LOCATION

BE0I6-05

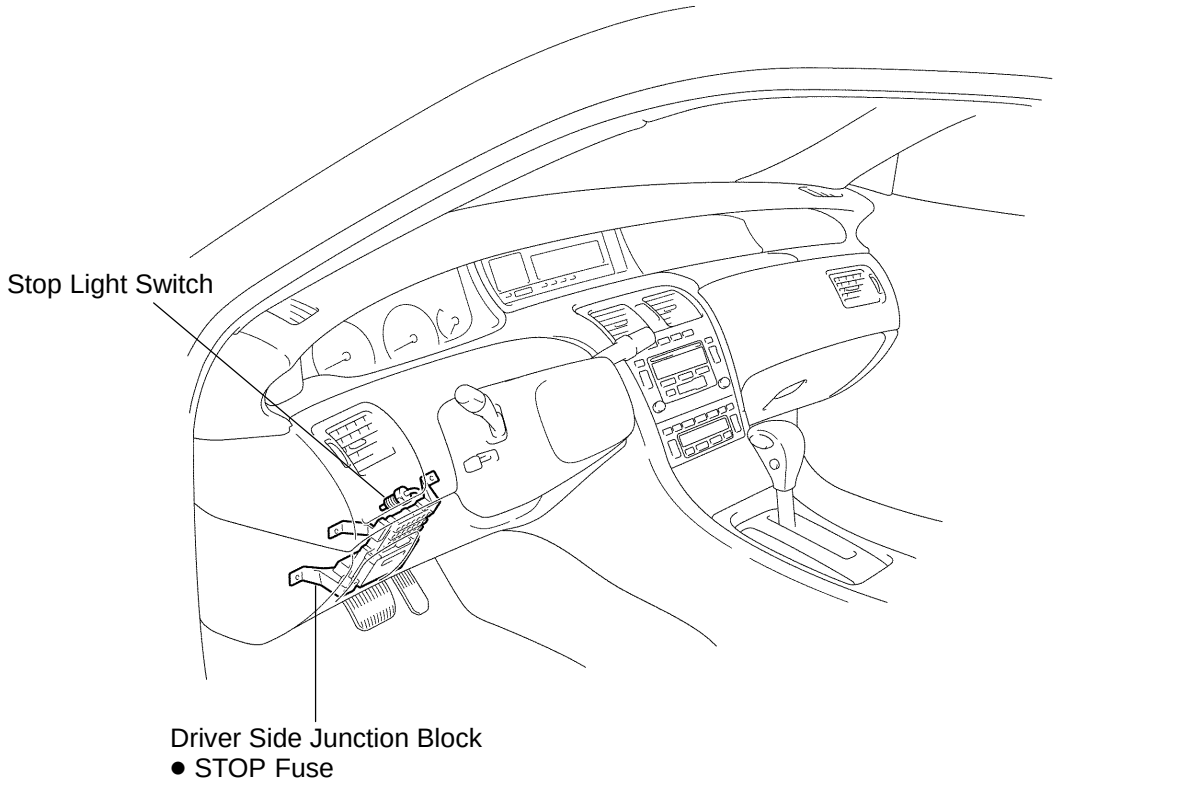

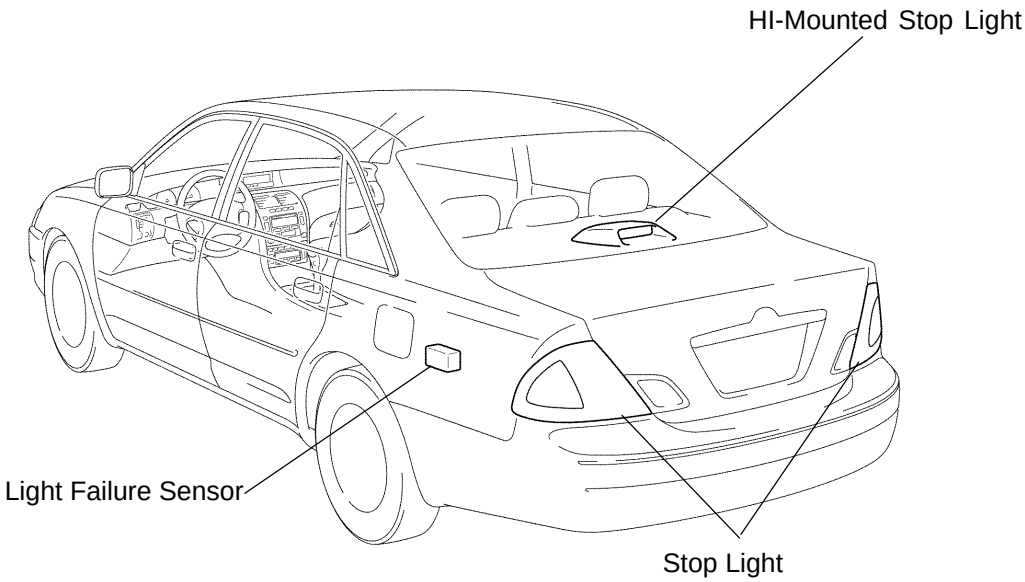

P

I12529

BE1E2-01

INSPECTION

Wire Harness Side:

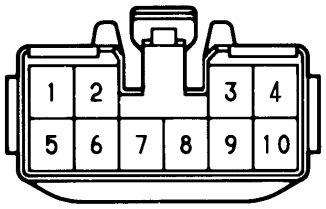

I04045

1. INSPECT SLIDING ROOF CONTROL SWITCH CONTINUITY

Switch position	Tester connection	Specified condition
Slide Open	2 - 3	Continuity
Tilt Up	1 - 2	Continuity

If continuity is not as specified, replace the switch.

2. INSPECT SLIDING ROOF CONTROL ASSEMBLY CIRCUIT

Disconnect the connector from the assembly and inspect the connector on the wire harness side, as shown in the chart.

Tester connection	Condition	Specified condition
3 - Ground (DCTY)	Driver's door courtesy switch "ON" (Door opened)	Continuity
	Driver's door courtesy switch "OFF" (Door closed)	No continuity
4 - Ground (PCTY)	Passenger's door courtesy switch "ON" (Door opened)	Continuity
	Passenger's door courtesy switch "OFF" (Door closed)	No continuity
5 - Ground (+B)	Constant	Battery positive voltage
7 - Ground (E)	Constant	Continuity
8 - Ground (IG)	Ignition switch LOCK or ACC	No voltage
	Ignition switch ON	Battery positive voltage
9 - Ground (DOWN)	Sliding roof control switch OPEN / DOWN	Continuity
9 - Ground (DOWN)	Sliding roof control switch CLOSE / UP	No continuity
10 - Ground (UP)	Sliding roof control switch CLOSE / UP	Continuity
	Sliding roof control switch OPEN / DOWN	No continuity

*: Exceptions: During 60 second period after ignition switch ON → OFF (ACC) or until driver of passenger door in opened after ignition switch ON → OFF (ACC).

If circuit is as specified, replace the assembly.

BE0IP-06

LOCATION

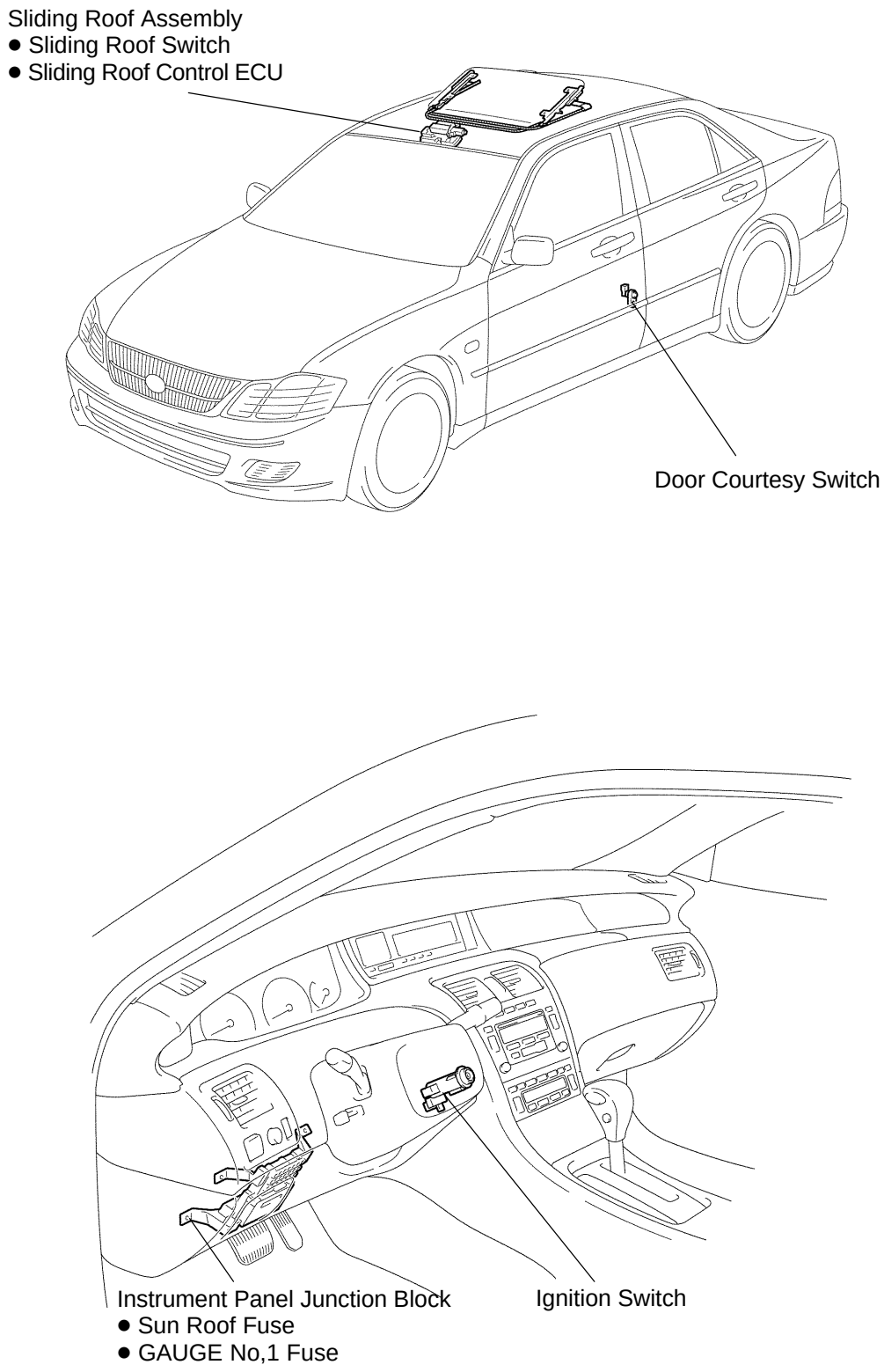

P

I12542

SLIDING ROOF SYSTEM

TROUBLESHOOTING

BE0O9-02

Sliding Roof reverses during close (down) operation.

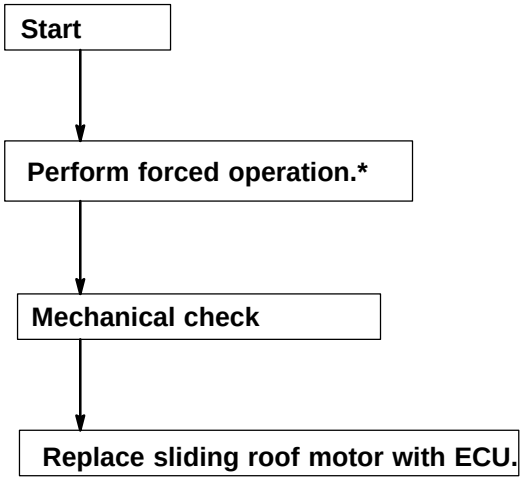

***: Holding the CLOSE/UP (OPEN/DOWN) switch pressed inhibits the jam protection function at approx. 10 sec. after starting the reverse operation.**
If the switch remains pressed any longer, the sliding door starts close operation and it stops when detecting the fully closed position.

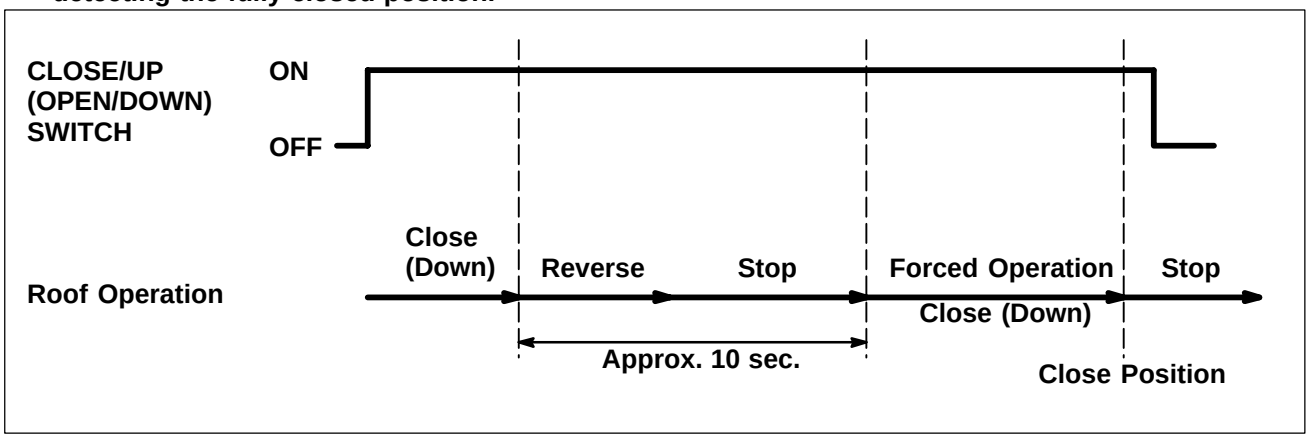

HINT:
At approx. 10 sec. after starting the reverse operation, it is switched to the forced close (down) operation.

BE04Q-06

TROUBLESHOOTING

PROBLEM SYMPTOMS TABLE

POWER OUTLET

Symptom	Suspect Area	See page
Electric power source cannot be taken out of the power outlet	11. PWR OUTLET No. 1, 2 Fuse 12. Wire Harness	- -

IGNITION SWITCH AND KEY UNLOCK WARNING SWITCH:

This system uses the multiplex communication system, so check diagnosis system of the multiplex communication system before checking the body control system.

HEADLIGHT AND TAILLIGHT SYSTEM:

This system uses the multiplex communication system, so check diagnosis system of the multiplex communication system before checking the body control system.

FOG LIGHT SYSTEM:

Symptom	Suspect Area	See page
Fog light does not light with light control SW HEAD. (Headlight is normal)	1. FOG Fuse 2. Fog Light Relay 3. Fog Light Switch 4. Wire Harness	- BE-26 BE-26 -
Fog light does not light with light control SW HEAD. (Headlight does not light)	1. Other Parts*1 2. Wire Harness	- -
Only one light does not light.	1. Bulb 2. Wire Harness	- -

*1: Inspect Headlight System.

TURN SIGNAL AND HAZARD WARNING SYSTEM:

Symptom	Suspect Area	See page
”Hazard” and ”Turn” do not light up.	1. Hazard Warning Switch 2. Turn Signal Flasher 3. Wire Harness	BE-29 BE-29 -
The flashing frequency is abnormal.	1. Bulb 2. Turn Signal Switch 3. Wire Harness	- BE-29 -
Hazard warning light does not light up. (Turn is normal.)	1. HAZ Fuse 2. Wire Harness	- -
Hazard warning light does not light up in one direction.	1. Hazard Warning Switch 2. Wire Harness	BE-29 -
*1Turn signal does not light up.	1. Ignition Switch 2. TURN Fuse 3. Turn Signal Switch 4. Wire Harness	BE-16 - BE-29 -
*2Turn signal does not light up.	1. TURN Fuse 2. Turn Signal Switch 3. Wire Harness	- BE-29 -
Turn signal does not light up in one direction.	1. Turn Signal Switch 2. Wire Harness	BE-29 -
Only one bulb does not light up.	1. Bulb 2. Wire Harness	- -

*1: Combination Meter, Wiper and Washer do not operate.

*2: Combination Meter, Wiper and Washer are normal.

INTERIOR LIGHT SYSTEM:

This system uses the multiplex communication system, so check diagnosis system of the multiplex communication system before checking the body control system.

BACK-UP LIGHT SYSTEM:

Symptom	Suspect Area	See page
Back-Up Light does not light up.	1. GAUGE Fuse 2. Ignition Switch 3. Park/Neutral Position Switch 4. Back-up Light Relay (Column Shift) 5. Bulb 6. Wire Harness	- BE-16 DI-199 BE-34 - -
Back-Up Light remains always ON.	1. Park/Neutral Position Switch 2. Back-up Light Relay (Column Shift) 3. Wire Harness	DI-199 BE-34 -
Only one light does not light up.	1. Bulb 2. Wire Harness	- -

STOP LIGHT SYSTEM:

Symptom	Suspect Area	See page
Stop light does not light up.	1. STOP Fuse 2. GAUGE Fuse 3. Stop Light Switch 4. Light Failure Sensor 5. Wire Harness	- - BE-36 BE-53 -
Only one light always lights up.	1. Wire Harness	-
Only one light does not light.	1. Bulb 2. Wire Harness	- -

WIPER AND WASHER SYSTEM:

Symptom	Suspect Area	See page
Wiper and washers do not operate.	1. IG 1 Relay 2. WIPER Fuse 3. Wiper Switch 4. Wiper Motor 5. Wire Harness	- - BE-38 BE-38 -
Wipers do not operate in LO or HI.	1. Wiper Switch 2. Wiper Motor 3. Wire Harness	BE-38 BE-38 -
Wipers do not operate in INT.	1. Wiper Fuse 2. Wiper Switch 3. Wiper Motor 4. Wire Harness	- BE-38 BE-38 -
Washer motor does not operate.	1. Washer Switch 2. Washer Motor 3. Wire Harness	BE-38 BE-38 -
Wipers do not operate when washer switch in ON.	1. Washer Motor 2. Wire Harness	BE-38 -
Washer fluid does not operate.	1. Washer Hose and Nozzle	-
● In wiper switch HI position, the wiper blade is in contact with the body. ● When the wiper switch is OFF, the wiper blade does not retract or the retract position is wrong.	1. *1Wiper Switch 2. Wire Harness	BE-38 -

*1: Inspect wiper arm and blade set position

COMBINATION METER (Meter, Gauges and Illumination):

Symptom	Suspect Area	See page
Tachometer, Fuel Gauge and Engine Coolant Temperature Gauge do not operate.	1. ECU-B Fuse 2. ECU-IG No. 2 Fuse 3. Meter Circuit Plate 4. Wire Harness 5. Multi Display	- - BE-43 - -
Speedometer does not operate.	1. Vehicle Speed Sensor (ABS - ECU) 2. Meter Circuit Plate 3. Wire Harness 4. Multi Display	BE-53 BE-43 - -
Tachometer does not operate.	1. EFI - ECU 2. Meter Circuit Plate 3. Wire Harness 4. Multi Display	- BE-43 - -
Fuel Gauge does not operate or abnormal operation.	1. Fuel Receiver Gauge 2. Fuel Sender Gauge 3. Meter Circuit Plate 4. Wire Harness	BE-53 BE-53 BE-43 -
Engine Coolant Temperature Gauge does not operate or abnormal operation.	1. Engine Coolant Temperature Receiver Gauge 2. Engine Coolant Temperature Sender Gauge 3. Meter Circuit Plate 4. Wire Harness	BE-53 BE-53 BE-43 -
All illumination lights do not light up.	1. Bulb 2. PANEL Fuse 3. Light Control Rheostat 4. Wire Harness	- - BE-53 -
Brightness does not change even when rheostat turned.	1. Bulb 2. Rheostat 3. Wire Harness	- - -
Only one illumination light does not light up.	1. Bulb 2. Wire Harness	- -

COMBINATION METER (Warning Lights):

Symptom	Suspect Area	See page
Warning lights do not light up. (Except Discharge, Open Door and SRS)	1. Bulb 2. GAUGE No. 1 Fuse 3. Meter Circuit Plate 4. Wire Harness	- - BE-53 -
Low Oil Pressure warning light does not light up.	1. Multi Display 2. Bulb 3. Low Oil Pressure Warning Switch 4. Meter Circuit Plate 5. Wire Harness	- - BE-53 BE-43 -
Fuel Level warning light does not light up.	1. Multi Display 2. Bulb 3. Fuel Sender Gause 4. Meter Circuit Plate 5. Wire Harness	- - BE-53 BE-43 -
ABS warning light does not light up.	1. Bulb 2. ABS ECU 3. Wire Harness	- DI-210 -

Seat Belt warning light does not light up.	1. Bulb 2. Body Control System 3. Meter Circuit Plate 4. Wire Harness	- DI-615 BE-53 -
Discharge warning light does not light up.	1. AM2 - Fuse 2. Bulb 3. Meter Circuit Plate 4. Wire Harness 5. Generator	- - BE-53 - CH-9
Light Failure warning light does not light up.	1. Bulb 2. Light Failure Sensor 3. Bulb Check Relay 4. Wire Harness 5. Taillight System	- BE-53 BE-53 - BE-2
Brake warning light does not light up.	1. Bulb 2. Parking Brake Switch 3. Brake Fluid Level Warning Switch 4. Bulb Check Relay 5. Meter Circuit Plate 6. Wire Harness	- BE-53 BE-53 BE-53 BE-43 -
SRS Warning light does not light up.	1. AM2 - Fuse 2. Bulb 3. Airbag Sensor Assembly 4. Meter Circuit Plate 5. Wire Harness	- - RS-62 RS-67 BE-43
Open Door warning light does not light up.	1. DOME Fuse 2. Bulb 3. Door Courtesy Switch 4. Body Control System 5. Meter Circuit Plate 6. Wire Harness	- - BE-31 DI-615 BE-43 -
Washer Level warning light does not light up.	1. Bulb 2. Washer Fluid Level Warning Switch 3. Meter Circuit Plate 4. Wire Harness	- BE-53 BE-43 -

COMBINATION METER (Indicator Lights):

Symptom	Suspect Area	See page
O/D OFF indicator light does not light up.	1. Bulb 2. O/D OFF Switch 3. ECM 4. Meter Circuit Plate 5. Wire Harness	- DI-203 DI-1 BE-43 -
Cruise Control indicator light does not light up.	1. Bulb 2. Cruise Control ECU 3. Meter Circuit Plate 4. Wire Harness	- DI-549 BE-43 -
High beam indicator light does not light up.	1. Bulb and Taillight 2. Headlight System 3. Meter Circuit Plate 4. Wire Harness	- BE-2 BE-43 -
Turn indicator light does not light up.	1. Bulb 2. Turn Signal and Hazard Warning System 3. Meter Circuit Plate 4. Wire Harness	- BE-2 BE-43 -

Shift indicator lights do not light up.	1. Bulb 2. Park/Neutral Position Switch 3. Meter Circuit Plate 4. Wire Harness	- DI-199 BE-43 -
Only one shift indicator does not light up.	1. Bulb 2. Meter Circuit Plate	- BE-43
Malfunction indicator light does not light up.	1. Bulb 2. ECM 3. Meter Circuit Plate 4. Wire Harness	- DI-1 BE-43 -
SLIP indicator light does not light up.	1. Bulb 2. ABS & TRAC ECU 3. Meter Circuit Plate 4. Wire Harness	- DI-250 BE-43 -
TRAC OFF indicator light does not light up.	1. Bulb 2. ABS & TRAC ECU 3. Meter Circuit Plate 4. Wire Harness	- DI-250 BE-43 -
Security indicator light does not light up.	1. LED 2. Theft Deterrent ECU 3. Meter Circuit Plate 4. Wire Harness	- DI-517 BE-43 -
Indicator lights do not light up. (Except Turn, Hi-beam and security)	1. GAUGE Fuse 2. Wire Harness	- -

DEFOGGER SYSTEM:

Symptom	Suspect Area	See page
All defogger systems do not operate.	1. SEAT HEATER Fuse 2. DEF Fuse 3. Defogger Relay 4. Defogger Switch 5. Wire Harness	- - BE-67 DI-1 -
Rear window defogger does not operate.	1. Defogger Wire 2. Choke Coil 3. Wire Harness	BE-67 - -
Mirror defogger does not operate.	1. MIR/HTR Fuse 2. Mirror Defogger 3. Wire Harness	- BE-67 -

POWER WINDOW CONTROL SYSTEM:

This system uses the multiplex communication system, so check diagnosis system of the multiplex communication system before checking the body control system.

POWER DOOR LOCK CONTROL SYSTEM:

This system uses the multiplex communication system, so check diagnosis system of the multiplex communication system before checking the body control system.

WIRELESS DOOR LOCK CONTROL SYSTEM

This system uses the multiplex communication system, so check diagnosis system of the multiplex communication system before checking the body control system.

Some functions of wireless door lock control system do not operate.

HINT:

Troubleshooting of the wireless door lock control system is based on the premise that the door lock control system is operating normally. Accordingly, before troubleshooting the wireless door lock control system, first make certain that the door lock control system is operating normally.

If the trouble still reappears even though there are no abnormalities in any of the other circuits, then check and replace the Wireless Door Lock Control Receiver as the last step.

SLIDING ROOF SYSTEM:

Symptom	Suspect Area	See page
Sliding roof system does not operate. (Door Lock does not operate)	1. SUN ROOF Fuse 2. GAUGE Fuse 3. Wire Harness	- - -
Sliding roof system does not operate. (Door Lock is normal)	1. Sliding Roof Control Switch 2. Sliding Roof Motor and Limit Switch 3. Sliding Roof Control Relay 4. Wire Harness	BE-103 BE-103 BE-103 -
Sliding roof system operates abnormally.	1. Sliding Roof Control Switch 2. Sliding Roof Motor and Limit Switch 3. Sliding Roof Control Relay 4. Wire Harness	BE-103 BE-103 BE-103 -
Sliding roof system stops operation half way. (Stones of foreign material trapped in motor assembly)	1. Sliding Roof Control Relay and Switch 2. Sliding Roof Motor and Limit Switch 3. Wire Harness	BE-103 BE-103 -
”Key-off Sliding Roof” operation does not operate.	1. DOOR Fuse 2. GAUGE Fuse 3. Ignition Switch 4. Body ECU 5. Wire Harness	- - BE-16 BE-16 -

POWER SEAT CONTROL SYSTEM (w/o Driving position memory driver’s seat):

Symptom	Suspect Area	See page
Power seat does not operate. (Door lock system does not operate)	1. DOOR Fuse 2. Wire Harness	- -
Power seat does not operate. (Door lock system is normal)	1. Power Seat Swtich (D,P) 2. Wire Harness	BE-105 -
”Slide operation” does not operate.	1. Power Seat Switch (D, P) 2. Slide Motor (D, P) 3. Wire Harness	BE-16 BE-105 -
”Front vertical Operation” does not operate.	1. Power Seat Switch (D, P) 2. Front Vertical Motor (D, P) 3. Wire Harness	BE-105 BE-105 -
”Rear vertical” does not operate.	1. Power Seat Switch 2. Rear Vertical Motor 3. Wire Harness	BE-105 BE-105 -
”Reclining Operation” does not operate.	1. Power Seat Switch (D, P) 2. Reclining Motor (D, P) 3. Wire Harness	BE-105 BE-105 -

(D): Driver’s Seat

(P): Passenger’s Seat

POWER MIRROR CONTROL SYSTEM:

This system uses the multiplex communication system, so check diagnosis system of the multiplex communication system before checking the body control system.

ELECTRO CHROMIC MIRROR SYSTEM

Symptom	Suspect Area	See page
Electro Chromic Inner Mirror does not operate.	1. ECU-IG Fuse 2. Elector Chromic Inner Mirror 3. Wire Harness	BE-120

SEAT HEATER SYSTEM:

Symptom	Suspect Area	See page
Seat heaters do not operate. (Driver's and Passenger's)	1. SEAT HEATER Fuse 2. Ignition Main Relay 3. Wire Harness	- BE-122 -
Driver's seat heater does not operate.	1. Seat Heater Switch (Driver's) 2. Seat Heater 3. Wire Harness	BE-122 BE-122 -
Passenger's seat heater does not operate.	1. Seat Heater Switch (Passenger's) 2. Seat Heater 3. Wire Harness	BE-122 BE-122 -
Seat Heater temperature is too hot.	1. Seat Heater	BE-122

GARAGE DOOR OPENER SYSTEM

Symptom	Suspect Area	See page
The equipment of which code has been registered does not operate.	1. Garage Door Opener 2. Wire Harness 3. *	BE-170
LED does not light up. (Even though either switch is pressed.)	1. Garage Door Opener 2. Wire Harness	BE-170
LED does not light up. (Only one switch is pressed.)	1. Garage Door Opener	BE-170

* As the GARAGE DOOR OPENER on the vehicle side seems to be normal, check the OPENER on the equipment side, of which code has been registered.

BE0I1-04

INSPECTION

1. INSPECT TURN SIGNAL SWITCH CONTINUITY

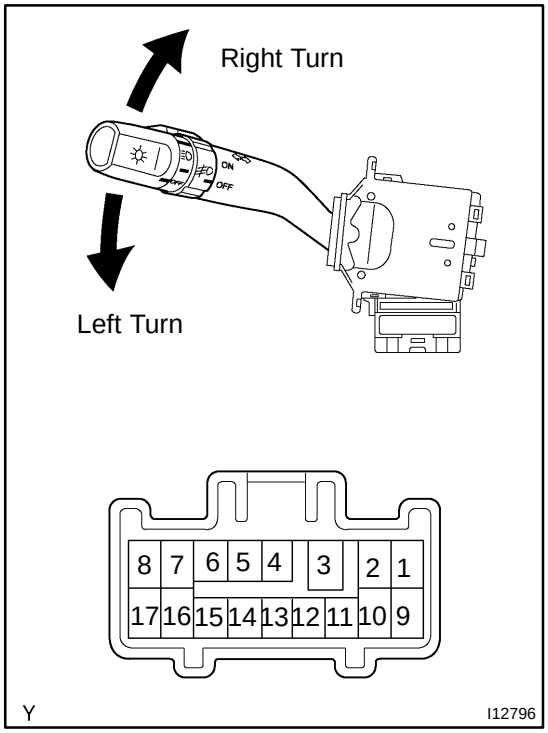

Switch position	Tester connection	Specified condition
Left turn	1 - 2	Continuity
Neutral	-	No continuity
Right turn	2 - 3	Continuity

If continuity is not as specified, replace the switch.

2. INSPECT HAZARD WARNING SWITCH CONTINUITY

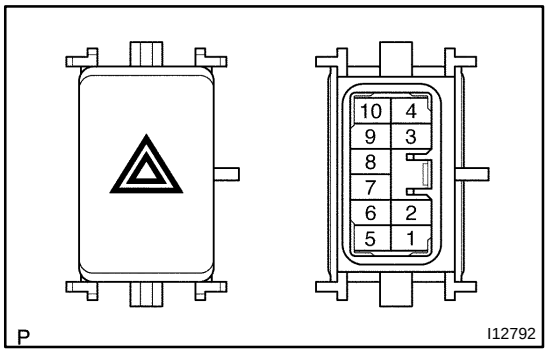

Condition	Tester connection	Specified condition
OFF	5 - 7	Continuity
ON	5 - 6, 1 - 2 - 3 - 4	Continuity
Illumination circuit	8 - 9	Continuity

If continuity is not as specified, replace the switch.

3. INSPECT TURN SIGNAL FLASHER OPERATION

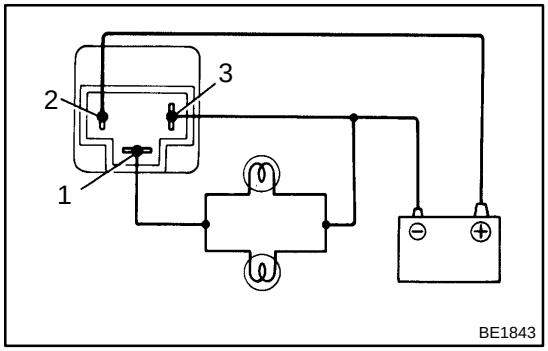

(a) Connect the positive (+) lead from the battery to terminal 2 and the negative (-) lead to terminal 3.

(b) Connect the 2 turn signal light bulbs parallel to each other to terminals 1 and 3, check that the bulbs flash.

HINT:

- The turn signal lights should flash 60 or 120 times per minute.
- If one of the front or rear turn signal lights has an open circuit, the number of flashers will be more than 140 per minute.
- If operation is not as specified, replace the flasher.

TURN SIGNAL AND HAZARD WARNING SYSTEM

LOCATION

BE0I0-04

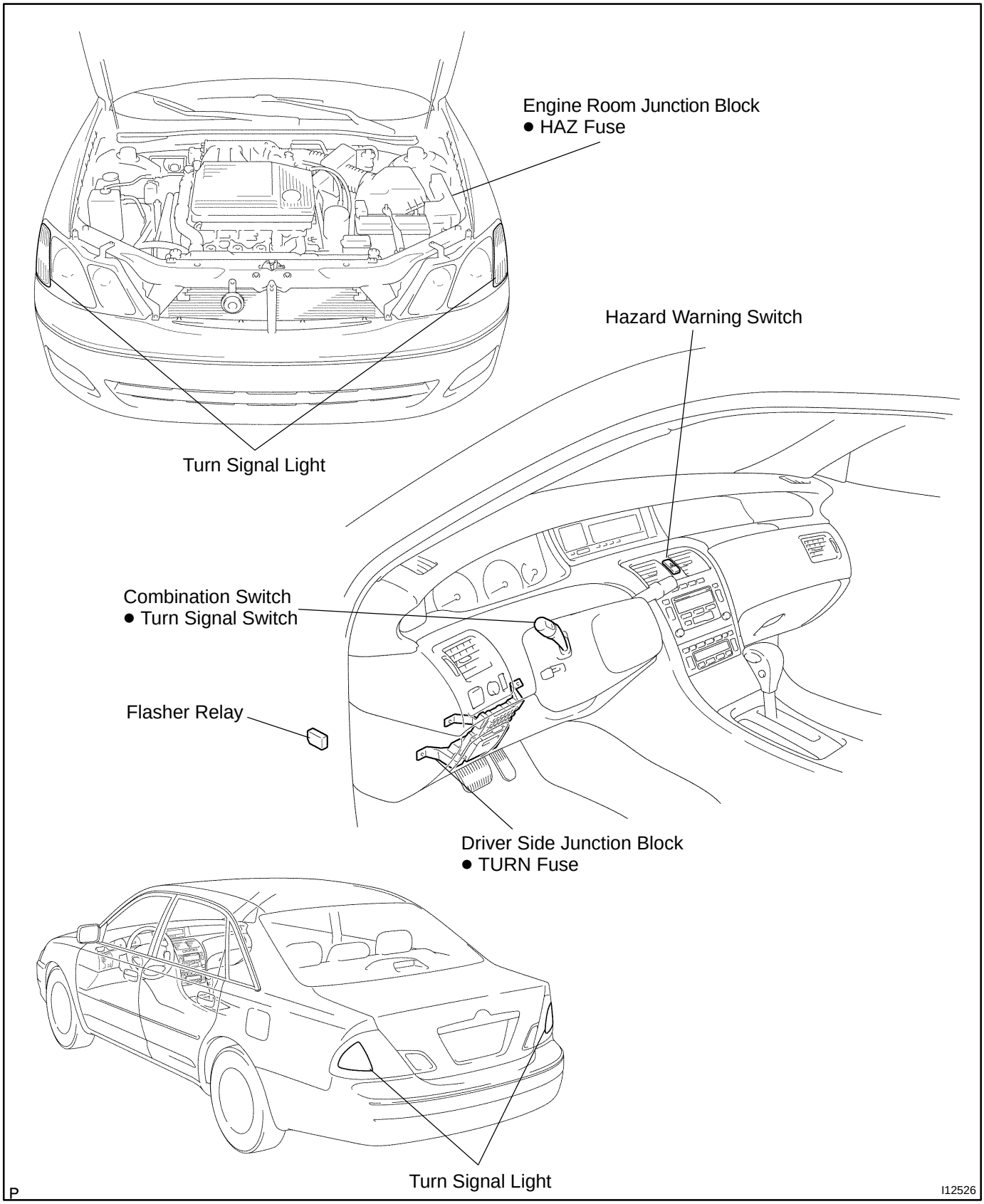

BE1DN-01

INSPECTION

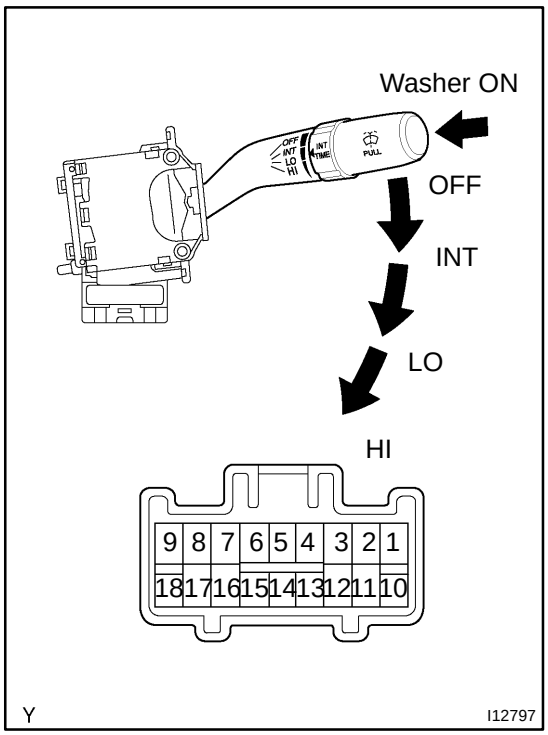

1. INSPECT WIPER AND WASHER SWITCH CONTINUITY

Switch position	Tester connection	Specified condition
OFF	7 - 16	Continuity
MIST (w/ Mist wiper)	3 - 11	Continuity
INT (w/ Intermittent wiper)	7 - 16	Continuity
LO	7 - 17	Continuity
HI	8 - 17	Continuity
Washer ON	2 - 11	Continuity

If continuity is not as specified, replace the switch.

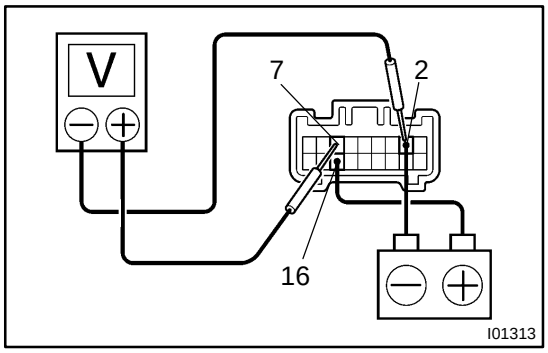

2. INSPECT WIPER INTERMITTENT OPERATION

(a) Turn the wiper switch to INT position.

(b) Turn the intermittent time control switch to FAST position.

(c) Connect the positive (+) lead from the battery to terminal 16 and the negative (-) lead to terminal 2.

(d) Connect the positive (+) lead from the voltmeter to terminal 7 and the negative (-) lead to terminal 2, check that the meter needle indicates battery positive voltage.

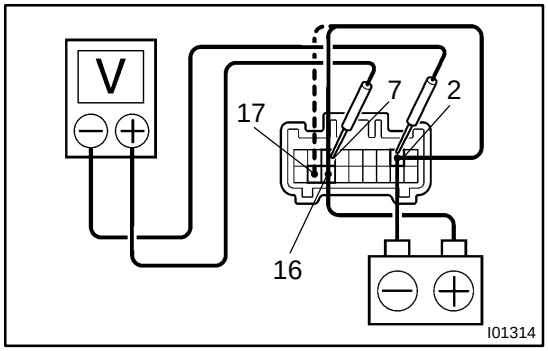

(e) After connecting terminal 16 to terminal 17, connect to terminal 2 to terminal 17, check the voltage rises from 0 volts to battery positive voltage with in the times, as shown in the table.

INT time control switch position	**Voltage**
FAST	Approx. 1 - 3 sec. Battery positive voltage 0 Volt
SLOW	Approx. 10 - 15 sec. Battery positive voltage 0 Volt

If operation is not as specified, replace the wiper and washer switch.

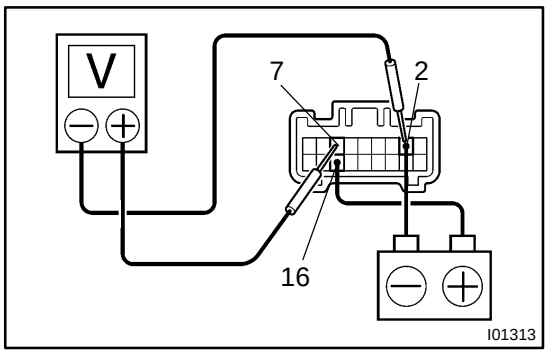

3. INSPECT WASHER LINKED OPERATION

(a) Connect the positive (+) lead from the battery to terminal 16 and the negative (-) lead to terminal 2.

(b) Connect the positive (+) lead from the voltmeter to terminal 7 and the negative (-) lead to terminal 2.

(c) Push in the washer switch, and check that the voltage changes as shown in the table.

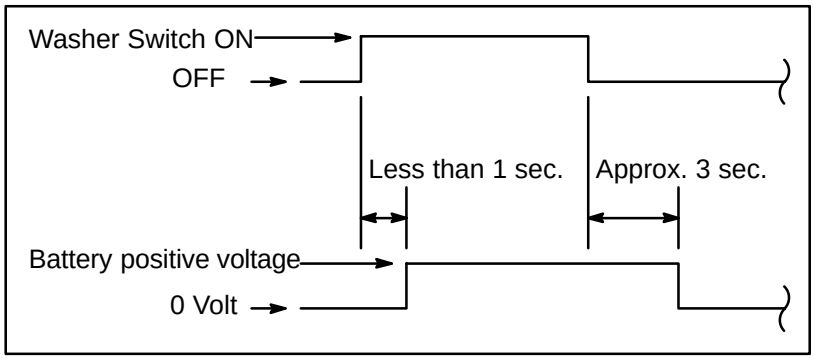

If operation is not as specified, replace the wiper and washer switch.

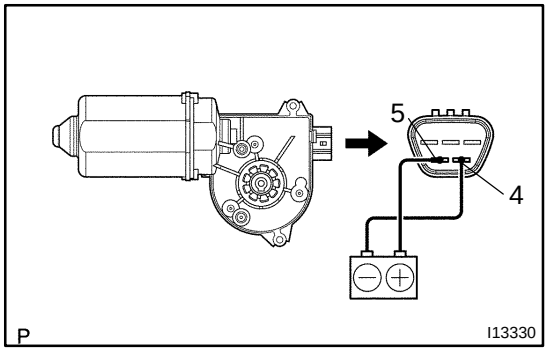

4. Low speed:
INSPECT WIPER MOTOR OPERATION

Connect the positive (+) lead from the battery to terminal 5 and the negative (-) lead from the battery to the motor body or terminal 4, and check that the motor operates at low speed.
If operation is not as specified, replace the motor.

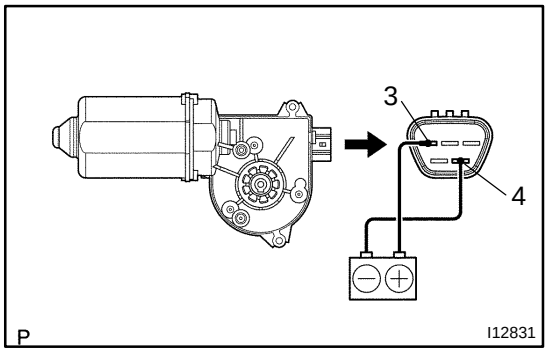

5. High speed:
INSPECT WIPER MOTOR OPERATION

Connect the positive (+) lead from the battery to terminal 3 and the negative (-) lead from the battery to the motor body or terminal 4, and check that the motor operates at high speed.
If operation is not as specified, replace the motor.

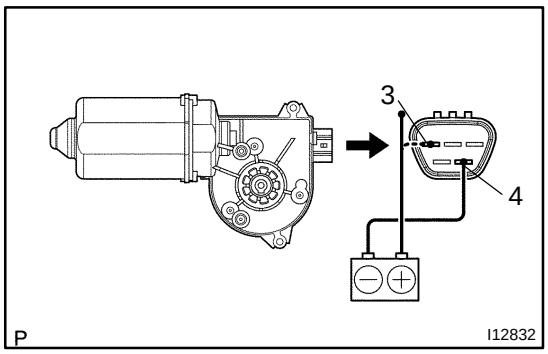

6. Stopping at stop position:
INSPECT WIPER MOTOR OPERATION

(a) Operate the motor at low speed and stop the motor operation anywhere except at the stop position by disconnecting positive (+) lead from terminal 3.

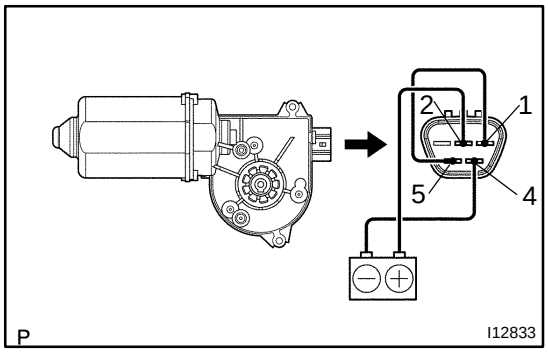

(b) Connect terminals 1 and 5.
(c) Connect the positive (+) lead from the battery to terminal 2 and the negative (-) lead from the battery to the motor body or terminal 4, and check that the motor stops running at the stop position after the motor operates again.

If operation is not as specified, replace the motor.

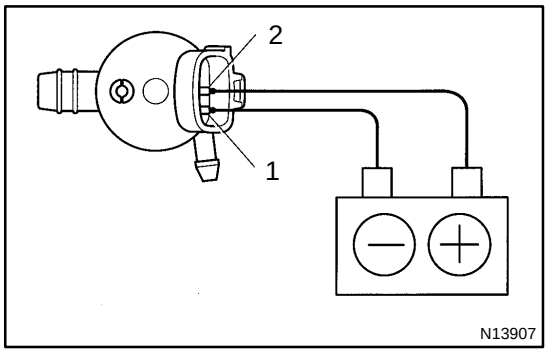

7. INSPECT WASHER MOTOR OPERATION

Connect the positive (+) lead from the battery to terminal 2 and the negative (-) lead to terminal 1, check that the motor operates.

NOTICE:

These tests must be performed quickly (within 20 seconds) to prevent the coil from burning out.

If operation is not as specified, replace the motor.

WIPER AND WASHER SYSTEM

BE0IA-03

LOCATION

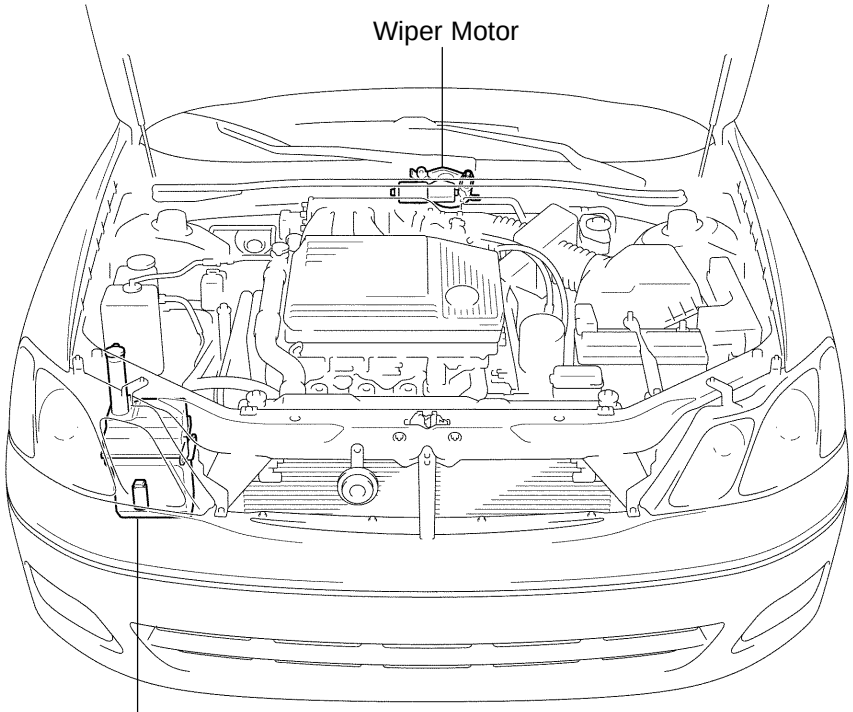

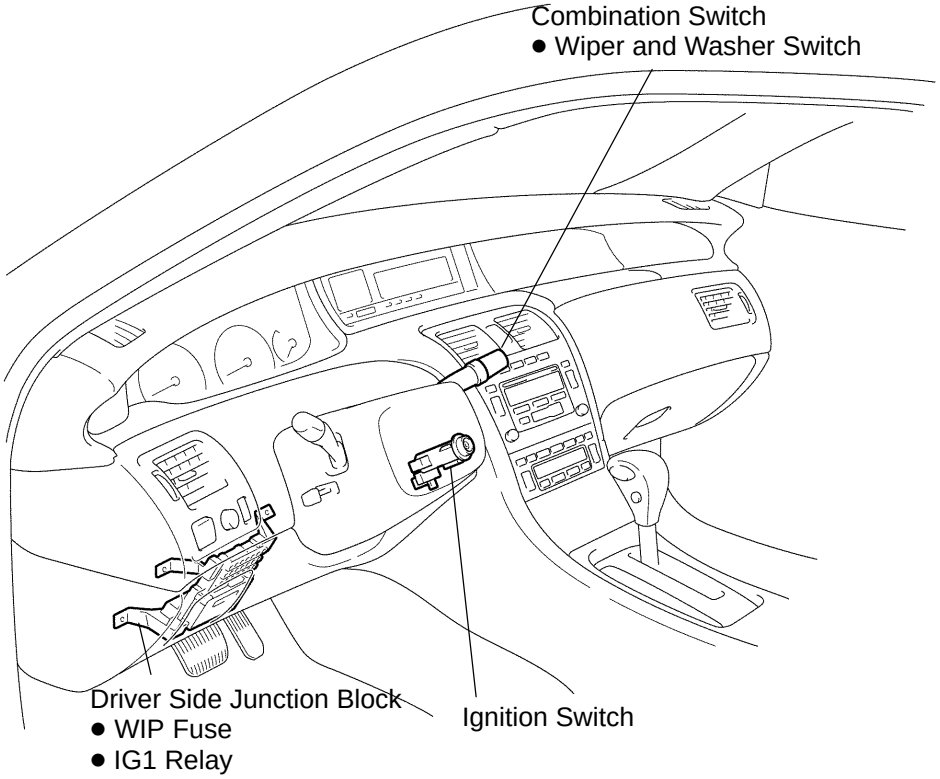

P

I12530

BE2MA-01

INSPECTION

1. INSPECT WIRELESS DOOR LOCK DIAGNOSIS MODE

(a) Start up diagnosis mode.

HINT:

Follow the method below.

(1) Insert the ignition key into the ignition key cylinder.
(2) Remove the ignition key from the ignition key cylinder.
(3) Insert the key into the ignition switch.
(4) Turn the ignition switch ON once within 5 sec.
(5) Repeat turning the ignition switch OFF → ON 9 times within 30 sec.
(6) Enter the diagnosis mode, and make sure that the buzzer sounds.

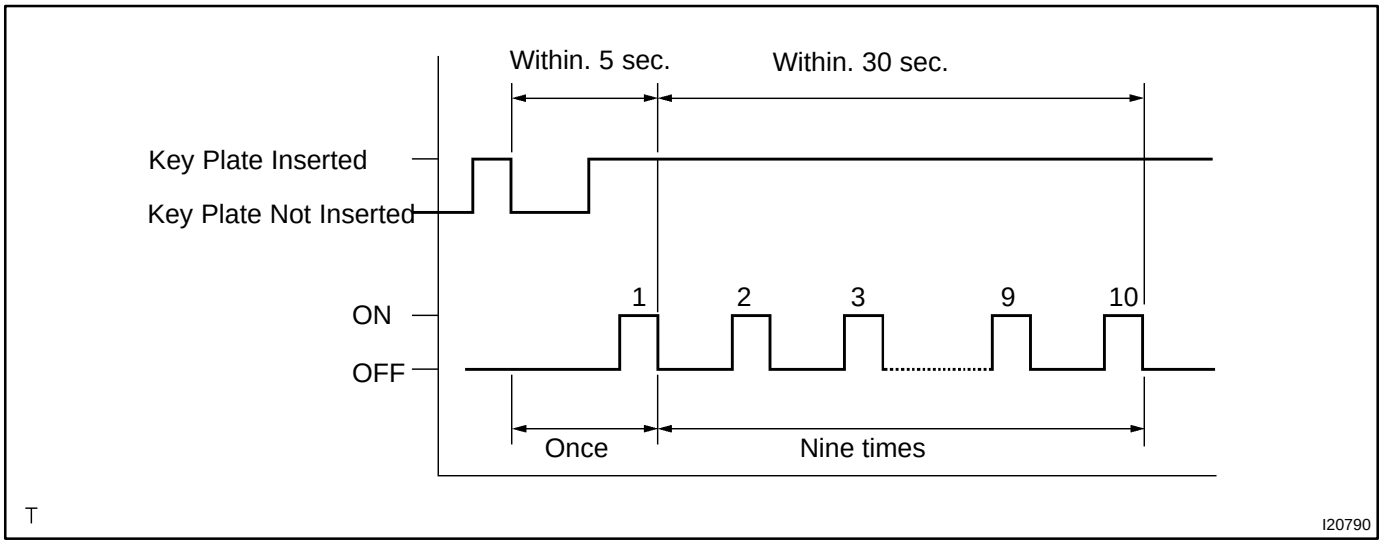

(b) Finishing the Diagnosis Mode.
During the Diagnosis mode, turn the ignition switch OFF → ON to go back to the normal mode.
At this time make sure that the buzzer sounds.

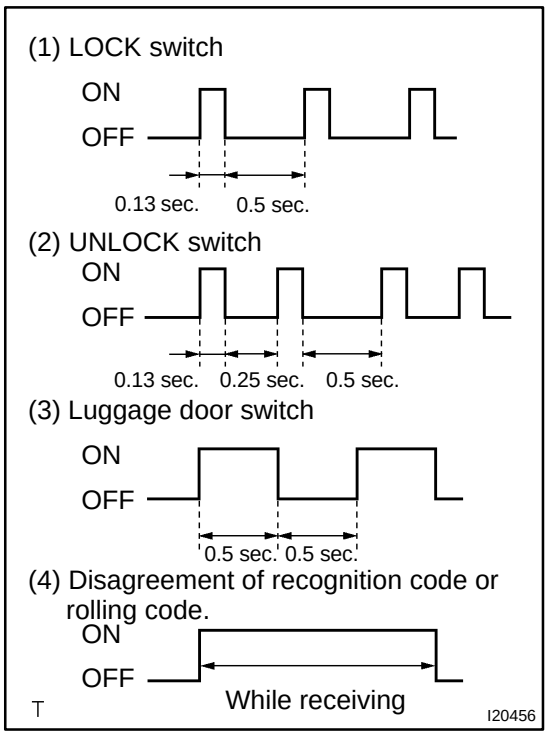

(c) Diagnosis Mode Check.

HINT:

Check how the buzzer sounds when pressing each transmitter switch.

(1) LOCK switch
(2) UNLOCK switch
(3) Luggage door switch
(4) Disagreement of recognition code or rolling code.

HINT:

If (4) is detected in the Diagnosis Check, conduct the recognition code registration.

(5) No response from the buzzer.

HINT:

Conduct the following checks.

- Check the wireless door lock transmitter.
- Check the wireless door lock receiver.

2. INSPECT WIRELESS DOOR LOCK TRANSMITTER OPERATION

HINT:

Refer to "Wireless door lock control receiver and transmitter replacement".

(a) Using a screwdriver, remove the cover.

(b) Remove the battery (lithium battery).

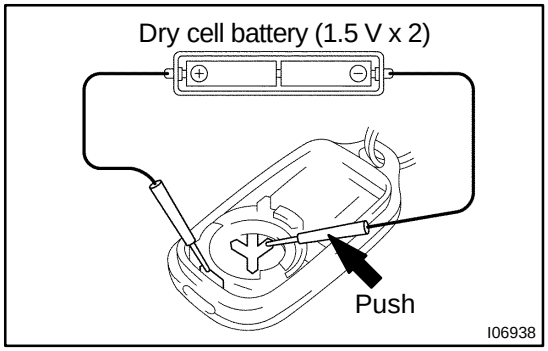

(c) Install a new or normal battery (lithium battery).

HINT:

When a new or normal battery can not be obtained, connect 2 new 1.5 V batteries in series, connect the battery (+) to the battery receptacle side terminal and battery (-) to the bottom terminal, then apply 3 V voltage to the transmitter.

(d) In the location where is approx. 1 M away from driver's outside handle in the right direction, face the key plate of the transmitter to the vehicle, and check the transmitter operation when pressing transmission switch on the side of the transmitter body.

Standard:

- **Remote control of vehicle door lock can be operated.**
- **LED lights up more than once.**

HINT:

- The minimum operation distance differs according to operator, the way of holding, and location.
- As weak wave is used, operation distance might be shortened when noise is detected in strong wave or used frequency.

(e) Install the battery (lithium battery).

3. CHECK BATTERY CAPACITY

HINT:

- Make sure to use the TOYOTA electrical tester.
- With the battery unloaded, judge can not be made whether the battery is available or not on the test.
- When the transmitter is faulty, the energy amount left in the battery might not be checked correctly.
- On the lithium battery used for the transmitter, the voltage more than 2.5 V with the battery unloaded is shown on the tester until the energy is completely consumed.
  Accordingly when inspecting the energy amount left in the battery, it is necessary to measure the voltage when the battery is loaded. (1.2 kΩ).

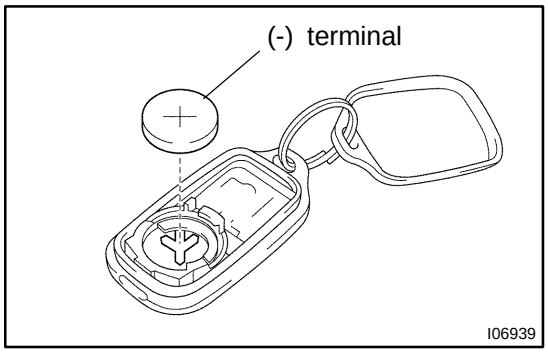

(a) Remove the cover using a (-) driver.
(b) Remove the battery (lithium battery) from the transmitter.
(c) Connect the lead to the (-) terminal of the transmitter and install the battery.

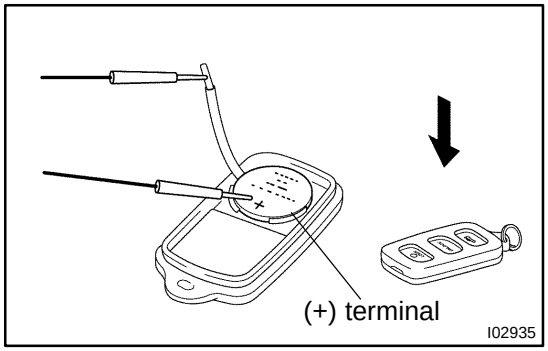

(d) Connect the (+) tester to the (+) battery (lithium battery), and (-) tester to the lead respectively.
(e) Press one of the transmitting switches on the transmitter for approx. 1 second.
(f) Press the transmitting switch on the transmitter again to check the voltage.
Standard: 2.1 V or more

HINT:

- When the temperature of the battery is low, the judge can not be made correctly.
  When the outcome of the test is less than 2.1 V, conduct the test again after leaving the battery in the place at 18 °C for more than 30 minutes.
- By auto power off function, the voltage becomes no load voltage (more than 2.5 V) condition 0.8 seconds after the switch was pressed.
  Make sure to read the voltage before of it.
- High voltage might be shown 1 to 2 times after leaving the battery, judge should be made with the voltage shown at the 3rd time or later.

(g) Disconnect the lead.

(h) Set the battery (lithium battery) in the transmitter.

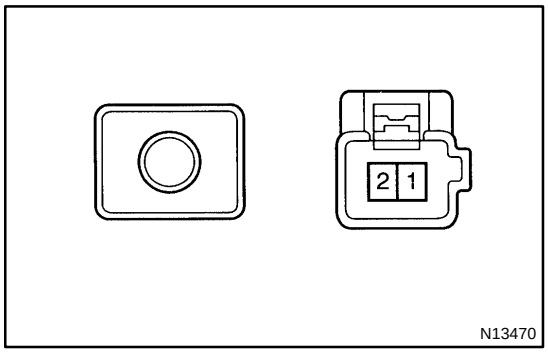

4. INSPECT WIRELESS DOOR LOCK CONTROL CANCEL SWITCH

Switch position	Tester connection	Specified condition
OFF	-	No continuity
ON	1 - 2	Continuity

If continuity is not as specified, replace the switch.

If continuity is as specified, inspect the switch circuit.

5. INSPECT WIRELESS DOOR LOCK CONTROL CANCEL SWITCH CIRCUIT (See page DI-653)

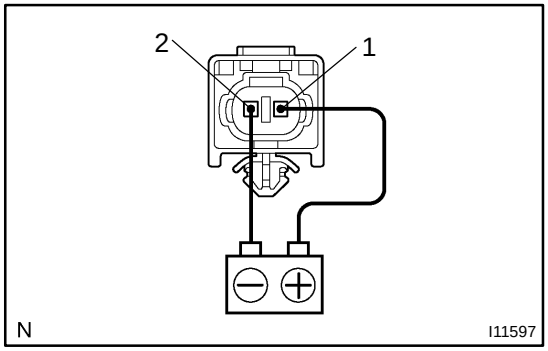

6. INSPECT WIRELESS DOOR LOCK BUZZER OPERATION

Connect the positive (+) lead from the ohmmeter to terminal 1 and the negative (-) lead to terminal 2, and buzzer sounds.

If operation is not as specified, replace the buzzer.

7. INSPECT WIRELESS DOOR LOCK BUZZER CIRCUIT (See page DI-653)

Wire Harness Side

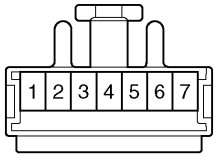

I04152

8. Connector disconnected:
INSPECT WIRELESS DOOR LOCK CONTROL RECEIVER CIRCUIT

Disconnect the connector from the receiver and inspect the connector on the wire harness side, as shown.

Tester connection	Condition	Specified condition
1 - Ground	Constant	Continuity
7 - Ground	Constant	Battery positive voltage

If the circuit is not as specified, inspect the circuit connected to other parts.

From Back Side

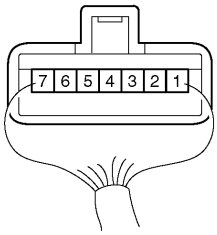

I04153

9. Connector connected:
INSPECT WIRELESS DOOR LOCK CONTROL RECEIVER CIRCUIT

Connect the wire harness side connector to the receiver and inspect the wire harness side connector from the back side, as shown.

Tester connection	Condition	Specified condition
3 - Ground	Ignition switch position OFF Key removed Transmitter OFF → ON	4.5 - 5.5 V → below 1 V
4 - Ground	Ignition switch position OFF Key removed Transmitter OFF	10 - 14 V

If circuit is as specified, replace the receiver.
If the circuit is not as specified, inspect the circuit connected to other parts.

BE1DZ-02

WIRELESS DOOR LOCK CONTROL SYSTEM

LOCATION

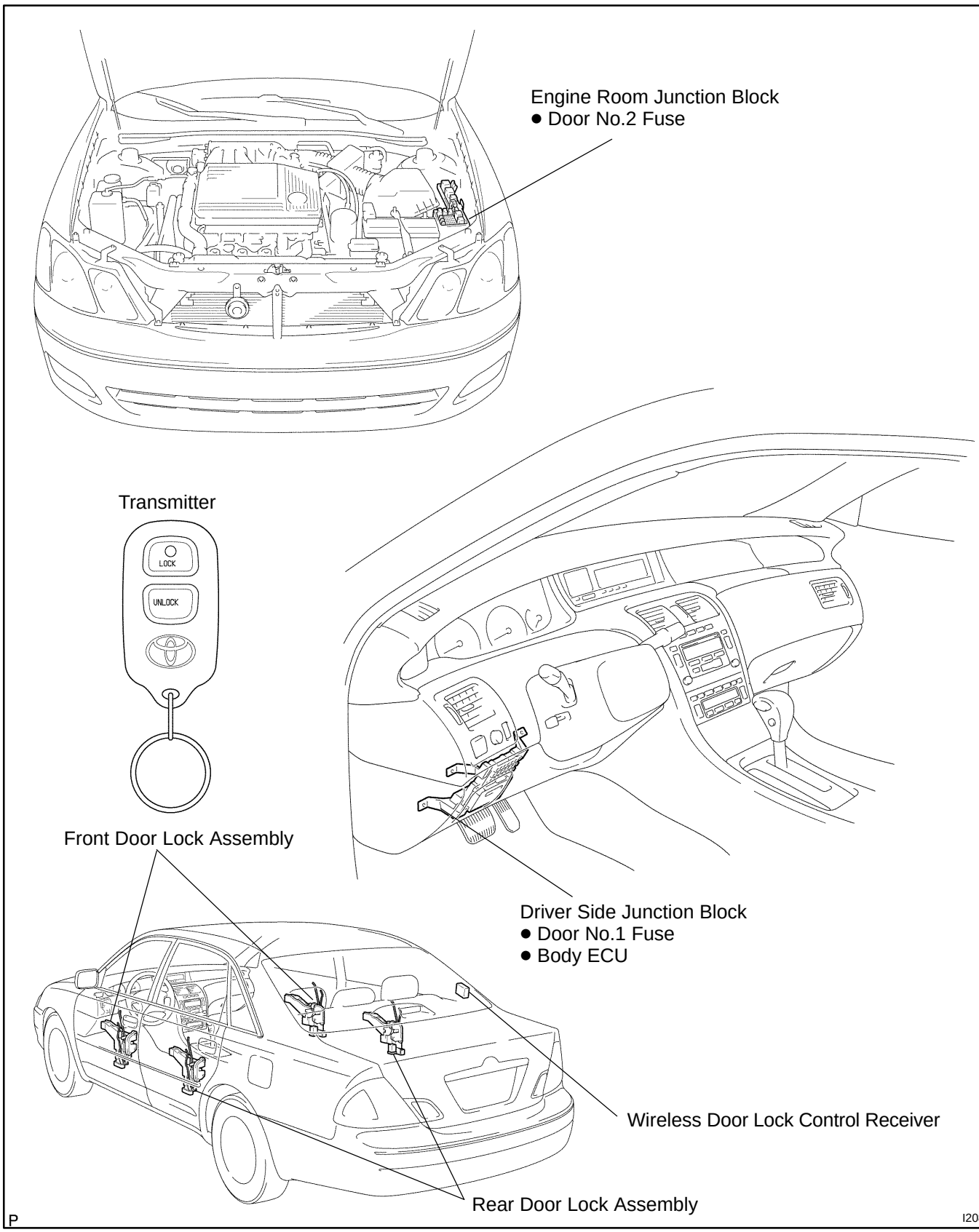

BE217-01

PRE-CHECK

1. CHARACTERS OF WIRELESS DOOR LOCK

(a) The operation distance changes according to how customers hold the transmitter or where it is used.

(b) Because of using the very weak radio wave, if there is a strong wave or noise on the frequency being used, the operation distance may become shorter.

2. WIRELESS DOOR LOCK BASIC FUNCTION

(a) Stand on the driver's side. Stay 1 m away from the vehicle.

(b) Turn the transmitter toward the vehicle and press any one of the transmission switched for 1 sec.

BE2M9-01

REPLACEMENT

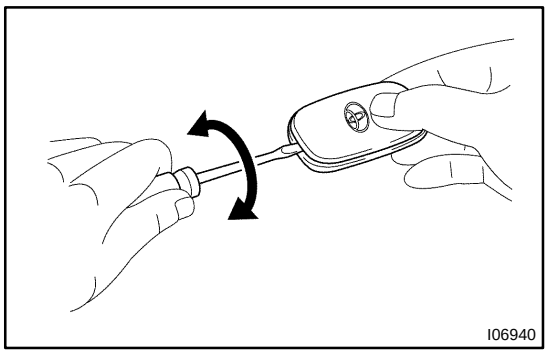

1. REPLACE TRANSMITTER (LITHIUM) BATTERY

NOTICE:

Special caution should be taken for handling each component as they are precision electronic components.

(a) Using a screwdriver, remove the cover.

NOTICE:

Do not pry out the cover forcibly.

HINT:

Push the cover with a finger as shown in the illustration, so that there becomes clearance, then pry out the cover from that clearance.

(b) Remove the transmitter.

(c) Remove the battery (lithium battery).

NOTICE:

Do not push the terminals with a finger.

If prying up the battery (lithium battery) forcibly to remove, the terminals are deformed.

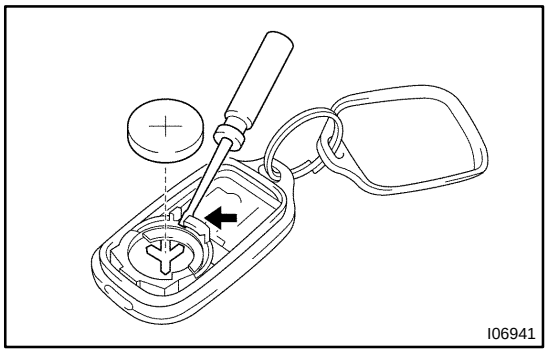

(d) Install a battery (lithium battery) as shown in the illustration.

NOTICE:

Face the battery upward. Take care not to deform the terminals.

(e) Assemble the transmitter to the key plate and the cover.

2. REPLACE DOOR CONTROL RECEIVER AND TRANSMITTER

NOTICE:

When replacing the door control receiver and transmitter, registration of recognition code is necessary because they are provided as a single components.

(a) Select the operation mode to perform from the following operation modes.

Add mode
Rewrite mode
Prohibition mode
Confirmation mode

HINT:

The add mode is used to retain codes already registered while you register new recognition codes. This mode is used when adding a transmitter. However, if the number of registered codes exceeds 4 codes, previously registered codes are correspondingly erased in order, starting from the first registered code.

The rewrite mode is used to erase all previously registered codes and register only new recognition codes.

The prohibition mode is used to erase all registered codes and cancels the wireless door lock function. Use this mode when the transmitter is lost.

The confirmation mode is for confirming few many recognition codes ar already registered before you register additional recognition codes.

(b) Follow the chart on the following page to register the transmitter recognition code at the wireless door lock control receiver.

HINT:

When procedure is out of the specified, the operation returns to normal operation.

Maximum 4 recognition codes can be registered.

Start registration of recognition code

The vehicle should be in the following conditions.
- The key is not inserted in the ignition key cylinder.
- Driver's door is OPEN. (Other doors are CLOSED)
- Driver's door is UNLOCKED. (Other doors are CLOSED)

Insert the key into the ignition key cylinder, then pull it out.

Within 40 secs.

Press the door lock control switch (for manual operation) 5 times to LOCK/UNLOCK at approx. 1 sec. interval.

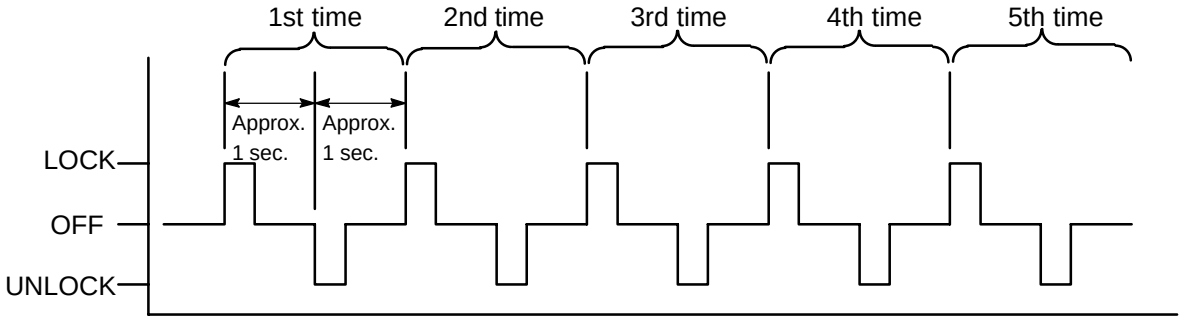

Close the driver's door, then open it.

Within 40 secs.

Again press the door lock control switch (for manual operation) 5 times to LOCK/UNLOCK at approx. 1 sec. interval.

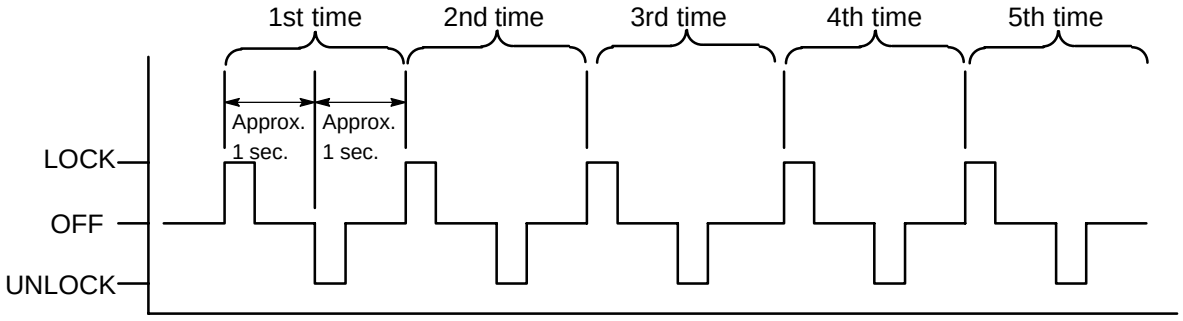

Insert the key into the ignition key cylinder.

Turn the ignition switch from ON to LOCK at approx. 1 sec. interval 1 to 5 times to select the mode.

Add mode

ON - LOCK change occurs 1 time

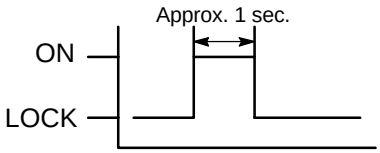

Confirmation mode

ON - LOCK change occurs 3 times

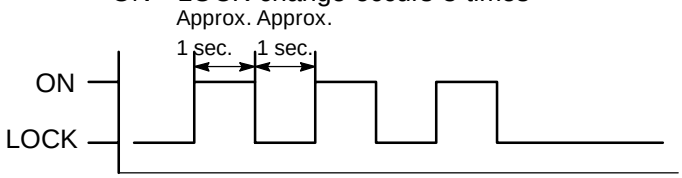

Rewrite mode

ON - LOCK change occurs 2 times

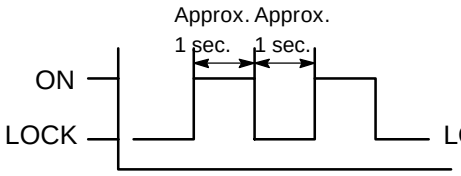

Prohibition mode

ON - LOCK change occurs 5 times

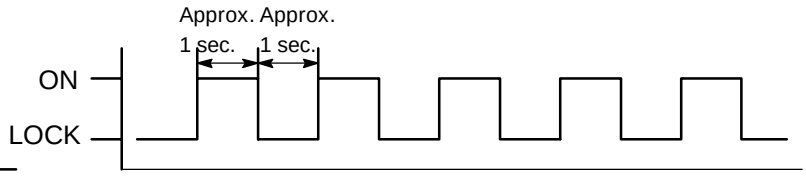

Pull out the key plate from the ignition key cylinder.

Within 3 secs.

When add mode or rewrite mode is selected.

MPX body ECU automatically performs the LOCK-UNLOCK operation once or twice at 1 sec, interval to inform the operator that either the add mode or rewrite mode has been selected.

LOCK-UNLOCK occurs once

Indicates that add mode has been selected.

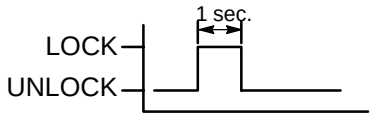

LOCK-UNLOCK occurs twice

Indicates that rewrite mode has been selected.

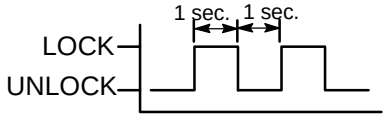

When prohibition mode is selected.

When confirmation mode is selected.

MPX body ECU automatically performs the LOCK-UNLOCK operation 1 to 4 times at 2 sec. interval to inform the operator of the number of the registered codes.
HINT:
When the number of the registered code is 0, the operation is automatically performed 5 times.

Example:
When the operation is performed twice, it directs that 2 type of recognition code have been registered.

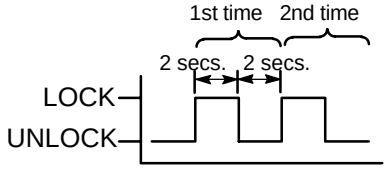

Registration of recognition code (Confirmation mode and probation mode) is completed.

When prohibition mode is selected.

MPX body performs operates LOCK-UNLOCK operation 5 times at a 1 sec. interval to inform the operator that prohibition mode has been selected.

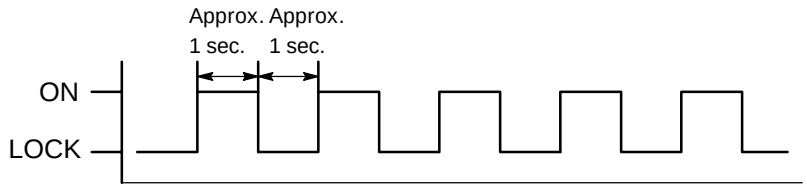

Within 40 secs.

Press the lock and unlock switches on the transmitter simultaneously within 1.5 sec.

Within 3 secs.

Press again either of switches on the transmitter.

Within 3 secs.

MPX body ECU automatically performs LOCK-UNLOCK operation once or twice at a 1 sec. interval to inform the operator that it has received the signal from the transmitter.

LOCK-UNLOCK occurs once

Registration of recognition code is completed

LOCK-UNLOCK occurs twice

Registration of recognition code has not been completed.

- Recognition code received first time and second time did not match.

If they are not performed, the mode returns to the normal mode, then start with "Start registration of recognition code".

Proceed to finish registration

Proceed to continue registration

Within 40 secs.

If even one of the following conditions is satisfied, registration of recognition codes in completed.

- 40 secs. elapses since the MPX body ECU response.
- The driver's door is closed.
- The key plate is inserted in the ignition key cylinder.
- 4 types recognition codes are registration at one time.

Registration of recognition codes (add mode or rewrite mode) is completed.

BODY OUTSIDE MOULDING

BO0Y6-03

COMPONENTS

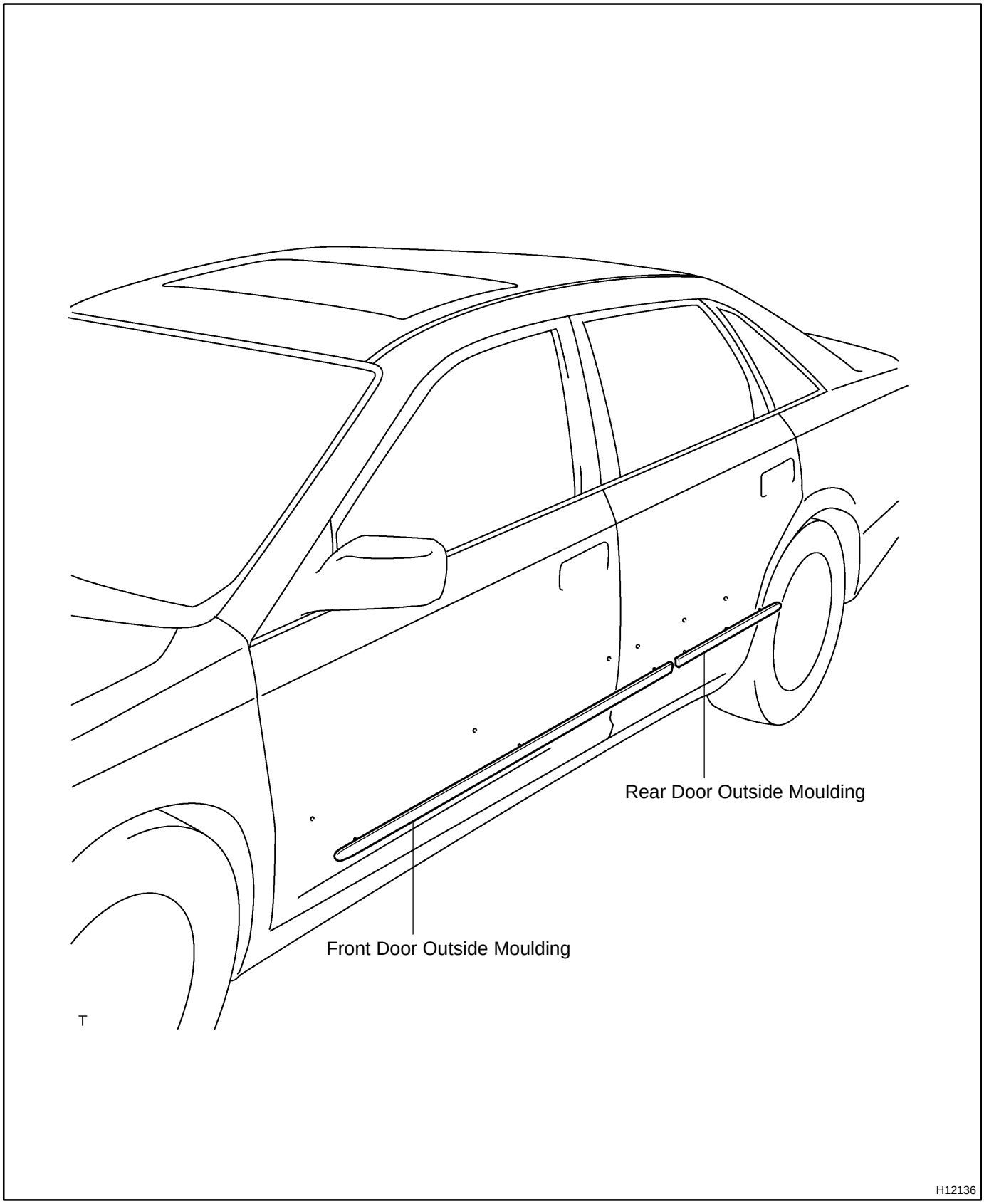

BO0Y8-03

INSTALLATION

1. CLEAN BODY MOUNTING SURFACE

(a) Using a heat light, heat the body mounting surface to 40 - 60 ˚C (104 - 140 ˚F).

NOTICE:

Do not heat the body excessively.

(b) Remove the adhesive tape from the body.

(c) Wipe off stains with cleaner.

2. CLEAN MOULDING

If reusing moulding:

(a) Using a heat light, heat the moulding to 20 - 30 ˚C (68 - 86 ˚F).

NOTICE:

Do not heat the moulding excessively.

(b) Remove the adhesive tape from the moulding.

(c) Wipe off stains with cleaner.

(d) Apply a new adhesive tape to the moulding as shown in the illustration.

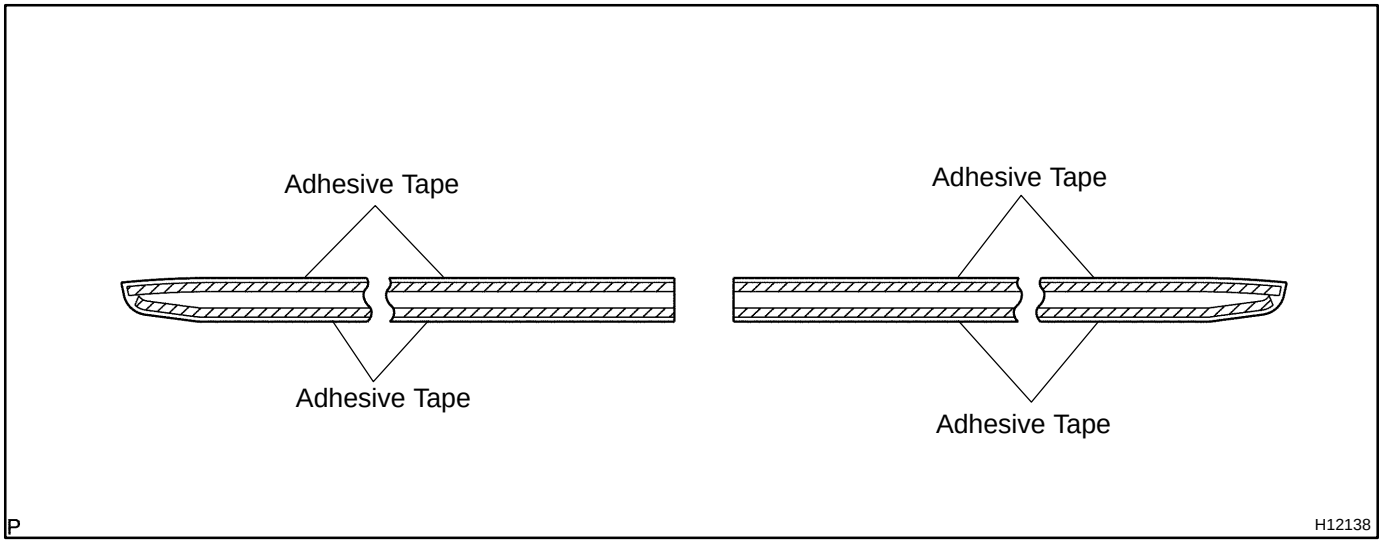

3. INSTALL MOULDING

(a) Using a heat light, heat the body and moulding.

Body: 40 - 60 ˚C (104 - 140 ˚F)

Moulding: 20 - 30 ˚C (68 - 86 ˚F)

NOTICE:

Do not heat the moulding excessively.

(b) Lift the moulding release sheet from the face of moulding.

NOTICE:

When the moulding release sheet is removed, make sure that no dirt or dust can get onto the coated area.

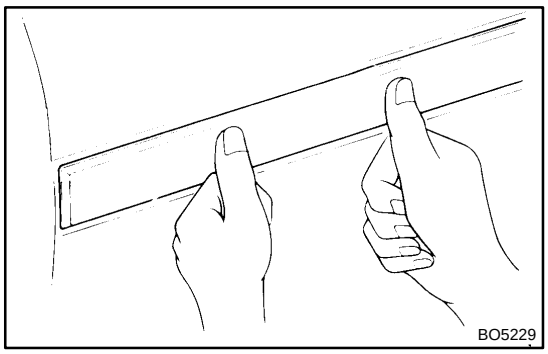

(c) Align the bosess with their corresponding holes in the body, and press firmly on the moulding.

NOTICE:

Do not apply excessive force onto the moulding, but steady pressure with your thumbs.

BO0Y7-03

REMOVAL

1. HEAT MOULDING

Using a heat light, heat the moulding to 40 - 60 ˚C (104 - 140 ˚F).

NOTICE:

Do not heat moulding excessively.

2. REMOVE OUTSIDE MOULDING

(a) Tie both piano wire ends to wooden blocks or similar objects.

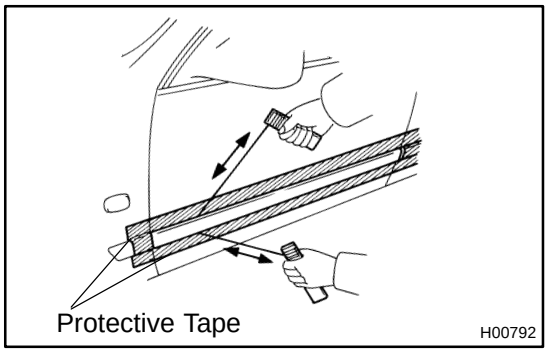

(b) Cut the adhesive tape by pulling the piano wire as shown.

NOTICE:

★ **If reusing the moulding, take care not to damage the moulding.**

★ **Do not damage the body.**

(c) Remove the moulding.

BACK WINDOW GLASS

COMPONENTS

BO2PK-01

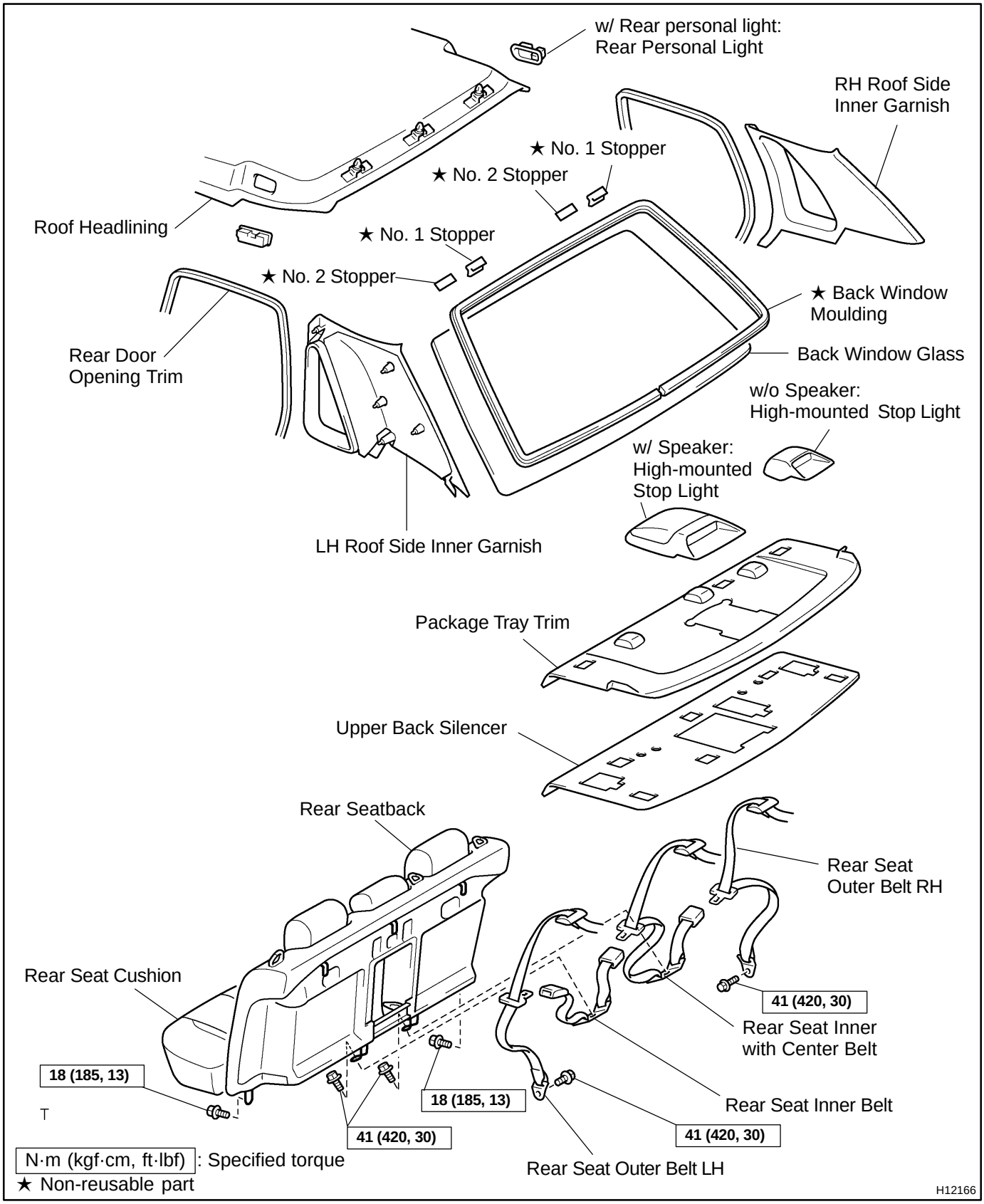

BO2PM-01

INSTALLATION

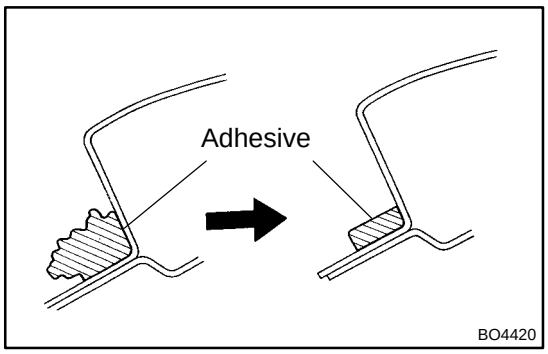

1. CLEAN AND SHAPE CONTACT SURFACE OF BODY

(a) Using a knife, cut away any rough areas on the body.

HINT:

Leave of the adhesive on the body as much as possible.

(b) Clean the cut surface of the adhesive with a shop rag saturated in cleaner.

HINT:

Even if all the adhesive has been removed, clean the body.

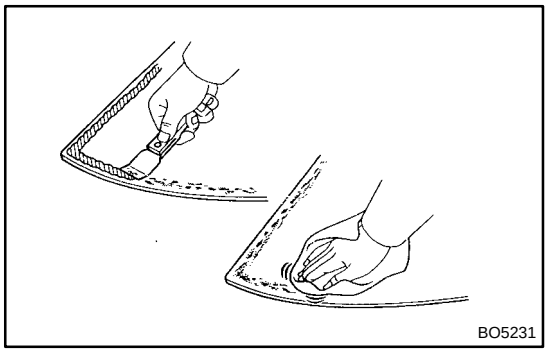

2. CLEAN REMOVED GLASS

(a) Remove the damaged No. 2 stoppers.

(b) Using a scraper, remove the adhesive sticking to the glass.

(c) Clean the glass with cleaner.

NOTICE:

★ **Be careful not to damage the glass.**

★ **Do not touch the glass face after cleaning it.**

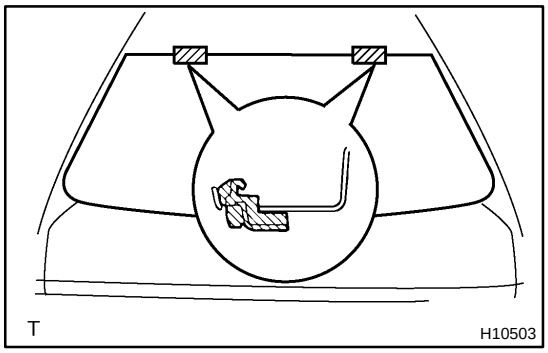

3. REPLACE NO. 1 STOPPERS

(a) Remove the damaged stoppers.

(b) Cut off the old adhesive around the stopper installation area.

NOTICE:

Be careful not to damage the body.

(c) Clean the installation area.

(d) Attach new stoppers to the body so that the notches on the body will align with the stoppers as shown in the illustration.

HINT:

Make sure that the stoppers are installed facing the correct direction.

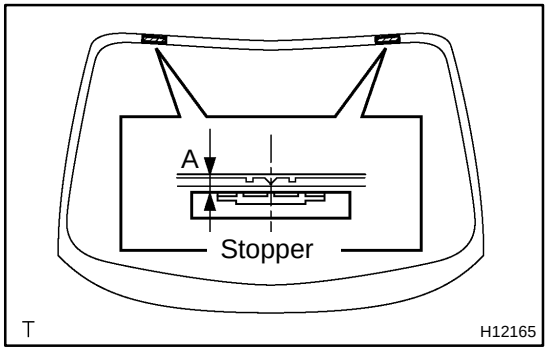

4. INSTALL NEW NO. 2 STOPPERS

Attach new stoppers to the glass so that the ceramic notches on the glass will align with the stoppers as shown in the illustration.

A: 12 mm (0.47 in.)

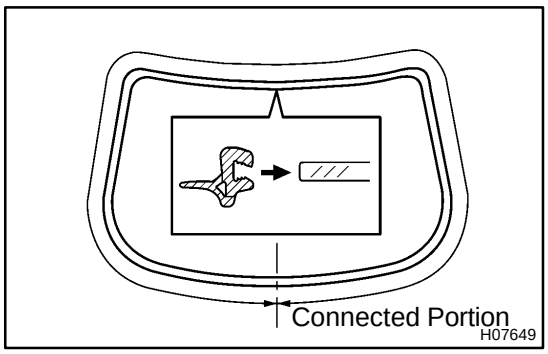

5. INSTALL NEW BACK WINDOW OUTSIDE MOULDING

Install new back window outside moulding to the back window glass as shown in the illustration.

HINT:

★ Install the back window outside moulding from the center of the glass at the lower side of the vehicle.

★ When installing the back window outside moulding, do not stretch it.

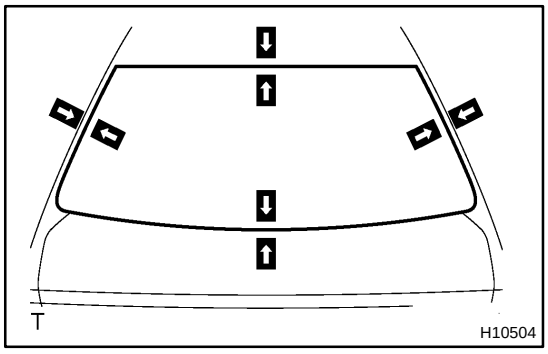

6. POSITION GLASS

(a) Place the glass in the correct position.

(b) Check that all contacting parts of the glass rim are set perfectly even.

(c) Place reference marks on the glass and body.

(d) Remove the glass.

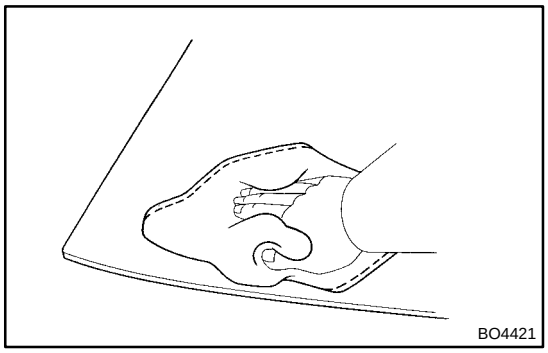

7. CLEAN CONTACT SURFACE OF GLASS

Using a cleaner, clean the contact surface which is black-colored area around the entire glass rim.

NOTICE:

Do not touch the glass face after cleaning it.

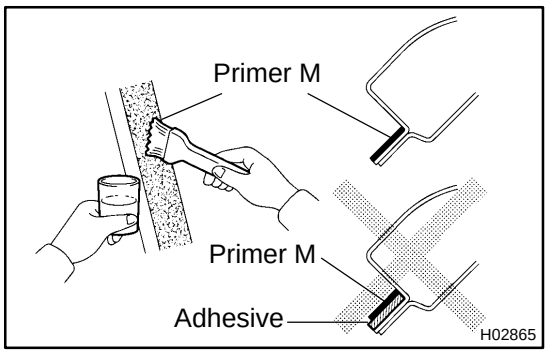

8. COAT CONTACT SURFACE OF BODY WITH PRIMER "M"

Using a brush, coat Primer M to the exposed part of body on the vehicle side.

NOTICE:

★ **Allow 3 minutes or more dry the primer coated surface.**

★ **Do not coat Primer M to the adhesive.**

★ **Do not keep any of the opened Primer M for later use.**

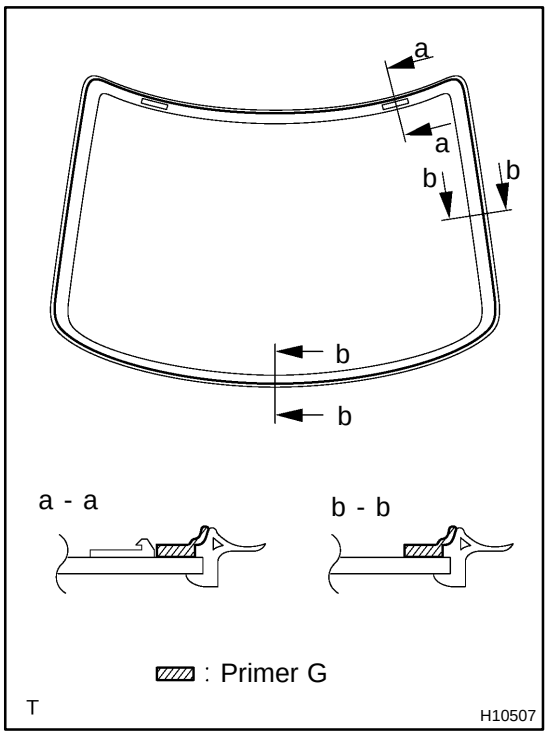

9. COAT CONTACT SURFACE OF GLASS WITH PRIMER "G"

(a) Using a brush or sponge, coat the edge of the glass and the contact surface with Primer G as shown in the illustration.

(b) When the primer is applied by mistake to the area other than the specified, wipe it off with a clean shop rag before the primer dries.

NOTICE:

★ **Allow 3 minutes or more dry the primer coated surface.**

★ **Do not keep any of the opened Primer G for later use.**

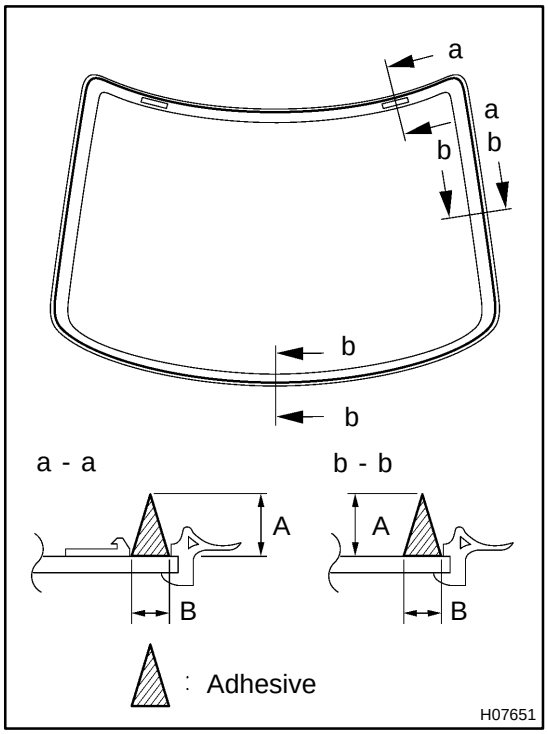

10. APPLY ADHESIVE

(a) Cut off the tip of the cartridge nozzle.
Part No. 08850-00801 or equivalent

HINT:
After cutting off the tip, use all adhesive within the time described in the table below.

Temperature	Tackfree time
35 ˚C (95 ˚F)	15 minutes
20 ˚C (68 ˚F)	100 minutes
5 ˚C (41 ˚F)	8 hours

(b) Load the cartridge into the sealer gun.

(c) Coat the glass with adhesive as shown in the illustration.
A: 13.5 mm (0.531 in.)
B: 8.0 mm (0.315 in.)

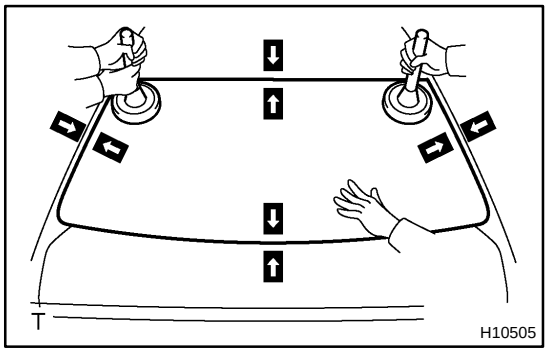

11. INSTALL GLASS

(a) Position the glass so that the reference marks are lined up, and press in gently along the rim.

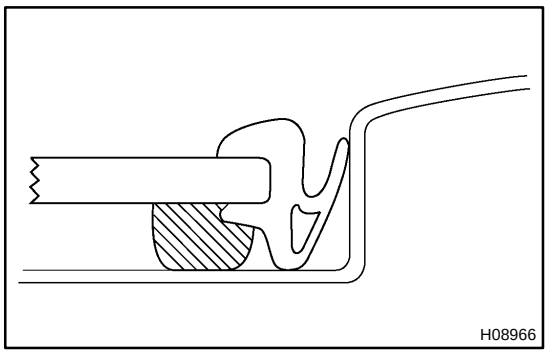

HINT:

Confirm that the moulding is attached to the body panel as shown in the illustration.

(b) Hold the back window glass in place securely with a protective tape or equivalent until the adhesive hardens.

NOTICE:

Take care not to drive the vehicle during the time described in the table below.

Temperature	Minimum time prior to driving the vehicle
35 ˚C (95 ˚F)	1.5 hours
20 ˚C (68 ˚F)	5 hours
5 ˚C (41 ˚F)	24 hours

12. INSPECT FOR LEAK AND REPAIR

NOTICE:

Conduct a leak test after hardening time has elapsed.

13. CONNECT DEFOGGER WIRE CONNECTOR

14. INSTALL ROOF HEADLINING

15. w/ Rear personal light:
INSTALL REAR PERSONAL LIGHT

16. INSTALL UPPER BACK SILENCER

17. INSTALL PACKAGE TRAY TRIM

18. INSTALL HIGH-MOUNTED STOP LIGHT

19. INSTALL ROOF SIDE INNER GARNISH

20. INSTALL REAR SEAT (See page BO-123)

BO2PL-01

REMOVAL

1. REMOVE REAR SEAT (See page BO-120)

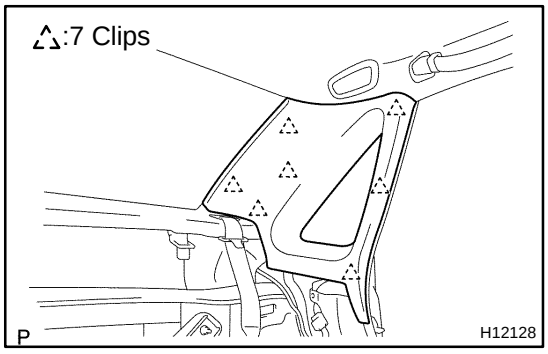

2. REMOVE ROOF SIDE INNER GARNISH

(a) Using a screwdriver, remove the roof side inner garnish.

HINT:

Tape the screwdriver tip before use.

(b) Employ the same manner described above to the other side.

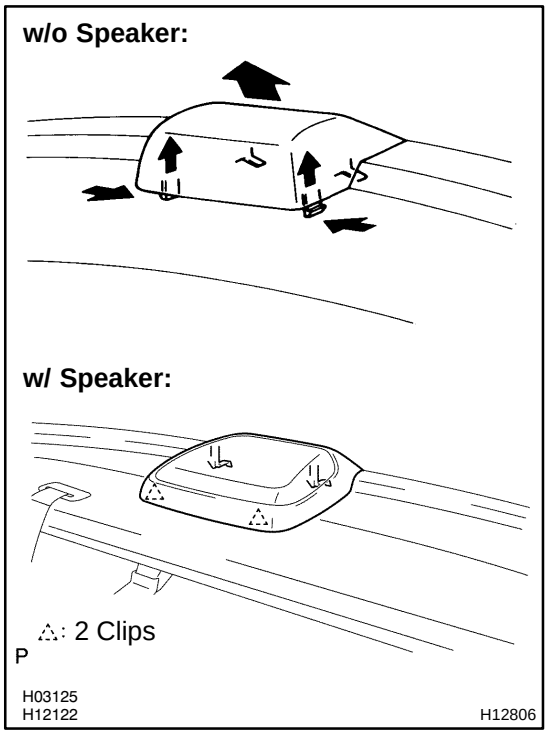

3. REMOVE HIGH-MOUNTED STOP LIGHT

Remove the high-mounted stop light as shown in the illustration, then disconnect the connector.

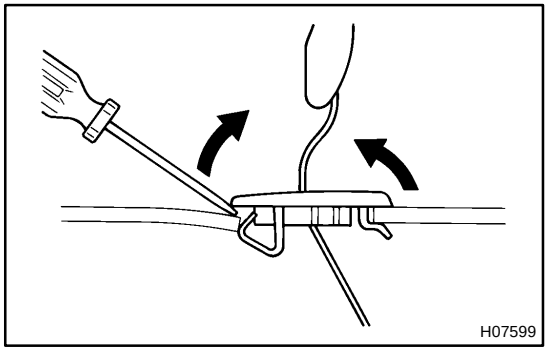

4. REMOVE PACKAGE TRAY TRIM

(a) Using a screwdriver, remove the 3 rear seat belt bezel.

HINT:

Tape the screwdriver tip before use.

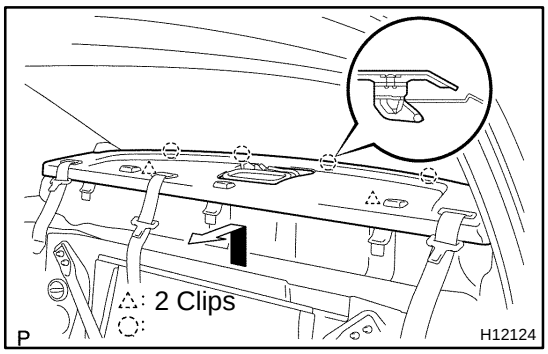

(b) Remove the package tray trim as shown in the illustration.

5. REMOVE UPPER BLACK SILENCER

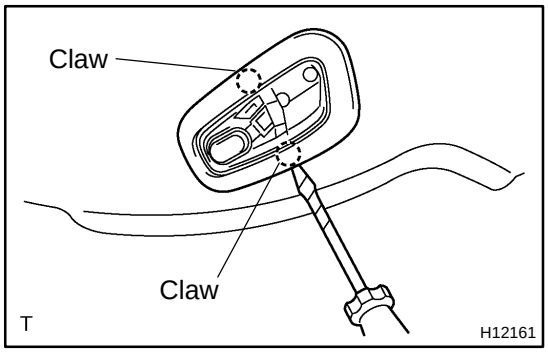

6. w/ Rear personal light:
REMOVE REAR PERSONAL LIGHT

(a) Using a screwdriver, remove the rear personal light, then disconnect the connector.

HINT:
Tape the screwdriver tip before use.

(b) Employ the same manner described above to the other side.

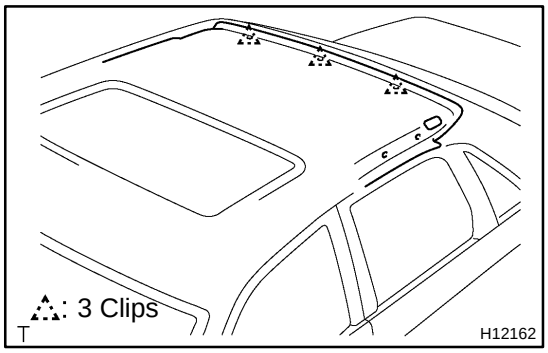

7. REMOVE ROOF HEADLINING

Disengage the 3 clips and remove the rear side of roof headlining.

8. DISCONNECT DEFOGGER WIRE CONNECTOR

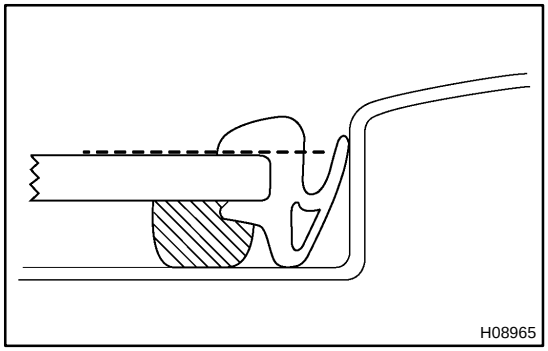

9. REMOVE BACK WINDOW MOULDING

(a) Using a knife, cut off the moulding as shown.

NOTICE:
Do not damage the body with the knife.

(b) Remove the remaining moulding.

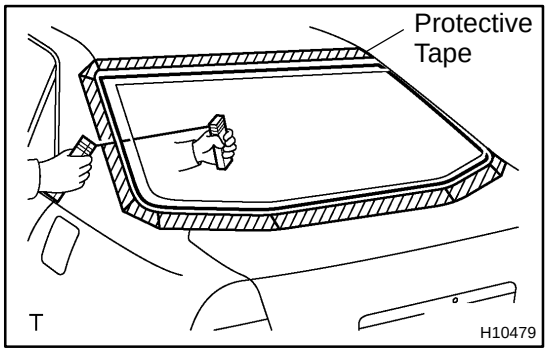

10. REMOVE BACK WINDOW GLASS

(a) Insert a piano wire between body and glass and let it pass through.

(b) Tie both wire ends to wooden blocks or similar objects.

HINT:
Apply protective tape to the outer surface to keep the surface from being scratched.

NOTICE:
When separating the glass, take care not to damage the paint and exterior.

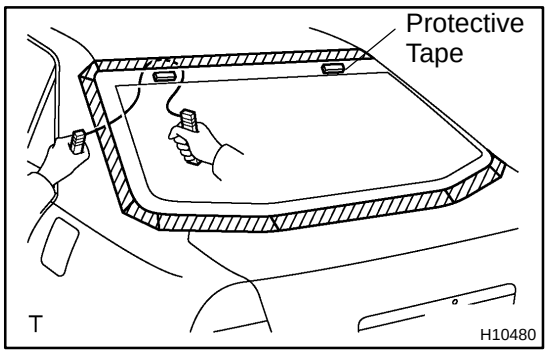

(c) Cut the adhesive by pulling the piano wire around it.

HINT:

Cut the adhesive areas as shown in the illustration, leaving the adhesive where the stoppers are.

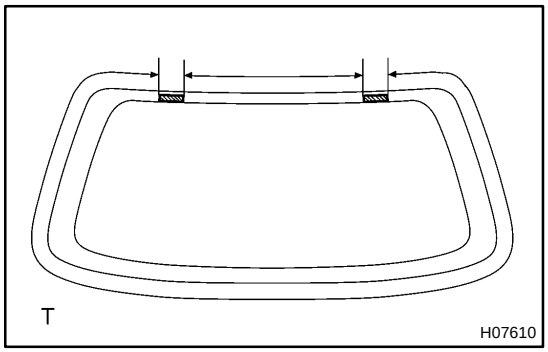

(d) Let the piano wire pass as shown in the illustration, cut off the adhesive sticking to the stoppers.

NOTICE:

Do not damage the glass stoppers.

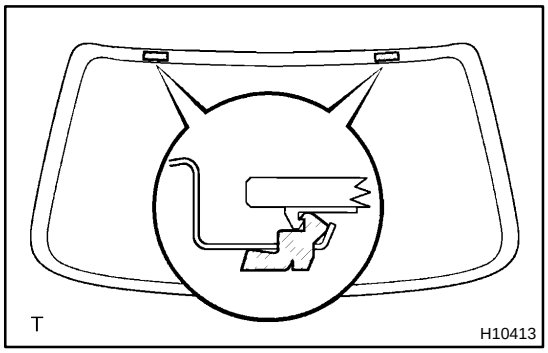

(e) Disengage the stoppers, then remove the glass.

NOTICE:

Leave of the adhesive on the body as much as possible when cutting off the glass.

CLIP

BO0XH-02

REPLACEMENT

The removal and installation methods of typical clips used in body parts are shown in the table below.
HINT:
If the clip is damaged during the operation, always replace it with a new clip.

Shape (Example)	Removal/Installation
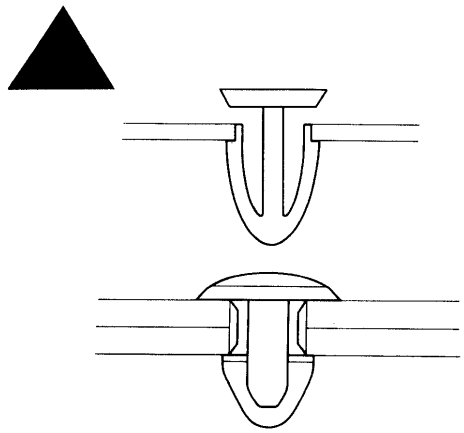	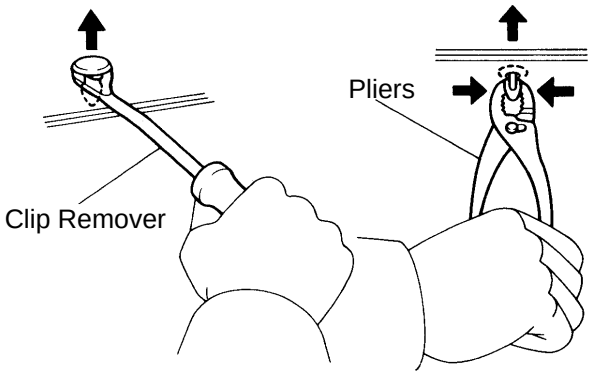
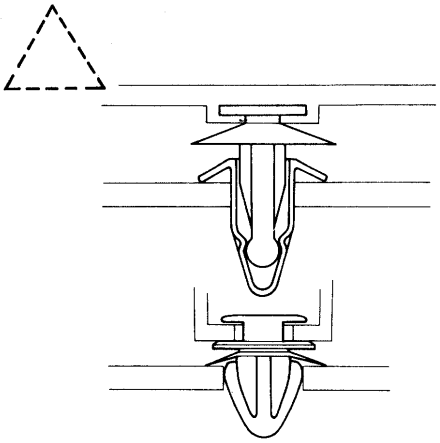	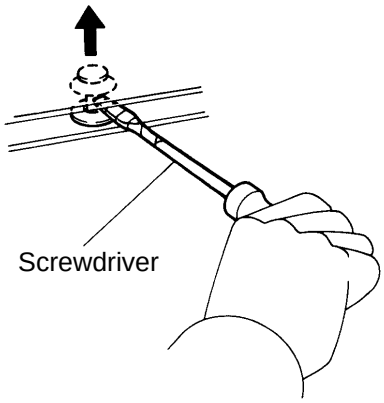
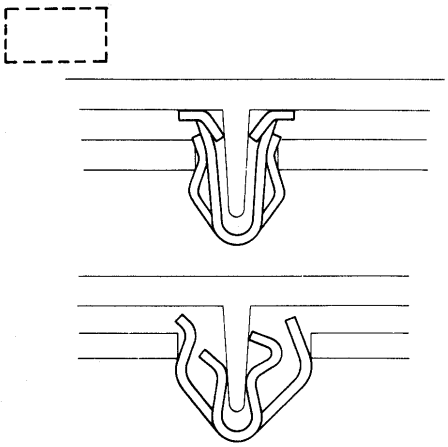	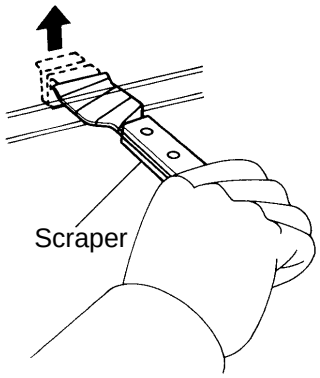

V00005

Shape (Example)	Removal/Installation
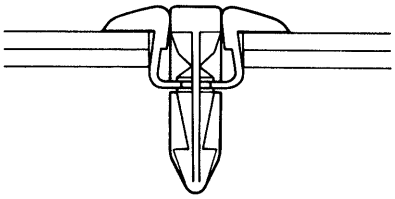	Removal Installation 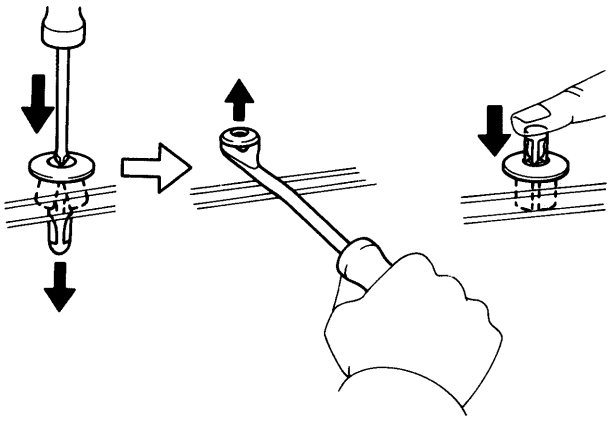
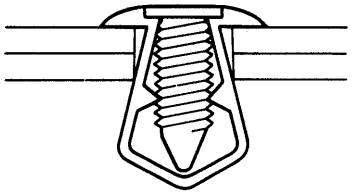	Removal Installation 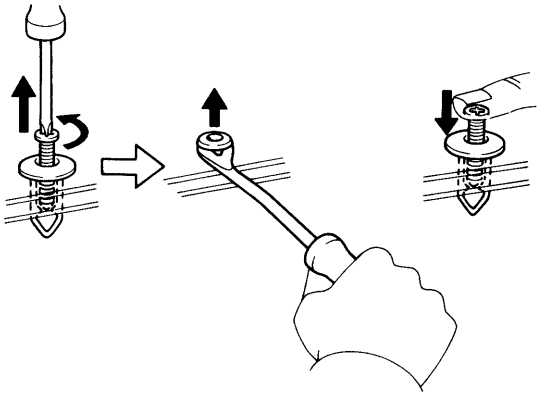

V00012

FRONT BUMPER

COMPONENTS

BO0XJ-04

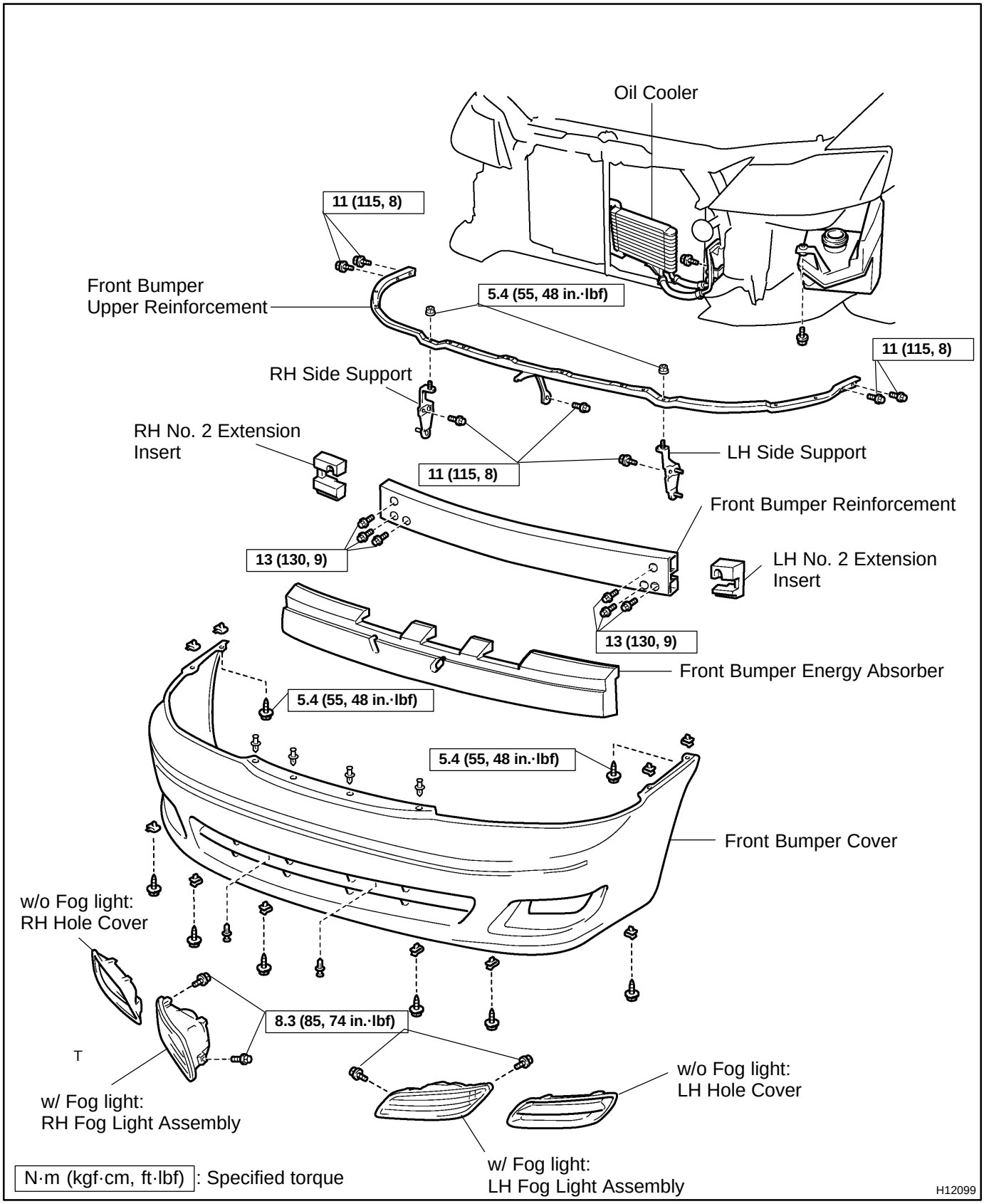

BO2OQ-01

ADJUSTMENT

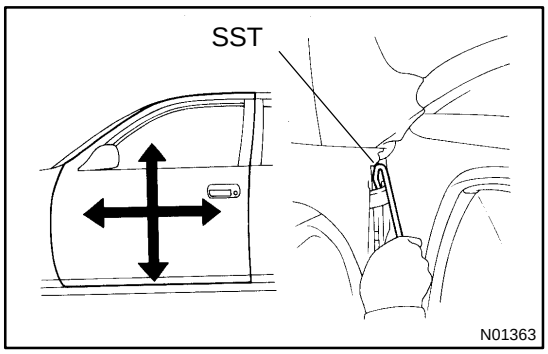

1. ADJUST DOOR IN FORWARD/REARWARD AND VERTICAL DIRECTIONS

Using SST, loosen the body side hinge bolts to adjust.

SST 09812-00010

Torque: 25 N·m (260 kgf·cm, 19 ft·lbf)

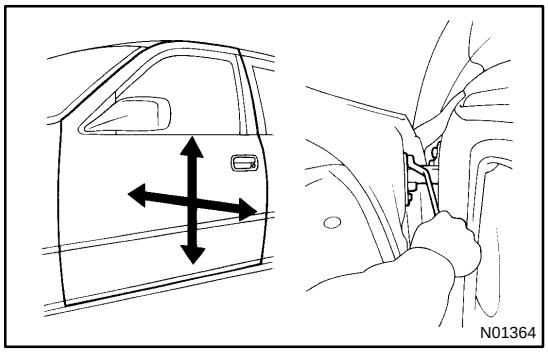

2. ADJUST DOOR IN LEFT/RIGHT AND VERTICAL DIRECTIONS

Loosen the door side hinge bolts to adjust.

HINT:

Substitute the bolt with washer for the centering bolt.

Torque: 25 N·m (260 kgf·cm, 19 ft·lbf)

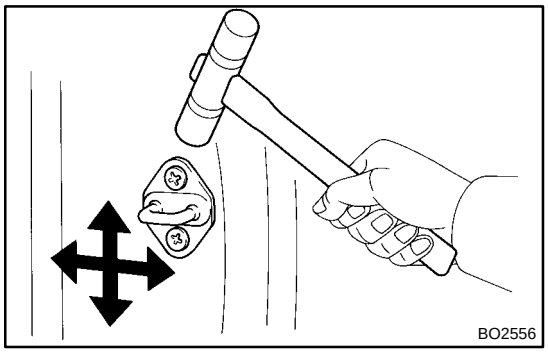

3. ADJUST DOOR LOCK STRIKER

(a) Check that the door fit and door lock linkages are adjusted correctly.

(b) Loosen the striker mounting screws.

Torque: 23 N·m (230 kgf·cm, 17 ft·lbf)

(c) Using a plastic hammer, tap the striker to adjust it.

FRONT DOOR

COMPONENTS

BO2OO-01

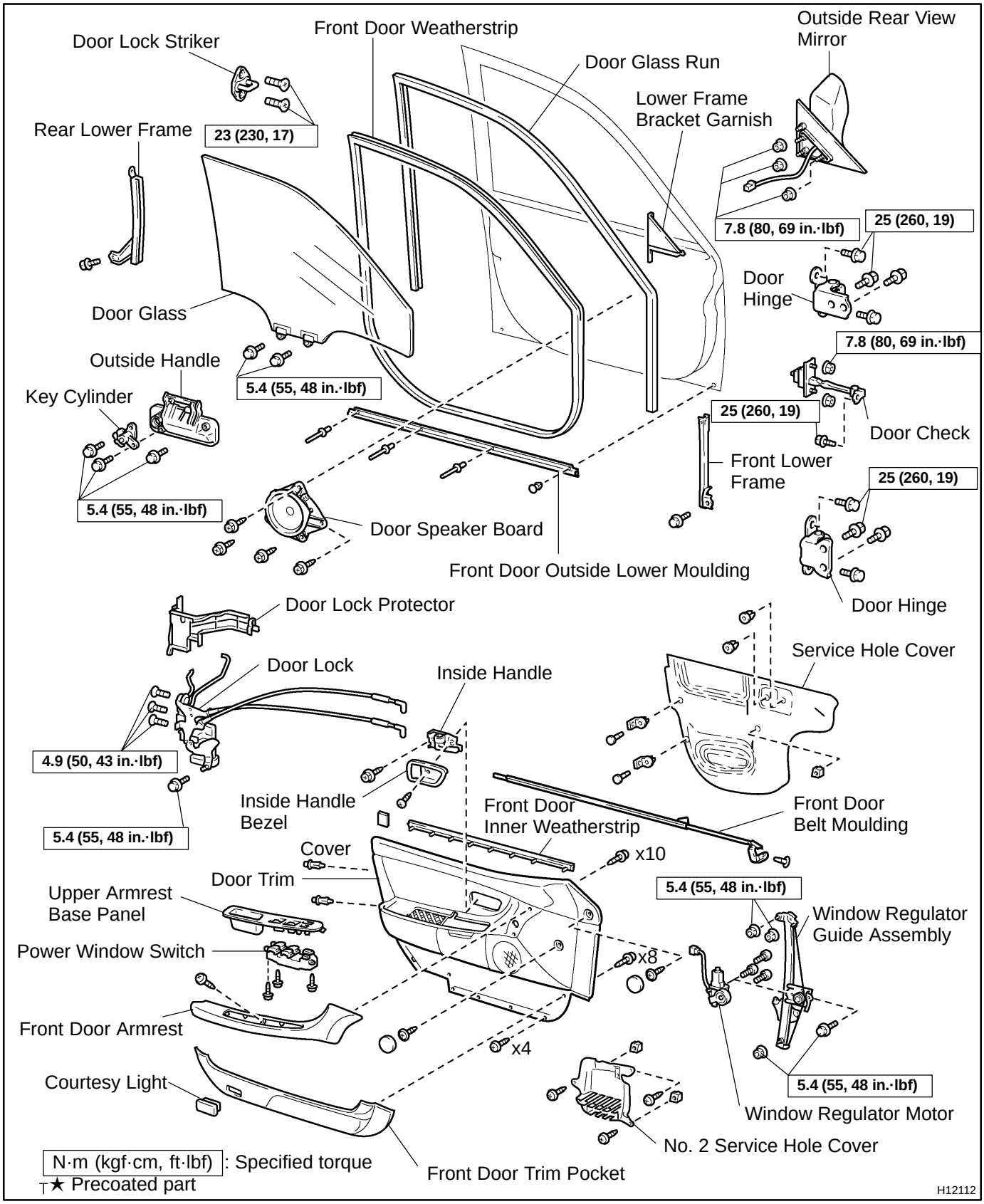

BO2OP-01

DISASSEMBLY

1. REMOVE INSIDE HANDLE BEZEL

(a) Using a screwdriver, remove the cover.

HINT:

Tape the screwdriver tip before use.

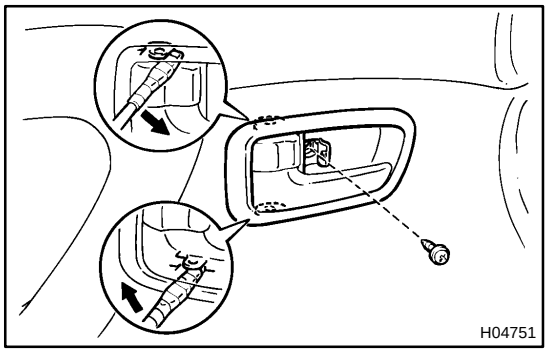

(b) Remove the screw.

(c) Using a screwdriver, remove the inside handle bezel as shown in the illustration.

HINT:

Tape the screwdriver tip before use.

2. REMOVE COURTESY LIGHT

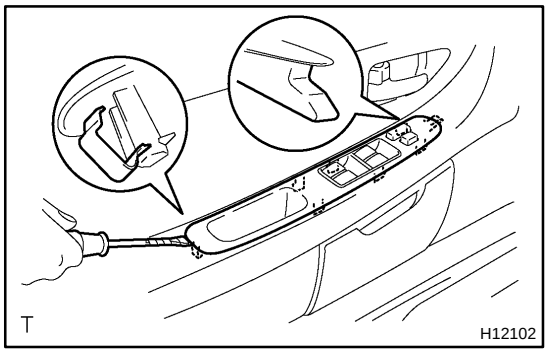

3. REMOVE UPPER ARMREST BASE PANEL WITH POWER WINDOW SWITCH

(a) Using a screwdriver, remove the upper armrest base panel with power window switch.

HINT:

Tape the screwdriver tip before use.

(b) Disconnect the connector.

(c) Remove the 3 screws and power window switch from the upper armrest base panel.

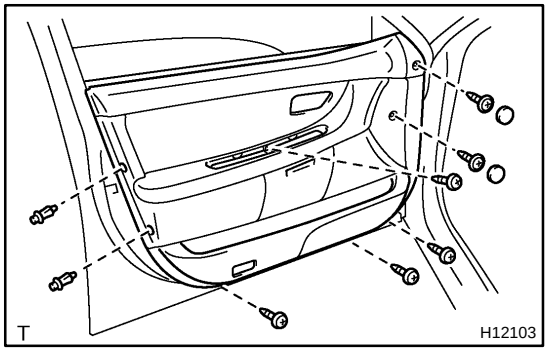

4. REMOVE DOOR TRIM

(a) Using a screwdriver, remove the 2 caps.

HINT:

Tape the screwdriver tip before use.

(b) Remove the 6 screws and clip.

(c) Pull the trim upward to remove it.

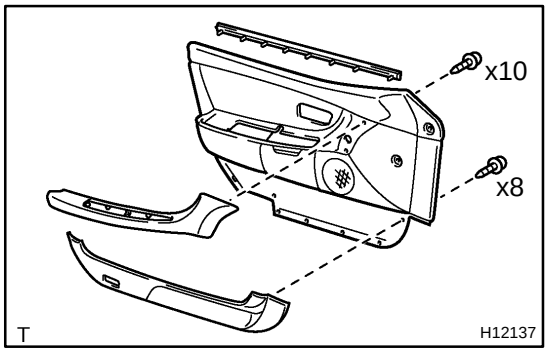

(d) Using a screwdriver, remove the front door inner weatherstrip from the front door trim.

(e) Remove the 10 screws and front door armrest from the front door trim.

(f) Remove the 8 screws and front door trim pocket from the front door trim.

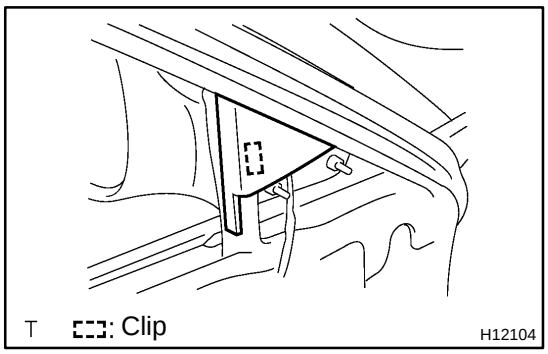

5. REMOVE LOWER FRAME BRACKET GARNISH

Using a screwdriver, remove the lower frame bracket as shown in the illustration.

HINT:

Tape the screwdriver tip before use.

6. REMOVE OUTSIDE REAR VIEW MIRROR

Torque: 7.8 N·m (80 kgf·cm, 69 ft·lbf)

7. REMOVE DOOR SPEAKER BOARD

8. REMOVE INSIDE HANDLE

(a) Remove the screw.

(b) Slide the inside handle backward to remove it.

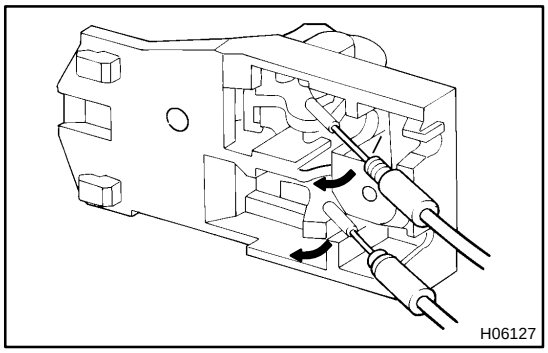

(c) Disconnect the 2 cables from the inside handle as shown in the illustration.

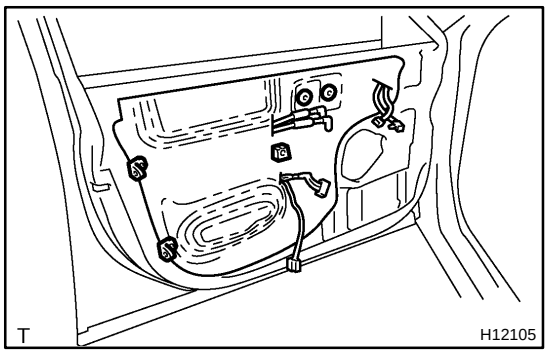

9. REMOVE SERVICE HOLE COVER

(a) Using a clip remover, remove the grommets.

(b) Remove the service hole cover.

NOTICE:

Do not tear the cover.

HINT:

At the time of reassembly, please refer to the following item.

Bring out the 2 control cables and wire harness through the service hole cover.

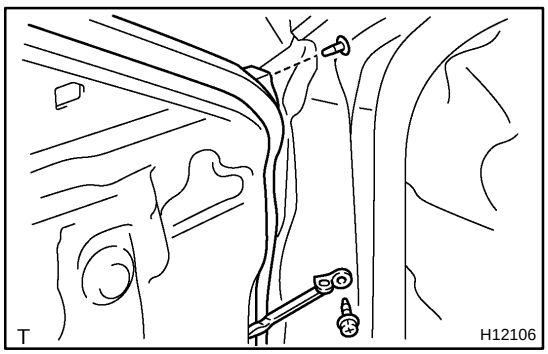

10. REMOVE FRONT DOOR WEATHERSTRIP

(a) Using a clip remover, remove the clip.

(b) Remove the screw from the door check.

(c) Using a clip remover, remove the front door weatherstrip.

(d) Reinstall the screw to the door check.

Torque: 25 N·m (260 kgf·cm, 19 ft·lbf)

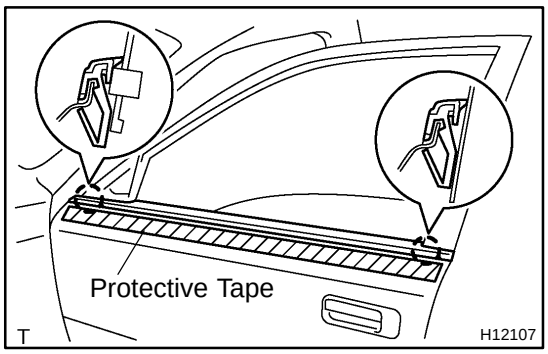

11. REMOVE FRONT DOOR BELT MOULDING

(a) Apply protective tape to the outer surface as shown in the illustration, to keep the surface from being scratched.

(b) Using a moulding remover, remove the front door belt moulding.

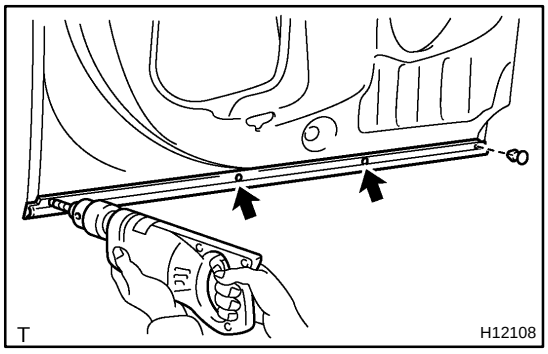

12. REMOVE FRONT DOOR OUTSIDE LOWER MOULDING

(a) Using a drill of less than ø3.2 mm (0.126 in.), drill out the 3 rivet heads.

HINT:

Gently and vertically put the drill to the rivets, and cut the rivet flanges.

CAUTION:

Take care as the cut rivets are hot.

NOTICE:

Prizing the hole with a drill can lead to damage to the rivet hole or the drill itself.

(b) Using a clip remover, remove the clip.

(c) Remove the front door outside lower moulding.

(d) Using a vacuum cleaner, remove the drilled rivets and accociated metallic dust from the inside of door panel.

HINT:

At the time of reassembly, please refer to the following item.

Using an air riveter with nose piece No. 1 or a hand riveter with nose piece No. 1 to install new 3 rivets to the front door outside lower moulding.

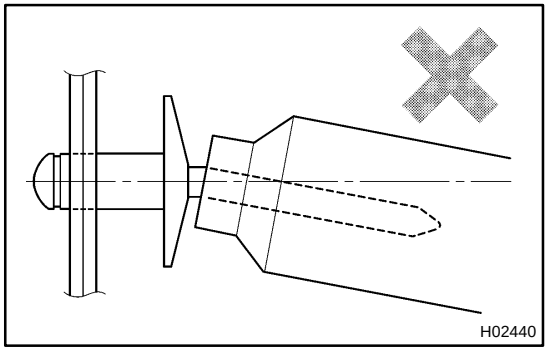

NOTICE:

- ★ **At the time of reassembly, please refer to the following items.**
- ★ **Do not prize a riveter, as riveter is damaged, it is not tightened and the mandrel is bent.**

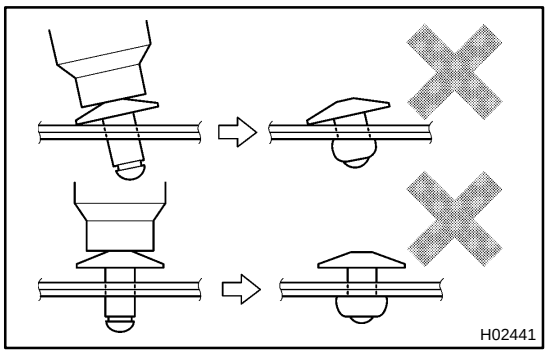

★ **Do not tilt the riveter disconnect the rivet from the material while handling a riveter, as the materials are not tightened firmly.**

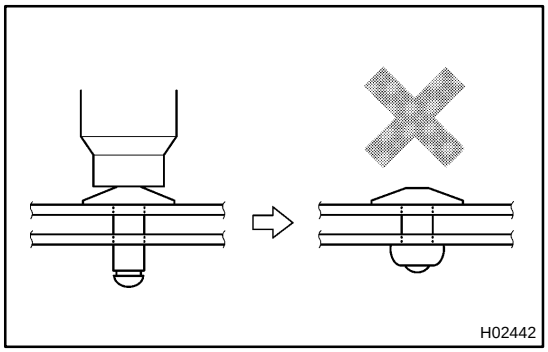

★ **Install the rivet while attaching materials, as they are not tightened firmly.**

13. REMOVE NO. 2 SERVICE HOLE COVER

Remove the window regulator connector clamp, 3 screws and No. 2 service hole cover.

14. REMOVE DOOR GLASS

(a) Open the door glass until the bolts appear in the service hole.

(b) Remove the 2 bolts.

Torque: 5.4 N·m (55 kgf·cm, 48 in.·lbf)

NOTICE:

Be careful not to drop the door glass.

(c) Pull the door glass upward to remove it.

15. REMOVE DOOR GLASS RUN

16. REMOVE WINDOW REGULATOR ASSEMBLY

(a) Disconnect the connector, then remove the bolt, 3 nuts and window regulator assembly.

Torque: 5.4 N·m (55 kgf·cm, 48 in.·lbf)

HINT:

Remove the window regulator assembly through the service hole.

(b) Using a torx driver, remove the 3 torx screws and window regulator motor from the window regulator guide assembly.

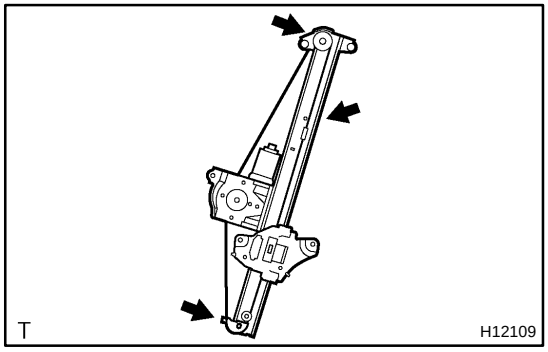

HINT:

At the time of reassembly, please refer to the following items.

★ Apply MP grease to the glass guide and rollers of window regulator assembly.

★ After installing the window regulator assembly, window regulator assembly need to be re-initialized.
Refer to BE-80 .

17. REMOVE FRONT LOWER FRAME

18. REMOVE REAR LOWER FRAME

19. REMOVE DOOR LOCK

(a) Disconnect the 2 control links from the outside handle and door lock cylinder.

(b) Disconnect the connector.

(c) Remove the 3 torx screws, bolt and door lock.

Torque:
Bolt: 5.4 N·m (55 kgf·cm, 48 in.·lbf)
Screw: 4.9 N·m (50 kgf·cm, 43 in.·lbf)

HINT:
Remove the door lock through the service hole.
HINT:
At the time of reassembly, please refer to the following item.
Apply adhesive to 3 screws.

Part No. 08833-00070, THREE BOND 1324 or equivalent

(d) Remove the 2 screws and door lock protector from the door lock.

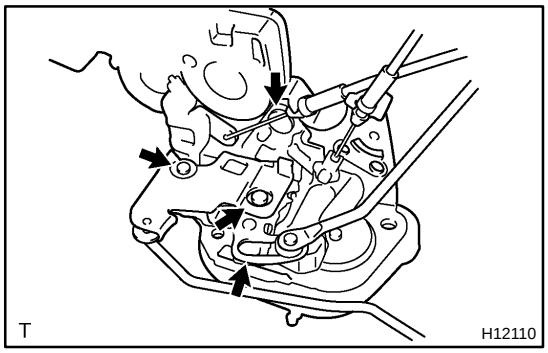

HINT:
At the time of reassembly, please refer to the following item.
Apply MP grease to the sliding and rotating parts of the door lock.

20. REMOVE OUTSIDE HANDLE

(a) Remove the 2 bolts and outside handle with key cylinder.

Torque: 5.4 N·m (55 kgf·cm, 48 in.·lbf)

(b) Remove the bolt and key cylinder from the outside handle.

Torque: 5.4 N·m (55 kgf·cm, 48 in.·lbf)

BO2OR-01

REASSEMBLY

Reassembly is in the reverse order of disassembly (See page BO-9).

FRONT SEAT (Manual Adjuster Type)

BO2Q7-01

COMPONENTS

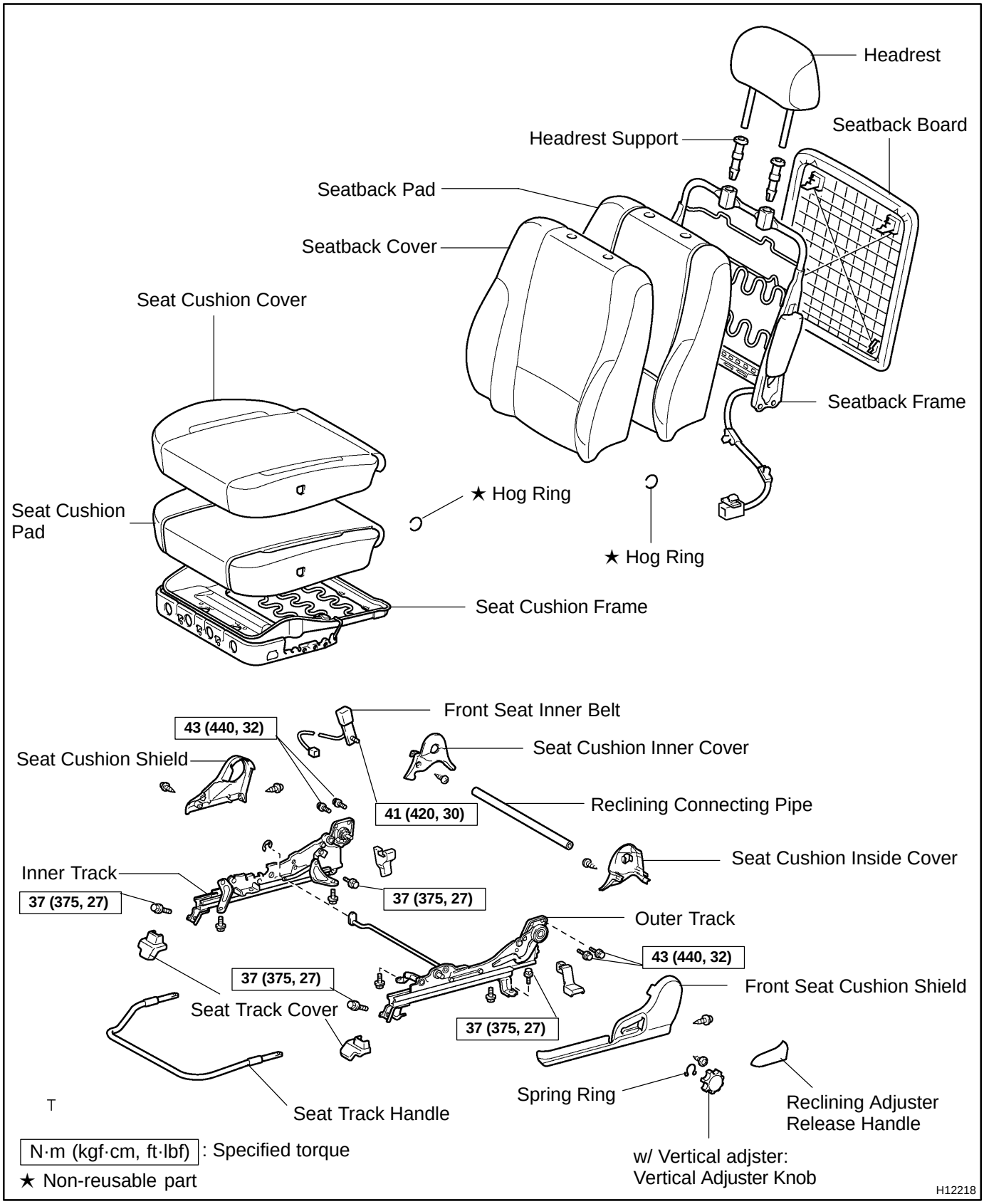

BO2Q9-01

DISASSEMBLY

CAUTION:

- ★ **When storing the seatback frame with the side airbag assembly, do not face down the airbag deployment side.**
- ★ **Never disassemble the side airbag assembly.**

1. REMOVE HEADREST

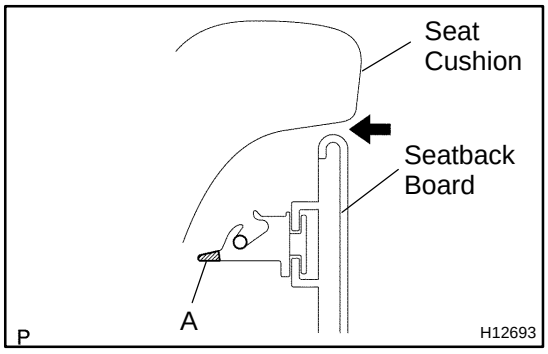

2. REMOVE SEATBACK BOARD

Remove the seatback board.

HINT:

Insert your hand between the upper part of the seatback board and seat cushion, and press ”A” of the clips to remove the clips from the frame wire.

3. w/ Vertical adjuster:
REMOVE VERTICAL ADJUSTER KNOB

Using a screwdriver, remove the snap ring and vertical adjuster knob.

HINT:

Tape the screwdriver tip before use.

4. REMOVE RECLINING ADJUSTER RELEASE HANDLE

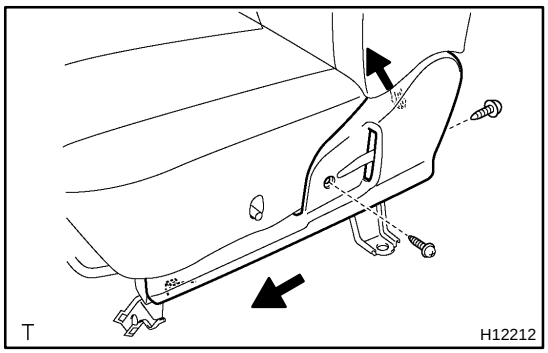

5. REMOVE FRONT SEAT CUSHION SHIELD

Remove the screw and front seat cushion shield as shown in the illustration.

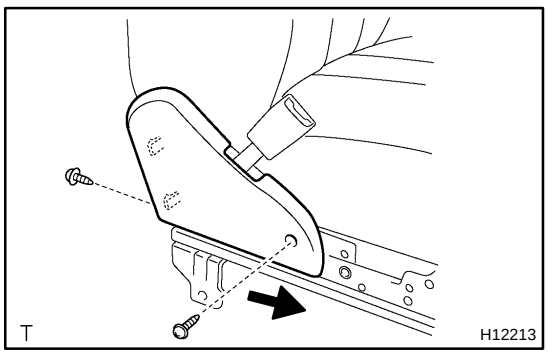

6. REMOVE FRONT SEAT CUSHION INNER SHIELD

Remove the 2 screws and front seat cushion inner shield as shown in the illustration.

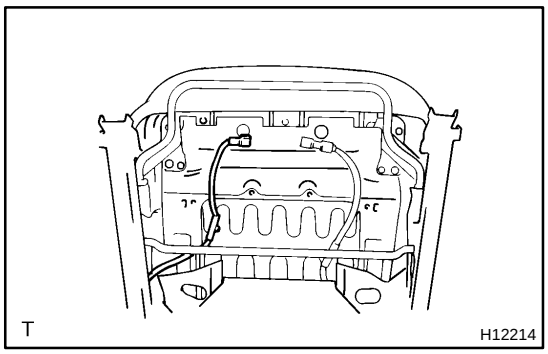

7. REMOVE FRONT SEAT INNER BELT

(a) Remove the front seat inner belt wire harness from the front seat cushion frame.

(b) Remove the bolt, washer and front seat inner belt.

8. REMOVE SEATBACK COVER

(a) Remove the headrest supports.

(b) Remove the hog rings.

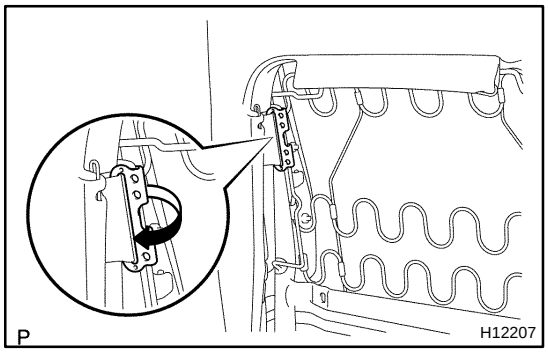

(c) Disengage the hook as shown in the illustration.

(d) Remove the seatback cover with pad.

(e) Remove the seatback cover from the seatback pad.

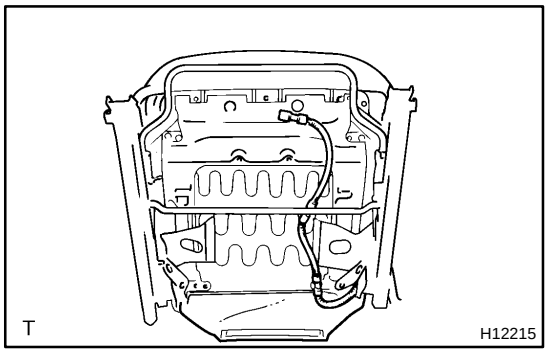

9. REMOVE SEAT CUSHION COVER

(a) Remove the hog rings and side airbag assembly wire harness.

(b) Remove the 4 bolts and seat cushion assembly.

(c) Remove the seat cushion cover with pad from the seat cushion frame.

(d) Remove the seat cushion cover from the seat cushion pad.

10. REMOVE SEATBACK FRAME

11. REMOVE RECLINING CONNECTING PIPE

12. REMOVE SEAT CUSHION INSIDE COVER

(a) Remove the screws and seat cushion inside cover.

(b) Employ the same manner described above to the other side.

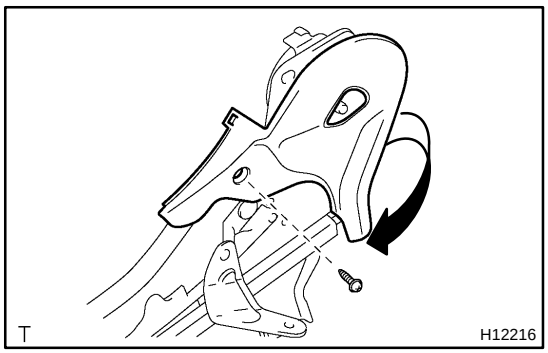

13. REMOVE SEAT TRACK HANDLE

Using a screwdriver, remove the seat track handle.

HINT:

Tape the screwdriver tip before use.

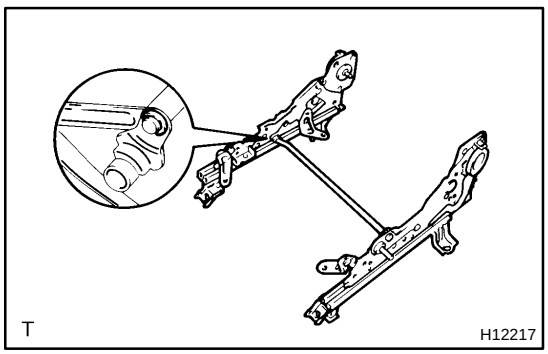

14. w/ Vertical adjuster:
DISASSEMBLE OUTER TRACK AND INNER TRACK

(a) Using a screwdriver, remove the E-ring.

(b) Disassemble the outer track and inner track.

BO2QA-01

INSPECTION

INSPECT RECLINING LOCK POSITION AND SLIDING LOCK POSITION SLIPPING OFF

(a) When reclining the seat, inspect that the outer and inner recliners are released at the same time.

HINT:

When the reclining lock position slips off, disassemble the seat to adjust the position.

(b) When sliding the seat, inspect that the outer and inner tracks are locked at the same time.

HINT:

When sliding lock positions slip off, loosen the bolts to adjust the position.

BO2QC-01

INSTALLATION

INSTALL FRONT SEAT

(a) Slide the front seat to the frontmost position.

NOTICE:

Make sure that the seat adjuster locks.

(b) Without holding the seat track handle, mount the seat to the vehicle.

HINT:

If holding the seat track handle, the adjusted frontmost positions will slip off.

(c) Connect the airbag connector.

(d) Tighten the bolts on the rear side temporarily, tighten them completely starting from the bolt on the inner side.

Torque: 37 N·m (375 kgf·cm, 27 ft·lbf)

(e) Slide the seat to the rearmost position to install the bolts on the front side.

Torque: 37 N·m (375 kgf·cm, 27 ft·lbf)

BO2QB-01

REASSEMBLY

1. w/ Vertical adjuster:
ASSEMBLE OUTER TRACK AND INNER TRACK

2. INSTALL SEAT TRACK HANDLE

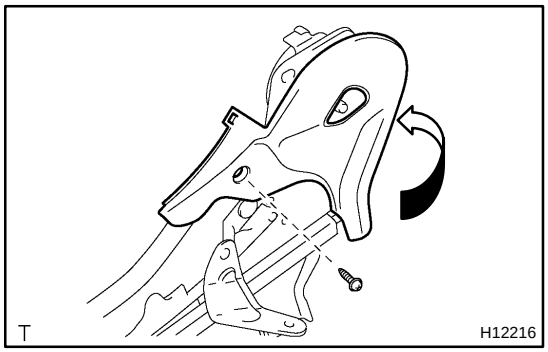

3. INSTALL SEAT CUSHION INSIDE COVER

(a) Install the seat cushion inside cover with the screw.

(b) Employ the same manner described above to the other side.

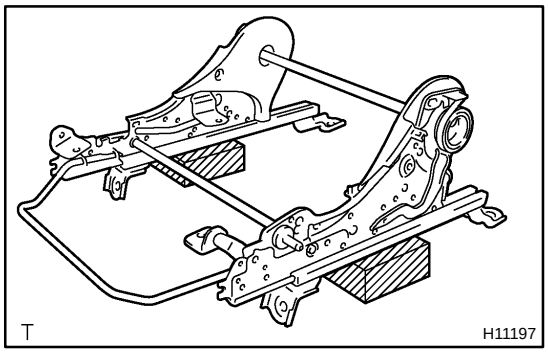

4. INSTALL RECLINING CONNECTING PIPE

(a) Adjust the reclining lock positions of the seat adjusters.

(b) Slide the seat adjusters to the most front position.

(c) Place the adjusters on a spacer to adjust the seat rails in parallel and install the connecting pipe.

HINT:

When installing the connecting pipe while raising up the adjusters, the lock positions adjusted in 4-(a) may become detached. When this happens, a lock error will occur.

5. INSTALL SEATBACK FRAME
Torque: 43 N·m (440 kgf·cm, 32 ft·lbf)

6. INSTALL SEAT CUSHION ASSEMBLY

(a) Install the seat cushion cover to the seat cushion pad.

(b) Install the seat cushion cover with pad to the seat cushion frame.

(c) Install the seat cushion assembly to the seat adjuster with 4 bolts.
Torque: 18 N·m (185 kgf·cm, 13 ft·lbf)

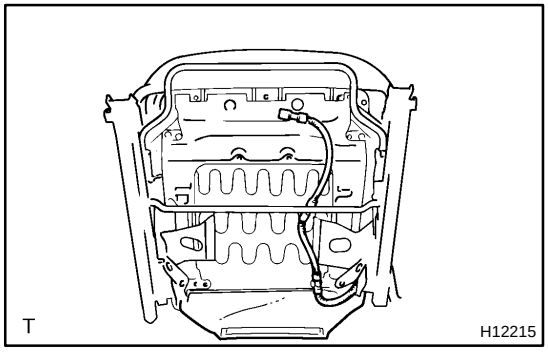

(d) Install the side airbag assembly wire harness and new hog rings.

7. INSTALL SEATBACK ASSEMBLY

(a) Install the seatback cover to the seatback pad.

(b) Install the seatback cover with pad to the seatback frame.

(c) Engage the hook as shown in the illustration.

(d) Install new hog rings.

(e) Install the headrest support.

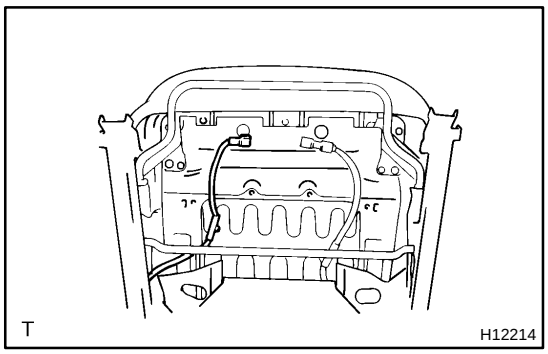

8. INSTALL FRONT SEAT INNER BELT

(a) Install the front seat inner belt with bolt and washer.
Torque: 41 N·m (420 kgf·cm, 30 ft·lbf)

(b) Install the front seat inner belt wire harness to the seat cushion frame.

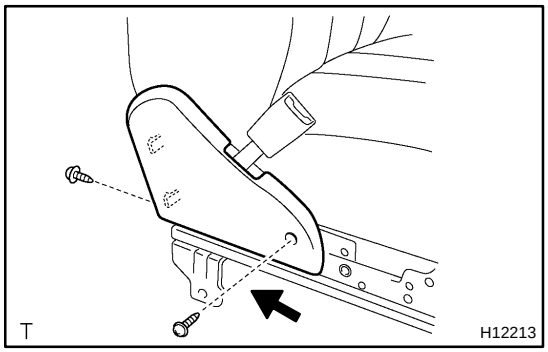

9. INSTALL FRONT SEAT CUSHION INNER SHIELD

Install the front seat cushion inner shield with the 2 screws as shown in the illustration.

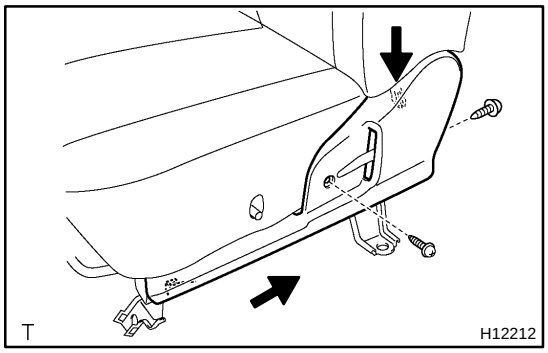

10. INSTALL FRONT SEAT CUSHION SHIELD

Install the front cushion shield with the screw as shown in the illustration.

11. INSTALL RECLINING ADJUSTER RELEASE HANDLE

12. w/ Vertical adjuster:
INSTALL VERTICAL ADJUSTER KNOB

13. INSTALL SEATBACK BOARD

14. INSTALL HEADREST

BO2Q8-01

REMOVAL

REMOVE FRONT SEAT

(a) Using a screwdriver, remove the seat track covers.

HINT:

Tape the screwdriver tip before use.

(b) Remove the 4 bolts.

(c) Disconnect the connectors.

NOTICE:

When disconnecting the side airbag connector take care not to damage the airbag wire harness.

(d) Remove the front seat.

NOTICE:

Be careful not to damage the body.

FRONT SEAT (Power Adjuster Type)

COMPONENTS

BO2Q2-01

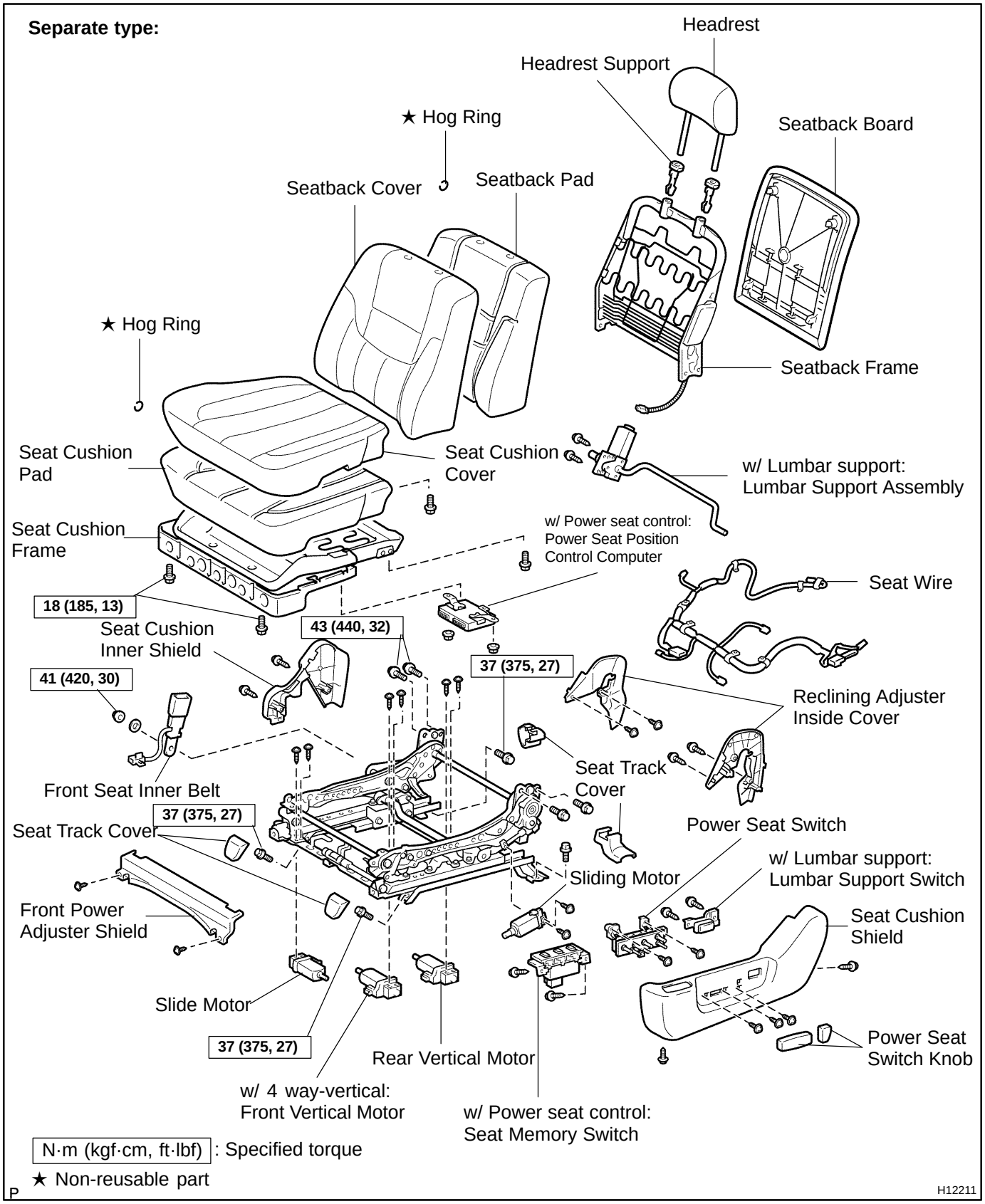

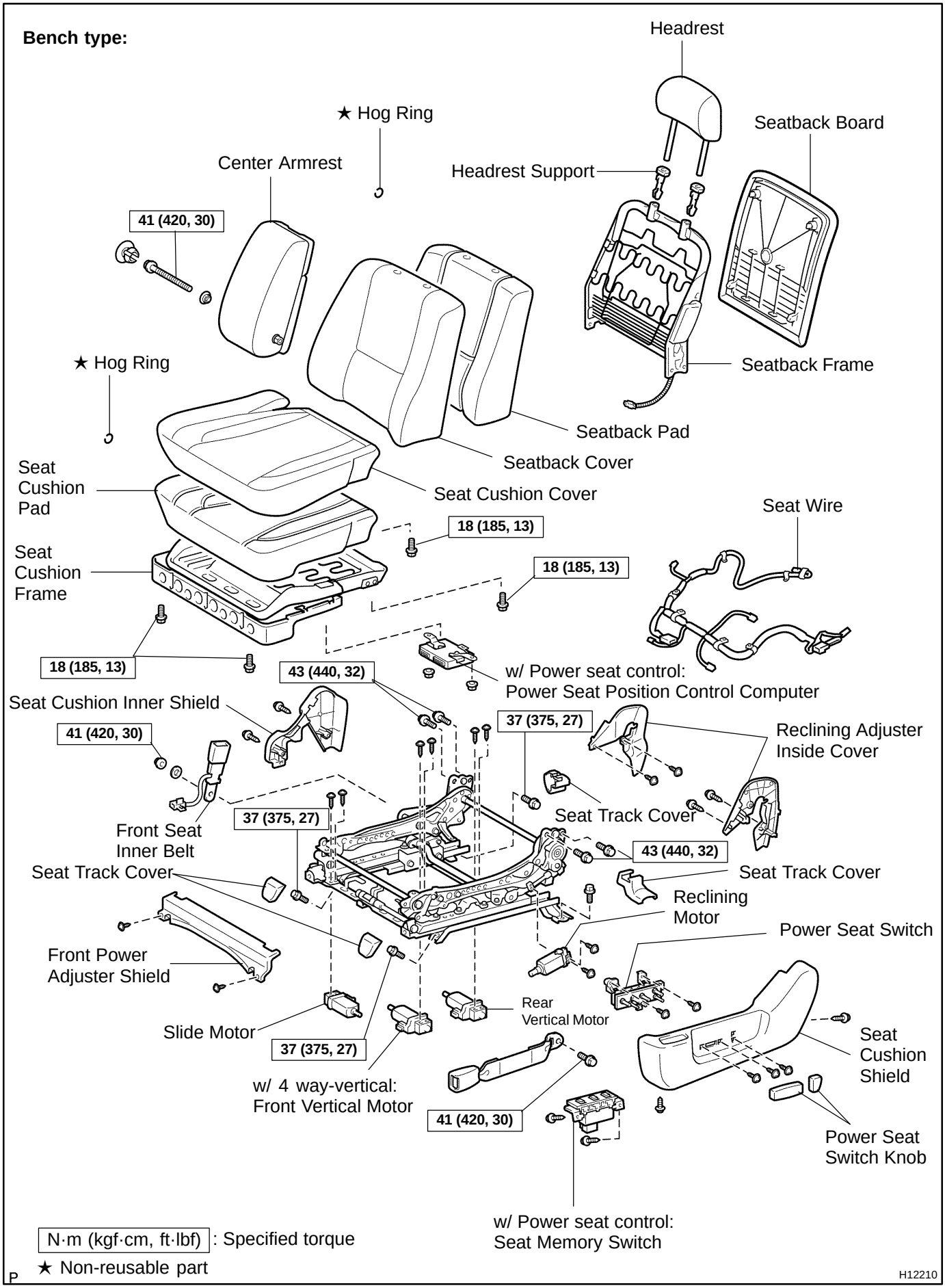
Bench type:
Headrest
★ Hog Ring
Seatback Board
Center Armrest
Headrest Support
41 (420, 30)
★ Hog Ring
Seatback Frame
Seatback Pad
Seatback Cover
Seat Cushion Pad
Seat Cushion Cover
Seat Wire
18 (185, 13)
Seat Cushion Frame
18 (185, 13)
18 (185, 13)
43 (440, 32)
w/ Power seat control:
Power Seat Position Control Computer
Seat Cushion Inner Shield
41 (420, 30)
37 (375, 27)
Reclining Adjuster Inside Cover
Front Seat Inner Belt
37 (375, 27)
Seat Track Cover
43 (440, 32)
Seat Track Cover
Seat Track Cover
Reclining Motor
Power Seat Switch
Front Power Adjuster Shield
Rear Vertical Motor
Slide Motor
37 (375, 27)
Seat Cushion Shield
w/ 4 way-vertical:
Front Vertical Motor
41 (420, 30)
Power Seat Switch Knob
w/ Power seat control:
Seat Memory Switch
N·m (kgf·cm, ft·lbf) : Specified torque
★ Non-reusable part
P
H12210

BO2Q4-01

DISASSEMBLY

CAUTION:

- ★ **When storing the seatback frame with the side airbag assembly, do not face down the airbag deployment side.**
- ★ **Never disassemble the side airbag assembly.**

1. Bench type: Driver's seat
REMOVE CENTER ARMREST

2. REMOVE HEADREST

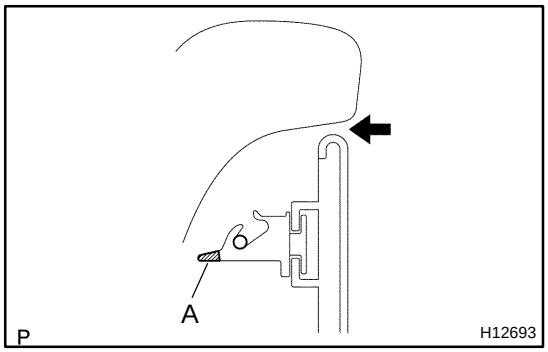

3. REMOVE SEATBACK BOARD

Remove the seatback board.

HINT:

Insert your hand between the upper part of the seatback board and seat cushion, and press "A" of the clips to remove the clips from the frame wire.

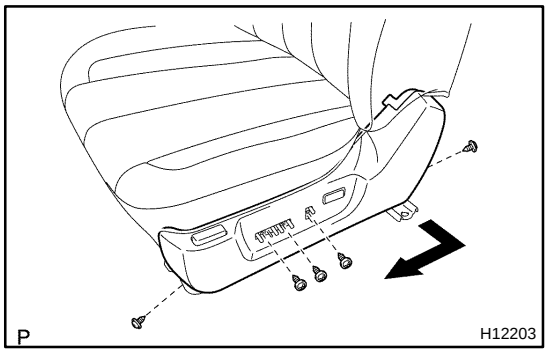

4. REMOVE SEAT CUSHION SHIELD

(a) Using a screwdriver, remove the power seat switch knobs.

HINT:

Tape the screwdriver tip before use.

(b) Remove the 5 screws.

(c) Remove the seat cushion shield as shown in the illustration, then disconnect the connectors.

(d) w/ Lumbar support:
Remove the 2 screws and lumbar support switch from the seat cushion shield.

(e) w/ Power seat control:
Remove the 2 screws and seat memory switch from the seat cushion shield.

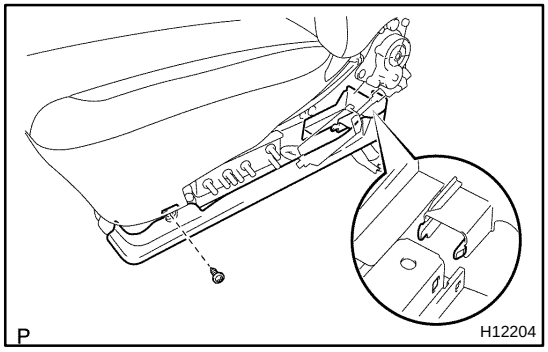

5. REMOVE SEAT CUSHION LOWER SHIELD

Remove the screw and seat cushion lower shield as shown in the illustration.

Bench type:

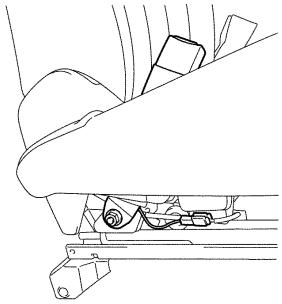

P

Separate type:

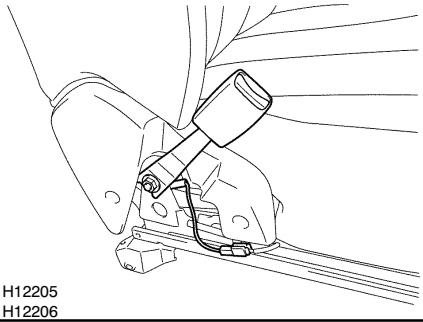

P H12205
H12206

H12660

6. REMOVE FRONT SEAT INNER BELT

(a) Disconnect the connector.

(b) Remove the connector, then remove the nut, washer and front seat inner belt.

Torque: 41 N·m (420 kgf·cm, 30 ft·lbf)

7. REMOVE SEAT CUSHION INNER SHIELD

8. REMOVE SEATBACK COVER

(a) Remove the headrest supports.

(b) Remove the hog rings.

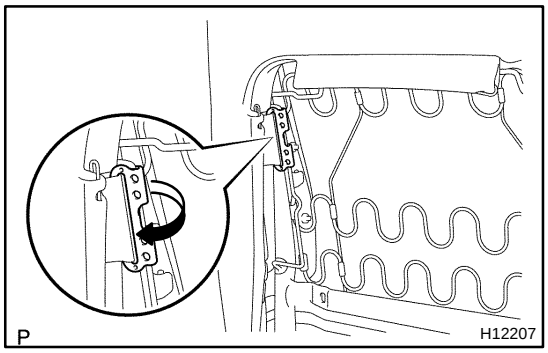

P

H12207

(c) Disengage the hook as shown in the illustration.

(d) Remove the seatback cover with pad.

(e) Remove the seatback cover from the seatback pad.

9. REMOVE FRONT POWER ADJUSTER SHIELD

10. Bench type:
REMOVE FRONT SEAT CENTER BELT
Torque: 41 N·m (420 kgf·cm, 30 ft·lbf)

11. REMOVE SEAT CUSHION COVER

(a) Remove the seat wire clamp from the seat cushion assembly.

(b) Separate type:
Remove the 4 bolts and seat cushion assembly.
Torque: 18 N·m (185 kgf·cm, 13 ft·lbf)

(c) Bench type:
Remove the 5 bolts and seat cushion assembly.
Torque: 18 N·m (185 kgf·cm, 13 ft·lbf)

(d) Remove the seat cushion cover with pad from the seat cushion frame.

(e) Remove the seat cushion cover from the seat cushion pad.

12. REMOVE POWER SEAT SWITCH

13. REMOVE SEAT WIRE

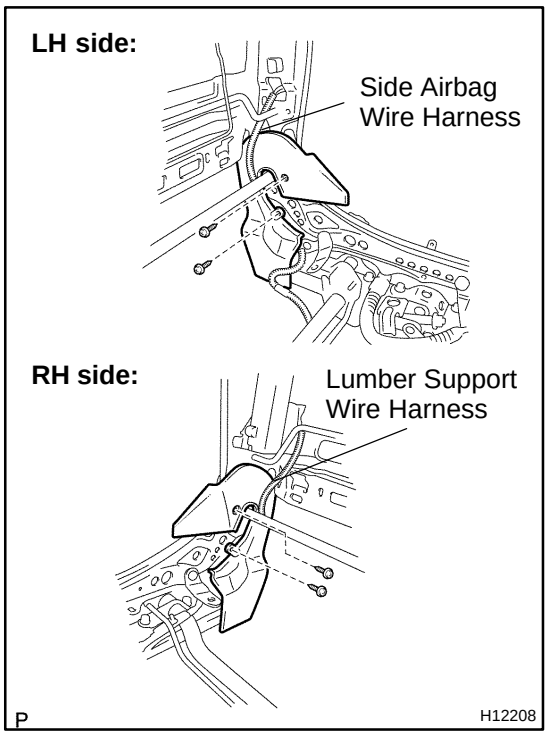

14. REMOVE RECLINING ADJUSTER INSIDE COVERS

Remove the 4 screws and reclining adjuster inside covers.

15. REMOVE SEATBACK FRAME

Torque: 41 N·m (420 kgf·cm, 30 ft·lbf)

16. w/ Lumbar support:

REMOVE LUMBAR SUPPORT ASSEMBLY

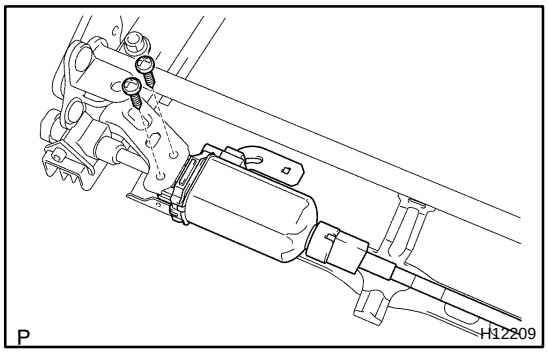

17. REMOVE SLIDE MOTOR

(a) Remove the 2 screws, then disconnect the drive cable.

(b) Remove the slide motor from the power seat adjuster.

18. w/ 4 way-vertical:

REMOVE FRONT VERTICAL MOTOR

19. REMOVE REAR VERTICAL MOTOR

20. REMOVE RECLINING MOTOR

BO2Q6-01

INSTALLATION

Installation is in the reverse order of removal (See page BO-105).

BO2Q5-01

REASSEMBLY

Reassembly is in the reverse order of disassembly (See page BO-106).

BO2Q3-01

REMOVAL

REMOVE FRONT SEAT

(a) Using a screwdriver, remove the seat track covers.

HINT:

Tape the screwdriver tip before use.

(b) Remove the 4 bolts.

Torque: 37 N·m (375 kgf·cm, 27 ft·lbf)

(c) Disconnect the connectors.

NOTICE:

When disconnecting the side airbag connector take care not to damage the airbag wire harness.

(d) Remove the front seat.

NOTICE:

Be careful not to damage the body.

BO2P5-01

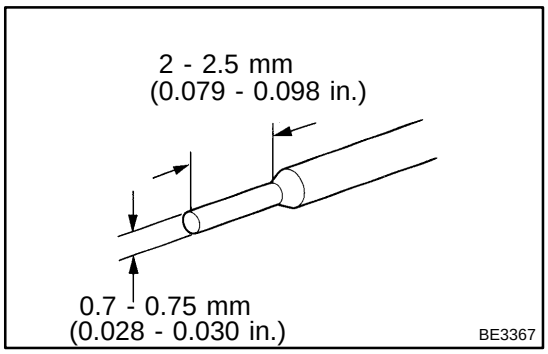

ADJUSTMENT

ADJUST WASHER NOZZLE

Using a tool like the one shown in the illustration, change the direction of the nozzle hole to adjust the point where washer fluid hits the windshield.

FRONT WIPER AND WASHER

COMPONENTS

BO2P2-01

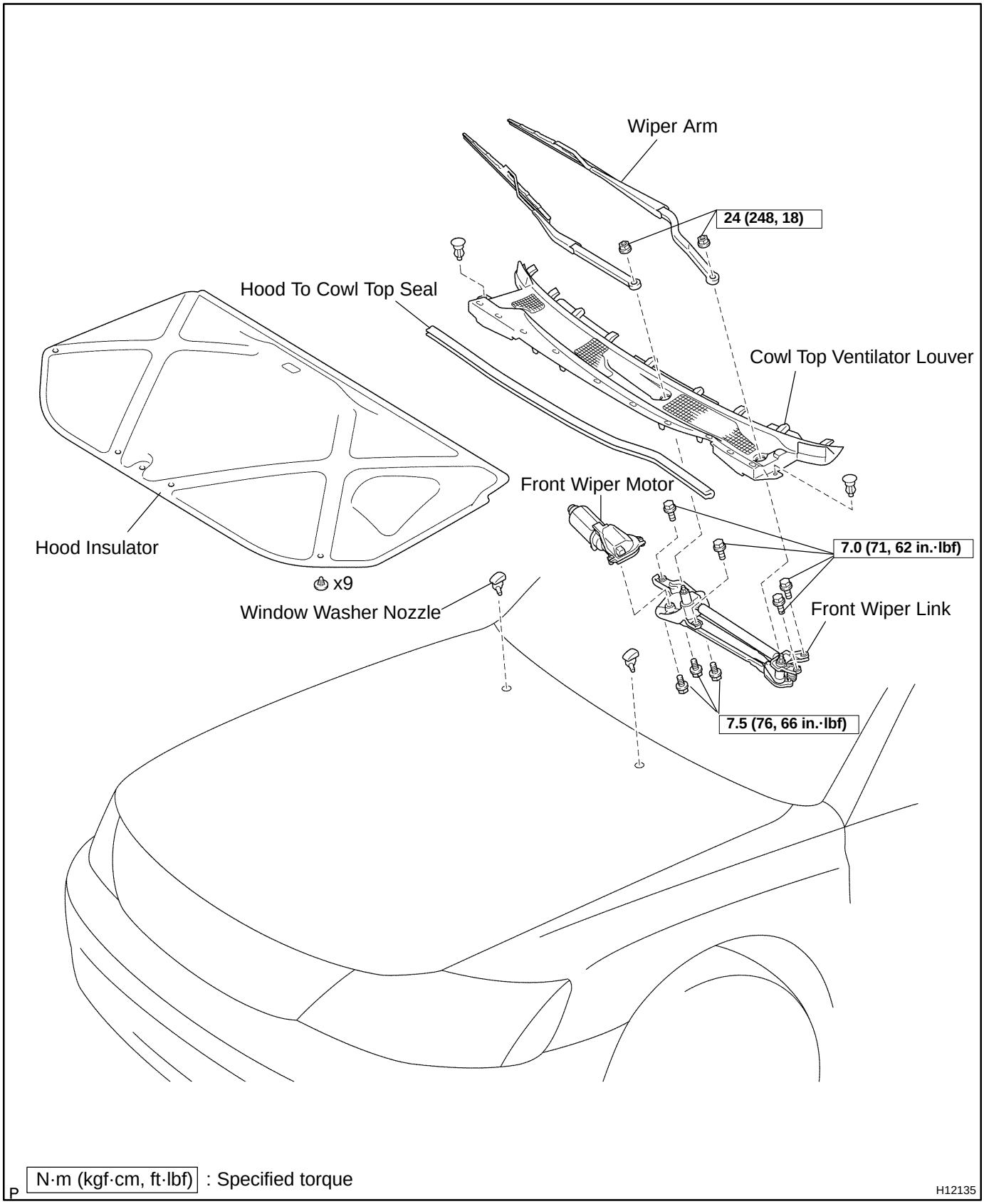

BO2P4-01

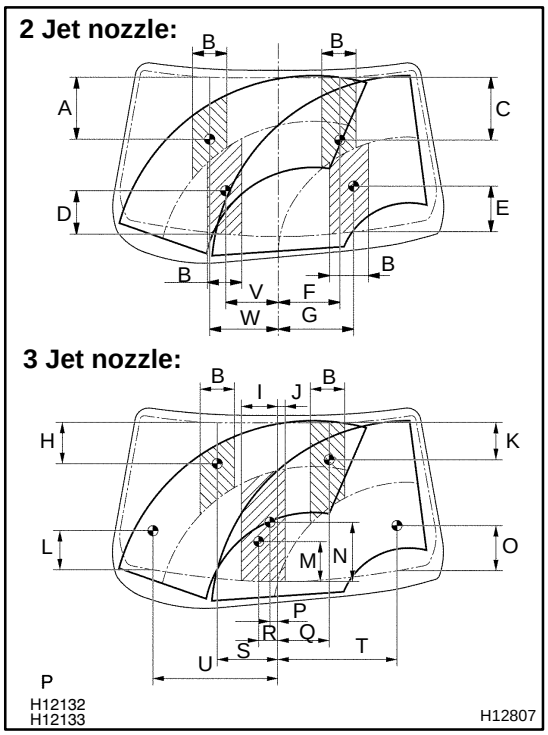

INSPECTION

INSPECT FRONT WASHER NOZZLE

While operating the washer, check that both the point where the washer fluid from the upper nozzles hits the windshield, and the upsurge area are within the range indicated by the hatched line.

A: 360 mm (14.17 in.)
B: 150 mm (5.91 in.)
C: 370 mm (14.57 in.)
D: 190 mm (7.48 in.)
E: 200 mm (7.87 in.)
F: 220 mm (8.66 in.)
G: 430 mm (16.93 in.)
H: 265 mm (10.43 in.)
I: 165 mm (6.50 in.)
J: 35 mm (1.38 in.)
K: 215 mm (8.46 in.)
L: 180 mm (7.09 in.)
M: 175 mm (6.89 in.)
N: 265 mm (10.43 in.)
O: 195 mm (7.68 in.)
P: 40 mm (1.57 in.)
Q: 230 mm (9.06 in.)
R: 90 mm (3.54 in.)
S: 270 mm (10.63 in.)
T: 545 mm (21.46 in.)
U: 505 mm (19.88 in.)
V: 130 mm (5.12 in.)
W: 350 mm (13.78 in.)

BO2P6-01

INSTALLATION

1. INSTALL WINDOW WASHER NOZZLES

2. INSTALL HOOD INSULATOR

3. INSTALL WIPER MOTOR

(a) Install the wiper motor to the wiper link with the 3 bolts.
Torque: 7.5 kgf·cm (76 kgf·cm, 66 in.·lbf)

(b) Connect teh wiper link to the wiper motor.

4. INSTALL FRONT WIPER MOTOR & LINK ASSEMBLY

(a) Place the front wiper motor & link assembly into the cowl panel.

HINT:

Snow clutch should be in the normal condition.

If snow clutch position is changed into the winter condition, re-change it into the normal condition.

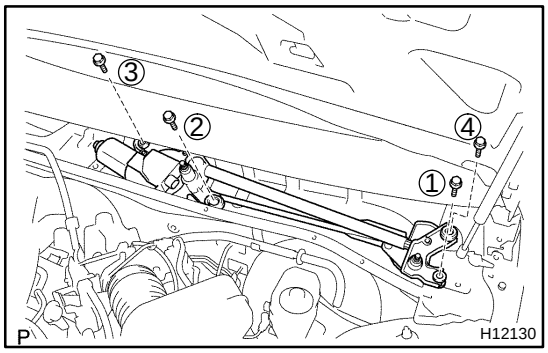

(b) Set the front wiper motor & link assembly aligning the installation holes and tighten the bolts in the order shown in the illustration.
Torque: 7.0 kgf·cm (71 kgf·cm, 62 in.·lbf)

(c) Install the wire harness clamp, then connect the connector.

5. INSTALL COWL TOP VENTILATOR LOUVER

6. INSTALL HOOD TO COWL TOP SEAL

7. INSTALL WIPER ARMS

(a) Operate the wiper motor once and turn the wiper switch OFF.

(b) Install the wiper arms and tighten nuts by hand.

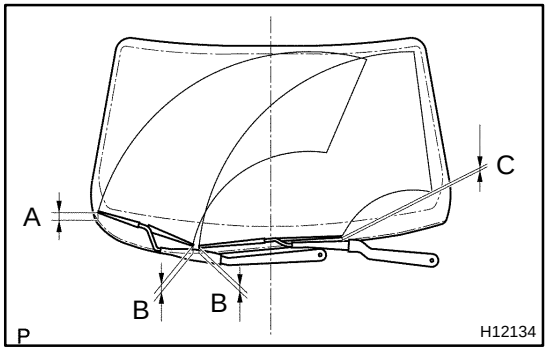

(c) Adjust the installation position of the wiper arms to the position as shown in the illustration.
A: 52 mm (2.05 in.)
B: 30 ± 10 mm (1.18 ± 0.39 in.)
C: 21.3 mm (0.839 in.)

(d) Torque the 2 nuts.
Torque: 24 kgf·cm (248 kgf·cm, 18 ft·lbf)

(e) Install the 2 wiper arm head caps.

BO2P3-01

REMOVAL

1. REMOVE WIPER ARMS

2. REMOVE HOOD TO COWL TOP SEAL

NOTICE:

Do not strongly pull off the hood to cowl top seal as it may tear.

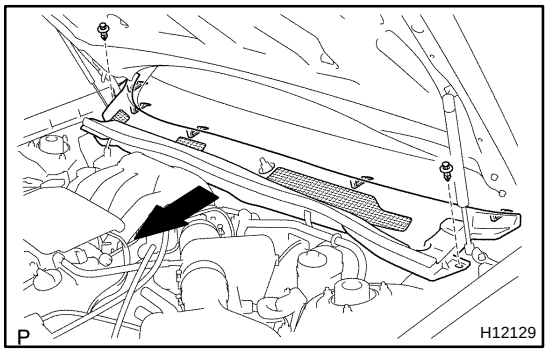

3. REMOVE COWL TOP VENTILATOR LOUVER

(a) Using a clip remover, remove the 2 clips.

(b) Remove the cowl top ventilator louver as shown in the illustration.

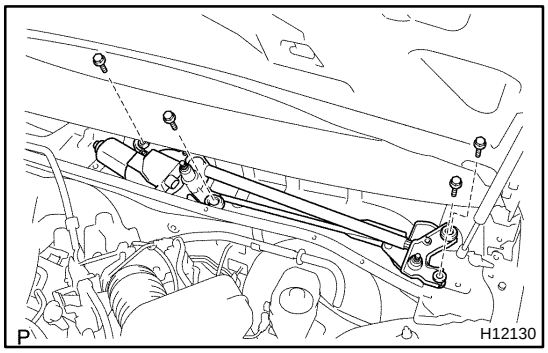

4. REMOVE FRONT WIPER MOTOR & LINK ASSEMBLY

(a) Disconnect the connector, then remove the wire harness.

(b) Remove the 4 bolts and front wiper motor & link assembly.

5. REMOVE WIPER MOTOR

(a) Using a screwdriver, disconnect the wiper link from the wiper motor.

HINT:

Tape the screwdriver tip before use.

(b) Remove the 3 bolts and motor from the wiper link assembly.

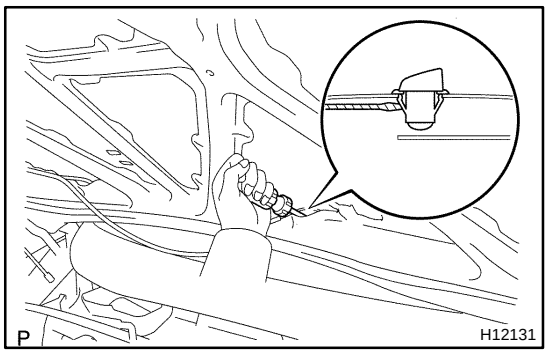

6. REMOVE WINDOW WASHER NOZZLE

(a) Remove the 9 clips and hood insulator.

(b) Using a screwdriver, remove the window washer nozzle.

HINT:

Tape the screwdriver tip before use.

(c) Employ the same manner described above to the other side.

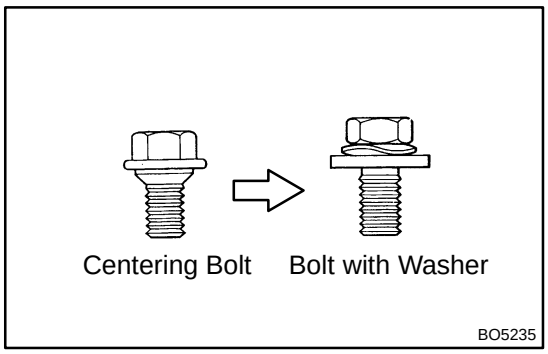

HOOD

ADJUSTMENT

BO0XL-03

HINT:

Since the centering bolt is used as a hood hinge and lock set bolt, the hood and lock cannot be adjusted with it on. Substitute the bolt with washer for the centering bolts.

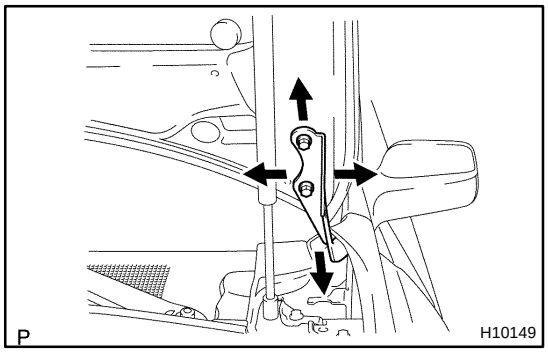

1. ADJUST HOOD IN FORWARD/REARWARD AND LEFT/RIGHT DIRECTIONS

Adjust the hood by loosening the hood side hinge bolts.

Torque: 13 N·m (130 kgf·cm, 9 ft·lbf)

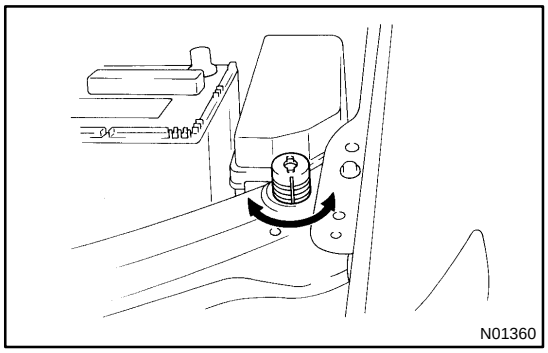

2. ADJUST FRONT EDGE OF HOOD IN VERTICAL DIRECTION

Adjust the hood by turning the cushions.

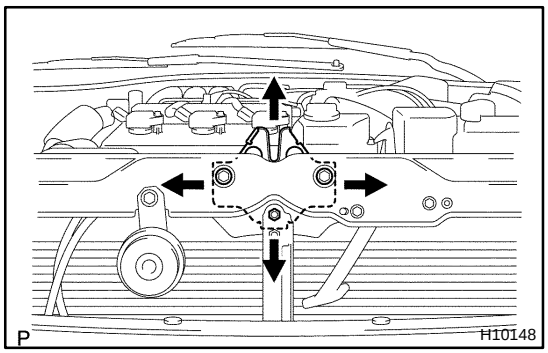

3. ADJUST HOOD LOCK

Adjust the lock by loosening the 2 bolts and nut.

Torque: 6.9 N·m (70 kgf·cm, 61 in.·lbf)

HOOD SUPPORT

BO0XM-03

REPLACEMENT

1. REMOVE SUPPORT FROM HOOD

Remove the bolt and support from the hood.

HINT:

While supporting the hood by hand, remove the support.

2. REMOVE SUPPORT FROM BODY

Remove the bolt and support.

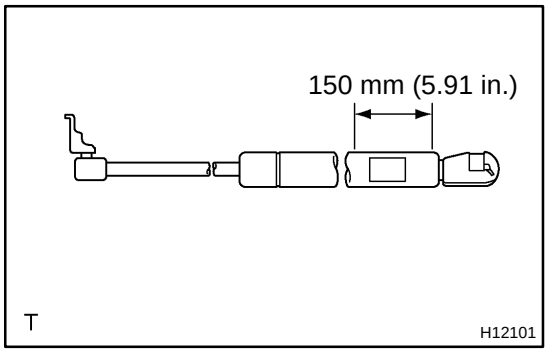

3. IF NECESSARY, REPLACE HOOD SUPPORT

NOTICE:

Handling the hood support

- ★ **Do not disassemble the support because the cylinder is filled with pressurized gas.**
- ★ **If the support is to be replaced, drill a 2.0 - 3.0 mm (0.079 - 0.118 in.) hole in the area shown in the illustration to completely discharge the high-pressure gas before disposing of it.**
- ★ **When drilling, chips may fly out so work carefully.**
- ★ **The gas is colorless, odorless and non-toxic.**
- ★ **When working, handle the support carefully. Never score or scratch the exposed part of the piston rod, and allow any paint or oil to get on it.**
- ★ **Do not turn the piston rod and cylinder with the support fully extended.**

4. INSTALL HOOD SUPPORT

(a) Install the bolt and hood support to the body.
Torque: 17 N·m (175 kgf·cm, 13 ft·lbf)

(b) Install the bolts and hood support to the hood.
Torque: 17 N·m (175 kgf·cm, 13 ft·lbf)

INSTRUMENT PANEL

BO2PU-02

COMPONENTS

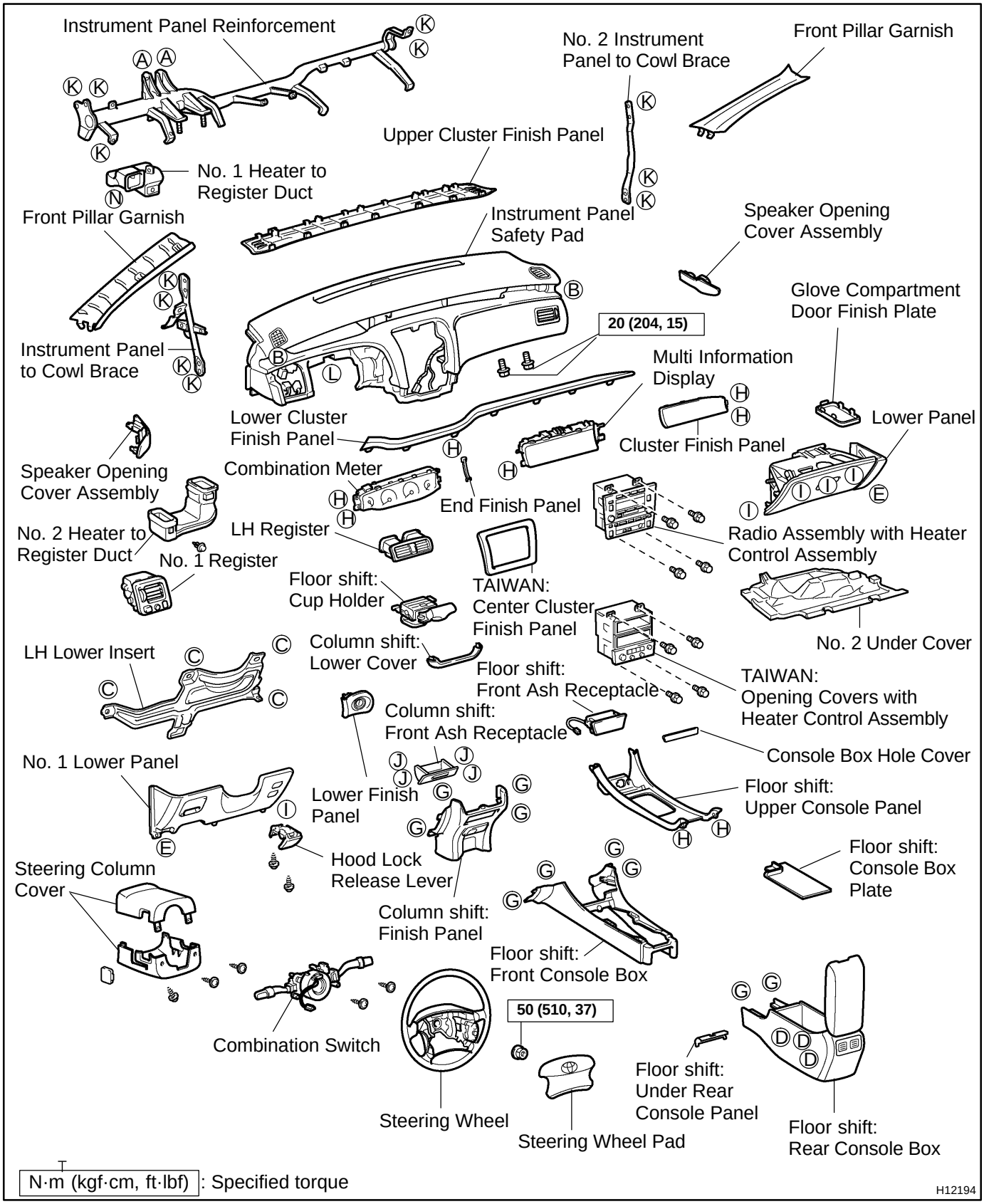

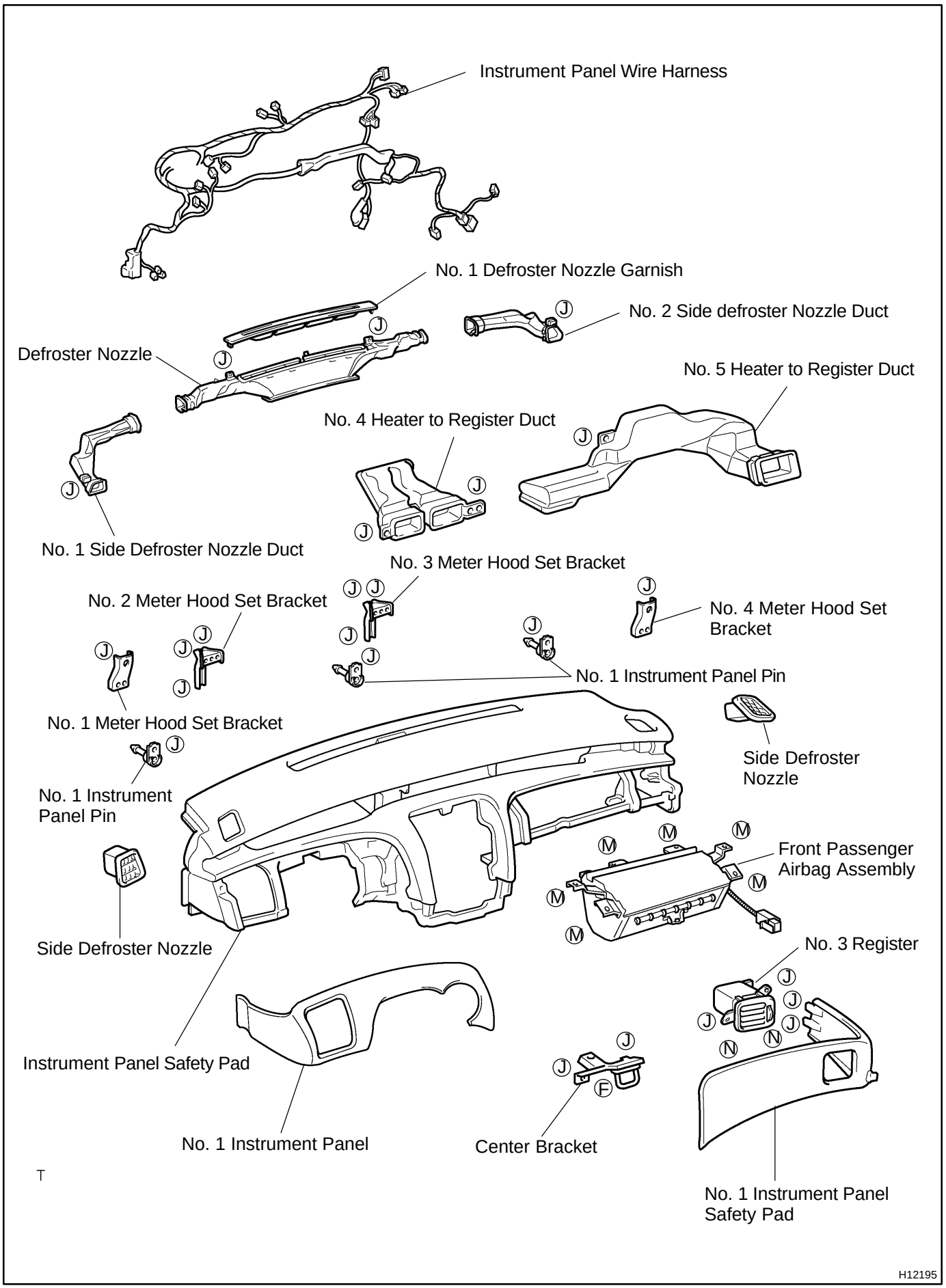
Instrument Panel Wire Harness
No. 1 Defroster Nozzle Garnish
No. 2 Side defroster Nozzle Duct
Defroster Nozzle
No. 5 Heater to Register Duct
No. 4 Heater to Register Duct
No. 1 Side Defroster Nozzle Duct
No. 3 Meter Hood Set Bracket
No. 2 Meter Hood Set Bracket
No. 4 Meter Hood Set Bracket
No. 1 Instrument Panel Pin
No. 1 Meter Hood Set Bracket
Side Defroster Nozzle
No. 1 Instrument Panel Pin
Front Passenger Airbag Assembly
Side Defroster Nozzle
No. 3 Register
Instrument Panel Safety Pad
No. 1 Instrument Panel
Center Bracket
No. 1 Instrument Panel Safety Pad
H12195

HINT:
Screw shapes and sizes are indicated in the table below. The codes (”A” - ”N”) correspond to those indicated on the previous page.

mm (in.)

	Shape	Size		Shape	Size		Shape	Size
Ⓐ	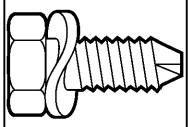	ø = 8 (0.31) L = 20 (0.79)	Ⓑ	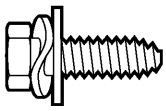	ø = 6 (0.24) L = 20 (0.79)	Ⓒ	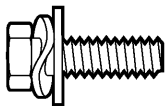	ø = 6 (0.24) L = 20 (0.79)
Ⓓ	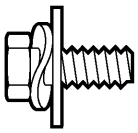	ø = 6 (0.24) L = 16 (0.63)	Ⓔ		ø = 6 (0.24) L = 18 (0.71)	Ⓕ	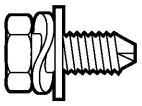	ø = 6 (0.24) L = 16 (0.63)
Ⓖ		ø = 5.22 (0.2055) L = 20 (0.79)	Ⓗ		ø = 5.22 (0.2055) L = 16 (0.63)	Ⓘ		ø = 5 (0.20) L = 16 (0.63)
Ⓙ	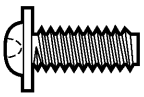	ø = 5 (0.20) L = 14 (0.55)	Ⓚ	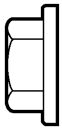	ø = 8 (0.31)	Ⓛ	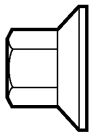	ø = 6 (0.24)
Ⓜ	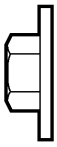	ø = 6 (0.24)	Ⓝ	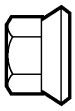	ø = 6 (0.24)			

T

H12196

BO2PW-01

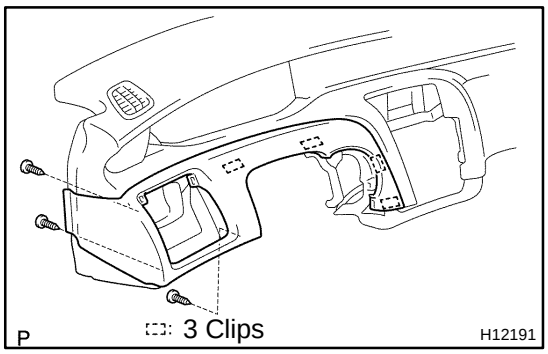

DISASSEMBLY

1. REMOVE NO. 1 INSTRUMENT PANEL

(a) Remove the 3 screws.

(b) Using a screwdriver, remove the No.1 instrument panel.

HINT:

Tape the screwdriver tip before use.

2. REMOVE SIDE DEFROSTER NOZZLES

3. REMOVE NO. 1 DEFROSTER NOZZLE GARNISH

4. REMOVE NO. 1 INSTRUMENT PANEL PINS

5. REMOVE NO. 1 SIDE DEFROSTER NOZZLE DUCT

6. REMOVE NO. 2 SIDE DEFROSTER NOZZLE DUCT

7. REMOVE DEFROSTER NOZZLE

8. REMOVE NO. 5 HEATER TO REGISTER DUCT

9. REMOVE NO. 4 HEATER TO REGISTER DUCT

10. REMOVE METER HOOD SET BRACKETS

11. REMOVE CENTER BRACKET

12. REMOVE INSTRUMENT PANEL WIRE HARNESS

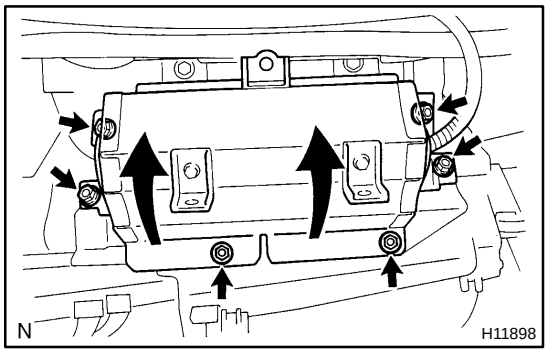

13. REMOVE FRONT PASSENGER AIRBAG ASSEMBLY

Remove the 6 nuts and front passenger airbag assembly as shown in the illustration.

CAUTION:

- ★ **Do not store the front passenger airbag assembly with the airbag deployment side facing down.**
- ★ **Never disassemble the front passenger airbag assembly.**

NOTICE:

When removing the front passenger airbag assembly, take care not to damage the wire harness.

14. REMOVE NO. 1 INSTRUMENT PANEL SAFETY PAD

15. REMOVE NO. 3 REGISTER

BO2PY-01

INSTALLATION

Installation is in the reverse order of removal (See page BO-90).

BO2PX-01

REASSEMBLY

Reassembly is in the reverse order of disassembly (See page BO-95).

BO2PV-01

REMOVAL

1. **REMOVE FRONT SEATS**
   (See page BO-105 or BO-112)
2. **REMOVE FRONT DOOR WEATHERSTRIPS**
3. **REMOVE FRONT PILLAR GARNISHES**
4. **REMOVE STEERING WHEEL PAD**
   (See page SR-12)
5. **REMOVE COLUMN COVERS**

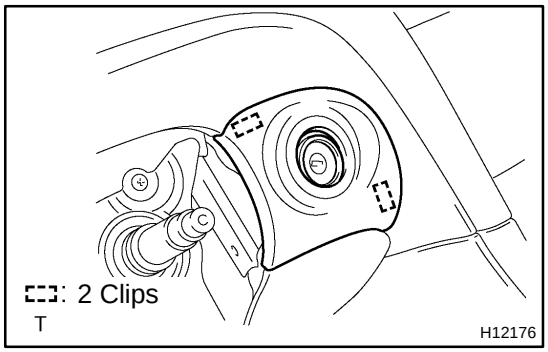

6. **REMOVE LOWER FINISH PANEL**

Using a screwdriver, remove the lower finish panel.

HINT:

Tape the screwdriver tip before use.

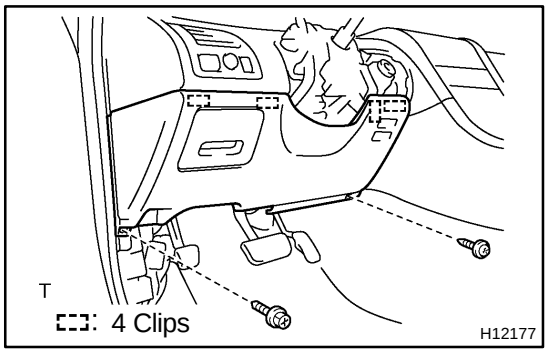

7. **REMOVE NO. 1 LOWER PANEL**

(a) Remove the 2 screws and hood lock release lever.

(b) Using a screwdriver, remove the No. 1 lower panel.

HINT:

Tape the screwdriver tip before use.

8. **REMOVE LH LOWER INSERT**
9. **REMOVE NO. 2 HEATER TO REGISTER DUCT**

Remove the 2 clips and heater to register duct.

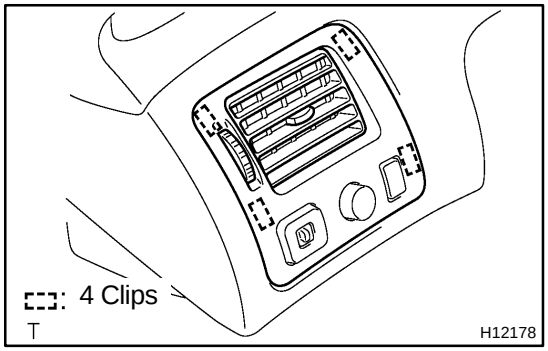

10. **REMOVE NO. 1 REGISTER**

Using a screwdriver, remove the No. 1 register, then disconnect the connectors.

HINT:

Tape the screwdriver tip before use.

11. **REMOVE STEERING COLUMN**
    (See page SR-12)
12. **REMOVE NO. 2 UNDER COVER**

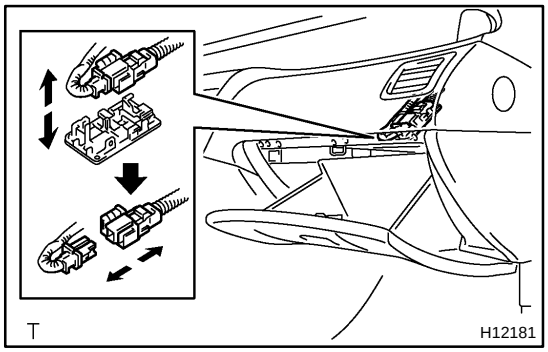

13. **DISCONNECT AIRBAG CONNECTOR**

(a) Using a screwdriver, pry out the glove compartment door finish plate inside the lower panel.

HINT:

Tape the screwdriver tip before use.

(b) Remove the connector from the the glove compartment door finish plate.

(c) Disconnect the airbag connector.

NOTICE:
When disconnecting the airbag connector, take care not to damage the airbag wire harness.

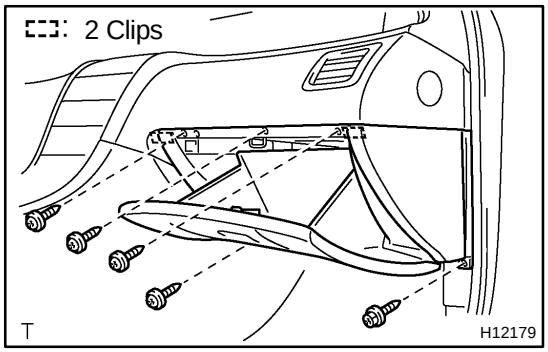

14. REMOVE LOWER PANEL
(a) Remove the 5 screws.
(b) Using a screwdriver, remove the lower panel, then disconnect the connector.
HINT:
Tape the screwdriver tip before use.

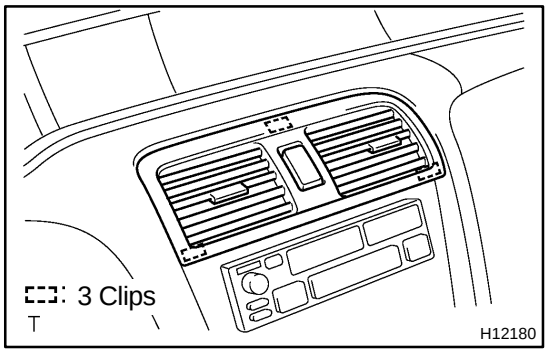

15. REMOVE LH REGISTER
Using a screwdriver, remove the LH register, then disconnect the connector.
HINT:
Tape the screwdriver tip before use.

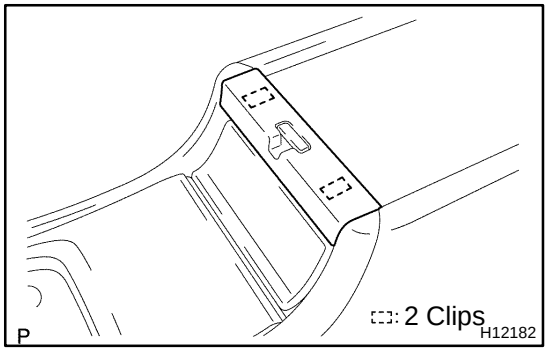

16. Floor shift:
REMOVE UPPER REAR CONSOLE PANEL
Using a screwdriver, remove the upper rear console panel.
HINT:
Tape the screwdriver tip before use.

17. Floor shift:
REMOVE FRONT ASH RECEPTACLE
HINT:
Do not pull the front ash receptacle door when removing the front ash receptacle.

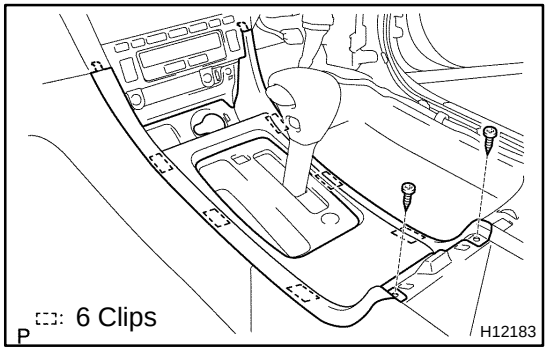

18. Floor shift:
REMOVE UPPER CONSOLE PANEL
(a) Remove the 2 screws.
(b) Using a screwdriver, remove the upper console panel.
HINT:
Tape the screwdriver tip before use.

19. Floor shift:
REMOVE CUP HOLDER

20. Floor shift:
REMOVE REAR CONSOLE BOX

(a) Remove the console box plate.

(b) Remove the 2 screws, 3 bolts and rear console box, then disconnect the connector.

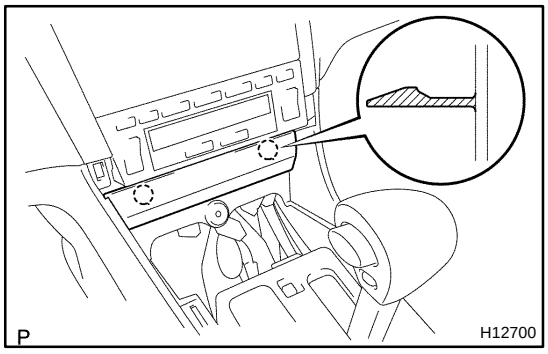

21. Floor shift:
REMOVE CONSOLE BOX HOLE COVER

Using a screwdriver, remove the console box hole cover.

HINT:

Tape the screwdriver tip before use.

22. Floor shift:
REMOVE RADIO ASSEMBLY WITH HEATER CONTROL ASSEMBLY

(a) Except TAIWAN:
Remove the 4 bolts and radio assembly with heater control assembly, then disconnect the connectors.

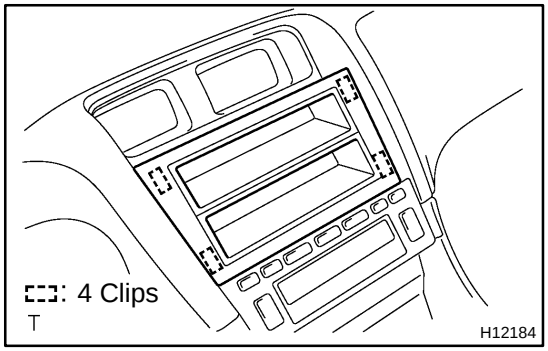

(b) TAIWAN:
Using a screwdriver, remove the center cluster finish panel.

HINT:

Tape the screwdriver tip before use.

(c) TAIWAN:
Remove the 4 bolts and opening covers with heater control assembly, then disconnect the connectors.

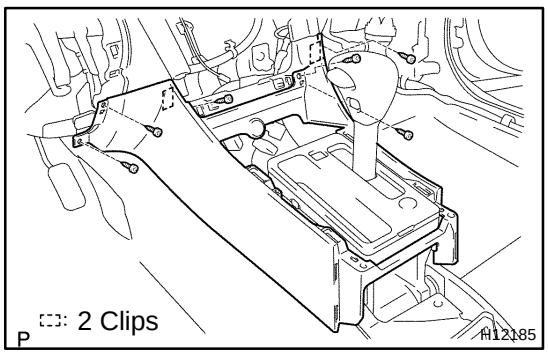

23. Floor shift:
REMOVE FRONT CONSOLE BOX

(a) Remove the 6 screws.

(b) Using a screwdriver, remove the front console box.

HINT:

Tape the screwdriver tip before use.

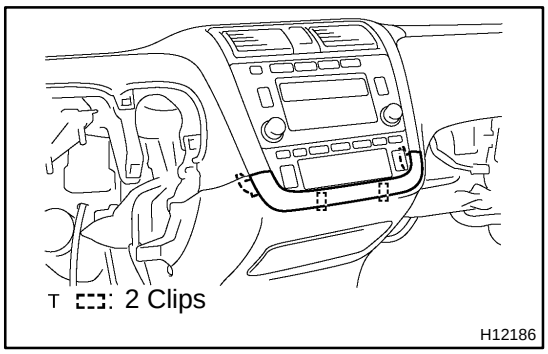

24. Column shift:
REMOVE LOWER COVER

Using a screwdriver, remove the lower cover.

HINT:

Tape the screwdriver tip before use.

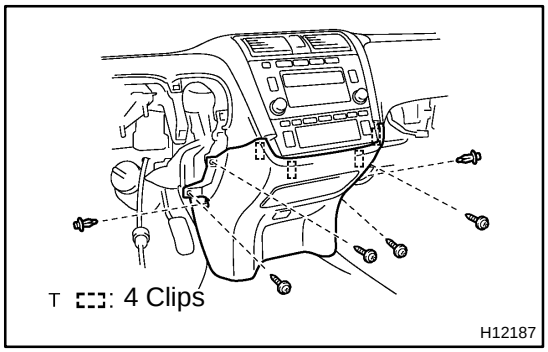

25. Column shift:
REMOVE FINISH PANEL

(a) Remove the 4 screws and 2 clips.

(b) Using a screwdriver, remove the finish panel, then disconnect the connector.

HINT:

Tape the screwdriver tip before use.

(c) Remove the 4 screws and front ash receptacle.

26. Column shift:
REMOVE RADIO ASSEMBLY WITH HEATER CONTROL ASSEMBLY

Remove the 4 bolts and radio assembly with heater control assembly.

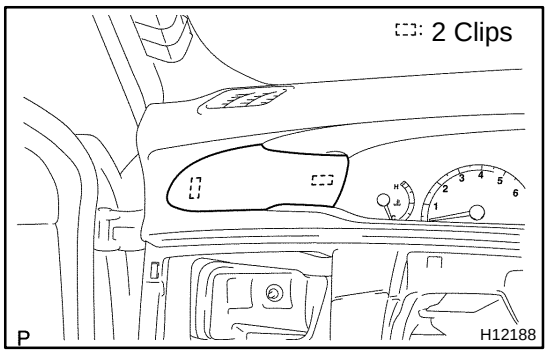

27. REMOVE SPEAKER OPENING COVER ASSEMBLY

(a) Using a screwdriver, remove the speaker opening cover assembly, then disconnect the connector.

HINT:

Tape the screwdriver tip before use.

(b) Employ the same manner described above to the other side.

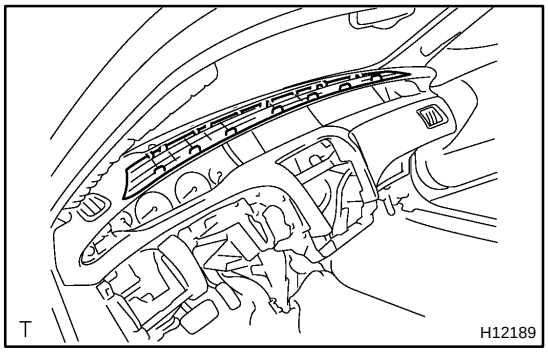

28. REMOVE UPPER CLUSTER FINISH PANEL

Using a screwdriver, remove the upper cluster finish panel.

HINT:

Tape the screwdriver tip before use.

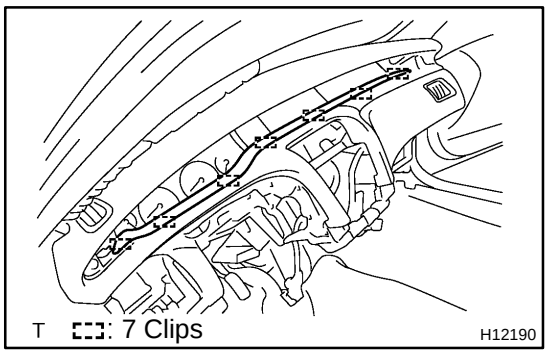

29. REMOVE LOWER CLUSTER FINISH PANEL

Using a screwdriver, remove the lower cluster finish panel.

HINT:

Tape the screwdriver tip before use.

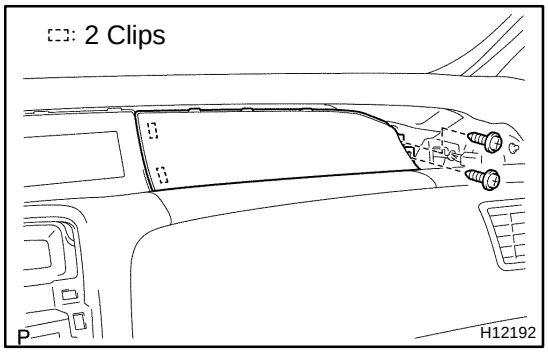

30. REMOVE CLUSTER FINISH PANEL

(a) Remove the 2 screws.

(b) Using a screwdriver, remove the cluster finish panel.

HINT:

Tape the screwdriver tip before use.

31. REMOVE END FINISH PANEL

32. REMOVE MULTI INFORMATION DISPLAY

33. REMOVE COMBINATION METER

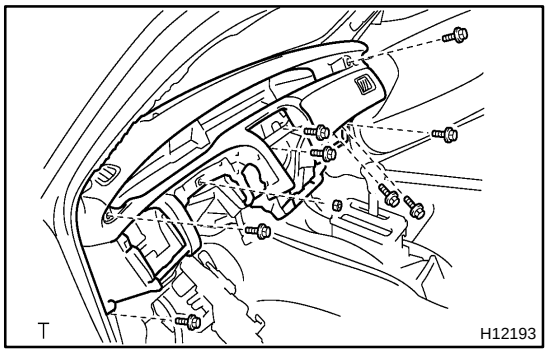

34. REMOVE INSTRUMENT PANEL SAFETY PAD

(a) Remove the 2 bolts from the passenger airbag assembly.
Torque: 20 N·m (204 kgf·cm, 15 ft·lbf)

(b) Remove the 6 bolts and nut.

(c) Disconnect the connectors.

(d) Remove the bolts and ground terminals.

(e) Remove the instrument panel safety pad.

35. REMOVE INSTRUMENT PANEL TO COWL BRACE

36. REMOVE NO. 2 INSTRUMENT PANEL TO COWL BRACE

37. REMOVE NO. 1 HEATER TO REGISTER DUCT

38. REMOVE INSTRUMENT PANEL REINFORCEMENT

INSTRUMENT PANEL

BO2PU-02

COMPONENTS

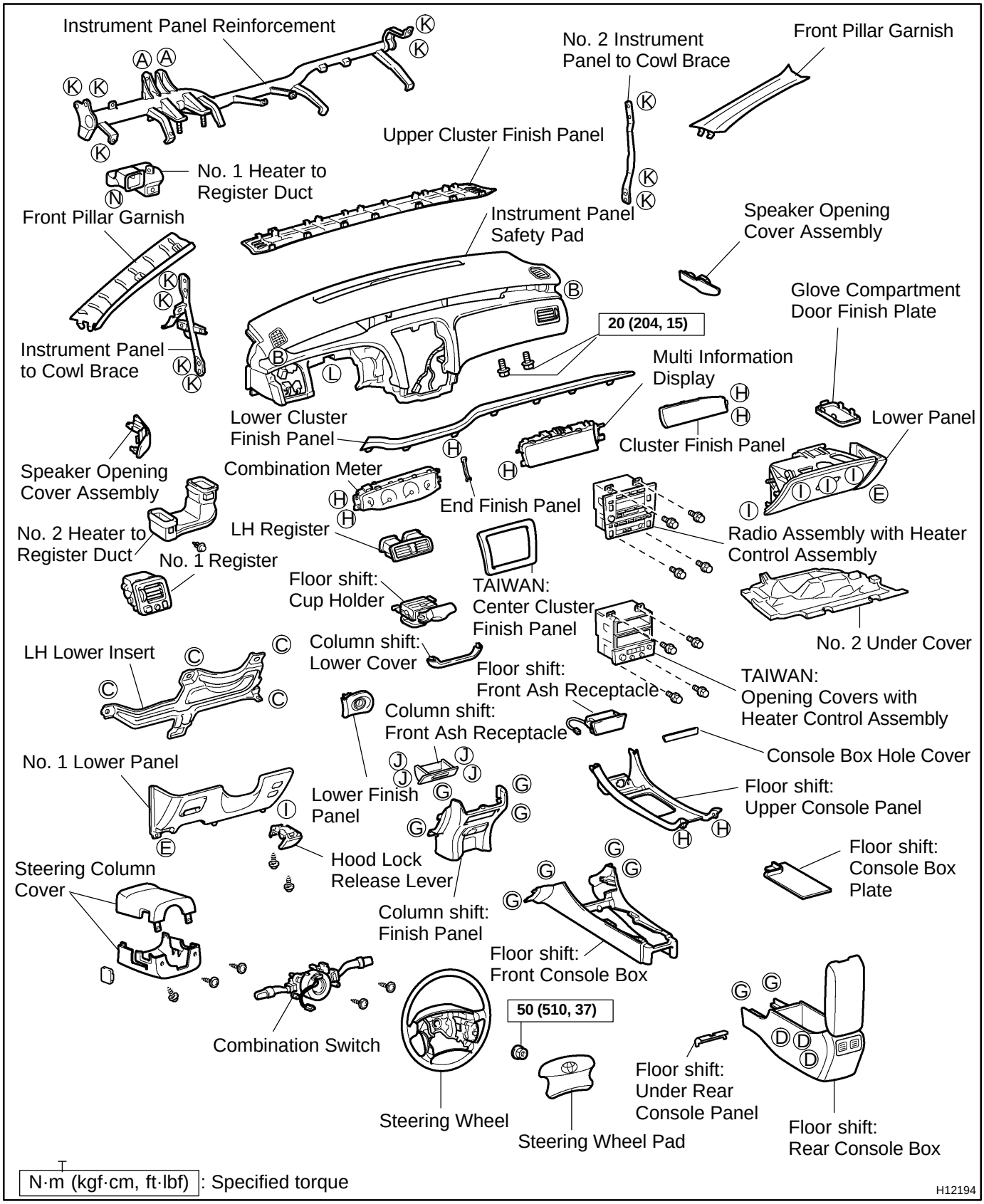

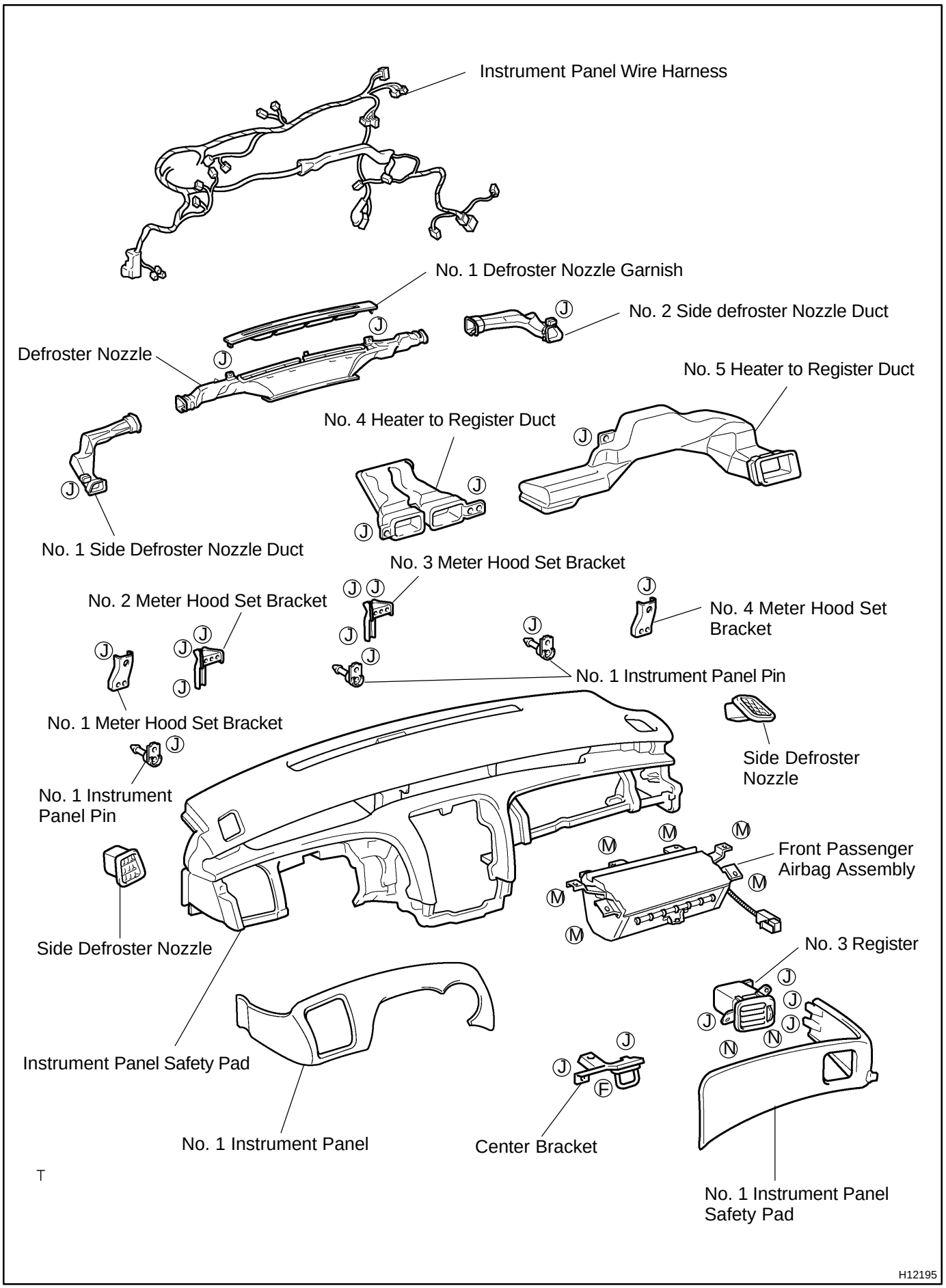
Instrument Panel Wire Harness
No. 1 Defroster Nozzle Garnish
No. 2 Side defroster Nozzle Duct
Defroster Nozzle
No. 5 Heater to Register Duct
No. 4 Heater to Register Duct
No. 1 Side Defroster Nozzle Duct
No. 3 Meter Hood Set Bracket
No. 2 Meter Hood Set Bracket
No. 4 Meter Hood Set Bracket
No. 1 Instrument Panel Pin
No. 1 Meter Hood Set Bracket
Side Defroster Nozzle
No. 1 Instrument Panel Pin
Front Passenger Airbag Assembly
Side Defroster Nozzle
No. 3 Register
Instrument Panel Safety Pad
No. 1 Instrument Panel
Center Bracket
No. 1 Instrument Panel Safety Pad
H12195

HINT:
Screw shapes and sizes are indicated in the table below. The codes (”A” - ”N”) correspond to those indicated on the previous page.

mm (in.)

	Shape	Size		Shape	Size		Shape	Size
Ⓐ	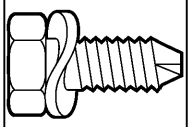	ø = 8 (0.31) L = 20 (0.79)	Ⓑ	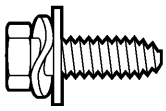	ø = 6 (0.24) L = 20 (0.79)	Ⓒ	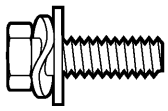	ø = 6 (0.24) L = 20 (0.79)
Ⓓ	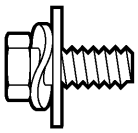	ø = 6 (0.24) L = 16 (0.63)	Ⓔ		ø = 6 (0.24) L = 18 (0.71)	Ⓕ	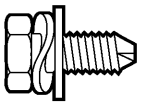	ø = 6 (0.24) L = 16 (0.63)
Ⓖ		ø = 5.22 (0.2055) L = 20 (0.79)	Ⓗ		ø = 5.22 (0.2055) L = 16 (0.63)	Ⓘ		ø = 5 (0.20) L = 16 (0.63)
Ⓙ	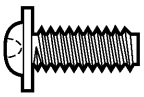	ø = 5 (0.20) L = 14 (0.55)	Ⓚ	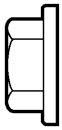	ø = 8 (0.31)	Ⓛ	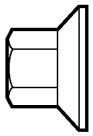	ø = 6 (0.24)
Ⓜ	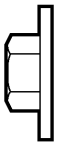	ø = 6 (0.24)	Ⓝ	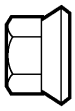	ø = 6 (0.24)			

T

H12196

BO2PW-01

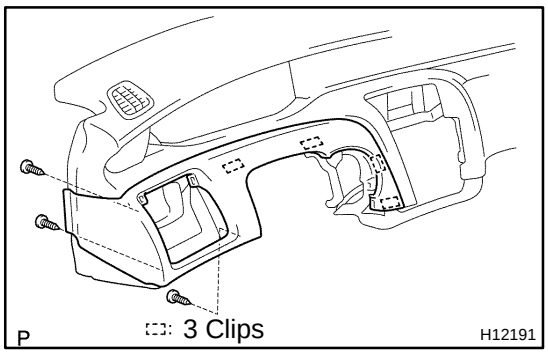

DISASSEMBLY

1. REMOVE NO. 1 INSTRUMENT PANEL

(a) Remove the 3 screws.

(b) Using a screwdriver, remove the No.1 instrument panel.

HINT:

Tape the screwdriver tip before use.

2. REMOVE SIDE DEFROSTER NOZZLES

3. REMOVE NO. 1 DEFROSTER NOZZLE GARNISH

4. REMOVE NO. 1 INSTRUMENT PANEL PINS

5. REMOVE NO. 1 SIDE DEFROSTER NOZZLE DUCT

6. REMOVE NO. 2 SIDE DEFROSTER NOZZLE DUCT

7. REMOVE DEFROSTER NOZZLE

8. REMOVE NO. 5 HEATER TO REGISTER DUCT

9. REMOVE NO. 4 HEATER TO REGISTER DUCT

10. REMOVE METER HOOD SET BRACKETS

11. REMOVE CENTER BRACKET

12. REMOVE INSTRUMENT PANEL WIRE HARNESS

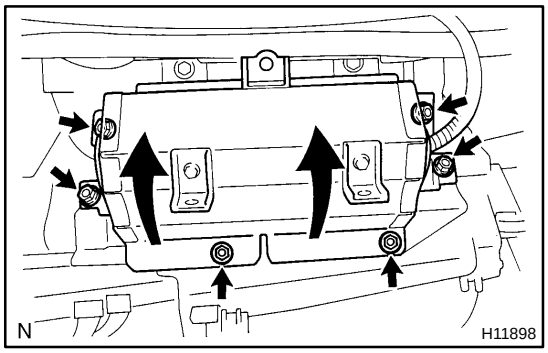

13. REMOVE FRONT PASSENGER AIRBAG ASSEMBLY

Remove the 6 nuts and front passenger airbag assembly as shown in the illustration.

CAUTION:

- ★ **Do not store the front passenger airbag assembly with the airbag deployment side facing down.**
- ★ **Never disassemble the front passenger airbag assembly.**

NOTICE:

When removing the front passenger airbag assembly, take care not to damage the wire harness.

14. REMOVE NO. 1 INSTRUMENT PANEL SAFETY PAD

15. REMOVE NO. 3 REGISTER

BO2PY-01

INSTALLATION

Installation is in the reverse order of removal (See page BO-90).

BO2PX-01

REASSEMBLY

Reassembly is in the reverse order of disassembly (See page BO-95).

BO2PV-01

REMOVAL

1. **REMOVE FRONT SEATS**
   (See page BO-105 or BO-112)
2. **REMOVE FRONT DOOR WEATHERSTRIPS**
3. **REMOVE FRONT PILLAR GARNISHES**
4. **REMOVE STEERING WHEEL PAD**
   (See page SR-12)
5. **REMOVE COLUMN COVERS**

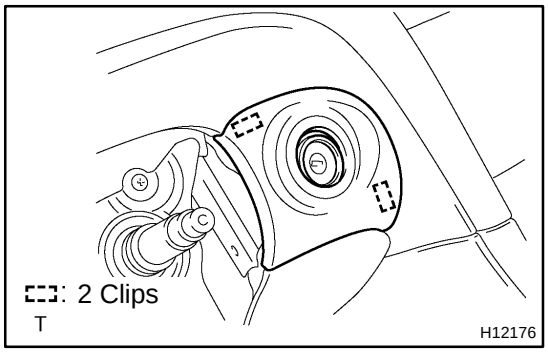

6. **REMOVE LOWER FINISH PANEL**

Using a screwdriver, remove the lower finish panel.

HINT:

Tape the screwdriver tip before use.

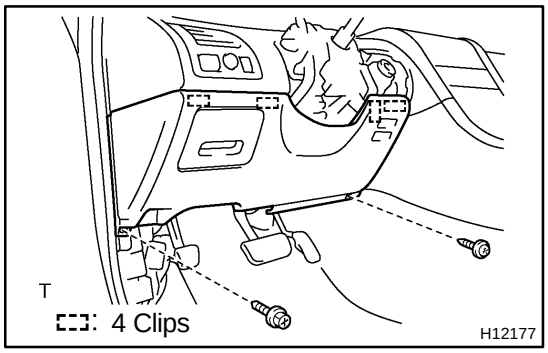

7. **REMOVE NO. 1 LOWER PANEL**

(a) Remove the 2 screws and hood lock release lever.

(b) Using a screwdriver, remove the No. 1 lower panel.

HINT:

Tape the screwdriver tip before use.

8. **REMOVE LH LOWER INSERT**
9. **REMOVE NO. 2 HEATER TO REGISTER DUCT**

Remove the 2 clips and heater to register duct.

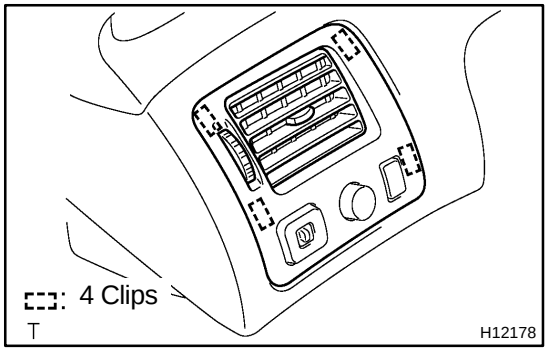

10. **REMOVE NO. 1 REGISTER**

Using a screwdriver, remove the No. 1 register, then disconnect the connectors.

HINT:

Tape the screwdriver tip before use.

11. **REMOVE STEERING COLUMN**
    (See page SR-12)
12. **REMOVE NO. 2 UNDER COVER**

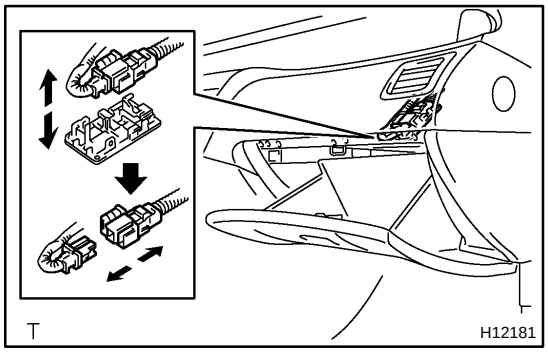

13. **DISCONNECT AIRBAG CONNECTOR**

(a) Using a screwdriver, pry out the glove compartment door finish plate inside the lower panel.

HINT:

Tape the screwdriver tip before use.

(b) Remove the connector from the the glove compartment door finish plate.

(c) Disconnect the airbag connector.

NOTICE:
When disconnecting the airbag connector, take care not to damage the airbag wire harness.

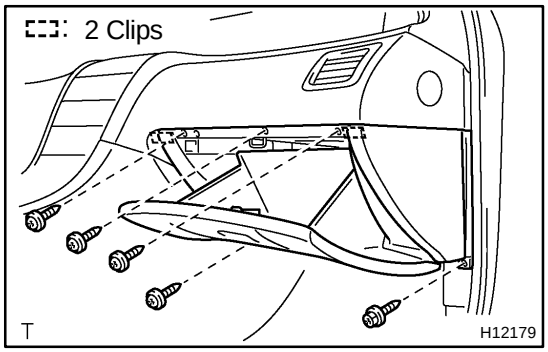

14. REMOVE LOWER PANEL
(a) Remove the 5 screws.
(b) Using a screwdriver, remove the lower panel, then disconnect the connector.
HINT:
Tape the screwdriver tip before use.

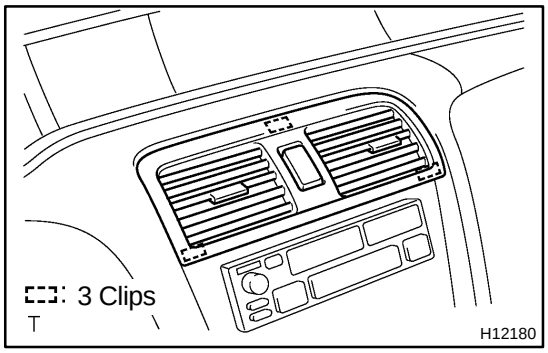

15. REMOVE LH REGISTER
Using a screwdriver, remove the LH register, then disconnect the connector.
HINT:
Tape the screwdriver tip before use.

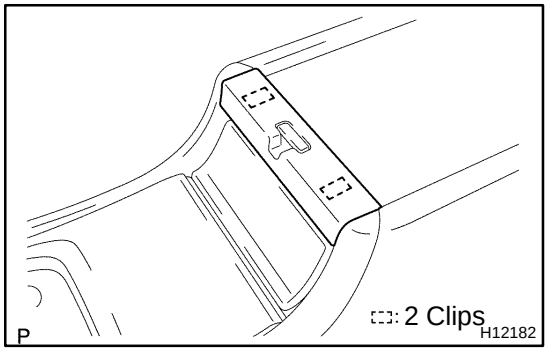

16. Floor shift:
REMOVE UPPER REAR CONSOLE PANEL
Using a screwdriver, remove the upper rear console panel.
HINT:
Tape the screwdriver tip before use.

17. Floor shift:
REMOVE FRONT ASH RECEPTACLE
HINT:
Do not pull the front ash receptacle door when removing the front ash receptacle.

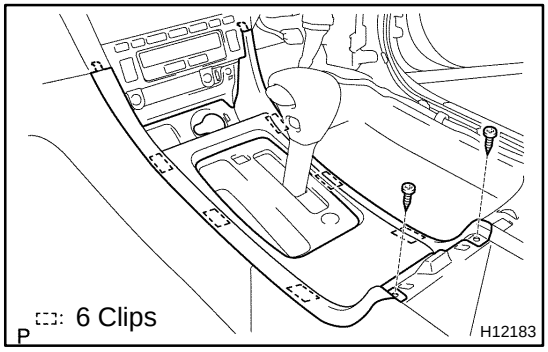

18. Floor shift:
REMOVE UPPER CONSOLE PANEL
(a) Remove the 2 screws.
(b) Using a screwdriver, remove the upper console panel.
HINT:
Tape the screwdriver tip before use.

19. Floor shift:
REMOVE CUP HOLDER

20. Floor shift:
REMOVE REAR CONSOLE BOX

(a) Remove the console box plate.

(b) Remove the 2 screws, 3 bolts and rear console box, then disconnect the connector.

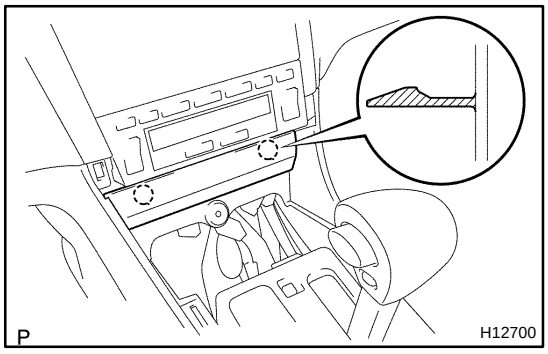

21. Floor shift:
REMOVE CONSOLE BOX HOLE COVER

Using a screwdriver, remove the console box hole cover.

HINT:

Tape the screwdriver tip before use.

22. Floor shift:
REMOVE RADIO ASSEMBLY WITH HEATER CONTROL ASSEMBLY

(a) Except TAIWAN:
Remove the 4 bolts and radio assembly with heater control assembly, then disconnect the connectors.

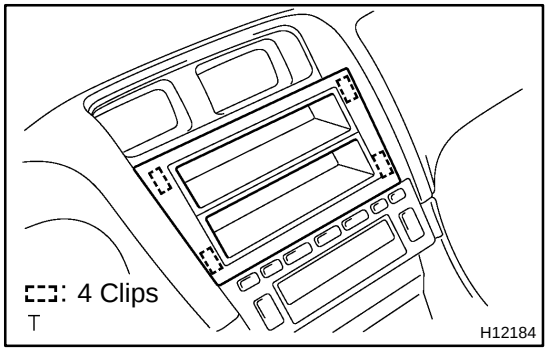

(b) TAIWAN:
Using a screwdriver, remove the center cluster finish panel.

HINT:

Tape the screwdriver tip before use.

(c) TAIWAN:
Remove the 4 bolts and opening covers with heater control assembly, then disconnect the connectors.

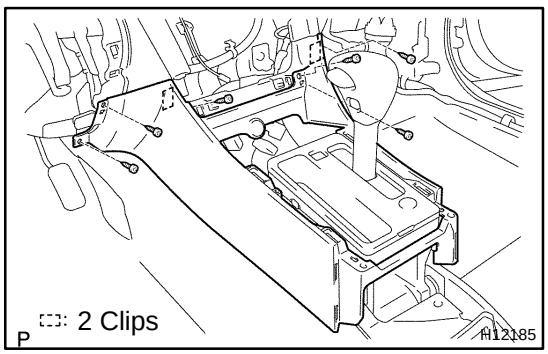

23. Floor shift:
REMOVE FRONT CONSOLE BOX

(a) Remove the 6 screws.

(b) Using a screwdriver, remove the front console box.

HINT:

Tape the screwdriver tip before use.

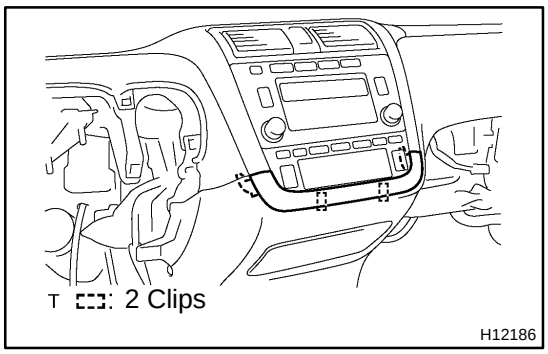

24. Column shift:
REMOVE LOWER COVER

Using a screwdriver, remove the lower cover.

HINT:

Tape the screwdriver tip before use.

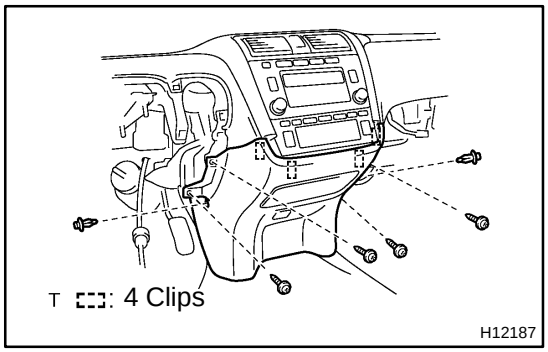

25. Column shift:
REMOVE FINISH PANEL

(a) Remove the 4 screws and 2 clips.

(b) Using a screwdriver, remove the finish panel, then disconnect the connector.

HINT:

Tape the screwdriver tip before use.

(c) Remove the 4 screws and front ash receptacle.

26. Column shift:
REMOVE RADIO ASSEMBLY WITH HEATER CONTROL ASSEMBLY

Remove the 4 bolts and radio assembly with heater control assembly.

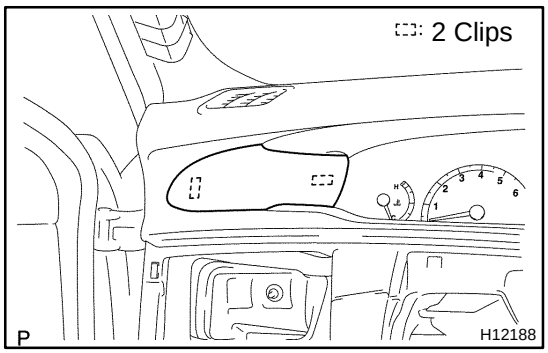

27. REMOVE SPEAKER OPENING COVER ASSEMBLY

(a) Using a screwdriver, remove the speaker opening cover assembly, then disconnect the connector.

HINT:

Tape the screwdriver tip before use.

(b) Employ the same manner described above to the other side.

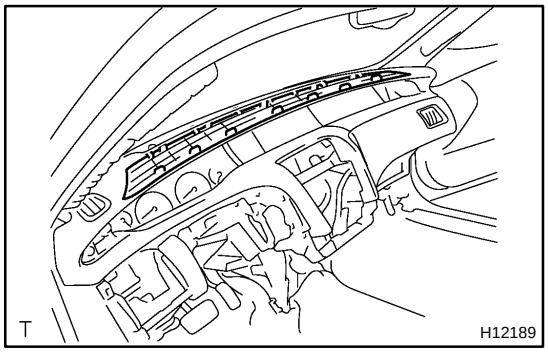

28. REMOVE UPPER CLUSTER FINISH PANEL

Using a screwdriver, remove the upper cluster finish panel.

HINT:

Tape the screwdriver tip before use.

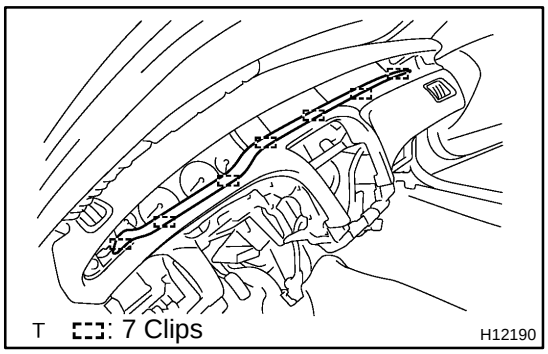

29. REMOVE LOWER CLUSTER FINISH PANEL

Using a screwdriver, remove the lower cluster finish panel.

HINT:

Tape the screwdriver tip before use.

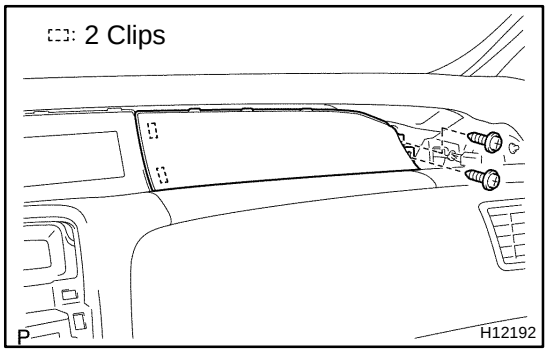

30. REMOVE CLUSTER FINISH PANEL

(a) Remove the 2 screws.

(b) Using a screwdriver, remove the cluster finish panel.

HINT:

Tape the screwdriver tip before use.

31. REMOVE END FINISH PANEL

32. REMOVE MULTI INFORMATION DISPLAY

33. REMOVE COMBINATION METER

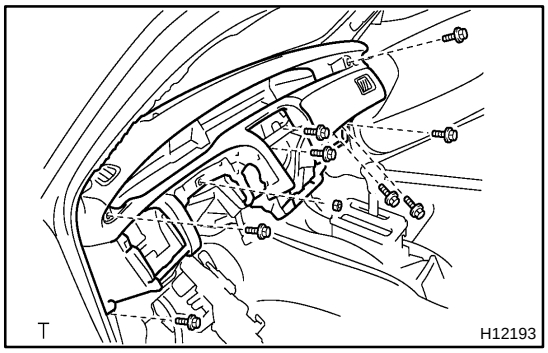

34. REMOVE INSTRUMENT PANEL SAFETY PAD

(a) Remove the 2 bolts from the passenger airbag assembly.
Torque: 20 N·m (204 kgf·cm, 15 ft·lbf)

(b) Remove the 6 bolts and nut.

(c) Disconnect the connectors.

(d) Remove the bolts and ground terminals.

(e) Remove the instrument panel safety pad.

35. REMOVE INSTRUMENT PANEL TO COWL BRACE

36. REMOVE NO. 2 INSTRUMENT PANEL TO COWL BRACE

37. REMOVE NO. 1 HEATER TO REGISTER DUCT

38. REMOVE INSTRUMENT PANEL REINFORCEMENT

BO2OZ-01

ADJUSTMENT

1. ADJUST LUGGAGE COMPARTMENT DOOR

(a) Using a clip remover, remove the 15 clips and luggage compartment door cover.

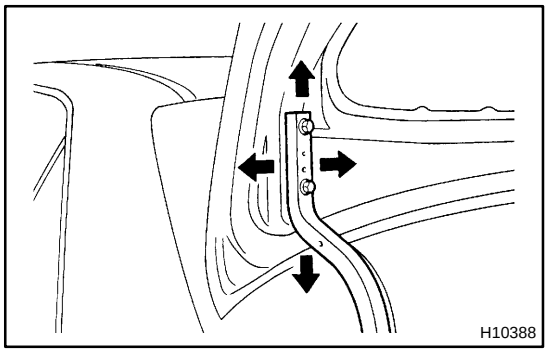

(b) For forward/rearward and left/right adjustment loosen the bolts.
Torque: 7.8 N·m (80 kgf·cm, 69 in.·lbf)

(c) For vertical adjustment of the front end of the door, increase or decrease the number of washers between the hinge and the door.
Torque: 7.8 N·m (80 kgf·cm, 69 in.·lbf)

2. ADJUST DOOR LOCK STRIKER

(a) Remove the LH and RH rear floor finish side plates.

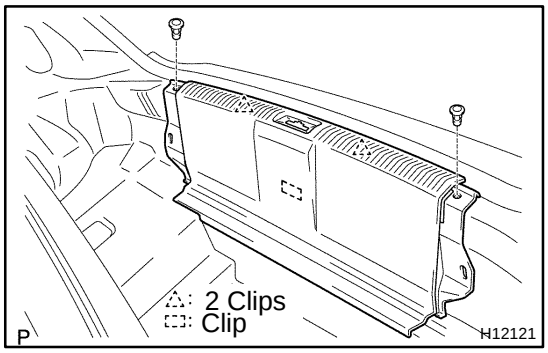

(b) Remove the rear floor finish plate.

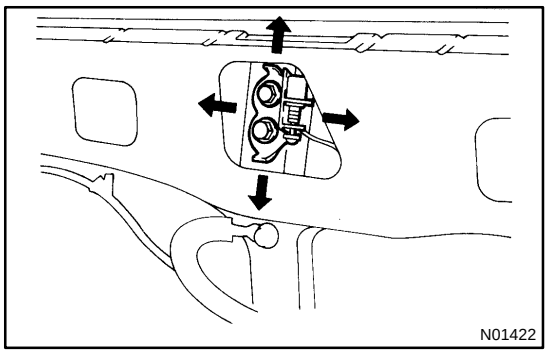

(c) Loosen the bolts to adjust.
Torque: 5.4 N·m (55 kgf·cm, 48 in.·lbf)

LUGGAGE COMPARTMENT DOOR AND HINGE

BO2OW-02

COMPONENTS

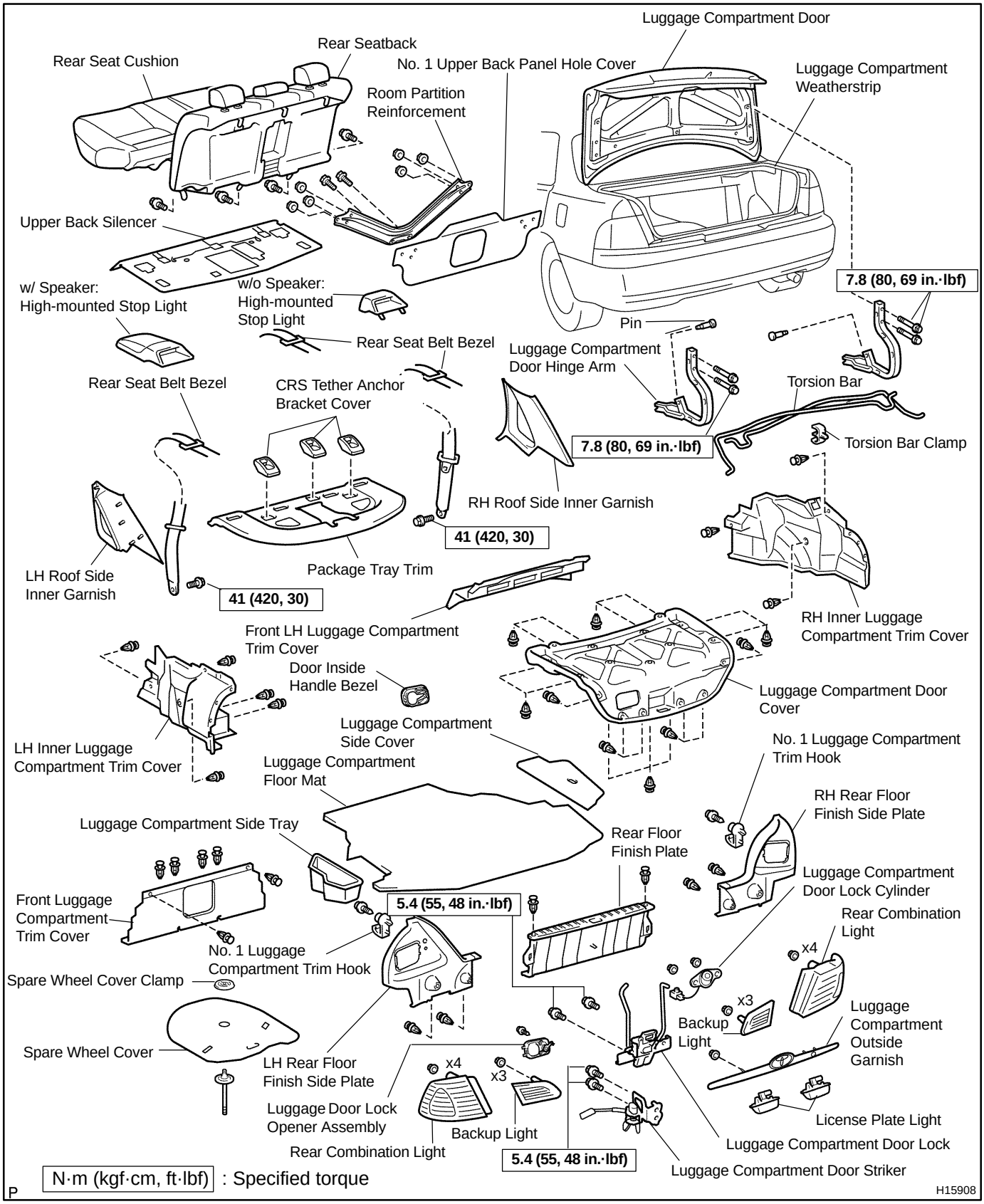

BO2OY-02

DISASSEMBLY

1. REMOVE LUGGAGE COMPARTMENT DOOR LOCK

(a) Disconnect the control links from the luggage compartment door lock cylinder and door lock opener assembly.

(b) w/ Power door opener:
Disconnect the connector.

(c) Remove the 2 bolts and door lock.
Torque: 5.4 N·m (55 kgf·cm, 48 in.·lbf)

(d) Remove the door lock cover from the door lock.

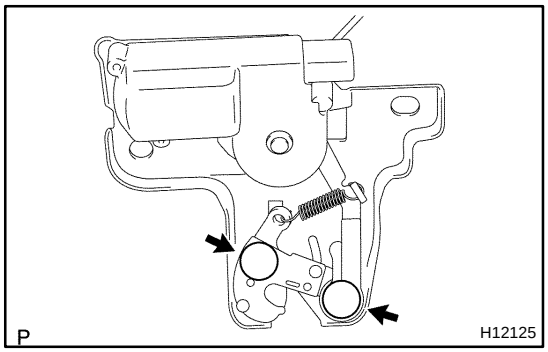

HINT:
At the time of reassembly, please refer to the following item.
Apply MP grease to the sliding and rotating parts of the door lock.

2. REMOVE LUGGAGE COMPARTMENT DOOR LOCK OPENER ASSEMBLY

Remove the bolt and luggage compartment door lock opener assembly.

3. REMOVE LUGGAGE COMPARTMENT DOOR LOCK CYLINDER

4. REMOVE LUGGAGE COMPARTMENT DOOR OUTSIDE GARNISH

(a) Remove the nut.

(b) Remove the luggage compartment door outside garnish by compressing clips from the inside to disengage them.

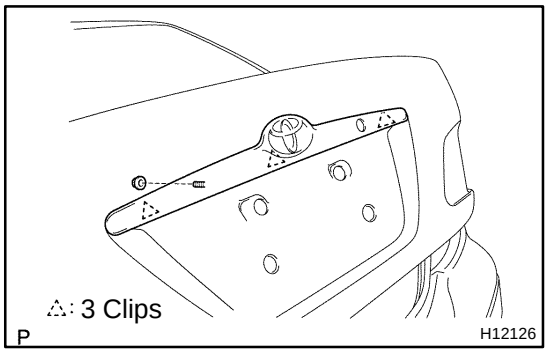

5. REMOVE BACKUP LIGHTS

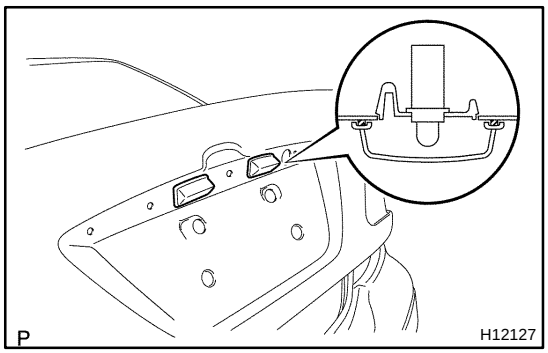

6. REMOVE LICENSE PLATE LIGHTS

(a) Disconnect the connectors.

(b) Using a screwdriver, remove the license plate lights.

HINT:
Tape the screwdriver tip before use.

BO2P1-01

INSTALLATION

Installation is in the reverse order of removal (See page BO-31).

BO2P0-01

REASSEMBLY

Reassembly is in the reverse order of disassembly (See page BO-34).

BO41D-01

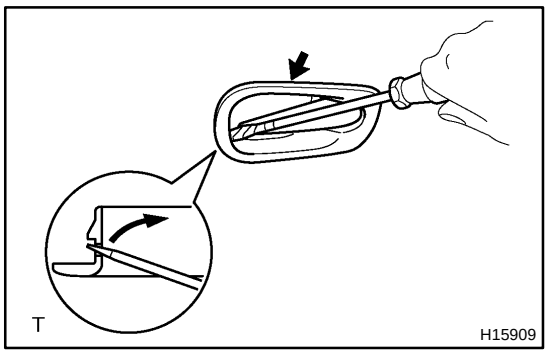

REMOVAL

1. REMOVE DOOR INSIDE HANDLE BEZEL

Using a screwdriver, remove the door inside handle bezel as shown in the illustration.

HINT:

Tape the screwdriver tip before use.

2. REMOVE LUGGAGE COMPARTMENT DOOR COVER

Using a clip remover, remove the 15 clips and luggage compartment door cover.

3. REMOVE LUGGAGE COMPARTMENT DOOR

(a) Disconnect the connectors.

(b) Disconnect the clamps of wire harness.

(c) Remove the 4 bolts and luggage compartment door.

Torque: 7.8 N·m (80 kgf·cm, 69 in.·lbf)

4. REMOVE REAR SEAT (See page BO-119)

5. REMOVE NO. 1 UPPER BACK PANEL HOLE COVER

6. REMOVE ROOM PARTITION REINFORCEMENT

(a) Remove the 6 nuts.

(b) Remove the 2 bolts and room partition reinforcement.

7. REMOVE FRONT LH LUGGAGE COMPARTMENT TRIM COVER

8. REMOVE FRONT UPPER LUGGAGE COMPARTMENT TRIM COVER

9. REMOVE LUGGAGE COMPARTMENT FLOOR MAT

10. REMOVE LH AND RH REAR FLOOR FINISH SIDE PLATES

(a) Remove the 2 screws and No. 1 luggage compartment trim hooks.

(b) Remove the 4 clips and rear floor finish side plates.

11. REMOVE LUGGAGE COMPARTMENT SIDE TRAY

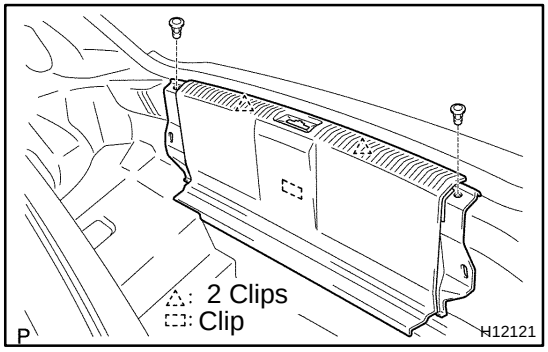

12. REMOVE REAR FLOOR FINISH PLATE

(a) Using a clip remover, remove the 2 clips.

(b) Remove the rear floor finish plate.

13. REMOVE LH AND RH INNER LUGGAGE COMPARTMENT TRIM COVERS

14. REMOVE FRONT LUGGAGE COMPARTMENT TRIM COVER

15. REMOVE SPARE WHEEL COVER AND CLAMP

16. REMOVE REAR COMBINATION LIGHTS

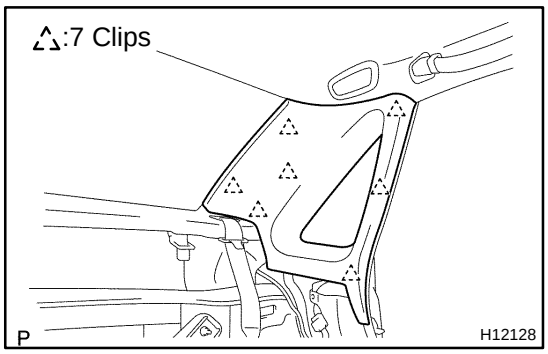

17. REMOVE ROOF SIDE INNER GARNISH

(a) Using a screwdriver, remove the roof side inner garnish.

HINT:

Tape the screwdriver tip before use.

(b) Employ the same manner described above to the other side.

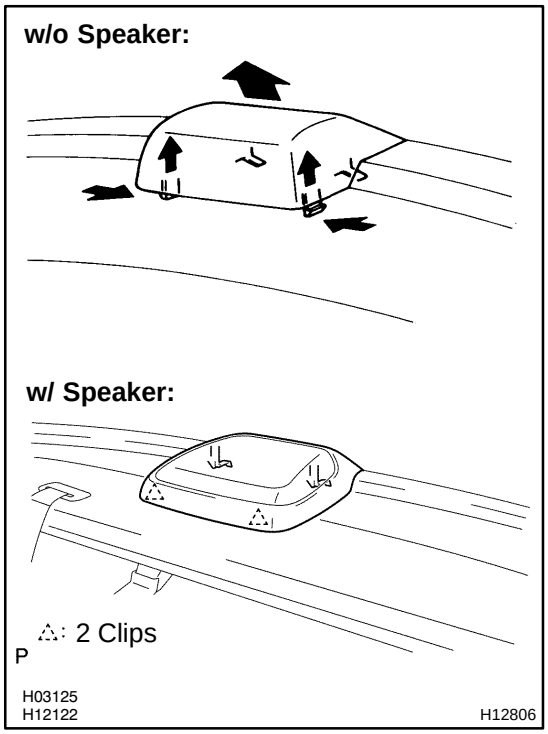

18. REMOVE HIGH-MOUNTED STOP LIGHT

Remove the high-mounted stop light as shown in the illustration, then disconnect the connector.

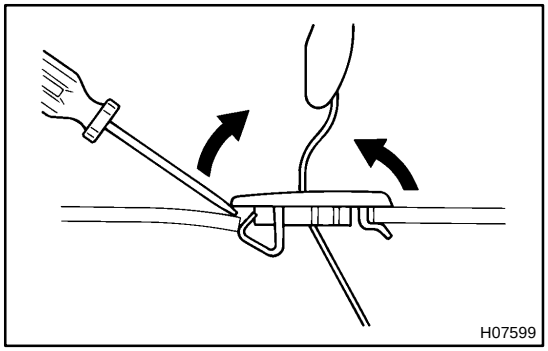

19. REMOVE PACKAGE TRAY TRIM

(a) Using a screwdriver, remove the 3 rear seat belt bezel.

HINT:

Tape the screwdriver tip before use.

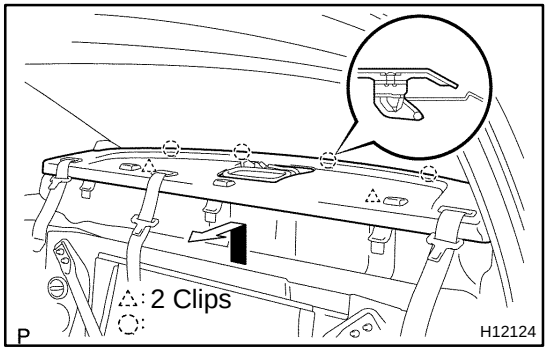

(b) Remove the package tray trim as shown in the illustration.

20. REMOVE UPPER BACK SILENCER

21. REMOVE TORSION BAR

(a) Disconnect the torsion bars from the torsion bar clamp, then remove the torsion bar clamp.

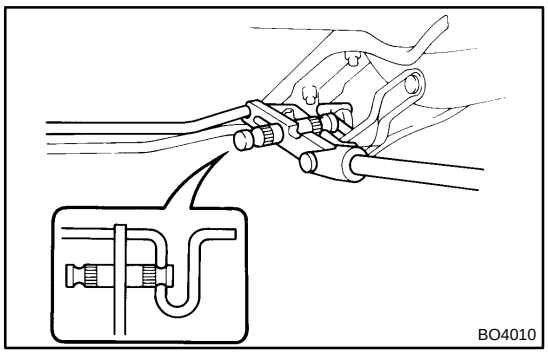

(b) Install SST to the torsion bar on the hinge side.
SST 09804-24010

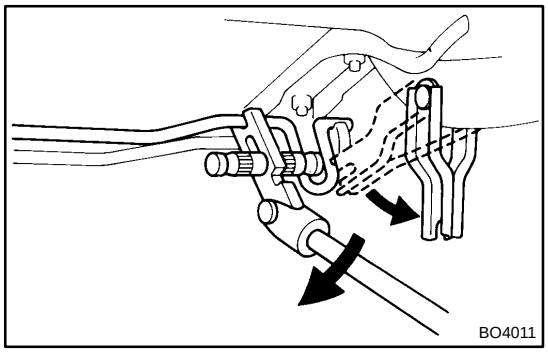

(c) Push down on SST, and pull the luggage compartment door hinge from the torsion bar.

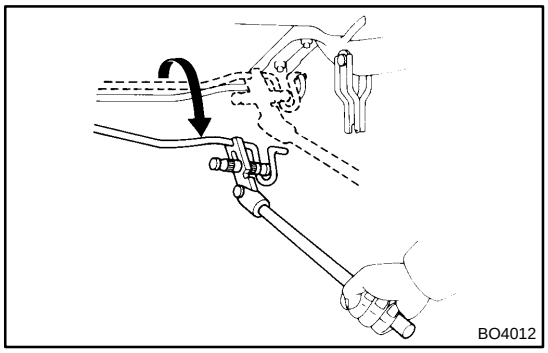

(d) Slowly lift SST, and remove the torsion bar from the torsion bar bracket with SST.

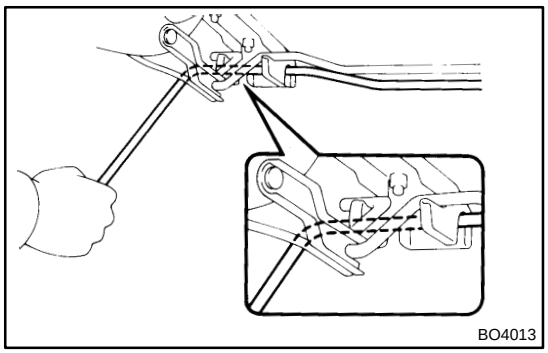

(e) Disconnect the torsion bar from the bracket.
(f) Employ the same manner described above to the other side.

HINT:
Check the color of marks on the torsion bar when replacing or installing the torsion bar.

Side	Color
RH	Yellow
LH	None

22. REMOVE LUGGAGE COMPARTMENT DOOR HINGE ARMS AND PINS

23. REMOVE LUGGAGE COMPARTMENT DOOR WEATHERSTRIP

OUTSIDE REAR VIEW MIRROR

BO41E-01

COMPONENTS

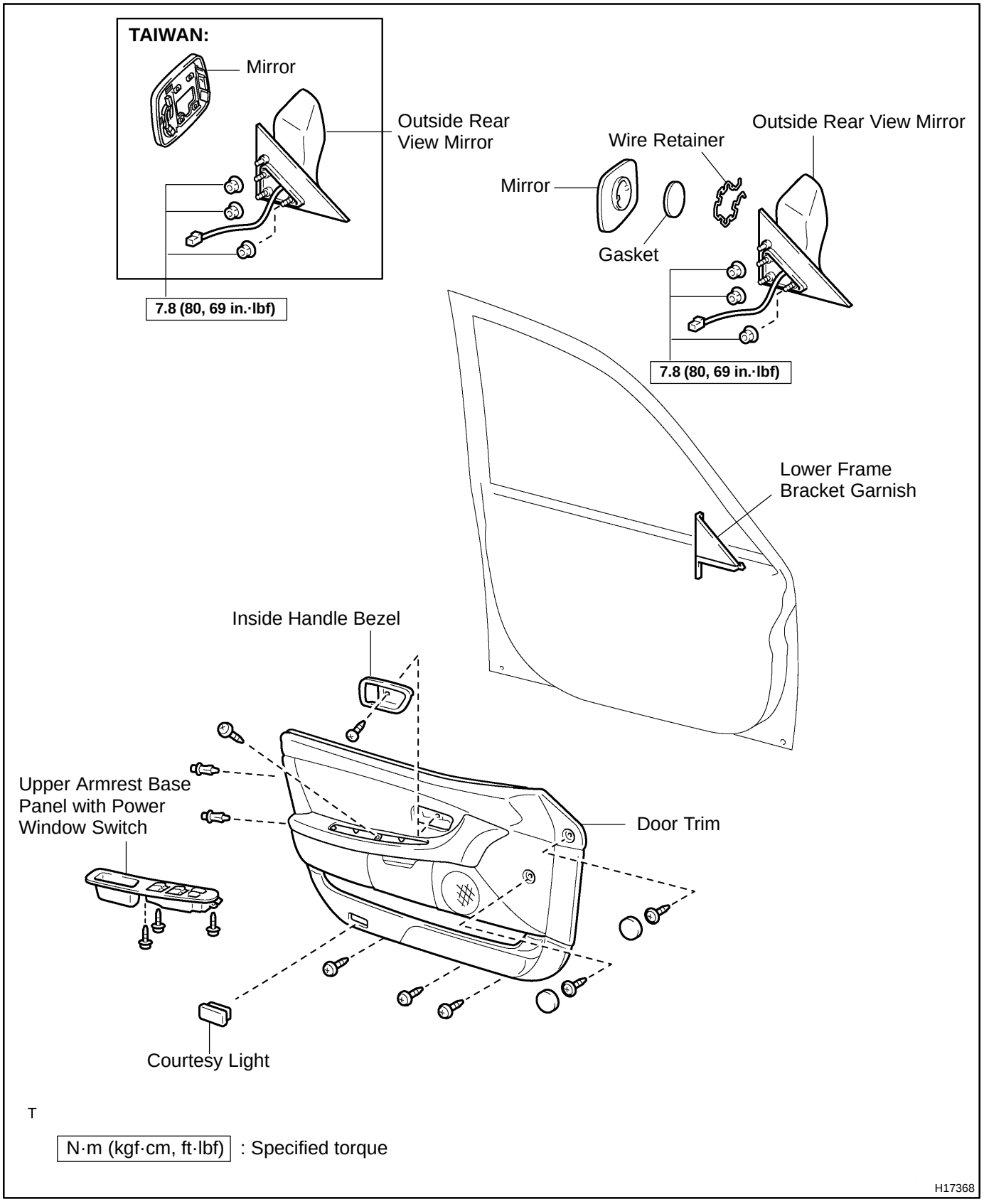

BO41H-01

INSTALLATION

Installation is in the reverse order of removal (See page BO-26).

BO41F-01

REMOVAL

1. REMOVE INSIDE HANDLE BEZEL

(a) Using a screwdriver, remove the cover.

HINT:

Tape the screwdriver tip before use.

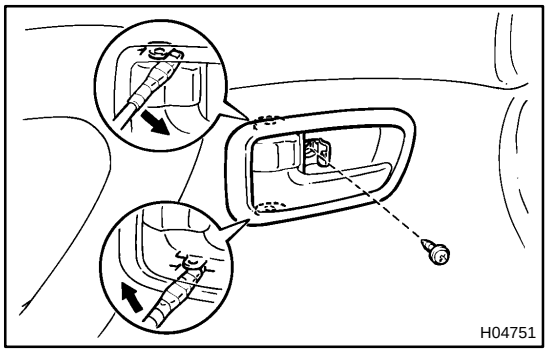

(b) Remove the screw.

(c) Using a screwdriver, remove the inside handle bezel as shown in the illustration.

HINT:

Tape the screwdriver tip before use.

2. REMOVE COURTESY LIGHT

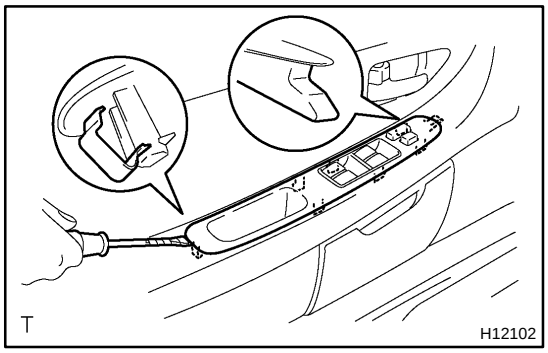

3. REMOVE UPPER ARMREST BASE PANEL WITH POWER WINDOW SWITCH

(a) Using a screwdriver, remove the upper armrest base panel with power window switch.

HINT:

Tape the screwdriver tip before use.

(b) Disconnect the connector.

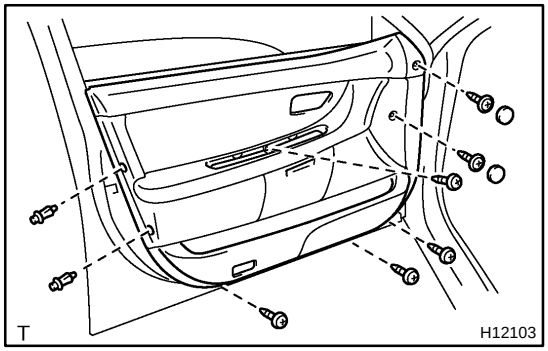

4. REMOVE DOOR TRIM

(a) Using a screwdriver, remove the 2 caps.

HINT:

Tape the screwdriver tip before use.

(b) Remove the 6 screws and clip.

(c) Pull the trim upward to remove it.

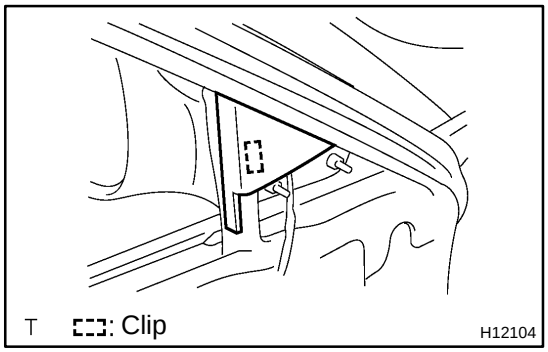

5. REMOVE LOWER FRAME BRACKET GARNISH

Using a screwdriver, remove the lower frame bracket as shown in the illustration.

HINT:

Tape the screwdriver tip before use.

6. REMOVE OUTSIDE REAR VIEW MIRROR

(a) Disconnect the connector.

(b) Remove the 3 nuts and outside rear view mirror.

Torque: 7.8 N·m (80 kgf·cm, 69 ft·lbf)

BO41G-01

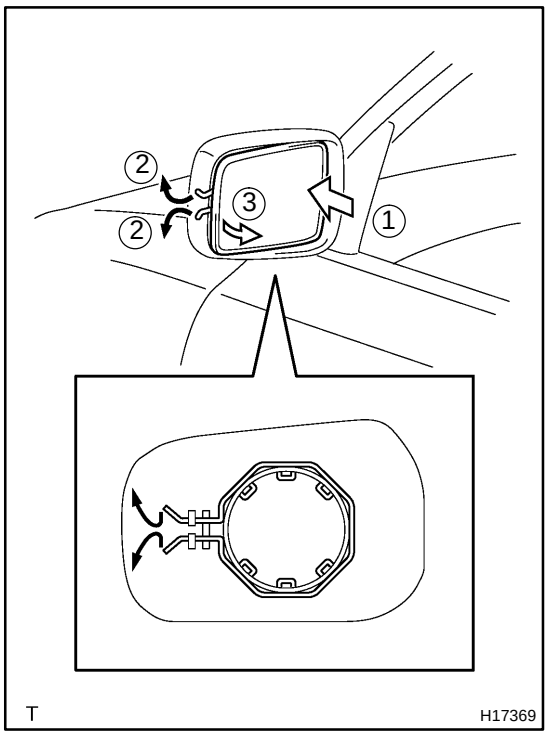

REPLACEMENT

1. Except TAIWAN:

IF NECESSARY, REMOVE MIRROR

(a) Press the inboard end of the mirror inward to access the back of the mirror.

(b) Reach fingers behind mirror and unlatch both ends of the wire retainer.

(c) Remove the mirror.

(d) w/ Heated mirrors:
Disconnect the heater wires.

NOTICE:

Be careful not to damage the wires on heated mirrors. Disconnect the wires from the back side of the heater.

2. Except TAIWAN:

INSTALL MIRROR

(a) w/ Heated mirrors:
Connect the heater wires.

(b) Completely install the wire retainer to the mirror.

(c) Carefully align the 2 alignment tabs to the slots on the motor.

(d) Press the mirror firmly into place to engage all 6 lugs of the wire retainer.

(e) Press on glass with open palm and rock the mirror through its full range of motion to engage all 6 lugs only low forces will be required.

NOTICE:

Confirm that all 6 wire retainer lugs are completely engaged to the mirror housing by gently pulling on the mirror edges.

(f) Confirm mirror operation through full range of motion.

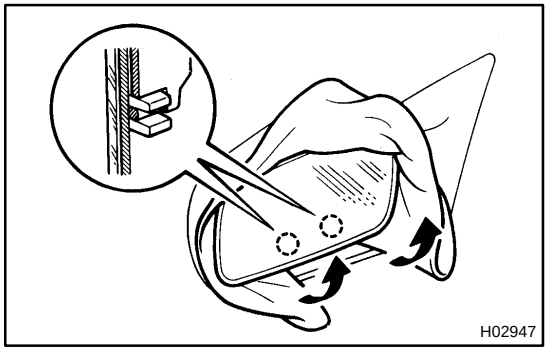

3. TAIWAN:

IF NECESSARY, REMOVE MIRROR

(a) Insert a shop rag between the mirror and the mirror body.

(b) Pull up the lower side of the shop rag to disconnect the mirror joint.

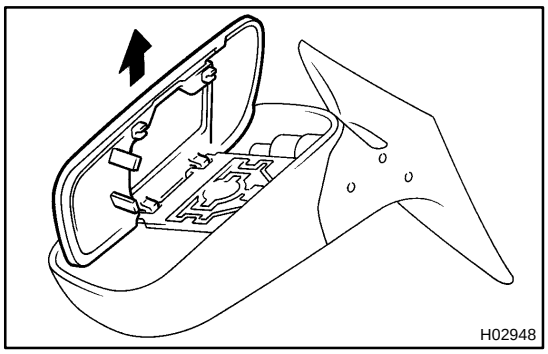

(c) Pull up the mirror and disconnect it.

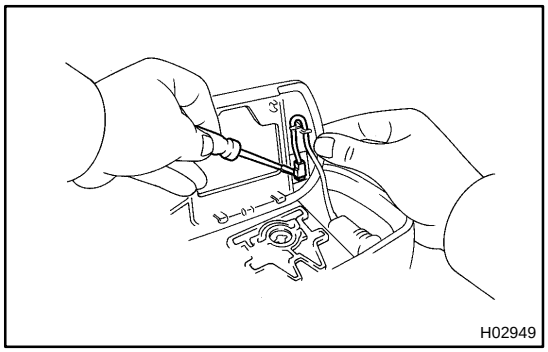

(d) w/ Heated mirrors:
Disconnect the connector.

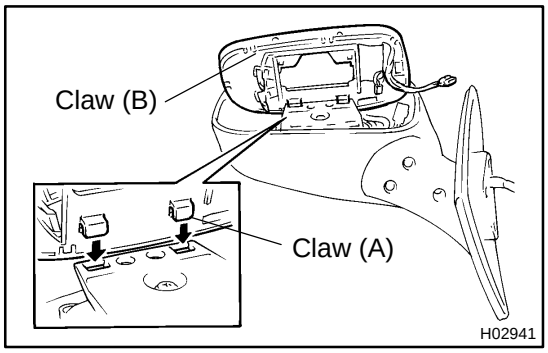

4. TAIWAN:
INSTALL MIRROR

(a) w/ Heated mirrors:
Connect the connector.

(b) Connect the claws (A) and set the mirror to the mirror body.

(c) Push the mirror to connect the claws (B) and set it.

OUTSIDE REAR VIEW MIRROR

BO41E-01

COMPONENTS

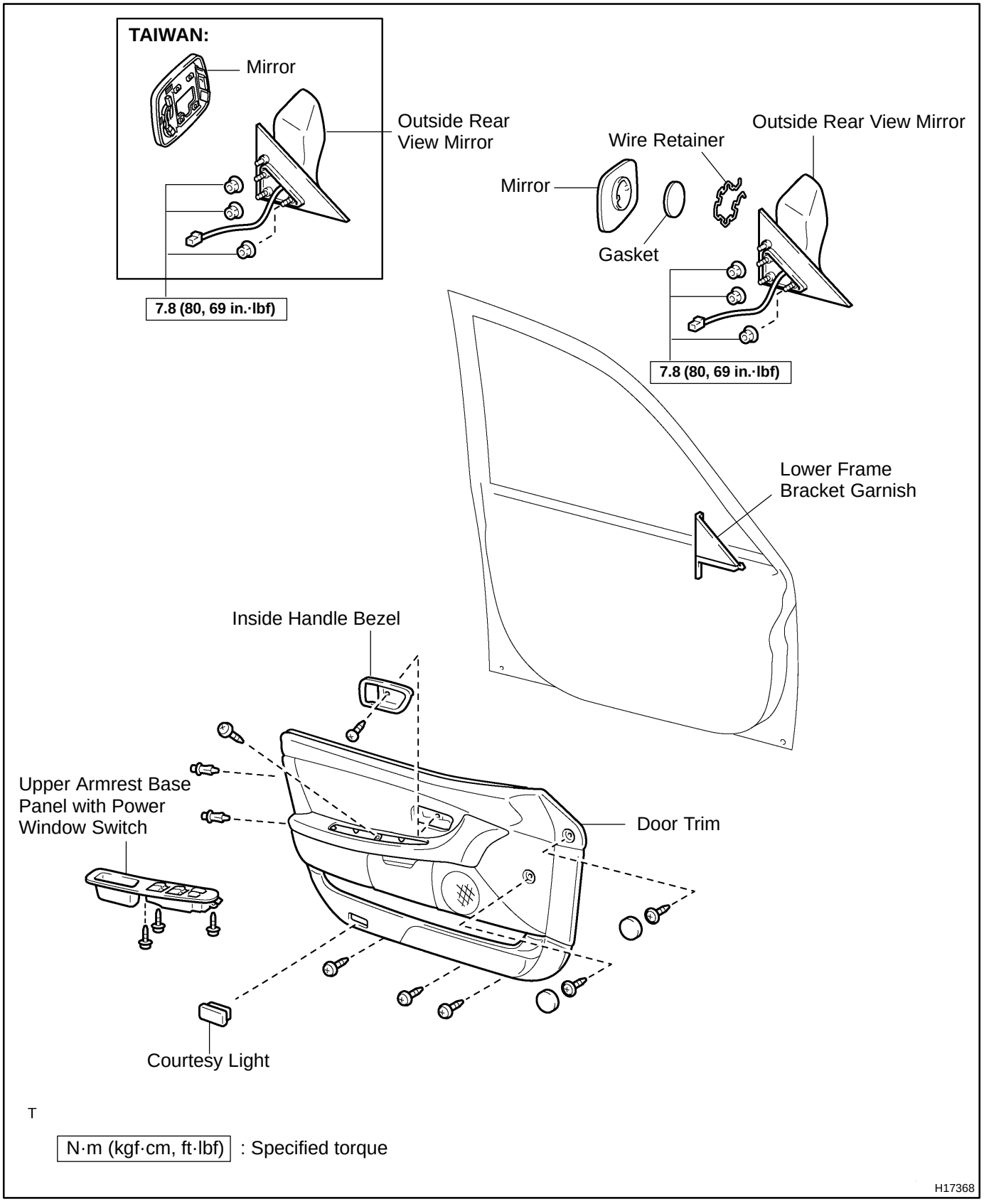

BO41H-01

INSTALLATION

Installation is in the reverse order of removal (See page BO-26).

BO41F-01

REMOVAL

1. REMOVE INSIDE HANDLE BEZEL

(a) Using a screwdriver, remove the cover.

HINT:

Tape the screwdriver tip before use.

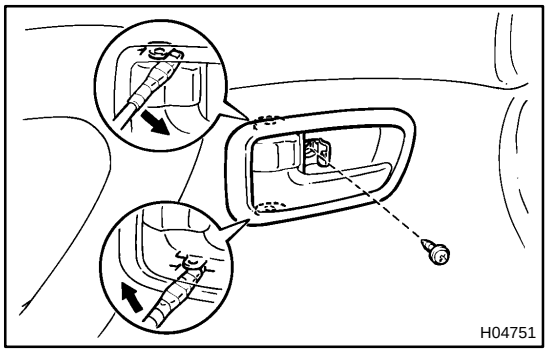

(b) Remove the screw.

(c) Using a screwdriver, remove the inside handle bezel as shown in the illustration.

HINT:

Tape the screwdriver tip before use.

2. REMOVE COURTESY LIGHT

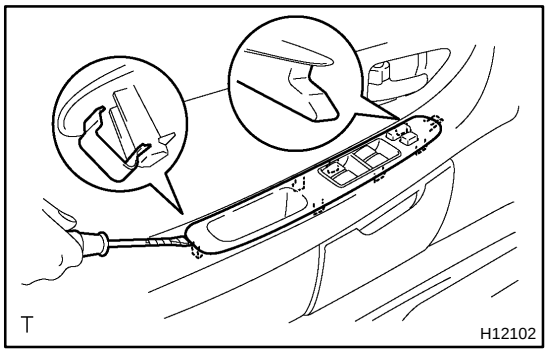

3. REMOVE UPPER ARMREST BASE PANEL WITH POWER WINDOW SWITCH

(a) Using a screwdriver, remove the upper armrest base panel with power window switch.

HINT:

Tape the screwdriver tip before use.

(b) Disconnect the connector.

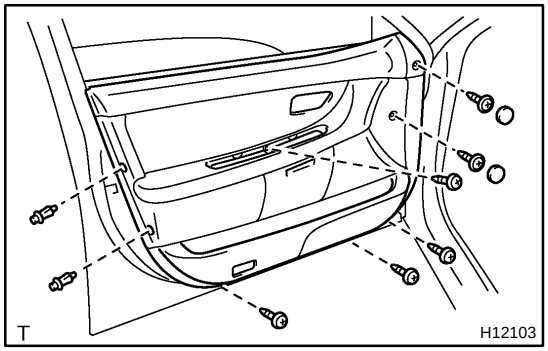

4. REMOVE DOOR TRIM

(a) Using a screwdriver, remove the 2 caps.

HINT:

Tape the screwdriver tip before use.

(b) Remove the 6 screws and clip.

(c) Pull the trim upward to remove it.

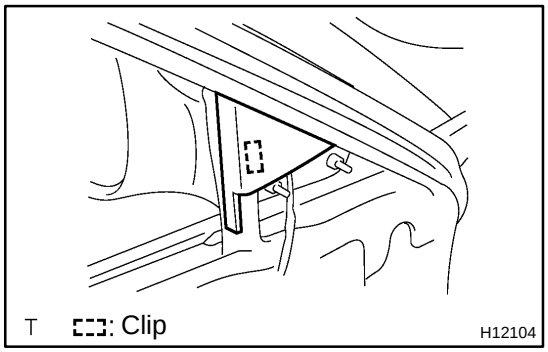

5. REMOVE LOWER FRAME BRACKET GARNISH

Using a screwdriver, remove the lower frame bracket as shown in the illustration.

HINT:

Tape the screwdriver tip before use.

6. REMOVE OUTSIDE REAR VIEW MIRROR

(a) Disconnect the connector.

(b) Remove the 3 nuts and outside rear view mirror.

Torque: 7.8 N·m (80 kgf·cm, 69 ft·lbf)

BO41G-01

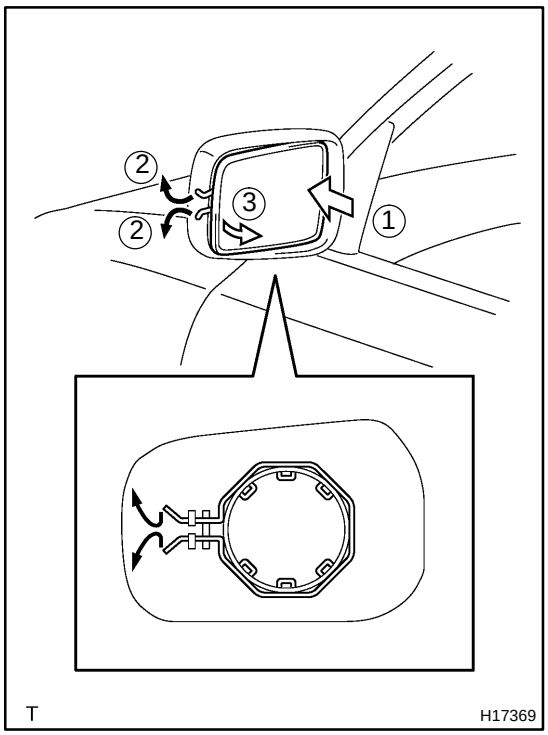

REPLACEMENT

1. Except TAIWAN:

IF NECESSARY, REMOVE MIRROR

(a) Press the inboard end of the mirror inward to access the back of the mirror.

(b) Reach fingers behind mirror and unlatch both ends of the wire retainer.

(c) Remove the mirror.

(d) w/ Heated mirrors:
Disconnect the heater wires.

NOTICE:

Be careful not to damage the wires on heated mirrors. Disconnect the wires from the back side of the heater.

2. Except TAIWAN:

INSTALL MIRROR

(a) w/ Heated mirrors:
Connect the heater wires.

(b) Completely install the wire retainer to the mirror.

(c) Carefully align the 2 alignment tabs to the slots on the motor.

(d) Press the mirror firmly into place to engage all 6 lugs of the wire retainer.

(e) Press on glass with open palm and rock the mirror through its full range of motion to engage all 6 lugs only low forces will be required.

NOTICE:

Confirm that all 6 wire retainer lugs are completely engaged to the mirror housing by gently pulling on the mirror edges.

(f) Confirm mirror operation through full range of motion.

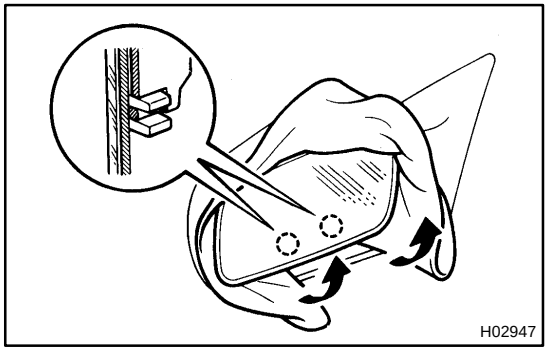

3. TAIWAN:

IF NECESSARY, REMOVE MIRROR

(a) Insert a shop rag between the mirror and the mirror body.

(b) Pull up the lower side of the shop rag to disconnect the mirror joint.

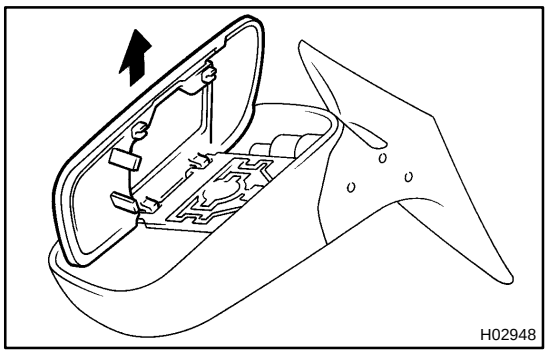

(c) Pull up the mirror and disconnect it.

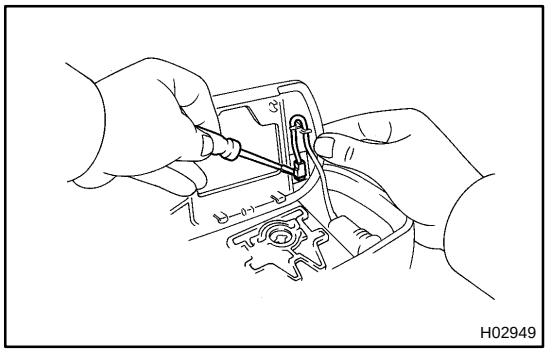

(d) w/ Heated mirrors:
Disconnect the connector.

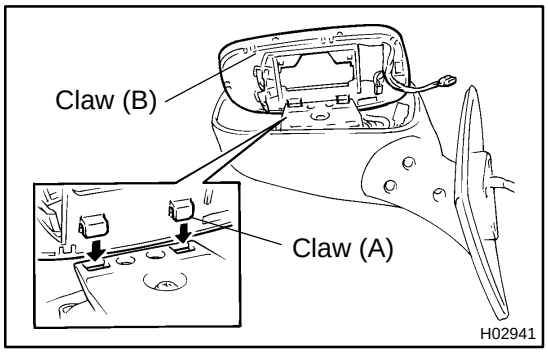

4. TAIWAN:
INSTALL MIRROR

(a) w/ Heated mirrors:
Connect the connector.

(b) Connect the claws (A) and set the mirror to the mirror body.

(c) Push the mirror to connect the claws (B) and set it.

QUARTER WINDOW GLASS

COMPONENTS

BO2PH-01

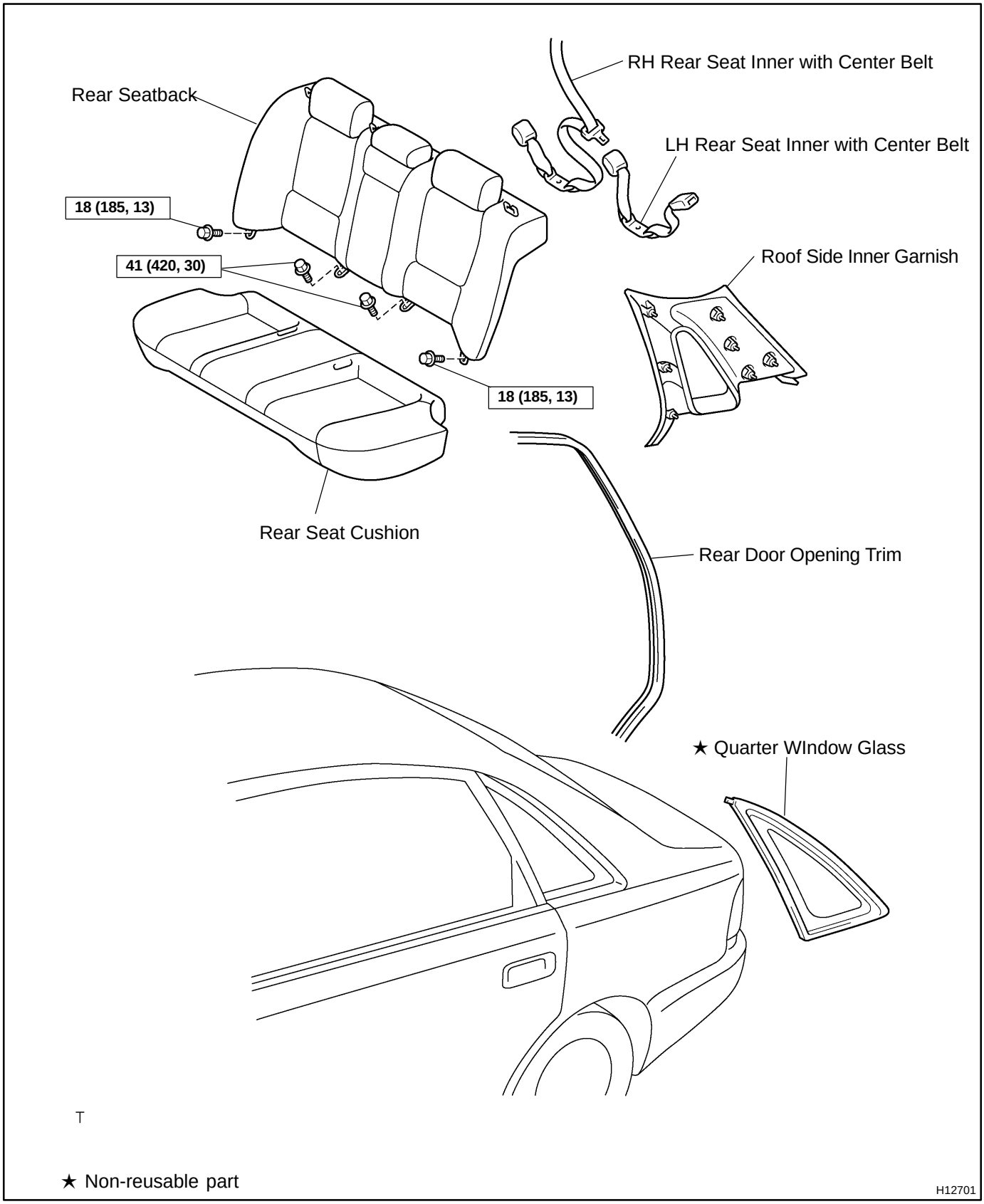

BO2PJ-01

INSTALLATION

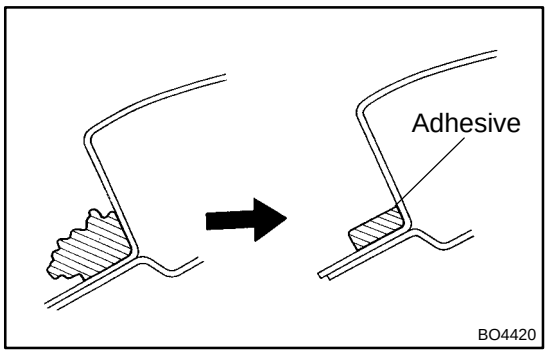

1. CLEAN AND SHAPE CONTACT SURFACE OF BODY

(a) Using a knife, cut away any rough areas on the body.

HINT:

Leave of the adhesive on the body as much as possible.

(b) Clean the cut surface of the adhesive with a shop rag saturated in cleaner.

HINT:

Even if all the adhesive has been removed, clean the body.

2. CLEAN REMOVED GLASS

(a) Using a scraper, remove the adhesive sticking to the glass.

(b) Clean the glass with cleaner.

NOTICE:

Do not touch the glass after cleaning it.

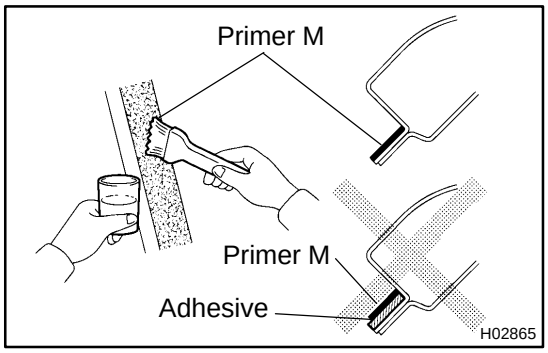

3. COAT CONTACT SURFACE OF BODY WITH PRIMER "M"

Using a brush, coat Primer M to the exposed part of body on the vehicle side.

NOTICE:

- ★ **Allow 3 minutes or more to dry the primer coated surface.**
- ★ **Do not coat Primer M to the adhesive.**
- ★ **Do not keep any of the opened Primer M for later use.**

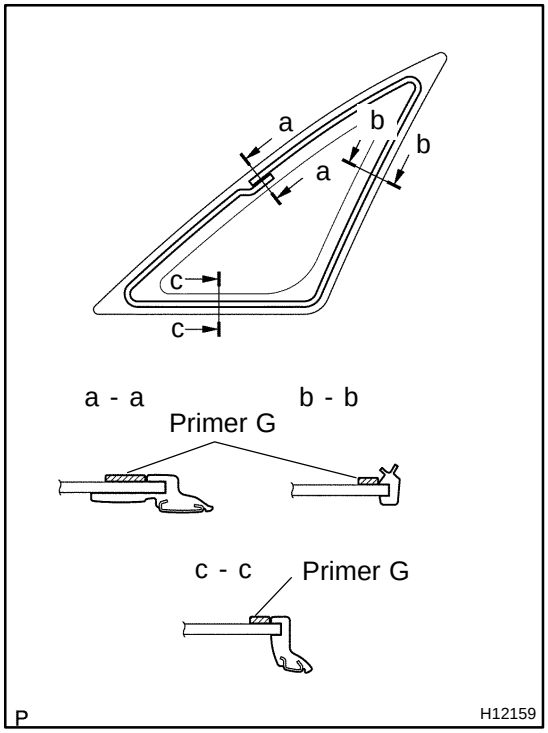

4. COAT CONTACT SURFACE OF GLASS WITH PRIMER "G"

(a) Using a brush or sponge, coat the edge of the glass and contact surface with Primer G.

(b) When the primer is applied by mistake to the area other than the specified, wipe it off with a clean shop rag before the primer dries.

NOTICE:

- ★ **Allow 3 minutes or more to dry the primer coated surface.**
- ★ **Do not keep any of the opened Primer G for later use.**

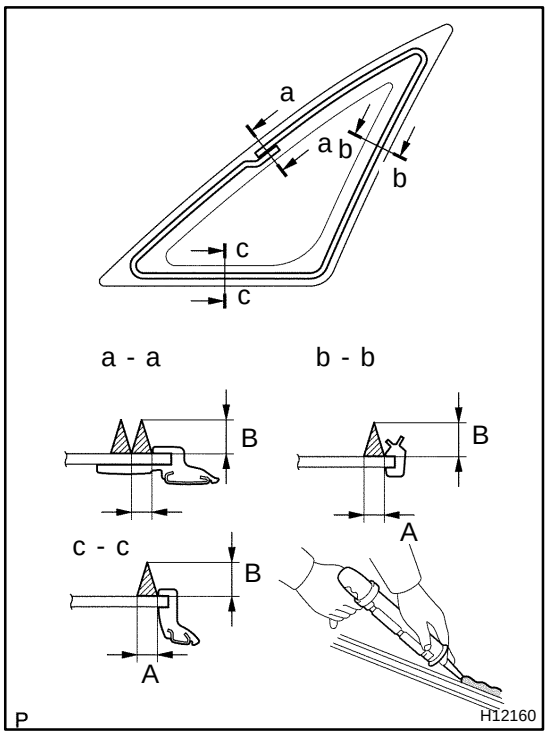

5. APPLY ADHESIVE

(a) Cut off the tip of the cartridge nozzle.

Part No. 08850-00801 or equivalent

HINT:

After cutting off the tip, use all adhesive within the time described in the table below.

Temperature	Tackfree time
35 ˚C (95 ˚F)	15 minutes
20 ˚C (68 ˚F)	100 minutes
5 ˚C (41 ˚F)	8 hours

(b) Load the cartridge into the sealer gun.

(c) Coat the glass with adhesive as shown in the illustration.

A: 8.0 mm (0.315 in.)

B: 13.5 mm (0.531 in.)

6. INSTALL QUARTER WINDOW GLASS

(a) Install the glass to the body.

(b) Hold the glass in place securely with a protective tape or equivalent until the adhesive hardens.

NOTICE:

Take care not to drive the vehicle during the time described in the table below.

Temperature	Minimum time prior to driving the vehicle
35 ˚C (95 ˚F)	1.5 hours
20 ˚C (68 ˚F)	5 hours
5 ˚C (41 ˚F)	24 hours

7. INSPECT FOR LEAKS AND REPAIR

NOTICE:

Conduct a leak test after hardening time has elapsed.

8. INSTALL ROOF SIDE INNER GARNISH

9. INSTALL REAR DOOR OPENING TRIM

10. INSTALL REAR SEAT (See page BO-123)

BO2PI-01

REMOVAL

1. REMOVE REAR SEAT (See page BO-120)

2. REMOVE REAR DOOR OPENING TRIM

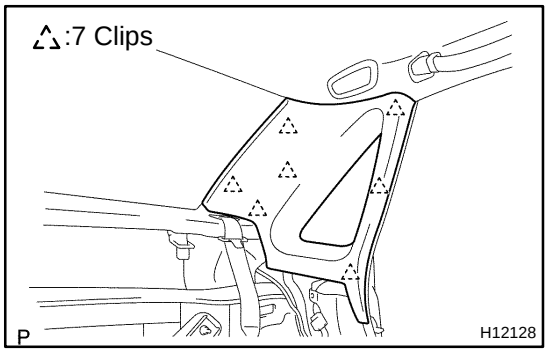

3. REMOVE ROOF SIDE INNER GARNISH

Using a screwdriver, remove the roof side inner garnish.

HINT:

Tape the screwdriver tip before use.

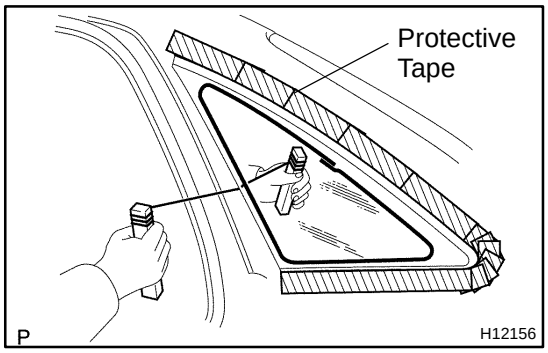

4. REMOVE QUARTER WINDOW GLASS

(a) Insert a piano wire between body and glass and let it pass through.

(b) Tie both wire ends to wooden blocks or similar objects.

HINT:

Apply protective tape to the outer surface to keep the surface from being scratched.

NOTICE:

When separating the glass, take care not to damage the paint and exterior.

(c) Cut the adhesive by pulling the piano wire around it.

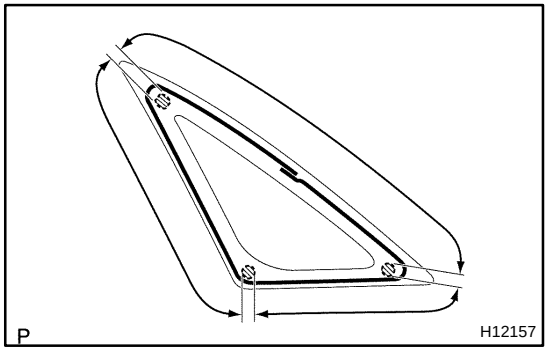

HINT:

Cut the adhesive areas as shown in the illustration, leaving the adhesive where the clips are.

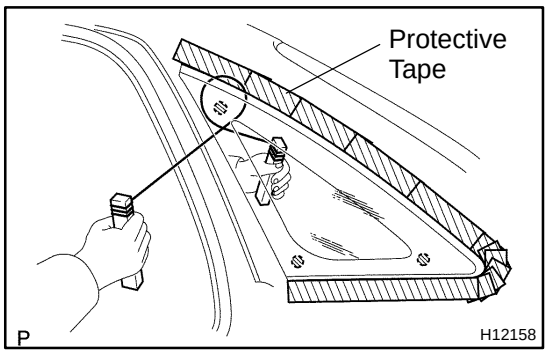

(d) Let the piano wire pass as shown in the illustration, cut off the left adhesive around the clips.

NOTICE:

- ★ **Do not damage the glass retainer.**
- ★ **When separating the glass, take care not to damage the paint and interior and exterior ornaments.**

(e) Remove the glass.

NOTICE:

Leave of the adhesive on the body as much as possible when cutting off the glass.

ROOF DRIP SIDE FINISH CENTER MOULDING

BO2PA-01

COMPONENTS

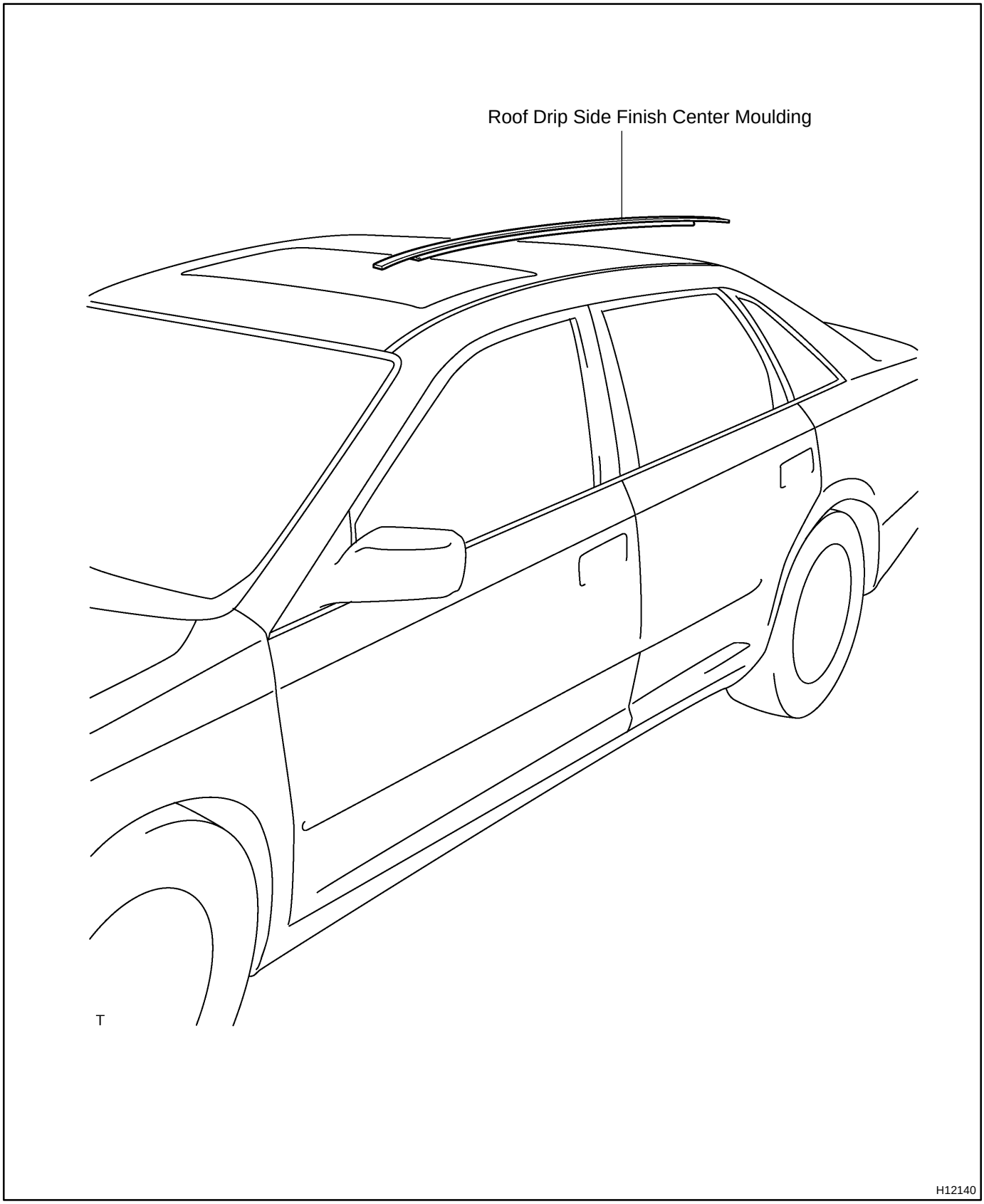

BO2PC-01

INSTALLATION

1. CLEAN CONTACT SURFACE OF BODY

(a) Using a heat light, heat the moulding surface to 40 - 60 ˚C (104 - 140 ˚F).

NOTICE:

Do not heat the body excessively.

(b) Using a knife, cut away any rough areas on the body.

NOTICE:

Be careful not to damage the body.

(c) Wipe off stains with cleaner.

2. If reusing the moulding:
CLEAN MOULDING

(a) Using a heat light, heat the moulding surface to 20 - 30 ˚C (68 - 86 ˚F).

NOTICE:

Do not heat the moulding excessively.

(b) Using a knife, cut the remaining adhesive from the moulding.

NOTICE:

Be careful not to damage the moulding.

(c) Wipe off stains with cleaner.

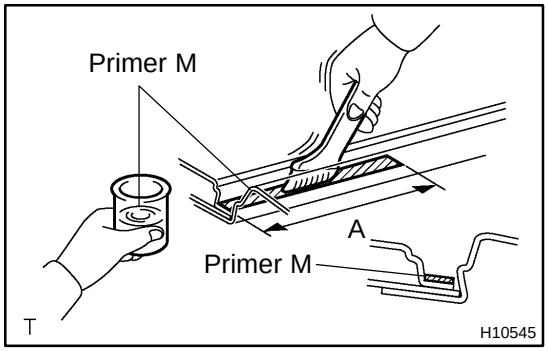

3. COAT CONTACT SURFACE OF BODY WITH PRIMER "M"

Using a brush, coat the contact surface on the body with Primer M as shown in the illustration.

Front and rear end:
A: 60 mm (2.36 in.)

NOTICE:

- ★ **Allow 3 minutes or more to dry the primer cared surface.**
- ★ **Do not coat the adhesive.**
- ★ **Do not keep any of the opened Primer M for later use.**

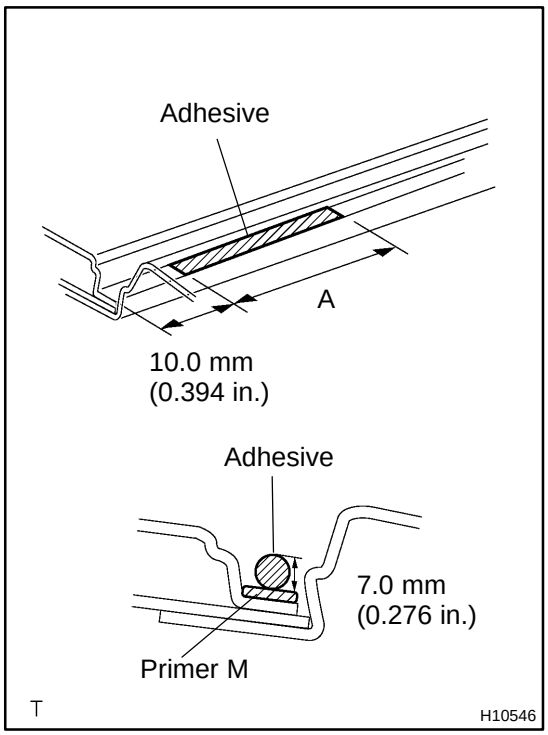

4. APPLY ADHESIVE

(a) Cut off the tip of the cartridge nozzle.

Part No. 08850-00801 or equivalent

HINT:

After cutting off the tip, use all adhesive within the time described in the table below.

Temperature	Tackfree time
35 ˚C (95 ˚F)	15 minutes
20 ˚C (68 ˚F)	100 minutes
5 ˚C (41 ˚F)	8 hours

(b) Load the cartridge into the sealer gun.

(c) Apply adhesive to the hatched area in the illustration for both front and rear of the vehicle.

Front end:

A: 35 mm (1.38 in.)

Rear end:

A: 35 mm (1.38 in.)

HINT:

When removing the moulding, apply adhesive well to the part where the body sealer is removed.

5. INSTALL MOULDING

Push the moulding to the body.

NOTICE:

- ★ **Make sure that the body and moulding are heated to a proper temperature.**
- ★ **Do not depress the adhesive coated parts excessively but just hold them down with your thumb.**
- ★ **Scrape off any overflowing adhesive with a plastic spatula and clean the surface with a dry rag.**
- ★ **Take care not to drive the vehicle during the time described in the table below.**

Temperature	Minimum time prior to driving the vehicle
35 ˚C (95 ˚F)	1.5 hours
20 ˚C (68 ˚F)	5 hours
5 ˚C (41 ˚F)	24 hours

BO2PB-01

REMOVAL

1. REMOVE ENDS OF MOULDING

(a) Apply protective tape to the outer surface as shown in the illustration to keep the surface from being scratched.

(b) Using a heat light heat the moulding to 20 - 30 °C (68 - 86 °F).

NOTICE:

Do not heat the moulding excessively.

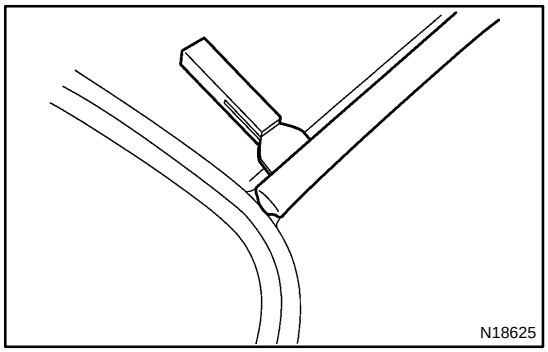

(c) Using a scraper, pull off the roof drip side finish moulding from the front end and rear end.

HINT:

Tape the scraper tip before use.

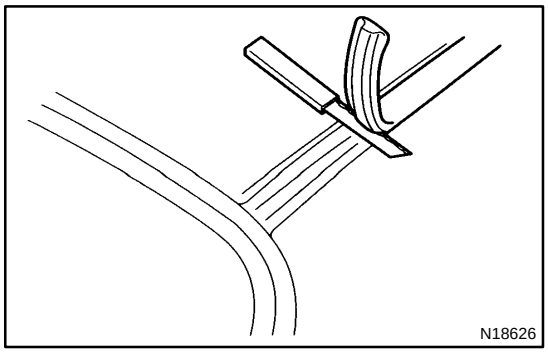

2. REMOVE MOULDING AND ADHESIVE

(a) Pull off the moulding by cutting the adhesive with a knife at the front and rear ends.

(b) Remove the moulding.

NOTICE:

Do not damage the body with the knife.

3. REMOVE ROOF DRIP SIDE FINISH MOULDING CLIP

ROOF DRIP SIDE FINISH MOULDING

BO2P7-01

COMPONENTS

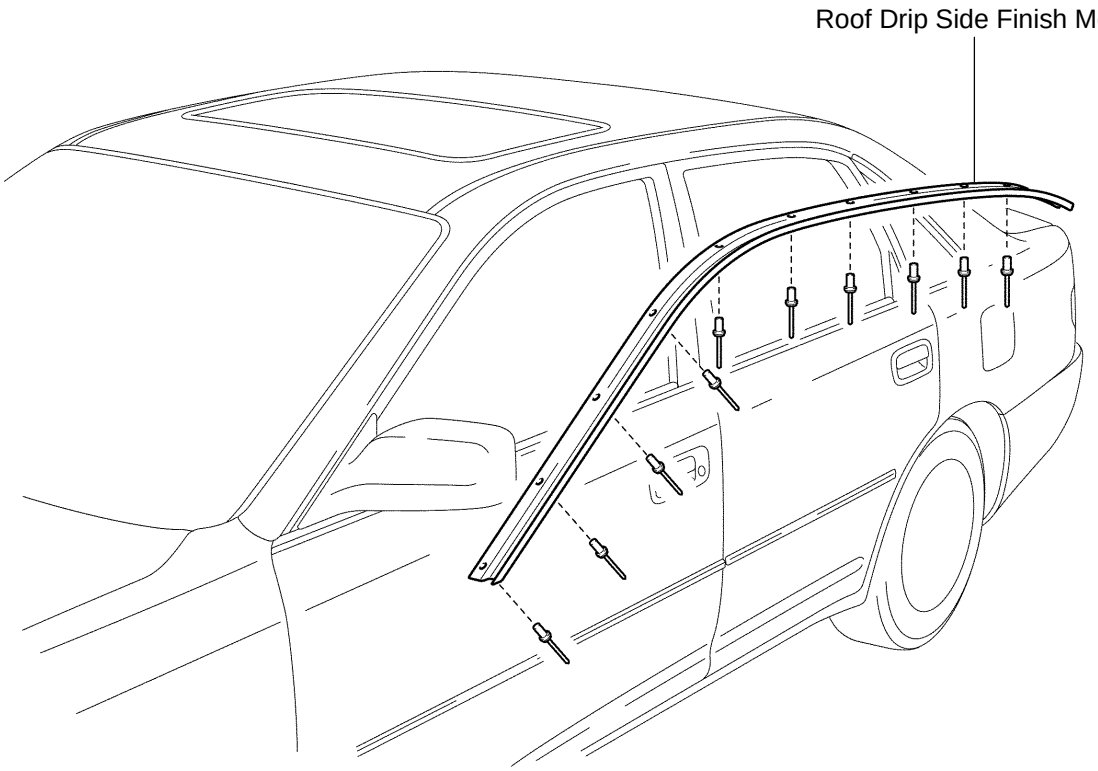

P

H12139

BO2P9-01

INSTALLATION

INSTALL ROOF DRIP SIDE FINISH MOULDING

Using a air riveter with nose piece No. 1 or hand riveter with nose piece No. 1, install the 10 rivets to the roof drip side finish moulding.

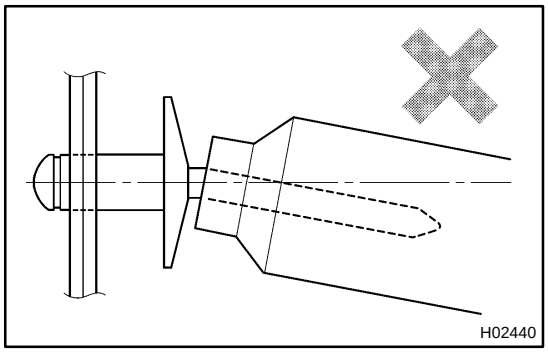

NOTICE:

★ **Do not prize a riveter, as riveter is damaged, it is not tightened and the mandrel is bent.**

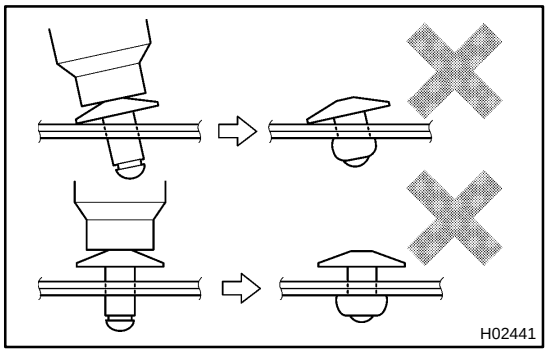

★ **Do not tilt the riveter and disconnect the rivet from the material while handling a riveter, as the materials are not tightened firmly.**

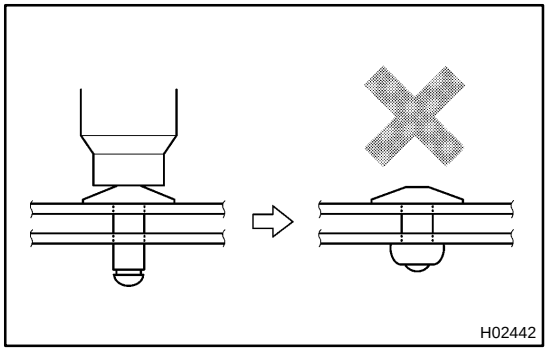

★ **Install the rivet while attaching materials, as they are not tightened firmly.**

BO2P8-01

REMOVAL

REMOVE ROOF DRIP SIDE FINISH MOULDING

(a) Using a drill of less than 3.0 mm (0.118 in.), drill out the 10 rivet heads.

HINT:

Gently and vertically put the drill to the rivet, and cut the rivet flanges.

CAUTION:

Take care as the cut rivet is hot.

NOTICE:

Prizing the hole with a drill can lead to damage to the rivet hole or breaking the drill.

(b) Remove the roof drip side finish moulding.

REAR BUMPER

COMPONENTS

BO0XK-03

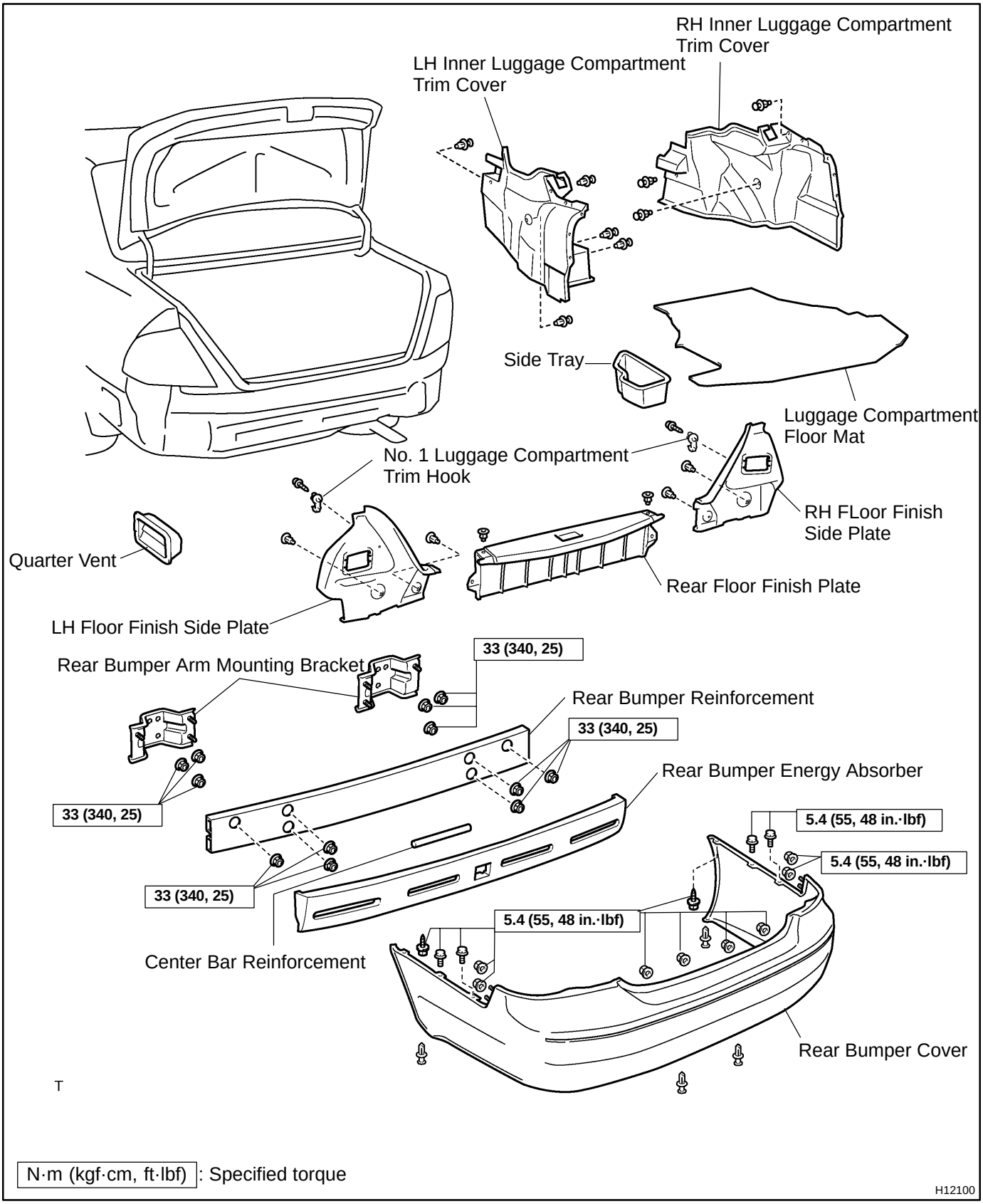

N·m (kgf·cm, ft·lbf) : Specified torque

H12100

BO2OU-01

ADJUSTMENT

1. ADJUST DOOR IN FORWARD/REARWARD AND VERTICAL DIRECTIONS

(a) Remove the front door scuff plate.
(b) Remove the center pillar lower garnish.
(c) Remove the front seat belt floor anchor.
(d) Remove the front seat belt retractor.
(See page BO-128)
(e) Remove the side airbag sensor assembly.
(See page RS-78)

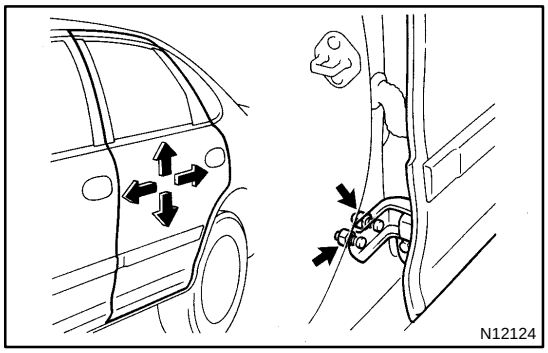

(f) Loosen the body side hinge nuts to adjust.
Torque: 25 N·m (260 kgf·cm, 19 ft·lbf)
(g) Reinstall the side airbag sensor assembly.
(See page RS-81)
Torque:
(h) Reinstall the front seat belt retractor.
(See page BO-137)
Torque:
Upper bolt: 7.5 N·m (76 kgf·cm, 66 in.·lbf)
Lower bolt: 41 N·m (420 kgf·cm, 30 ft·lbf)
(i) Reinstall the front seat belt floor anchor.
Torque: 41 N·m (420 kgf·cm, 30 ft·lbf)
(j) Reinstall the center pillar lower garnish and front door scuff plate.

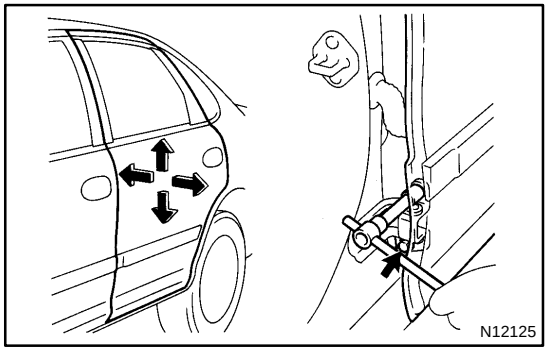

2. ADJUST DOOR IN LEFT/RIGHT AND VERTICAL DIRECTIONS

Loosen the door side hinge bolts to adjust.
Torque: 25 N·m (260 kgf·cm, 19 ft·lbf)

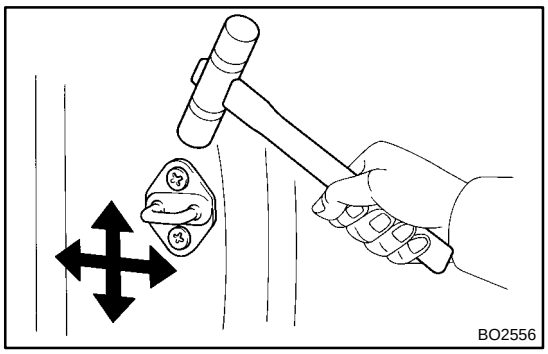

3. ADJUST DOOR LOCK STRIKER

(a) Check that the door fit and door lock linkages are adjusted correctly.

(b) Loosen the striker mounting screws to adjust.
Torque: 23 N·m (230 kgf·cm, 17 ft·lbf)

(c) Using a plastic hammer, tap the striker to adjust it.

REAR DOOR

COMPONENTS

BO2OS-01

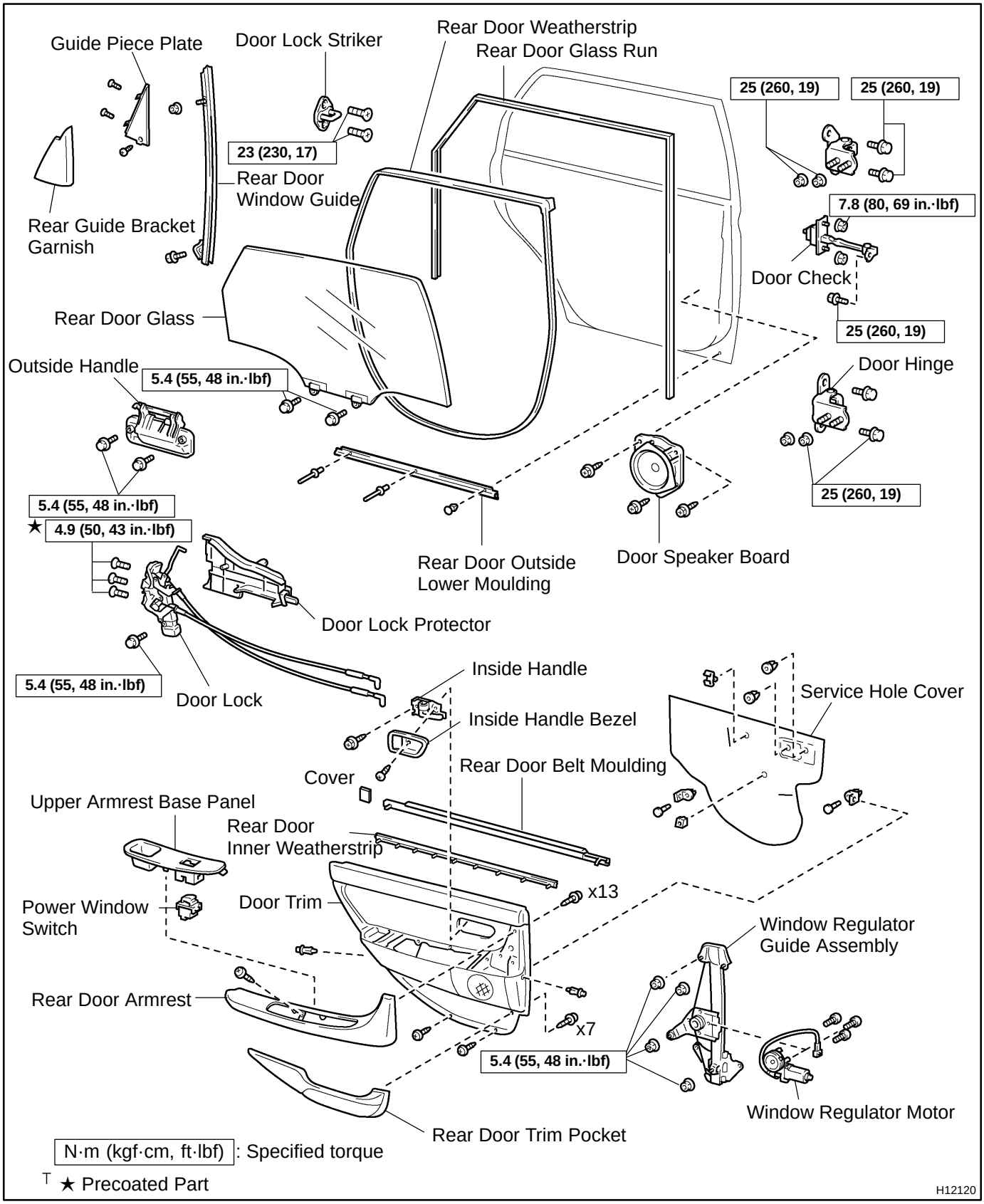

BO2OT-01

DISASSEMBLY

1. REMOVE INSIDE HANDLE BEZEL

(a) Using a screwdriver, remove the cover.

HINT:

Tape the screwdriver tip before use.

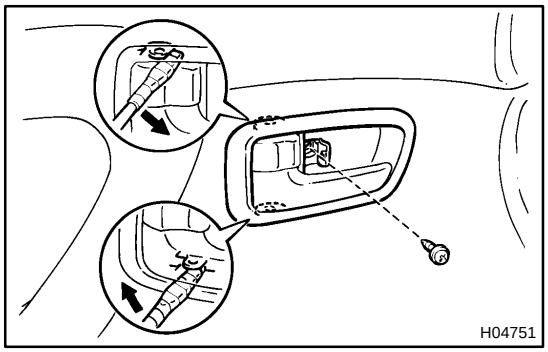

(b) Remove the screw.

(c) Using a screwdriver, remove the inside handle bezel as shown in the illustration.

HINT:

Tape the screwdriver tip before use.

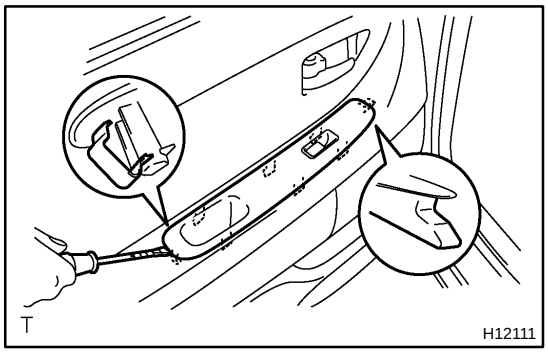

2. REMOVE UPPER ARMREST BASE PANEL WITH POWER WINDOW SWITCH

(a) Using a screwdriver, remove the upper armrest base panel with power window switch.

HINT:

Tape the screwdriver tip before use.

(b) Disconnect the connector.

(c) Remove the power window switch from the upper armrest base panel.

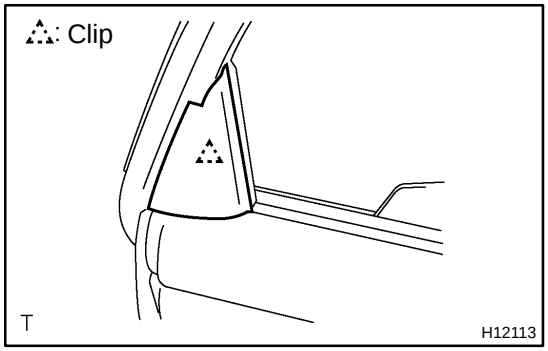

3. REMOVE REAR GUIDE BRACKET GARNISH

Using a screwdriver, remove the rear guide bracket garnish.

HINT:

Tape the screwdriver tip before use.

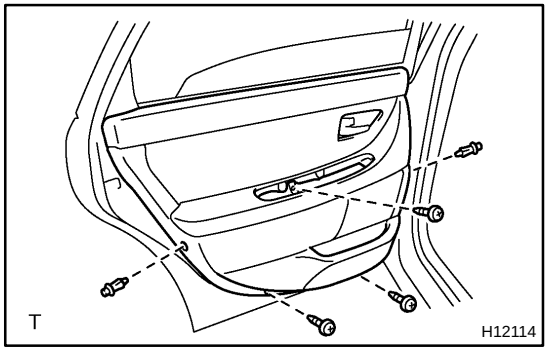

4. REMOVE DOOR TRIM

(a) Remove the 3 screws and 2 clips.

(b) Pull the trim upward to remove it.

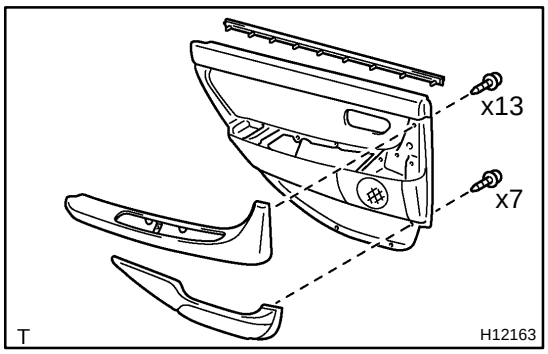

(c) Using a screwdriver, remove the rear door inner weatherstrip.
(d) Remove the 13 screws and rear door armrest.
(e) Remove the 7 screws and rear door trim pocket.

5. REMOVE INSIDE HANDLE

(a) Remove the screw.
(b) Slide the inside handle backward to remove it.

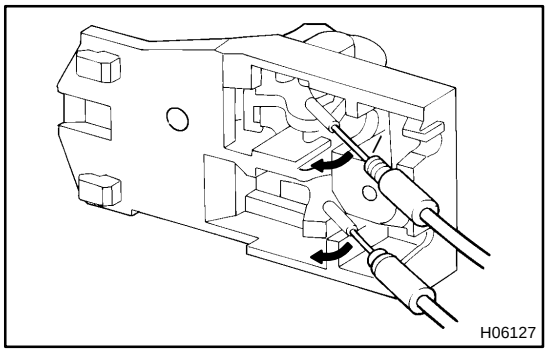

(c) Disconnect the 2 cables from the inside handle as shown in the illustration.

6. REMOVE DOOR SPEAKER BOARD

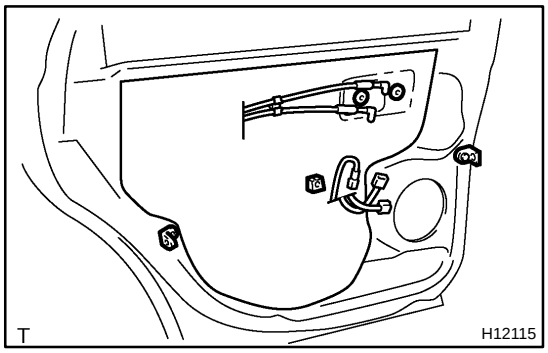

7. REMOVE SERVICE HOLE COVER

(a) Disconnect the 2 control cables from the link clamp.
(b) Using a clip remover, remove the grommets and link clamp.
(c) Remove the service hole cover.

NOTICE:

Do not tear the cover.

HINT:

At the time of reassembly, please refer to the following item.

Bring out the 2 control cables and wire harness through the service hole cover.

8. REMOVE REAR DOOR WEATHERSTRIP

(a) Remove the screw from the door check.
(b) Using a clip remover, remove the rear door weatherstrip.
(c) Reinstall the screw to the door check.
Torque: 25 N·m (260 kgf·cm, 19 ft·lbf)

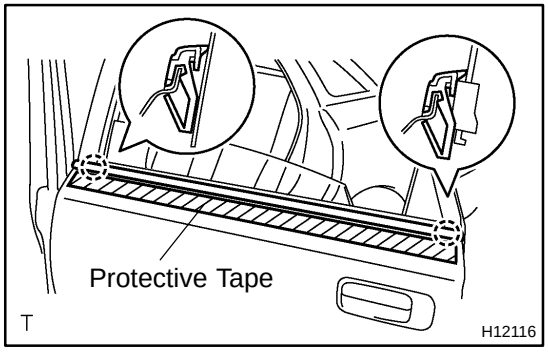

9. REMOVE REAR DOOR BELT MOULDING

(a) Apply protective tape to the outer surface as shown in the illustration, to keep the surface from being scratched.
(b) Using a moulding remover, remove the rear door belt moulding.

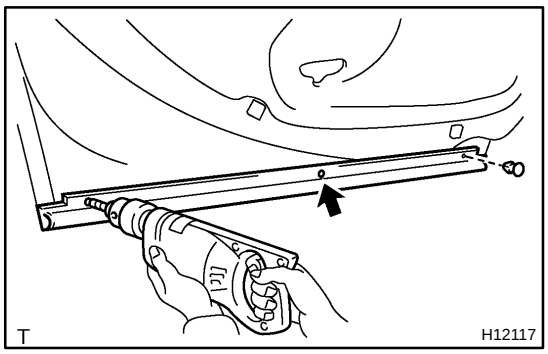

10. REMOVE REAR DOOR OUTSIDE LOWER MOULDING

(a) Using a drill of less than ø3.2 mm (0.126 in.), drill out the 2 rivet heads.

HINT:

Gently and vertically put the drill to the rivet, and cut the rivet flanges.

CAUTION:

Take care as the cut rivet is hot.

NOTICE:

Prizing the hole with a drill can lead to damage to the rivet hole or breaking the drill.

(b) Using a clip remover, remove the clip.

(c) Remove the rear door outside lower moulding.

(d) Using a vacuum cleaner, remove the drilled rivets and their dust from the inside of door panel.

HINT:

At the time of reassembly, please refer to the following item.

Using an air riveter with nose piece No. 1 or hand riveter with nose piece No. 1, install the 3 rivets to the front door outside lower moulding.

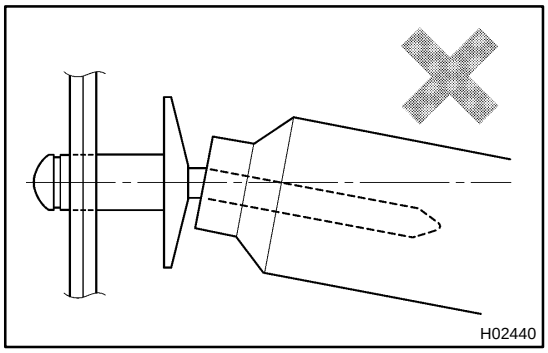

NOTICE:

★ **At the time of reassembly, please refer to the following items.**

★ **Do not prize a riveter, as riveter is damaged, it is not tightened and the mandrel is bent.**

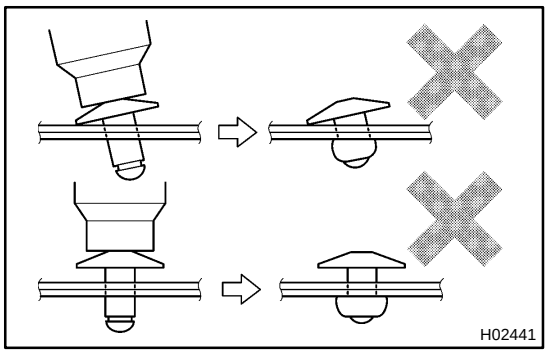

★ **Do not tilt the riveter and disconnect the rivet from the material while handling a riveter, as the materials are not tightened firmly.**

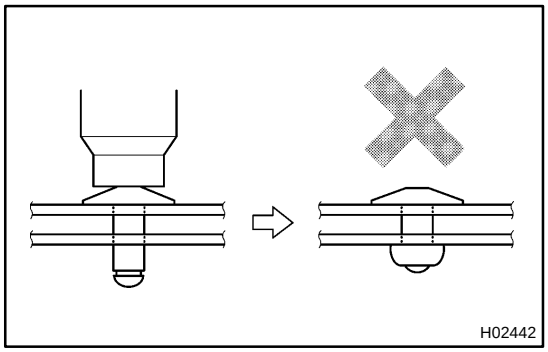

★ **Install the rivet while attaching materials, as they are not tightened firmly.**

11. REMOVE DOOR GLASS RUN

12. REMOVE REAR DOOR WINDOW GUIDE WITH GUIDE PIECE PLATE

(a) Remove the bolt, nut, 3 screws and rear door window guide with guide piece plate.

(b) Remove the guide piece plate from the rear door window guide.

13. REMOVE REAR DOOR GLASS

(a) Open the door glass until the bolts appear in the service hole.

(b) Remove the 2 bolts.

Torque: 5.4 N·m (55 kgf·cm, 48 in.·lbf)

NOTICE:

Be careful not to drop the door glass.

(c) Pull the door glass upward to remove it.

14. REMOVE WINDOW REGULATOR ASSEMBLY

(a) Disconnect the connector, then remove the 4 nuts and window regulator assembly.

Torque: 5.4 N·m (55 kgf·cm, 48 in.·lbf)

HINT:

Remove the window regulator assembly through the service hole.

(b) Using a torx driver, remove the 3 torx screws and window regulator motor from the window regulator guide assembly.

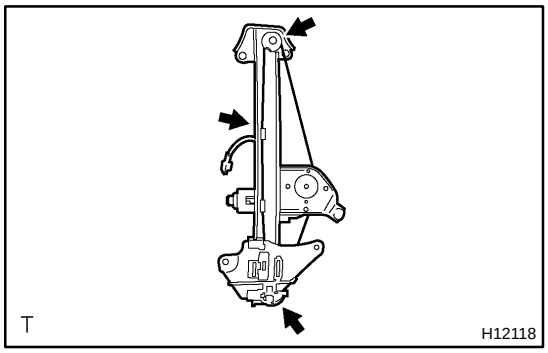

HINT:

★ At the time of reassembly, please refer to the following items.

★ Apply MP grease to the glass guide and rollers of window regulator assembly.

★ After installing the window regulator assembly, window regulator assembly need to be re-initialized.
Refer to BE-80 .

15. REMOVE DOOR LOCK

(a) Disconnect the control link from the outside handle.

(b) Disconnect the connector.

(c) Remove the 3 torx screws and door lock.

Torque:

Bolt: 5.4 N·m (55 kgf·cm, 48 in.·lbf)

Screw: 4.9 N·m (50 kgf·cm, 43 in.·lbf)

HINT:

Remove the door lock through the service hole.

HINT:

At the time of reassembly, please refer to the following item.

Apply adhesive to 3 screws.

Part No. 08833-00070, THREE BOND 1324 or equivalent

(d) Remove the 2 screws and door lock protector from the door lock.

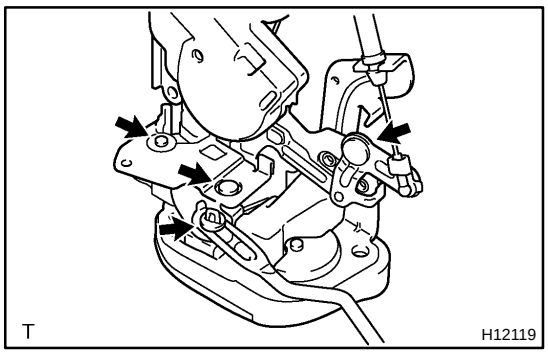

HINT:
At the time of reassembly, please refer to the following item.
Apply MP grease to the sliding and rotating parts of the door lock.

16. REMOVE OUTSIDE HANDLE

Remove the 2 bolts and outside handle.

Torque: 5.4 N·m (55 kgf·cm, 48 in.·lbf)

BO2OV-01

REASSEMBLY

Reassembly is in the reverse order of disassembly (See page BO-17).

REAR SEAT

COMPONENTS

BO2QD-01

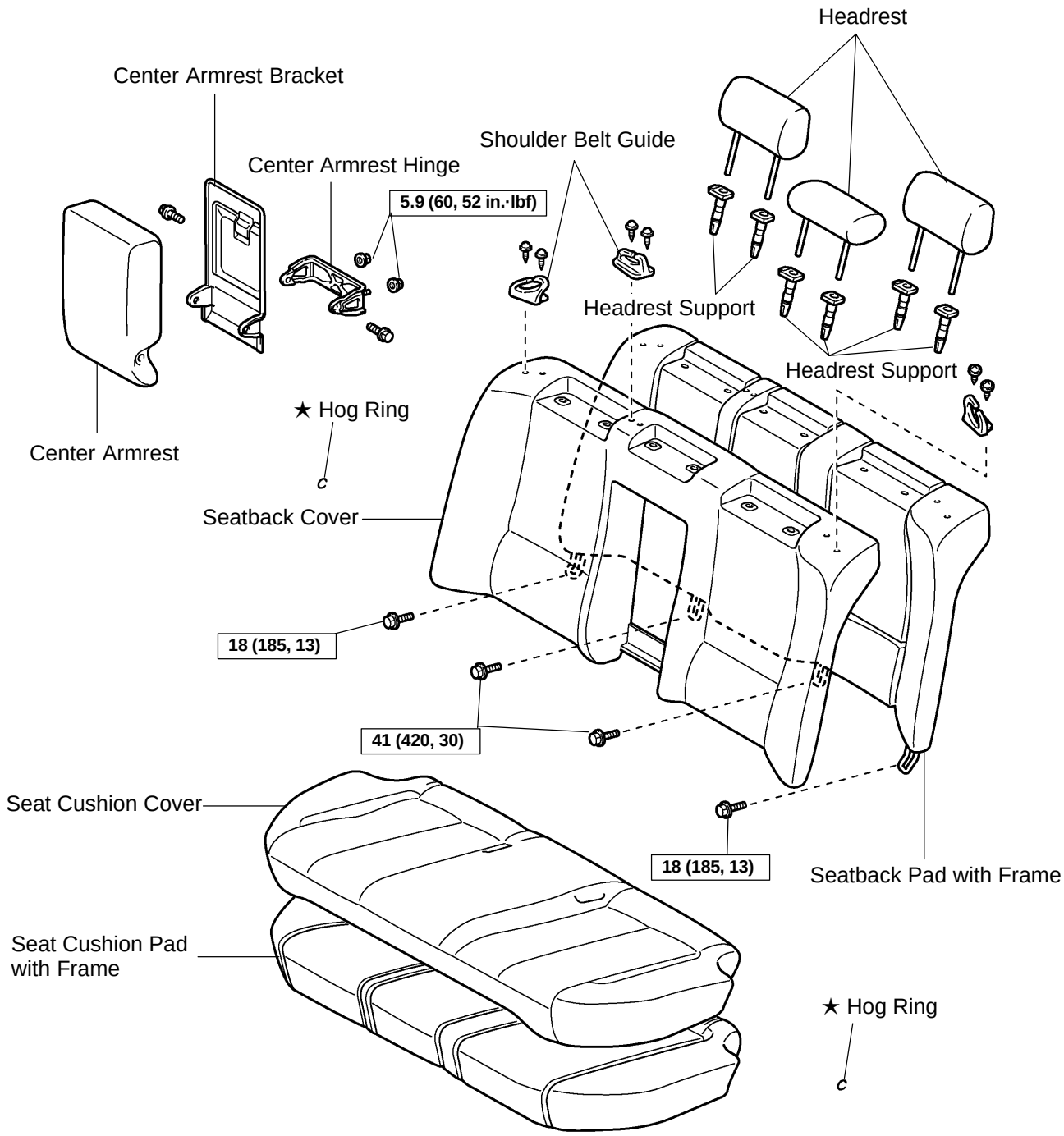

T N·m (kgf·cm, ft·lbf) : Specified torque
★ Non-reusable part

H12219

BO2QF-01

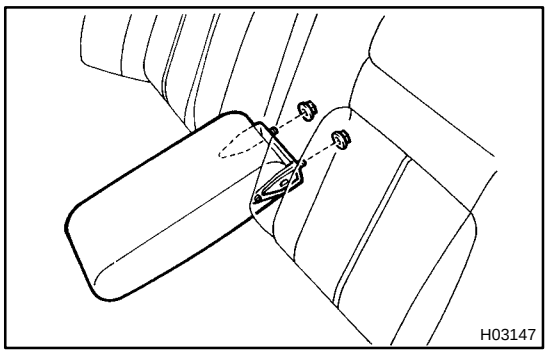

DISASSEMBLY

1. REMOVE HEADRESTS

2. REMOVE CENTER ARMREST

Remove the 2 nuts and center armrest.

Torque: 5.9 N·m (60 kgf·cm, 52 in.·lbf)

3. REMOVE SHOULDER BELT GUIDES

Remove the 4 screws and 2 shoulder belt guides.

4. REMOVE HEADREST SUPPORTS

5. REMOVE SEATBACK COVER

Remove the hog rings and seatback cover from the seatback pad with frame.

6. REMOVE SEAT CUSHION COVER

Remove the hog rings and seat cushion cover from the seat cushion pad.

BO2QH-01

INSTALLATION

Installation is in the reverse order of removal (See page BO-123).

BO2QG-01

REASSEMBLY

Reassembly is in the reverse order of disassembly (See page BO-121).

BO2QE-01

REMOVAL

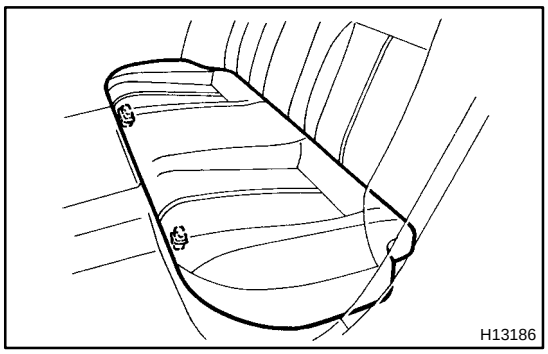

1. REMOVE REAR SEAT CUSHION ASSEMBLY

Remove the rear seat cushion.

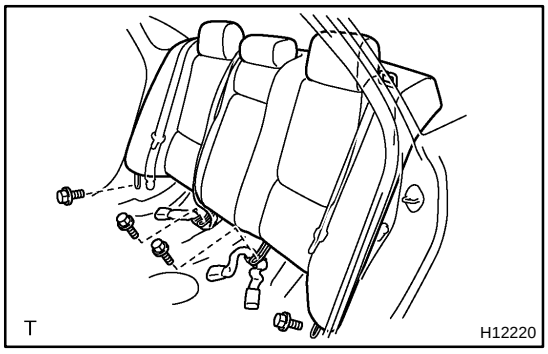

2. REMOVE REAR SEATBACK ASSEMBLY

(a) Remove the 4 bolts.

Torque:

Center: 41 N·m (420 kgf·cm, 30 ft·lbf)

LH, RH Side: 18 N·m (185 kgf·cm, 13 ft·lbf)

(b) Raise the seatback assembly upward to remove the seatback assembly.

ROOF HEADLINING

BO2PZ-01

COMPONENTS

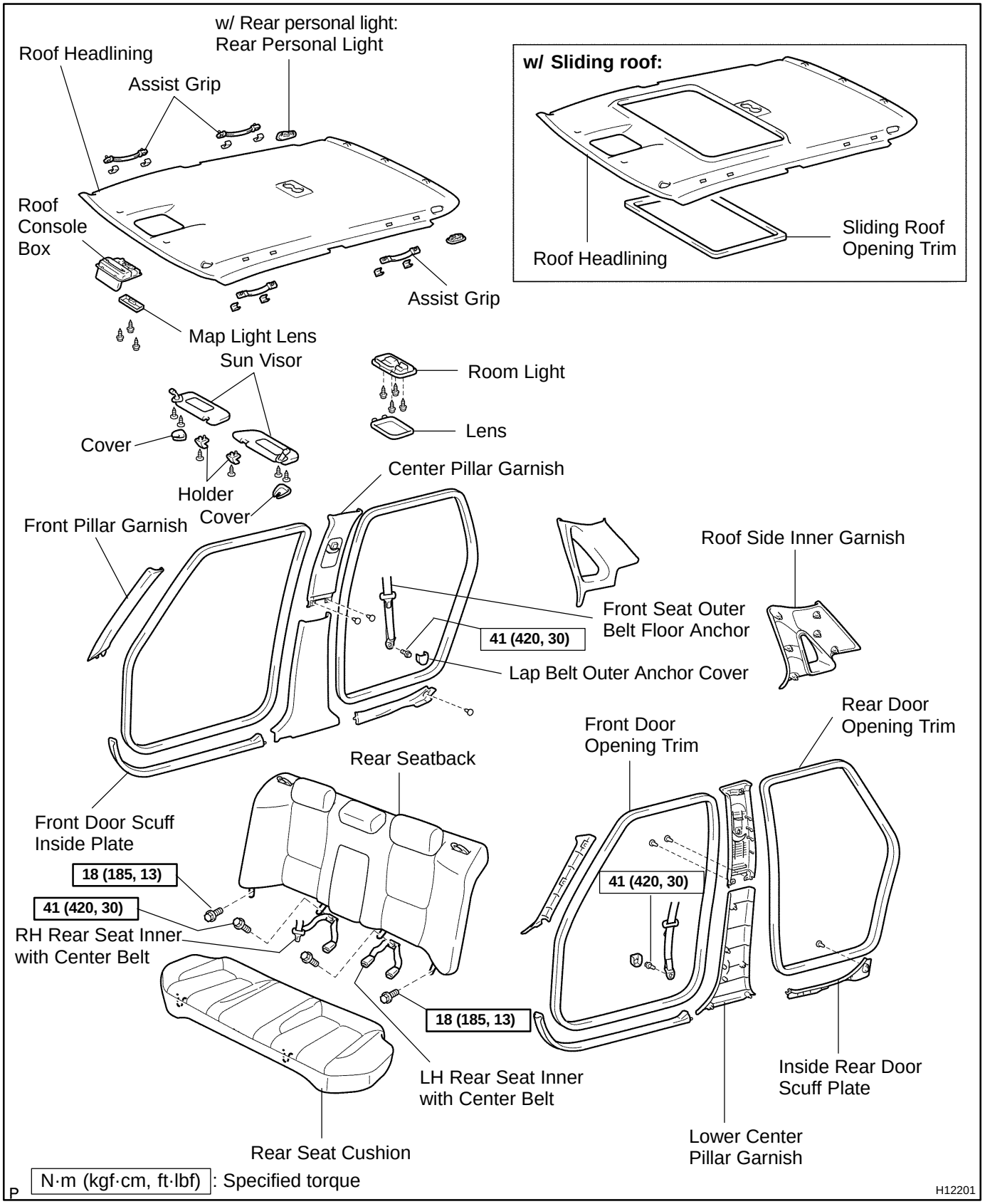

BO2Q1-01

INSTALLATION

Installation is in the reverse order of removal (See page BO-99).

BO2Q0-01

REMOVAL

1. REMOVE REAR SEAT (See page BO-120)

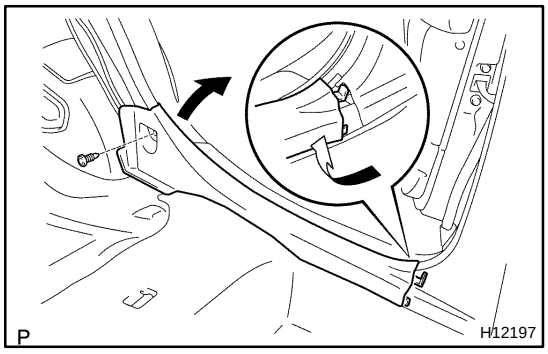

2. REMOVE INSIDE REAR DOOR SCUFF PLATE

(a) Remove the clip.

(b) Remove the inside rear door scuff plate as shown in the illustration.

(c) Employ the same manner described above to the other side.

3. REMOVE REAR DOOR OPENING TRIMS

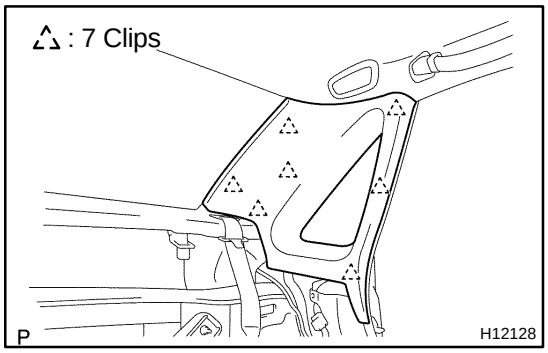

4. REMOVE ROOF SIDE INNER GARNISH

(a) Using a screwdriver, remove the roof side inner garnish.

HINT:

Tape the screwdriver tip before use.

(b) Employ the same manner described above to the other side.

5. REMOVE ASSIST GRIPS

(a) Using a screwdriver, remove the cover.

HINT:

Tape the screwdriver tip before use.

(b) Loosen bolts until assist grip detaches from the vehicle.

(c) Repeat at 4 positions.

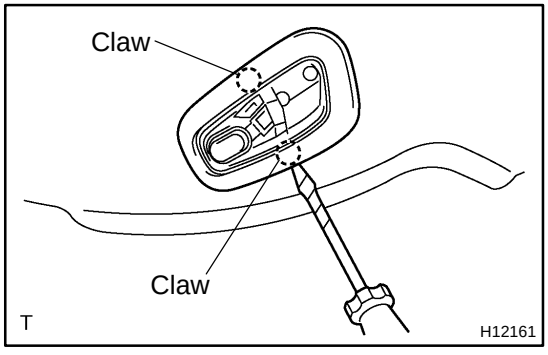

6. w/ Rear personal light:
REMOVE REAR PERSONAL LIGHT

(a) Using a screwdriver, remove the rear personal light, then disconnect the connector.

HINT:

Tape the screwdriver tip before use.

(b) Employ the same manner described above to the other side.

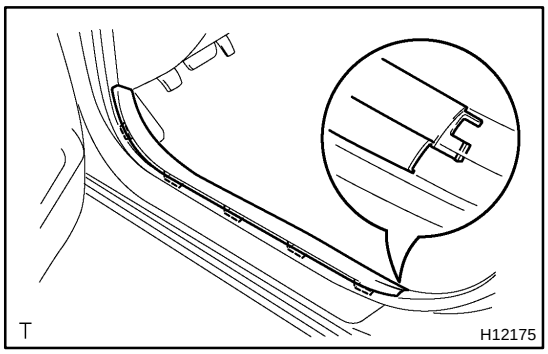

7. REMOVE FRONT DOOR SCUFF INSIDE PLATE

(a) Remove the front door scuff inside plate.

(b) Employ the same manner described above to the other side.

8. REMOVE FRONT DOOR OPENING TRIMS

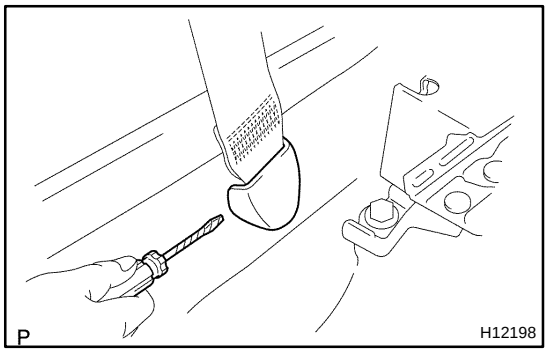

9. REMOVE LOWER CENTER PILLAR GARNISH

(a) Using a screwdriver, remove the lap belt outer anchor cover.

(b) Remove the front seat outer belt floor anchor.

Torque: 41 N·m (420 kgf·cm, 30 ft·lbf)

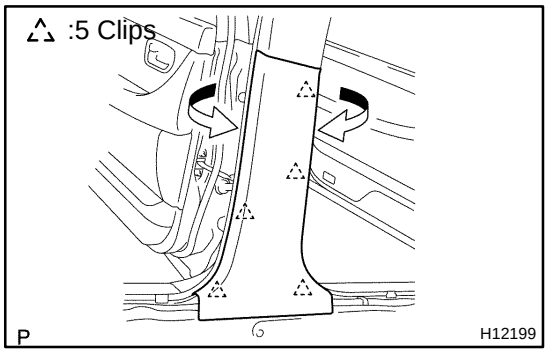

(c) Remove the lower center pillar garnish as shown in the illustration.

(d) Employ the same manner described above to the other side.

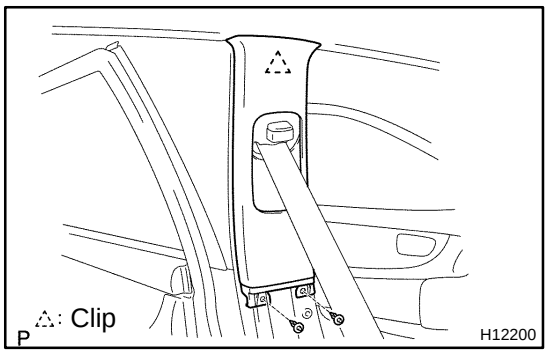

10. REMOVE CENTER PILLAR GARNISH

(a) Remove the 2 clips.

(b) Using a screwdriver, remove the center pillar garnish.

HINT:

Tape the screwdriver tip before use.

(c) Employ the same manner described above to the other side.

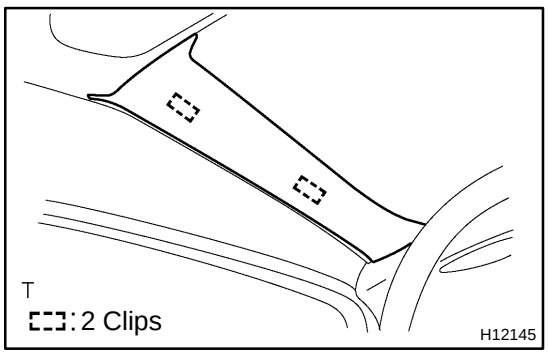

11. REMOVE FRONT PILLAR GARNISH

(a) Remove the front pillar garnish.

(b) Employ the same manner described above to the other side.

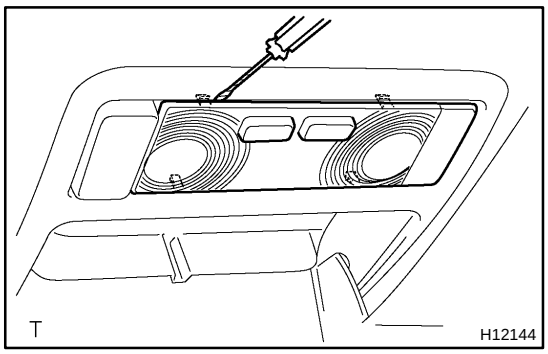

12. REMOVE ROOF CONSOLE BOX

(a) Using a screwdriver, remove the map light lens.

HINT:

Tape the screwdriver tip before use.

(b) Remove the 3 screws and roof console box, then disconnect the connector.

13. REMOVE ROOM LIGHT

(a) Using a screwdriver, remove the room light lens.

HINT:

Tape the screwdriver tip before use.

(b) Remove the 4 screws and room light, then disconnect the connector.

14. w/ Sliding roof:
REMOVE SLIDING OPENING TRIM

15. REMOVE SUN VISORS AND HOLDERS

(a) Using a screwdriver, pry the bracket cover off from the rear.

(b) Remove the 2 screws from the visor bracket and a screw from the holder.

(c) Remove the visor assembly from the holder and disconnect the connector.

(d) Pull off the holder.

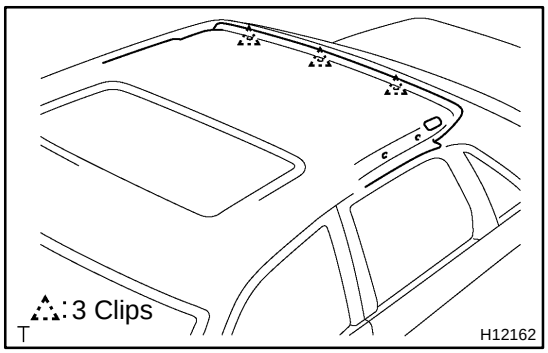

16. REMOVE ROOF HEADLINING

Disengage the 3 clips and remove the roof headlining.

ROCKER PANEL MOULDING

COMPONENTS

BO2PD-01

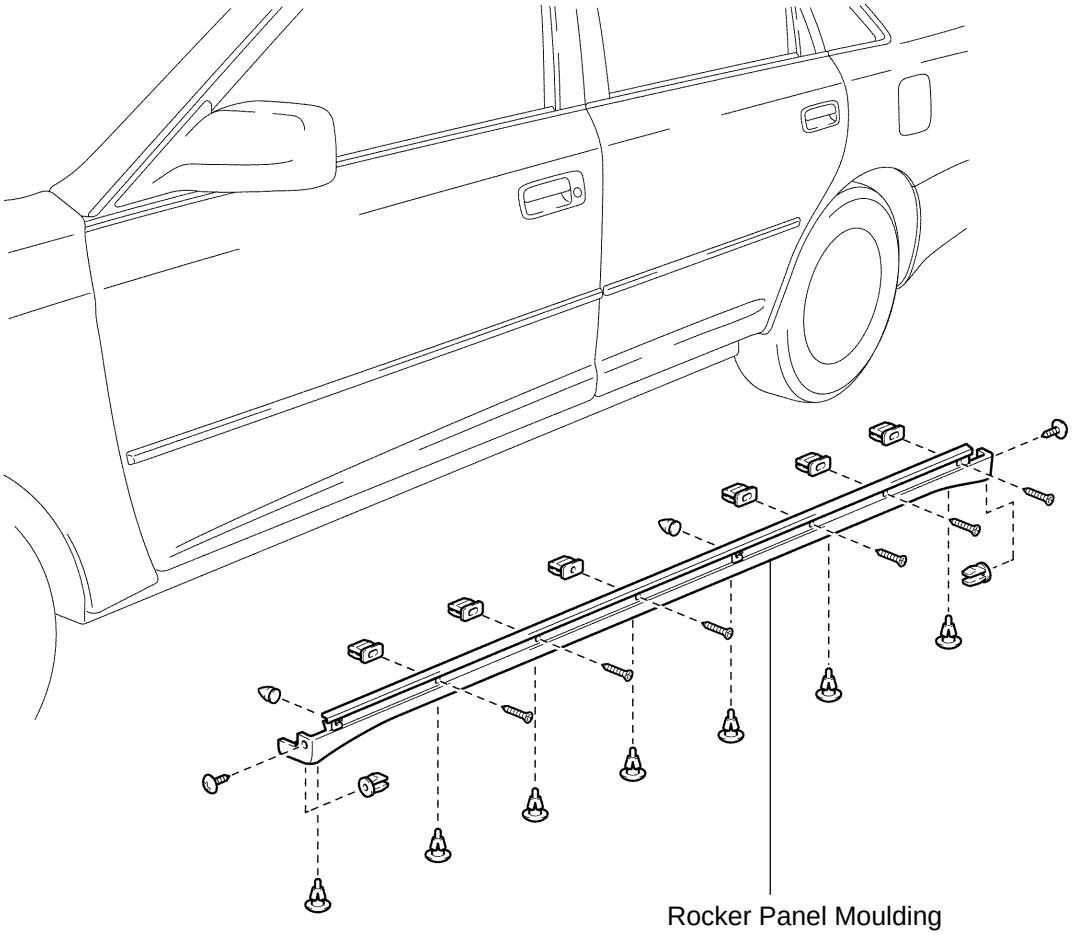

P

H12142

BO2QM-01

DISPOSAL

HINT:

When scrapping vehicles equipped with a seat belt pretensioner or disposing of a front seat outer belt (with seat belt pretensioner) always first activate the seat belt pretensioner in accordance with the procedure described below. If any abnormality occurs in the seat belt pretensioner operation, contact the SERVICE DEPT. of TOYOTA MOTOR SALES, U.S.A., INC. When disposing of a front seat outer belt (with seat belt pretensioner) activated in a collision, follow the same procedure given in step 1-(e) in "DISPOSAL".

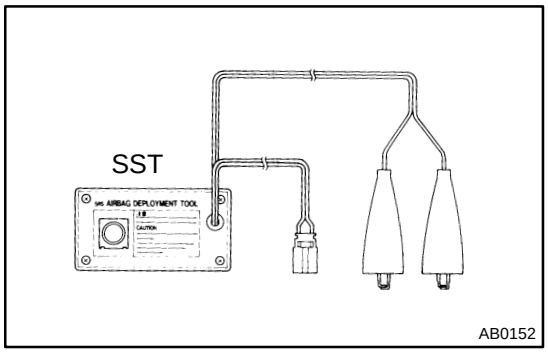

CAUTION:

- ★ **Never dispose of the front seat outer belt which has an inactivated pretensioner.**
- ★ **The seat belt pretensioner produces a sizeable exploding sound when it activates, so perform the operation out-of-door and where it will not create a nuisance to nearby residents.**
- ★ **When activating the seat belt pretensioner, always use the specified SST. (SRS Airbag Deployment Tool) Perform the operation in a place away from electrical noise.**

  SST 09082-00700, 09082-00740
- ★ **When activating a front seat outer belt (with seat belt pretensioner), perform the operation at least 10 m (33 ft) away from the front seat outer belt.**
- ★ **Use gloves and safety glasses when handling a front seat outer belt with activated pretensioner.**
- ★ **Always wash your hands with water after completing the operation.**
- ★ **Do not apply water, etc. to a front seat outer belt with the activated pretensioner.**

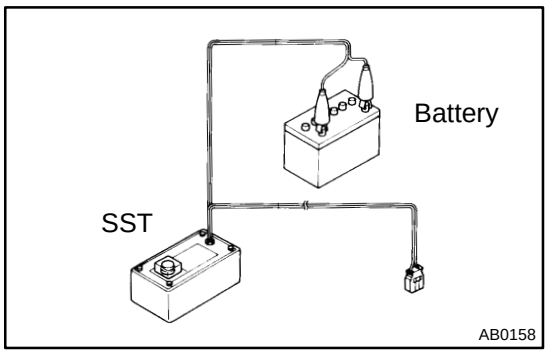

1. SEAT BELT PRETENSIONER ACTIVATION WHEN SCRAPPING VEHICLE

HINT:
Have a battery ready as the power source to activate the seat belt pretensioner.

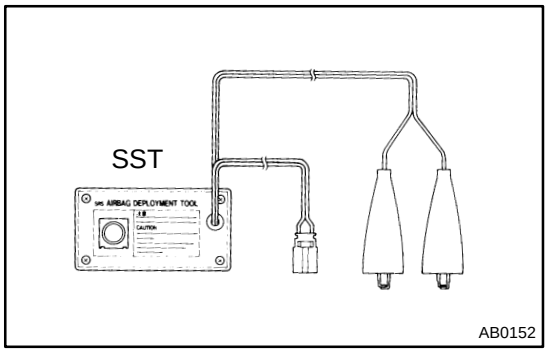

(a) Check the functioning of SST.

CAUTION:
When activating the seat belt pretensioner, always use the specified SST: SRS Airbag Deployment Tool.

SST 09082-00700, 09082-00740

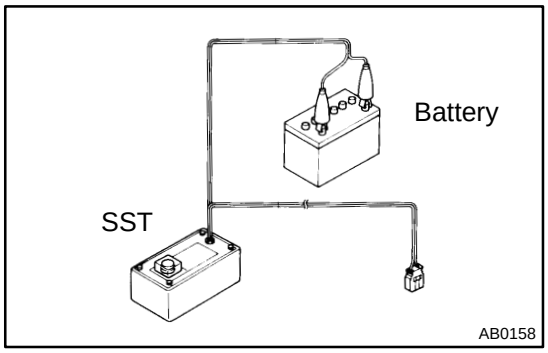

(1) Connect the SST to the battery.
Connect the red clip of the SST to the battery positive (+) terminal and the black clip to the battery negative (-) terminal.

HINT:
Do not connect the yellow connector which will be connected with the seat belt pretensioner.

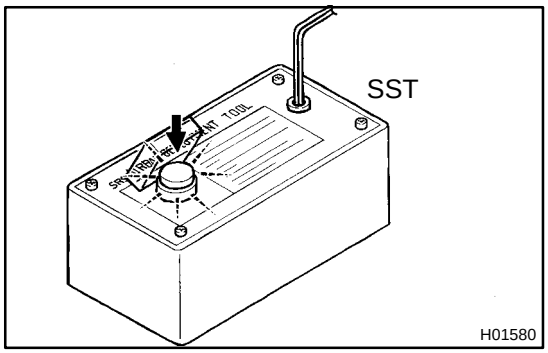

(2) Press the SST activation switch, and check the LED of the SST activation switch lights up.

CAUTION:
If the LED lights up when the activation switch is not being pressed, SST malfunction is probable, so definitely do not use the SST.

(b) Disconnect the pretensioner connector.
(1) Remove the front door scuff inside plate.
(2) Remove lower center pillar garnish.

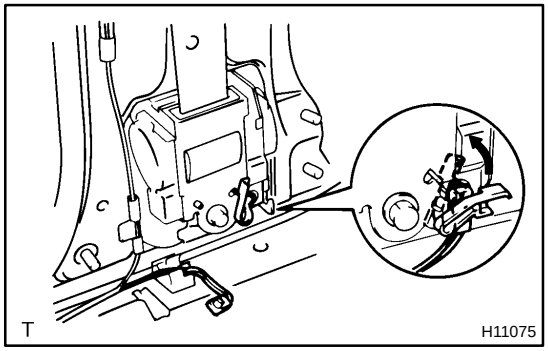

(3) Disconnect the pretensioner connector as shown in the illustration.

(c) Install the SST.
(1) Buckle the front seat belt and check that there is no looseness and slack in the front seat inner belt and front seat outer belt.

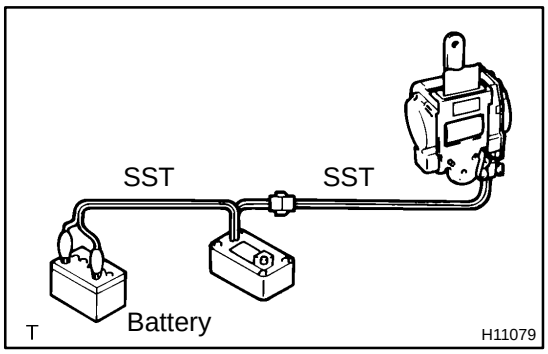

(2) Connect the 2 SST, then connect them to the seat belt pretensioner.

SST 09082-00700, 09082-00740

NOTICE:

To avoid damaging the SST connector and wire harness, do not lock the secondary lock of the twin lock.

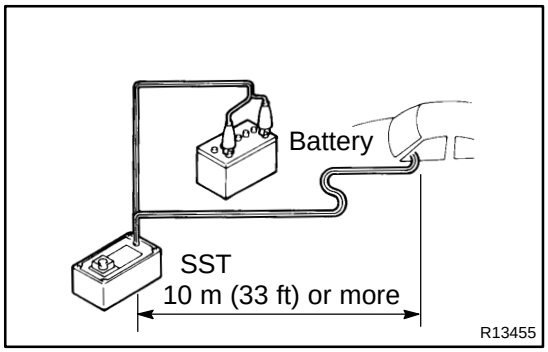

(3) Move the SST to at least 10 m (33 ft) away from the front of the vehicle.

(4) Close all the doors and windows of the vehicle.

NOTICE:

Take care not to damage the SST wire harness.

(5) Connect the SST red clip to the battery positive (+) terminal and the black clip to the negative (-) terminal.

(d) Activate the seat belt pretensioner.

(1) Confirm that no one is inside the vehicle or within 10 m (33 ft) area around the vehicle.

(2) Press the SST activation switch and activate the seat belt pretensioner.

HINT:

The seat belt pretensioner operates simultaneously as the LED of the SST activation switch lights up.

(e) Dispose of the front seat outer belt (with seat belt pretensioner).

CAUTION:

- ★ **The front seat outer belt is very hot when the seat belt pretensioner is activated, so leave it alone for at least 30 minutes after activation.**
- ★ **Use gloves and safety glasses when handling a front seat outer belt with the activated seat belt pretensioner.**
- ★ **Always wash your hands with water after completing the operation.**
- ★ **Do not apply water, etc. to a front seat outer belt with the activated seat belt pretensioner.**

HINT:

When scrapping a vehicle, activate the seat belt pretensioner and scrap the vehicle with the activated front seat outer belt still installed.

2. ACTIVATION WHEN DISPOSING OF FRONT SEAT OUTER BELT ONLY

NOTICE:

- ★ **When disposing of the front seat outer belt (with seat belt pretensioner) only, never use the customer's vehicle to activate the seat belt pretensioner.**

★ **Be sure to follow the procedure given on the next page when activating the seat belt pretensioner.**

HINT:

Have a battery ready as the power source when activating the seat belt pretensioner.

(a) Remove the front seat outer belt (See page BO-128).

HINT:

Cut the belt near the seat belt retractor.

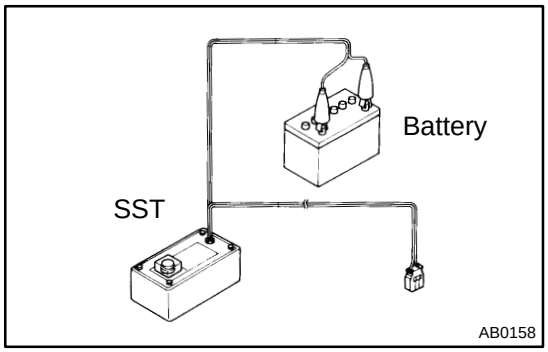

(b) Check the functioning of SST (See step 1-(a)).
SST 09082-00700, 09082-00740

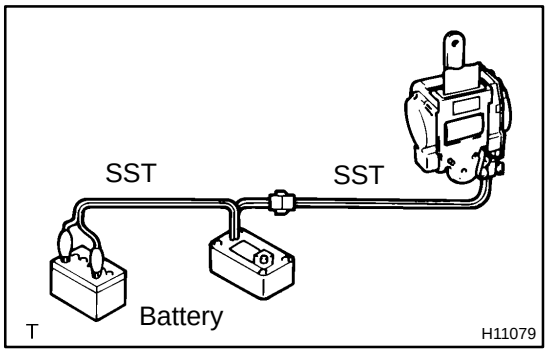

(c) Install the SST.

(1) Connect the 2 SST, then connect them to the seat belt pretensioner.
SST 09082-00700, 09082-00740

NOTICE:

To avoid damaging the SST connector and wire harness, do not lock the secondary lock of the twin lock.

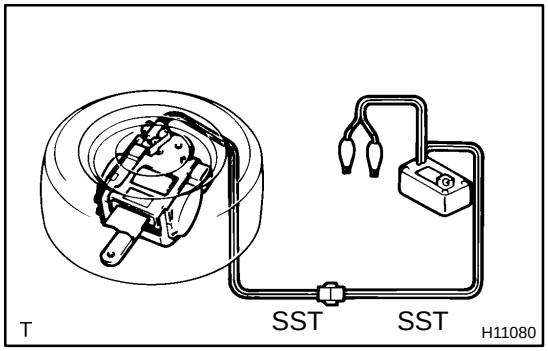

(2) Place the front seat outer belt on the ground and cover it with the disc wheel with tire.

NOTICE:

Place the front seat outer belt as shown in the illustration.

(3) Move the SST at least 10 m (33 ft) away from the disc wheel.

NOTICE:

Take care not to damage the SST wire harness.

(d) Activate the seat belt pretensioner.

(1) Connect the SST red clip to the battery positive (+) terminal and black clip to the battery negative (-) terminal.

(2) Check that no one is within 10 m (33 ft) area around the disc wheel.

(3) Press the SST activation switch and activate the seat belt pretensioner.

HINT:
The seat belt pretensioner operates simultaneously as the LED of the SST activation switch lights up.

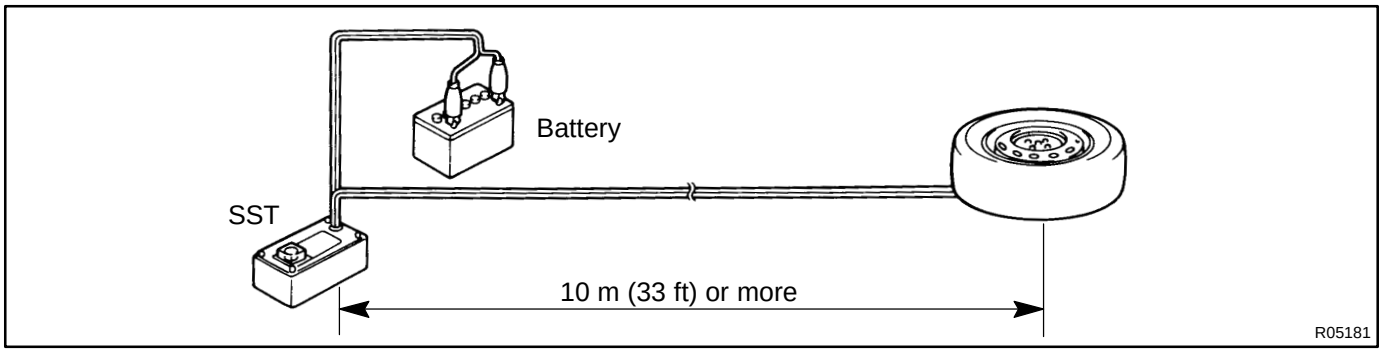

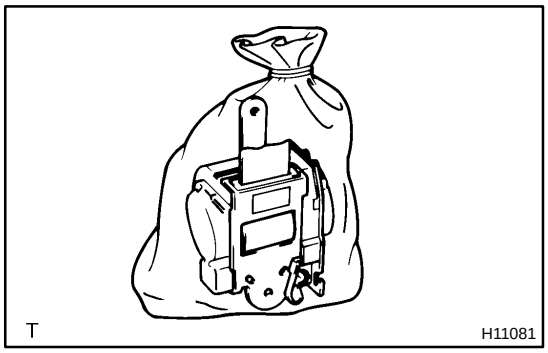

(e) Dispose of the front seat outer belt (with seat belt pretensioner).

CAUTION:

- ★ **The front seat outer belt is very hot when the seat belt pretensioner is activated, so leave it alone for at least 30 minutes after activation.**
- ★ **Use gloves and safety glasses when handling a front seat outer belt with the activated seat belt pretensioner.**
- ★ **Always wash your hands with water after completing the operation.**
- ★ **Do not apply water, etc. to a front seat outer belt with the activated seat belt pretensioner.**

(1) Remove the disc wheel and SST.

(2) Place the front seat outer belt in a vinyl bag, tie the end tightly and dispose of it in the same way as other general parts.

BO2QL-01

INSPECTION

1. PRETENSIONER IS NOT ACTIVATED

(a) Perform a diagnostic system check (See page DI-349).

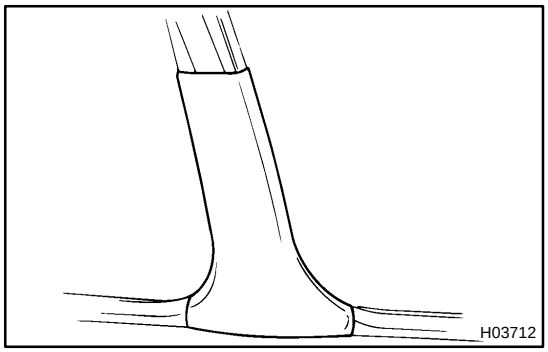

(b) Perform a visual check which includes the following items with the front seat outer belt removed from the vehicle.

★ Check for cuts and cracks in, or marked discoloration on the front quarter trim or center pillar lower garnish.

★ Check for cuts and cracks in wire harness, and for chipping in connectors.

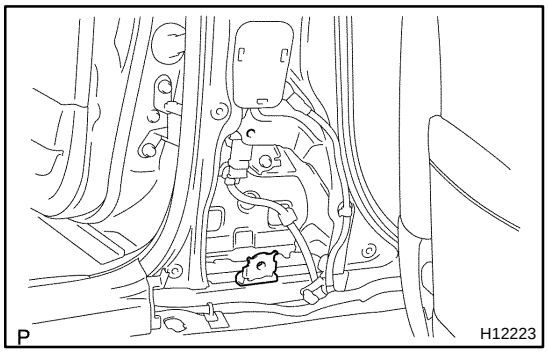

★ Check for deformation of the quarter panel or center pillar.

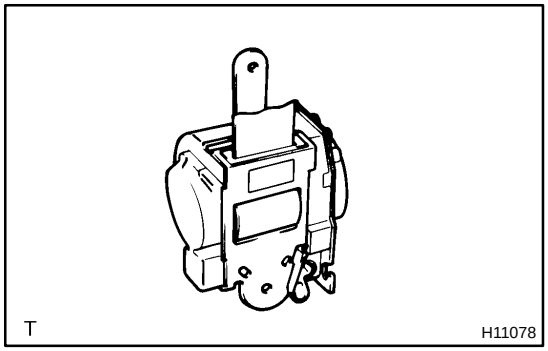

★ Check for cuts and minute cracks in wire harness or marked discoloration on the front seat outer belt.

CAUTION:
For removal and installation of the front seat outer belt, see page BO-128 and BO-137 .
Be sure to follow the correct procedure.

2. PRETENSIONER IS ACTIVATED

(a) Perform a diagnostic system check (See page DI-349).

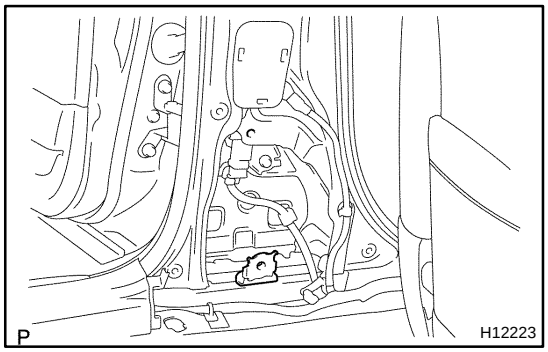

(b) Perform a visual check which includes the following items with the front seat outer belt removed from the vehicle.

★ Check for deformation of the quarter panel or center pillar.

★ Check for damage on the connector and wire harness.

BO2QO-01

INSTALLATION

NOTICE:

- ★ **Never use seat belt pretensioner from another vehicle. When replacing parts, replace them with new parts.**
- ★ **Make sure that the front seat outer belt is installed in the specified torque.**
- ★ **If the front seat outer belt has been dropped, or there are cracks, dents or any identified other defects in the case or connector, replace the front seat outer belt with a new one.**
- ★ **When installing the front seat outer belt, take care that the wiring does not interfere with other parts and is not pinched between other parts.**

1. INSTALL RETRACTOR OF FRONT SEAT OUTER BELT

(a) Install the retractor of front seat outer belt with the 2 bolts.
Torque:
Upper bolt: 7.5 N·m (76 kgf·cm, 66 in.·lbf)
Lower bolt: 41 N·m (420 kgf·cm, 30 ft·lbf)

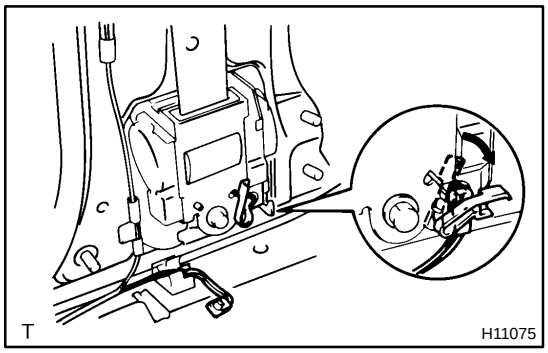

(b) Connect the pretensioner connector as shown in the illustration.

2. INSTALL FRONT SEAT OUTER BELT SHOULDER ANCHOR
Torque: 41 N·m (420 kgf·cm, 30 ft·lbf)

3. INSTALL CENTER PILLAR GARNISH

4. INSTALL LOWER CENTER PILLAR GARNISH

5. INSTALL FRONT SEAT OUTER BELT FLOOR ANCHOR
Torque: 41 N·m (420 kgf·cm, 30 ft·lbf)

6. INSTALL FRONT DOOR SCUFF INSIDE PLATE

SEAT BELT PRETENSIONER

BO2QK-01

REMOVAL

NOTICE:

- ★ **If the wiring connector of the seat belt pretensioner is disconnected with the ignition switch at ON or ACC, diagnostic trouble codes will be recorded.**
- ★ **Never use SRS parts from another vehicle. When replace parts, replace them with new parts.**

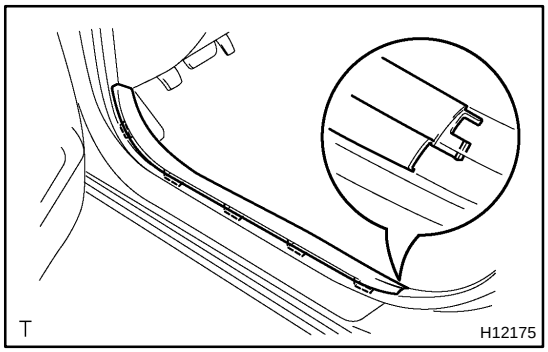

1. REMOVE FRONT DOOR SCUFF INSIDE PLATE

Remove the front door scuff inside plate.

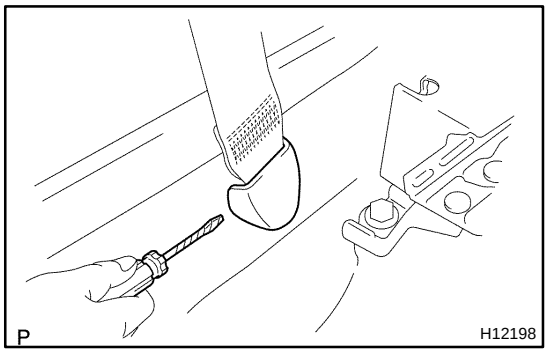

2. REMOVE LOWER CENTER PILLAR GARNISH

(a) Using a screwdriver, remove the lap belt outer anchor cover.

(b) Remove the front seat outer belt floor anchor.

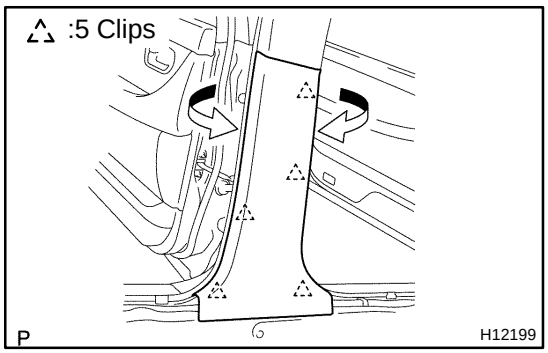

(c) Remove the lower center pillar garnish as shown in the illustration.

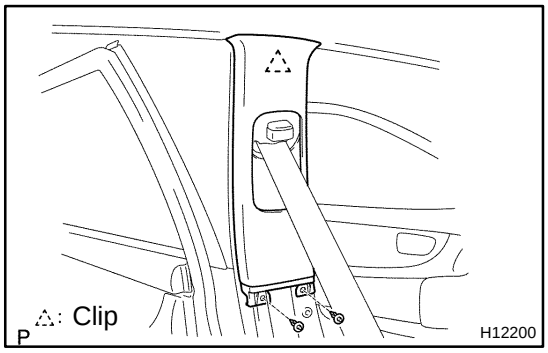

3. REMOVE CENTER PILLAR GARNISH

(a) Remove the 2 clips.

(b) Using a screwdriver, remove the center pillar garnish.

HINT:

Tape the screwdriver tip before use.

4. REMOVE FRONT SEAT OUTER BELT SHOULDER ANCHOR

5. REMOVE RETRACTOR OF FRONT SEAT OUTER BELT

CAUTION:
Never disassemble the front seat outer belt.
NOTICE:
When removing the retractor of front seat outer belt, take care not to pull the seat belt pretensioner wire harness.

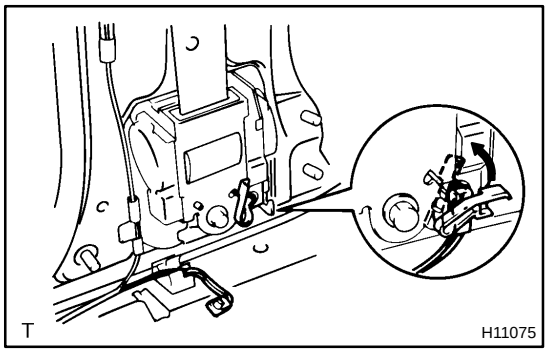

(a) Disconnect the pretensioner connector as shown in the illustration.

CAUTION:
When removing the seat belt pretensioner, work must be started 90 seconds after the ignition switch is turned to the "LOCK" position and negative (-) terminal cable is disconnected from the battery.

(b) Remove the 2 bolts and retractor of front seat outer belt.

BO2QN-01

REPLACEMENT

REPLACE REQUIREMENTS

In the following cases, replace the seat belt pretensioner.

- ★ If the seat belt pretensioner has been activated.
- ★ If the seat belt pretensioner has been found to be faulty in troubleshooting.
- ★ If the front seat outer belt has been found to be faulty during checking item 1-(b) or 2-(b) (See page BO-130).
- ★ If the front seat outer belt has been dropped.

CAUTION:

For removal and installation of the seat belt pretensioner, see page BO-128 and BO-137 .
Be sure to follow the correct procedure.

SEAT BELT

COMPONENTS

BO2QI-01

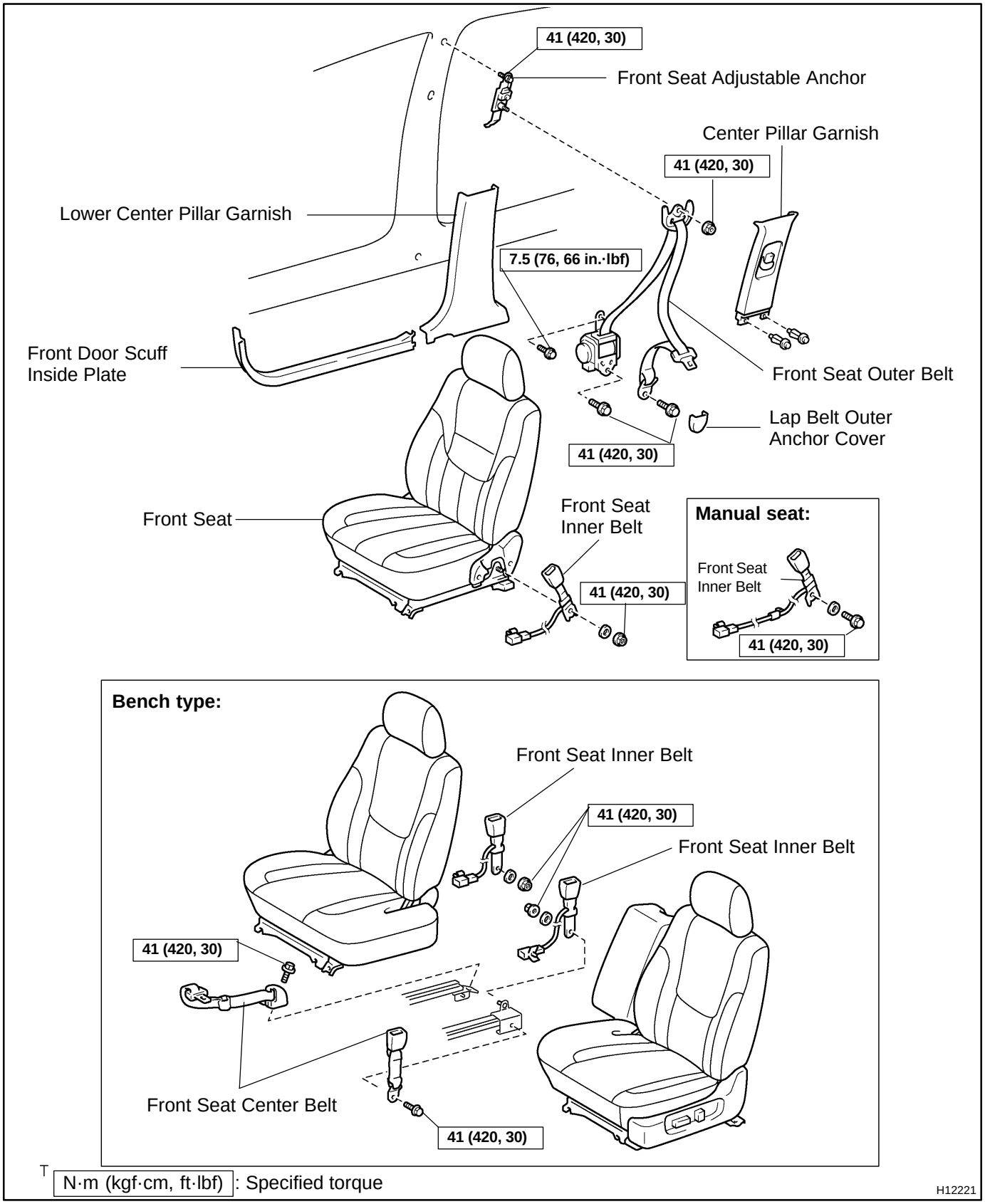

T N·m (kgf·cm, ft·lbf): Specified torque

H12221

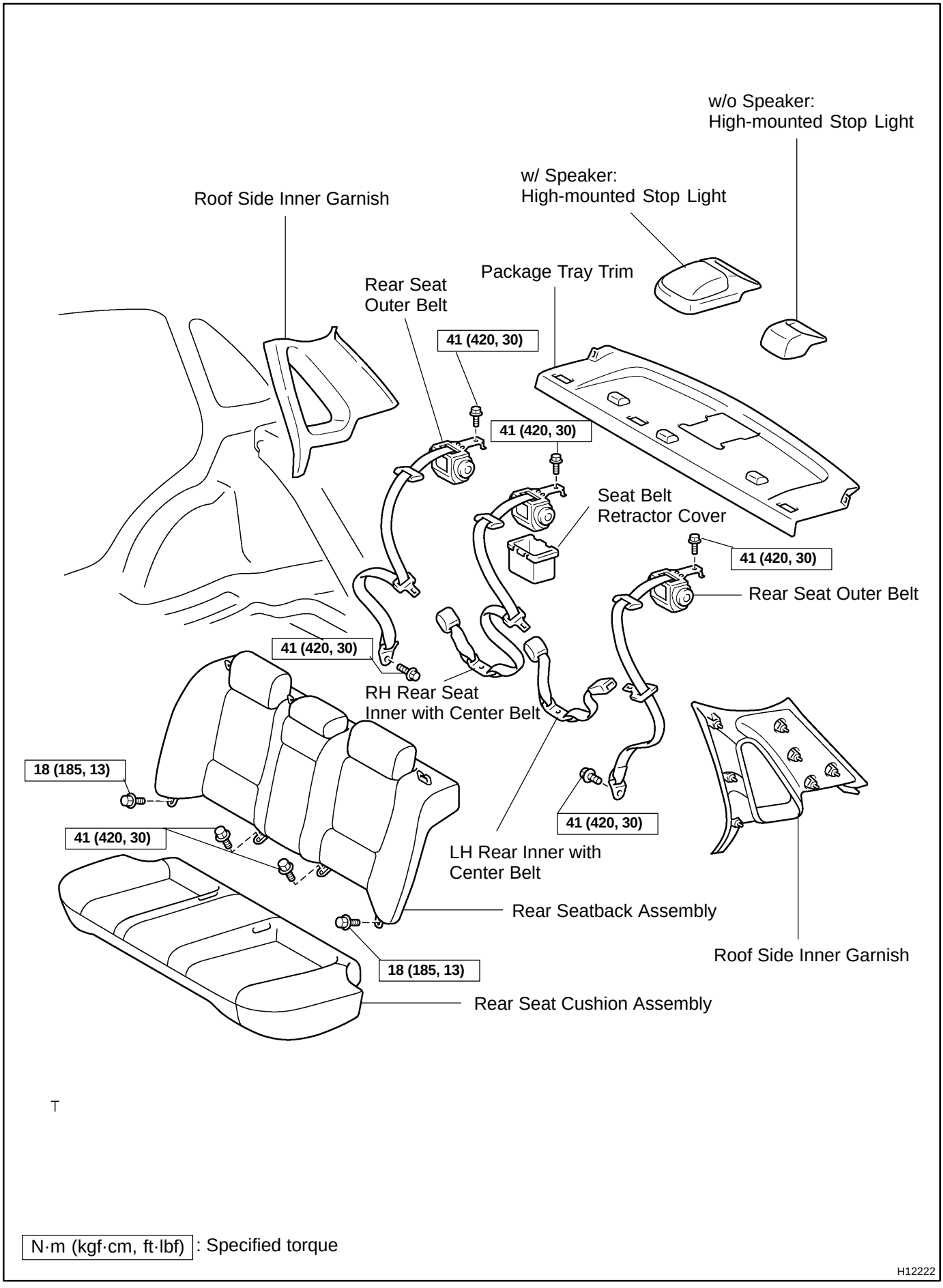

T

N·m (kgf·cm, ft·lbf) : Specified torque

H12222

BO2QJ-01

INSPECTION

CAUTION:

Replace the seat belt assembly (outer belt, inner belt, bolts, nuts or sill-bar) if it has been used in a severe impact. The entire assembly should be replaced even if damage is not obvious.

1. RUNNING TEST (IN SAFE AREA)

(a) Fasten the front seat belts.

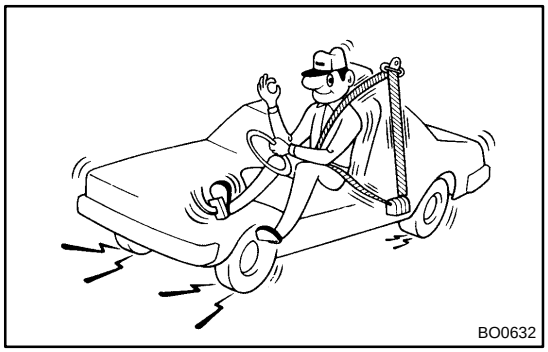
BO0632

(b) Drive the car at 10 mph (16 km/h) and slam on the brakes. Check that the belt locks and cannot be extended at this time.

HINT:

Conduct this test in a safe area. If the belt does not lock, remove the belt mechanism assembly and conduct the following static check. Also, whenever installing a new belt assembly, verify the proper operation before installation.

2. Driver's seat belt (ELR):

STATIC TEST

(a) Make sure that the belt locks when pulled out quickly.

(b) Remove the locking retractor assembly.

(c) Tilt the retractor slowly.

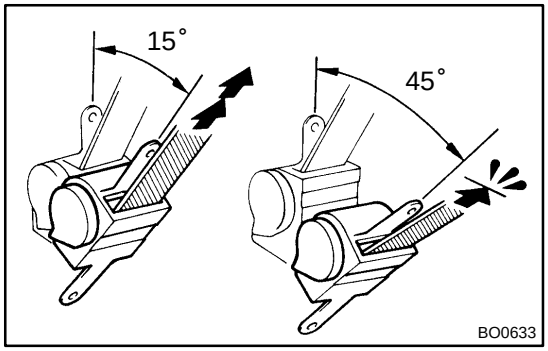

BO0633

(d) Make sure that the belt can be pulled out at a tilt of 15 degrees or less, and cannot be pulled out over 45 degrees of tilt.

If a problem is found, replace the assembly.

3. Except driver's seat belt (ALR/ELR):

STATIC TEST

(a) Make sure that the belt locks when pulled out quickly.

(b) Remove the locking retractor assembly.

(c) Pull out the whole belt and measure the length of the whole belt.

Then retract the belt slightly and pull it out again

(d) Make sure that the belt cannot be extended further.

If a problem is found, replace the assembly.

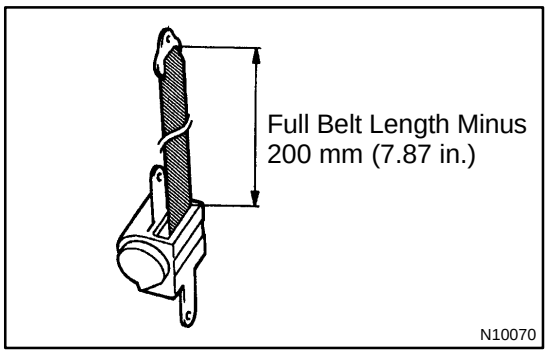

(e) Retract the whole belt, then pull out the belt until 200 mm (7.87 in.) of belt remains retracted.

(f) Tilt the retractor slowly.

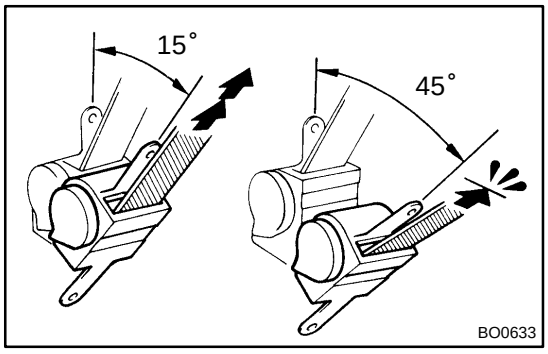

(g) Make sure that the belt can be pulled out at a tilt of 15 degrees or less, and cannot be pulled out at over 45 degrees of tilt.

If a problem is found, replace the assembly.

BO2PR-01

ADJUSTMENT

ADJUST SLIDING ROOF GLASS IN CLEARANCE

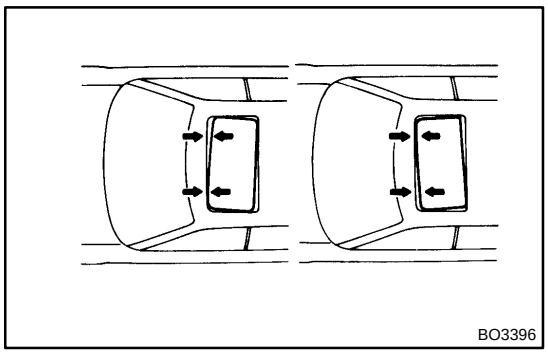

(a) When the front or rear/left or right alignment is not correct, remove the drive gear and sliding roof glass, then adjust the drive cable.

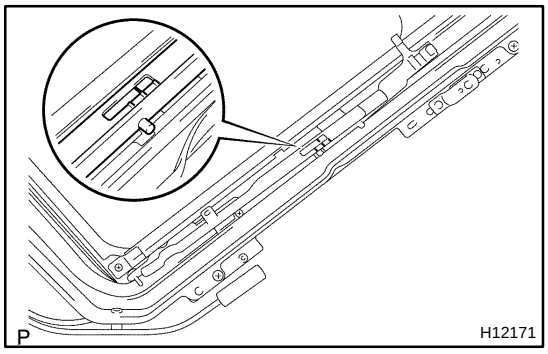

NOTICE:

Remove the drive gear with the sliding roof fully closed.

(b) Adjust by sliding the cable forward or rearward or rearward to align the 2 marks as shown.

(c) Install the driving ear and sliding roof glass.

BO2PO-01

COMPONENTS

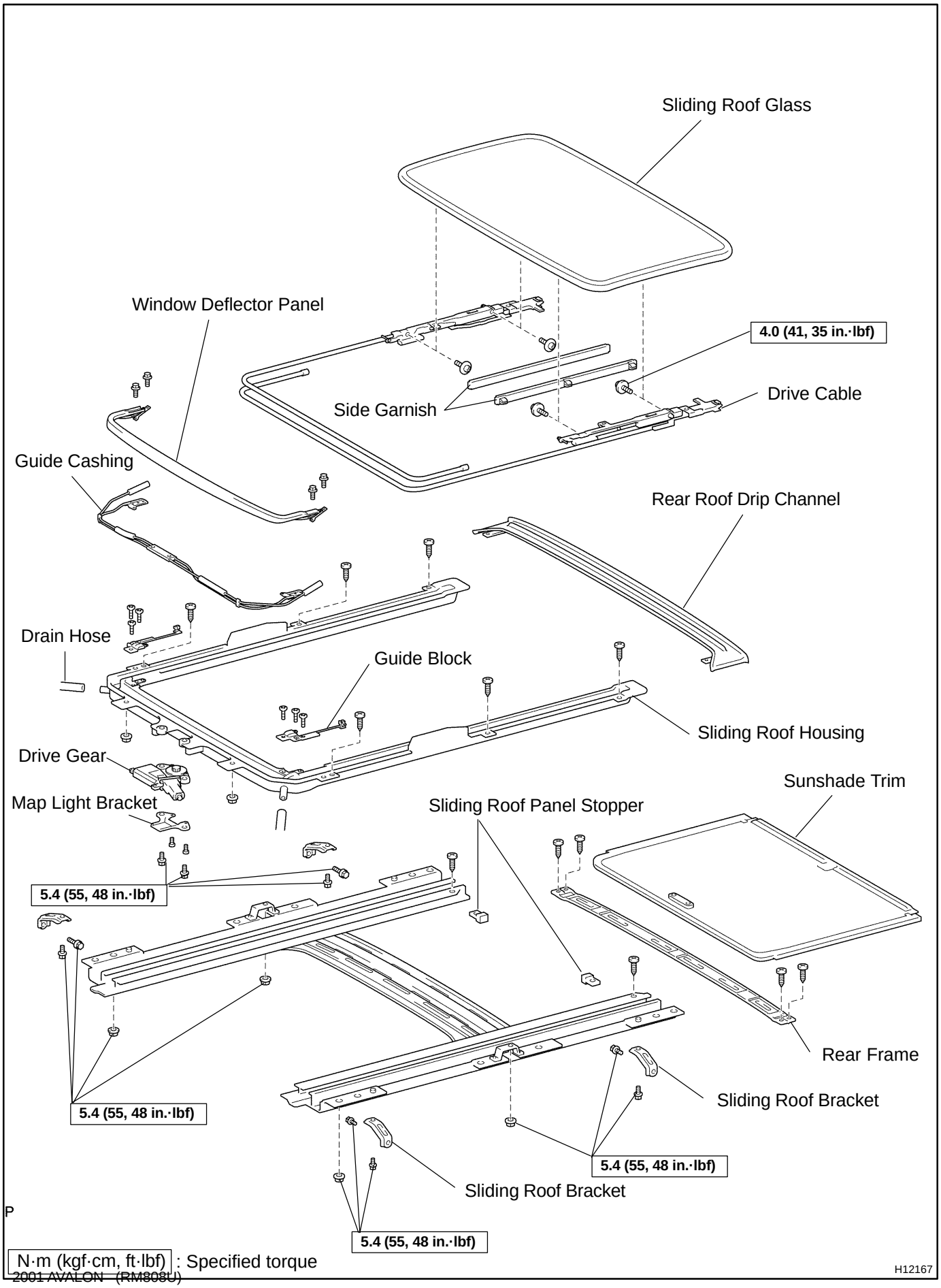

P

N·m (kgf·cm, ft·lbf) : Specified torque

H12167

BO2PQ-01

DISASSEMBLY

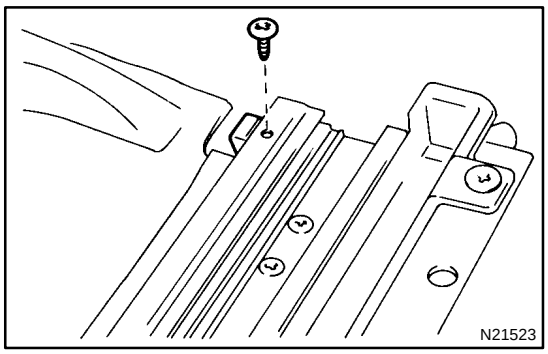

1. REMOVE SLIDING ROOF PANEL STOPPER

(a) Remove the screw and stopper.

(b) Employ the same manner described above to the other side.

2. REMOVE SUNSHADE TRIM

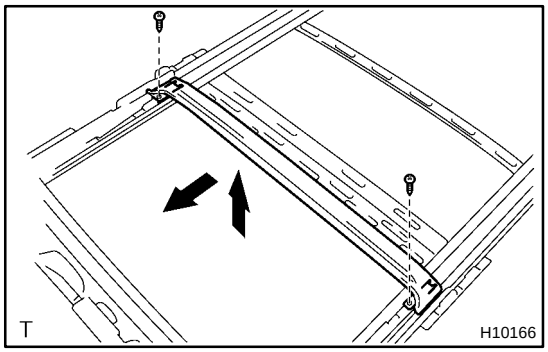

3. REMOVE REAR ROOF DRIP CHANNEL

Remove the 2 screws and rear roof drip channel as shown in the illustration.

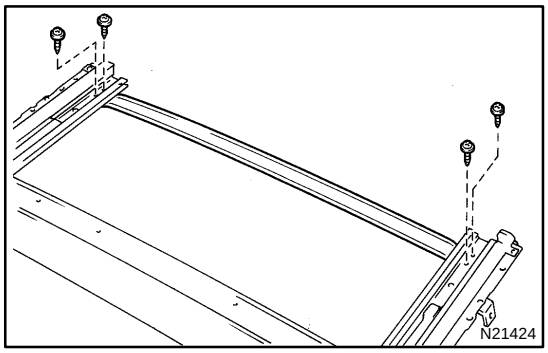

4. REMOVE REAR FRAME

Remove the 4 screws and rear frame.

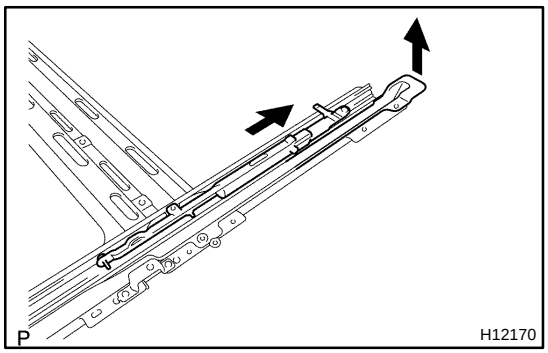

5. REMOVE DRIVE CABLE

(a) Remove the screws and guide rail stopper.

(b) Remove the screw from the sliding roof housing.

(c) Slightly lift the sliding roof housing, and slide the drive cable rearward to then remove it.

HINT:

★ At the time of reassembly, please refer to the following items.

★ Adjust the drive cable to a closed and tilted down position.

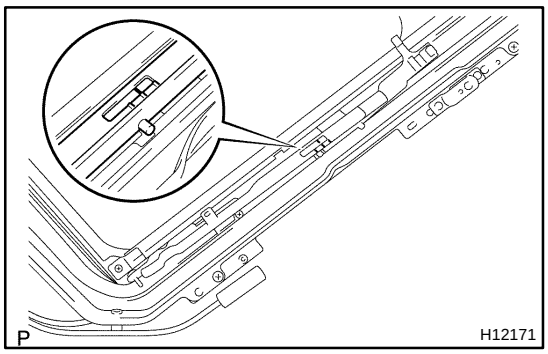

★ Slide the cable forward or backward to align the 2 marks as shown in the illustration.

★ Slide the cable to the forefront with your hand.

(d) Employ the same manner described above to the other side.

6. REMOVE WINDOW DEFLECTOR PANEL

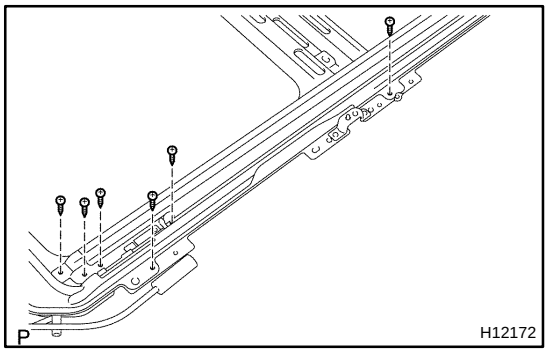

7. REMOVE SLIDING ROOF HOUSING

(a) Remove the 2 screws from the sliding roof housing.

(b) Remove the 4 screws from the guide block.

(c) Employ the same manner described above to the other side.

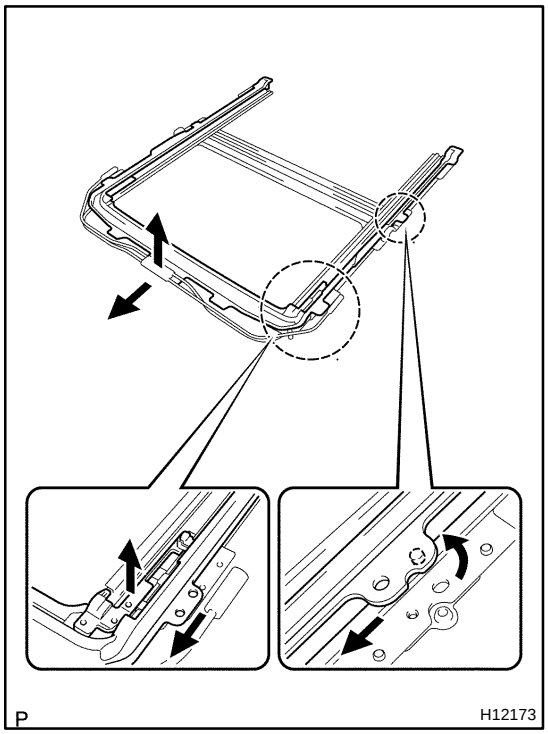

(d) Disconnect the sliding roof housing from the drive rail, and slide the sliding roof housing forward.

(e) Remove the 2 guide blocks.

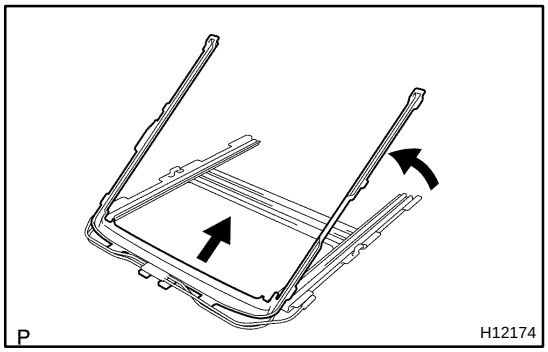

(f) Remove the sliding roof housing as shown in the illustration.

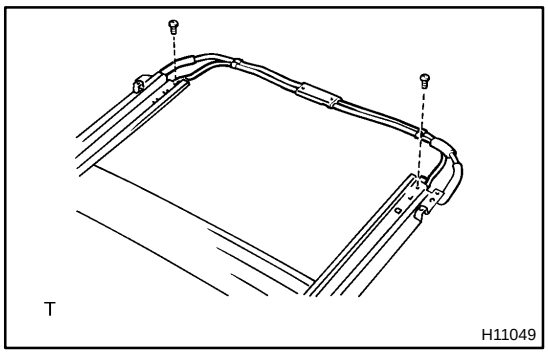

8. REMOVE CABLE GUIDE CASING

Remove the 2 screws and cable guide casing.

BO2PT-01

INSTALLATION

Installation is in the reverse order of removal (See page BO-79).

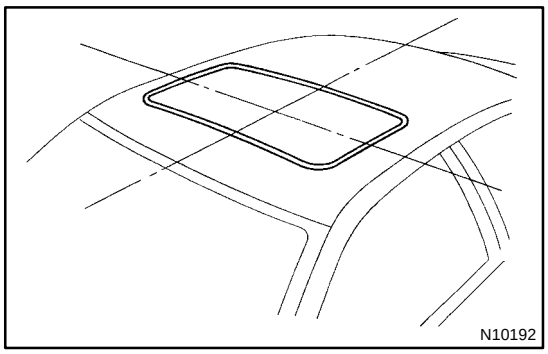

SLIDING ROOF

BO2PN-01

ON-VEHICLE INSPECTION

INSPECT SLIDING ROOF GLASS ALIGNMENT

(a) Start the engine and check the operation time of the sliding roof.
Operation time:
Approx. 6 secs.

(b) Check for abnormal noise or binding during operation.

(c) With the sliding roof fully closed, check for water leakage.

(d) Check for a difference in level between the sliding roof weatherstrip and roof panel.
Except rear corners:
0 ± 1.5 mm (0 ± 0.059 in.)
Rear corners:
0 + 1.5 mm (0 + 0.059 in.)
0 - 1.0 mm (0 - 0.039 in.)

BO2PS-01

REASSEMBLY

Reassembly is in the reverse order of disassembly (See page BO-81).

BO2PP-01

REMOVAL

1. REMOVE ROOF HEADLINING (See page BO-99)

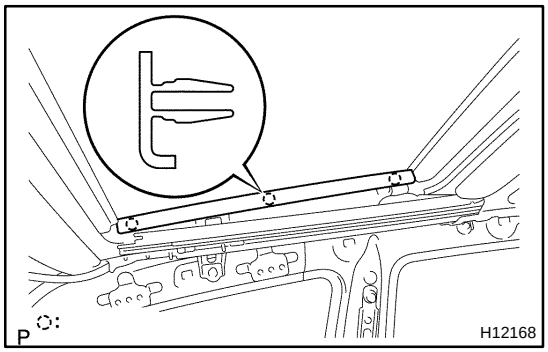

2. REMOVE SIDE GARNISH

(a) Using a screwdriver, remove the garnish.

HINT:

Tape the screwdriver tip before use.

(b) Employ the same manner described above to the other side.

3. REMOVE SLIDING ROOF GLASS ASSEMBLY

(a) Using a torx wrench, remove the 4 nuts.

Torque: 4.0 N·m (41 kgf·cm, 35 in.·lbf)

(b) Pull the glass upward to remove it.

4. REMOVE DRIVE GEAR

NOTICE:

Remove the drive gear with the sliding roof fully closed.

(a) Disconnect the connector.

(b) Remove the 2 bolts an drive gear.

Torque: 5.4 N·m (55 kgf·cm, 48 in.·lbf)

(c) Remove the 2 screws and map light bracket from the drive gear.

5. REMOVE SLIDING ROOF HOUSING

(a) Disconnect the 4 drain hoses from the housing.

(b) Remove the 8 bolts and 4 brackets.
Torque: 5.4 (55 kgf·cm, 48 in.·lbf)

(c) Remove the 6 nuts, then remove the sliding roof housing.
Torque: 5.4 (55 kgf·cm, 48 in.·lbf)

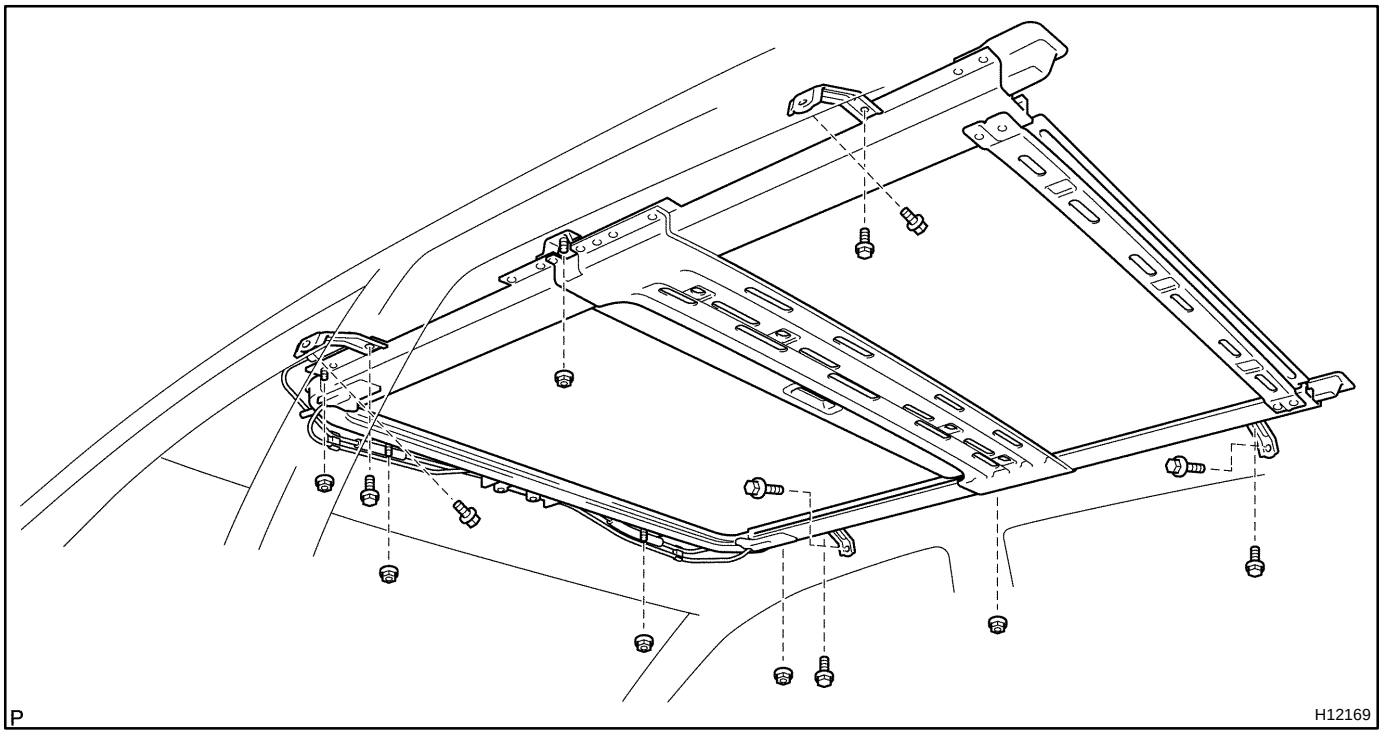

SRS AIRBAG

BO0XI-03

PRECAUTION

The AVALON is equipped with an SRS (Supplemental Restraint System) such as the driver airbag, front passenger airbag and side airbag. Failure to carry out service operation in the correct sequence could cause the SRS to unexpectedly deploy during servicing, possibly leading to a serious accident. Before servicing (including removal or installation of parts, inspection or replacement), be sure to read the precautionary notices in the RS section.

SRS AIRBAG

BO0XI-03

PRECAUTION

The AVALON is equipped with an SRS (Supplemental Restraint System) such as the driver airbag, front passenger airbag and side airbag. Failure to carry out service operation in the correct sequence could cause the SRS to unexpectedly deploy during servicing, possibly leading to a serious accident. Before servicing (including removal or installation of parts, inspection or replacement), be sure to read the precautionary notices in the RS section.

WINDSHIELD

COMPONENTS

BO2PE-01

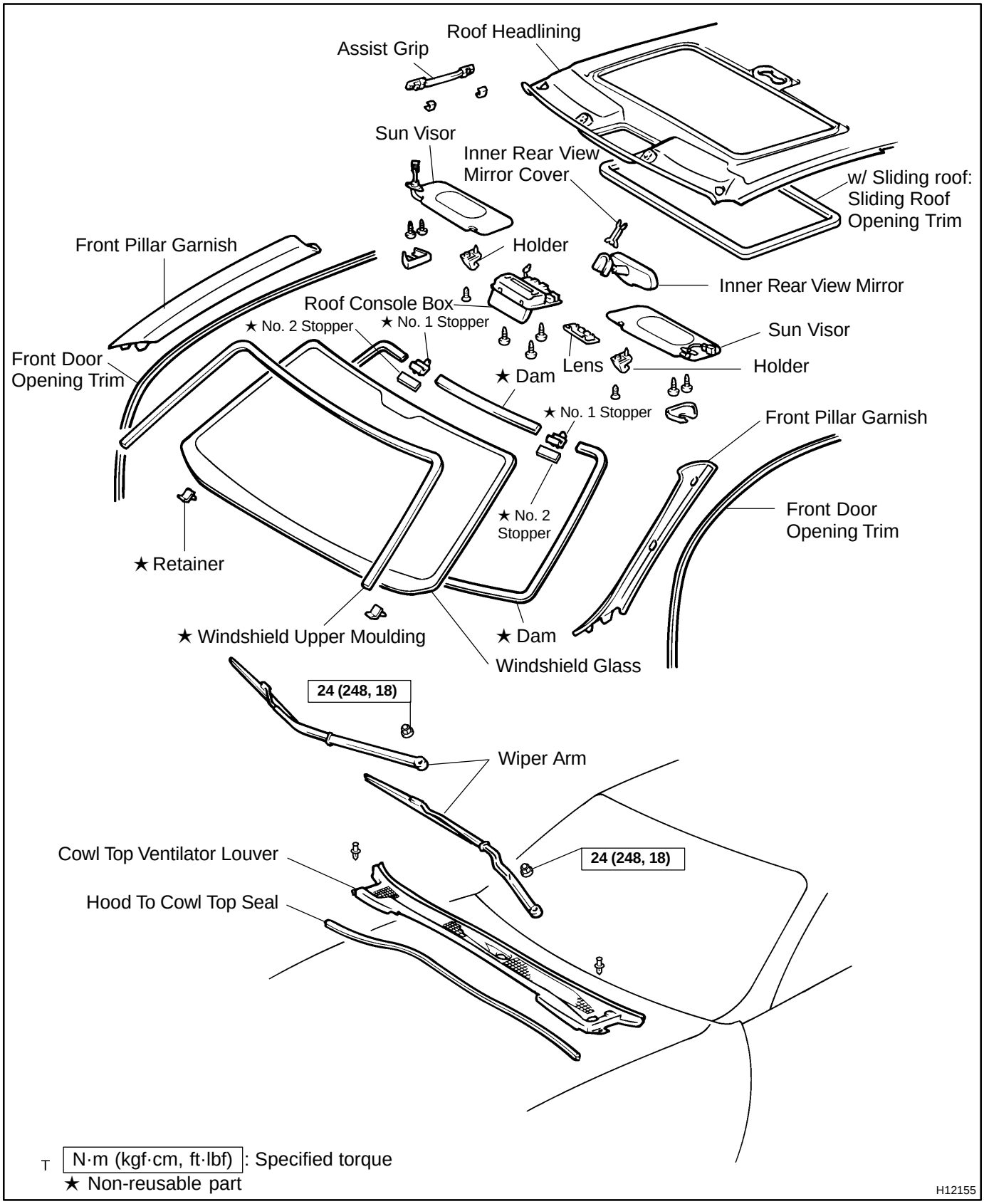

BO2PG-01

INSTALLATION

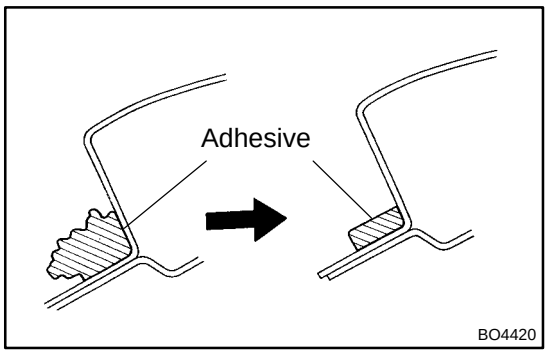

1. CLEAN AND SHAPE CONTACT SURFACE OF BODY

(a) Using a knife, cut away any rough areas on the body.

HINT:

Leave of the adhesive on the body as much as possible.

(b) Clean the cut surface of the adhesive with a piece of shop rag saturated in cleaner.

HINT:

Even if all the adhesive has been removed, clean the body.

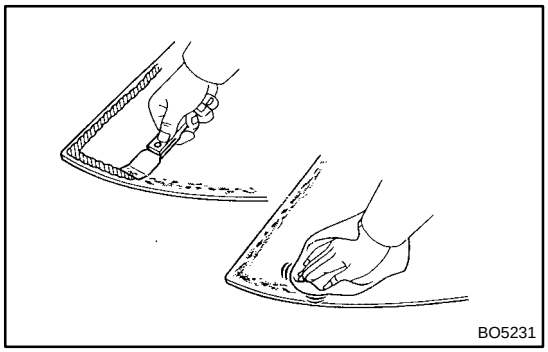

2. CLEAN REMOVED GLASS

(a) Remove the damaged No. 2 stoppers and dams.

(b) Using a scraper, remove the adhesive sticking to the glass.

(c) Clean the glass with cleaner.

NOTICE:

★ **Be careful not to damage the glass.**

★ **Do not touch the glass face after cleaning it.**

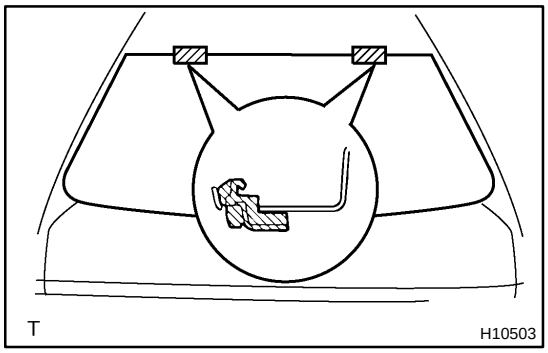

3. REPLACE NO. 1 STOPPERS

(a) Remove the damaged stoppers.

(b) Cut off the old adhesive around the stopper installation area.

NOTICE:

Be careful not to damage the body.

(c) Clean the installation area.

(d) Attach new stoppers to the body so that the notches on the body will align with the stoppers as shown in the illustration.

HINT:

Make sure that the stoppers are installed facing in the correct direction.

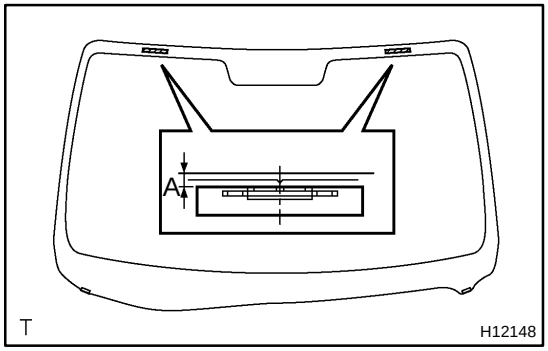

4. INSTALL NEW NO. 2 STOPPERS

Attach new stoppers to the glass so that the ceramic notches on the glass will align with the stoppers as shown in the illustration.

HINT:

Make sure that the stoppers are installed facing the correct direction.

A: 7.2 ± 0.5 mm (0.283 ± 0.020 in.)

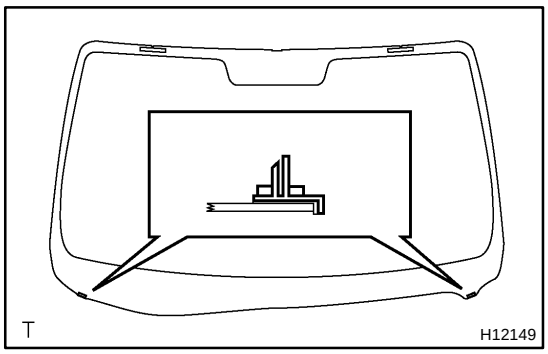

5. INSTALL NEW RETAINERS

Attach new retainers to the glass with the ceramic notch on the glass aligned with the retainers as shown in the illustration.

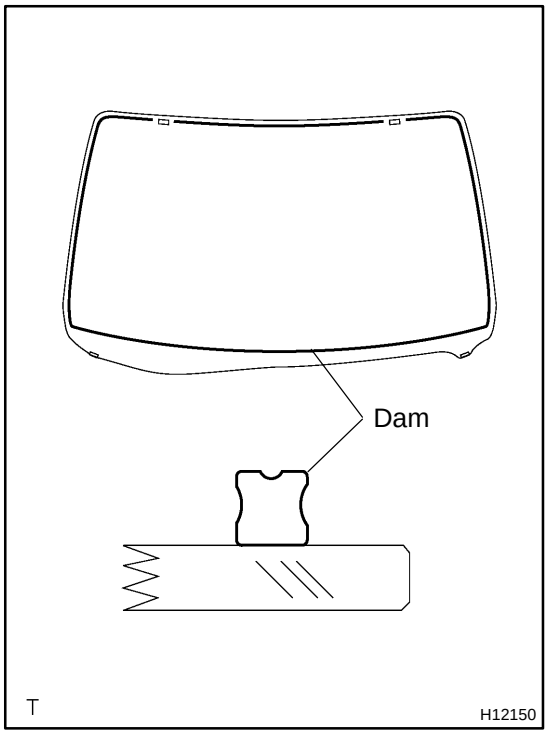

6. INSTALL NEW DAMS

Attach new dams to the glass as shown in the illustration.

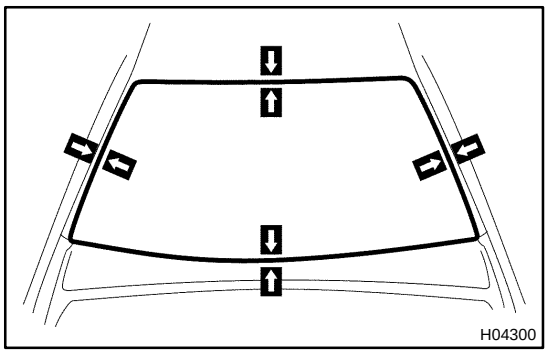

7. POSITION GLASS

(a) Place the glass in the correct position.
(b) Check that all contacting parts of the glass rim are set perfectly even.
(c) Place reference marks on the glass and body.
(d) Remove the glass.

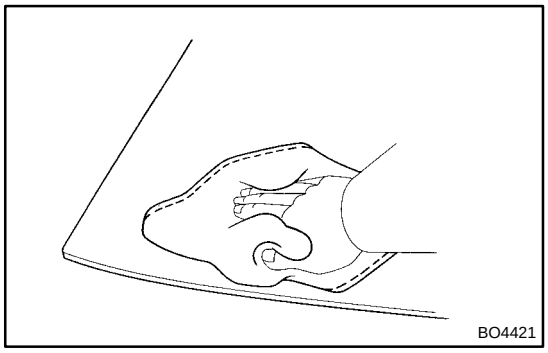

8. CLEAN CONTACT SURFACE OF GLASS

Using a cleaner, clean the contact surface which is black-colored area around the entire glass rim.

NOTICE:

Do not touch the glass face after cleaning it.

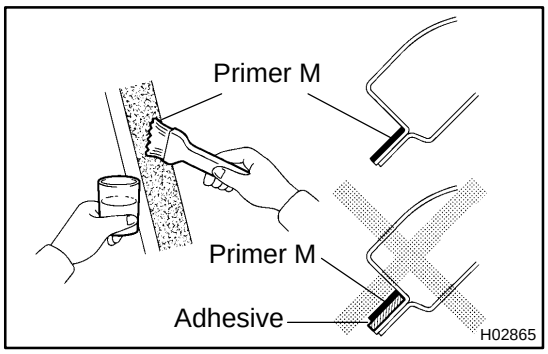

9. COAT CONTACT SURFACE OF BODY WITH PRIMER "M"

Using a brush, coat Primer M to the exposed part of body on the vehicle side.

NOTICE:

- ★ **Allow 3 minutes or more to dry the primer coated surface.**
- ★ **Do not coat Primer M to the adhesive.**
- ★ **Do not keep any of the opened Primer M for later use.**

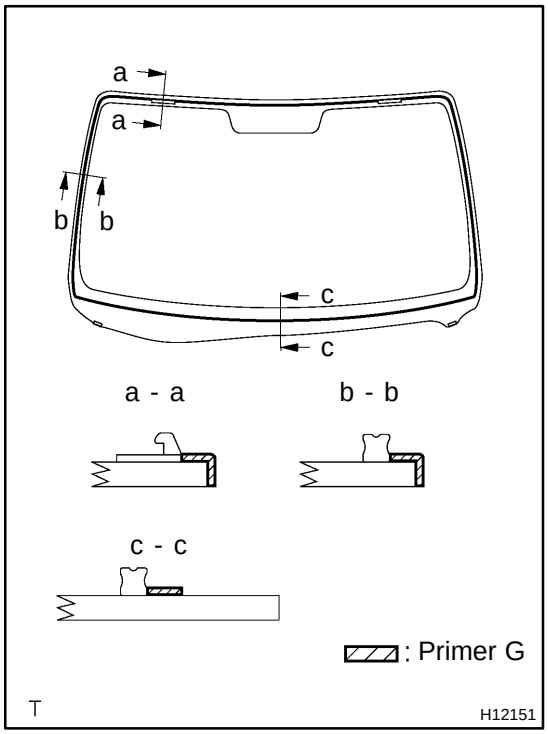

10. COAT CONTACT SURFACE OF GLASS WITH PRIMER "G"

(a) Using a brush or sponge, coat the edge of the glass and the contact surface with Primer G as shown in the illustration.

(b) When the primer is applied by mistake to the area other than the specified, wipe it off with a clean shop rag before the primer dries.

NOTICE:

- ★ **Allow 3 minutes or more to dry the primer coated surface.**
- ★ **Do not keep any of the opened Primer G for later use.**

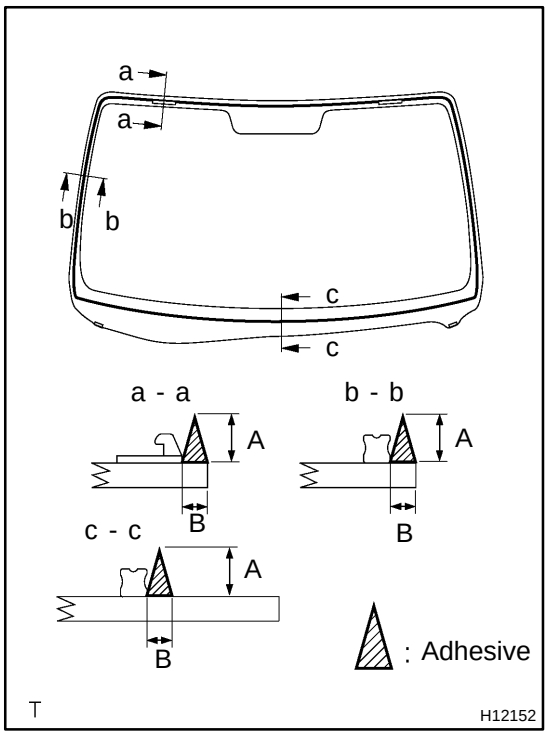

11. APPLY ADHESIVE

(a) Cut off the tip of the cartridge nozzle.
Part No. 08850-00801 or equivalent

HINT:

After cutting off the tip, use all adhesive within the time described in the table below.

Temperature	Tackfree time
35 ˚C (95 ˚F)	15 minutes
20 ˚C (68 ˚F)	100 minutes
5 ˚C (41 ˚F)	8 hours

(b) Load the cartridge into the sealer gun.

(c) Coat the glass with adhesive as shown in the illustration.
A: 13.5 mm (0.531 in.)
B: 8.0 mm (0.315 in.)

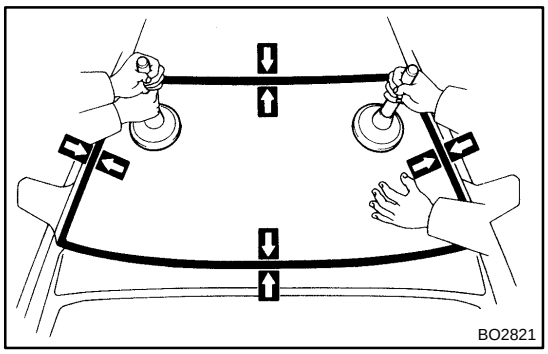

12. INSTALL WINDSHIELD GLASS AND MOULDING

(a) Install the glass, aligning the reference marks using a suction rubber.

HINT:

Check to see that the stoppers are attached to the body correctly.

(b) Lightly press the glass front surface for close contact.

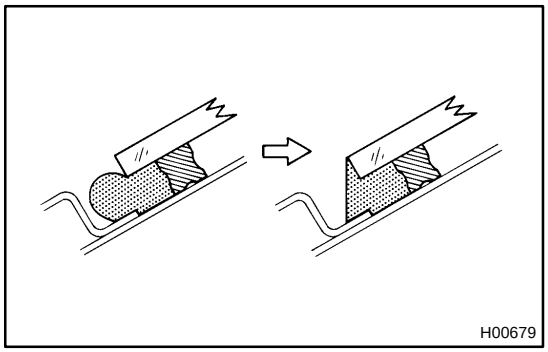

(c) Correct insufficient or protruded adhesive agent using a spatula.

HINT:

Apply adhesive agent up to the windshield glass edge.

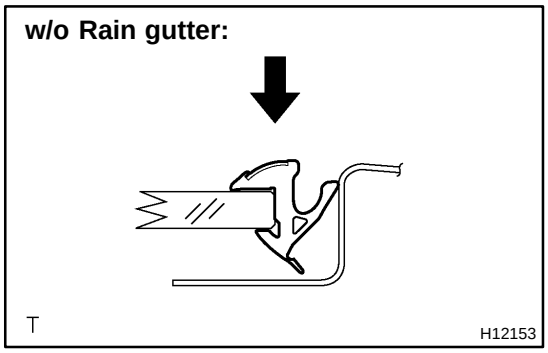

(d) Install a new windshield moulding to the windshield glass before the adhesive agent hardens.

HINT:

Install the moulding, aligning the center of moulding with the center of body.

(e) Remove any excessive adhesive agent before it hardens.

(f) Hold the glass and moulding in place securely with a protective tape or equivalent until the adhesive hardens.

NOTICE:

Take care not to drive the vehicle during the time described in the table below.

Temperature	Minimum time prior to driving the vehicle
35 °C (95 °F)	1.5 hours
20 °C (68 °F)	5 hours
5 °C (41 °F)	24 hours

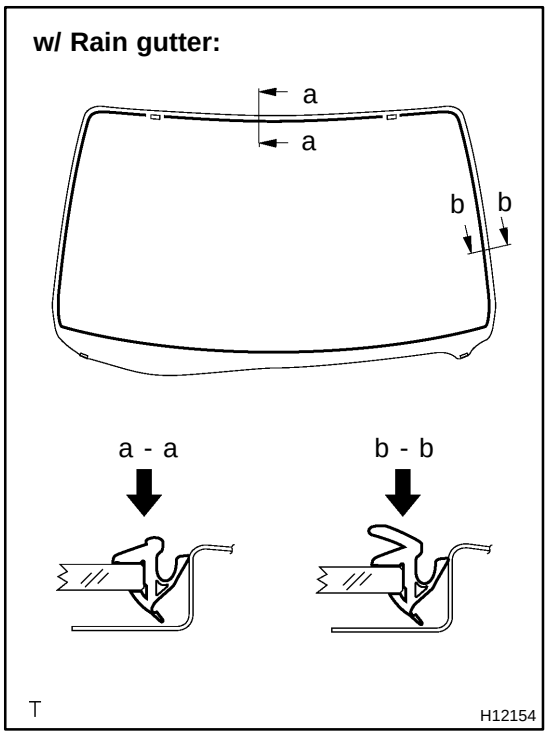

13. INSPECT FOR LEAK AND REPAIR

NOTICE:

Conduct a leak test after the hardening time has elapsed.

14. w/ Sliding roof:

INSTALL SLIDING ROOF OPENING TRIM

15. INSTALL ASSIST GRIP

16. INSTALL COWL TOP VENTILATOR LOUVER

17. INSTALL HOOD TO COWL TOP SEAL

18. INSTALL WIPER ARMS

(a) Operate the wiper motor once and turn the wiper switch OFF.

(b) Install the wiper arms and tighten nuts by hand.

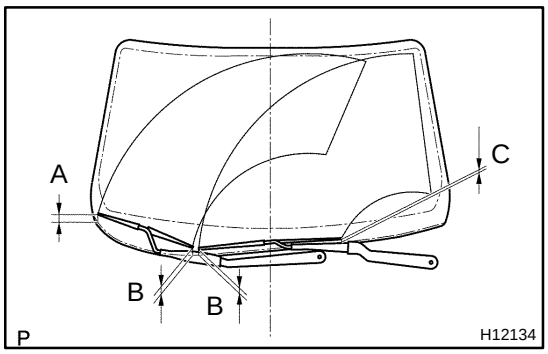

(c) Adjust the installation position of the wiper arms to the position as shown in the illustration.
A: 52 mm (2.05 in.)
B: 30 ± 10 mm (1.18 ± 0.39 in.)
C: 21.3 mm (0.839 in.)

(d) Torque the 2 nuts.
Torque: 24 N·m (248 kgf·cm, 18 ft·lbf)

(e) Install the 2 wiper arm head caps.

19. INSTALL FRONT PILLAR GARNISH

20. INSTALL FRONT DOOR OPENING TRIMS

21. INSTALL ROOF CONSOLE BOX

22. INSTALL SUN VISORS AND HOLDERS

23. INSTALL INNER REAR VIEW MIRROR

BO2PF-01

REMOVAL

1. REMOVE INNER REAR VIEW MIRROR

(a) w/ Electrochromic rear view mirror:
Using a screwdriver, remove the inner rear view mirror cover.

HINT:
Tape the screwdriver tip before use.

(b) w/ Electrochromic rear view mirror:
Disconnect the connector.

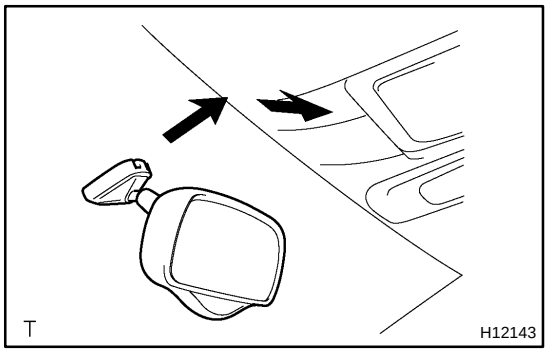

(c) Remove the inner rear view mirror as shown in the illustration.

2. REMOVE SUN VISORS AND HOLDERS

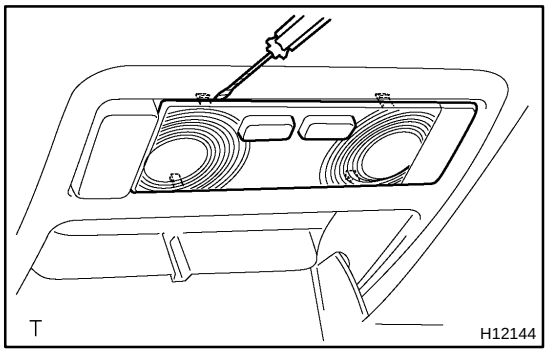

3. REMOVE ROOF CONSOLE BOX

(a) Using a screwdriver, remove the map light lens.

HINT:
Tape the screwdriver tip before use.

(b) Remove the 3 screws and roof console box, then disconnect the connector.

4. REMOVE FRONT DOOR OPENING TRIMS

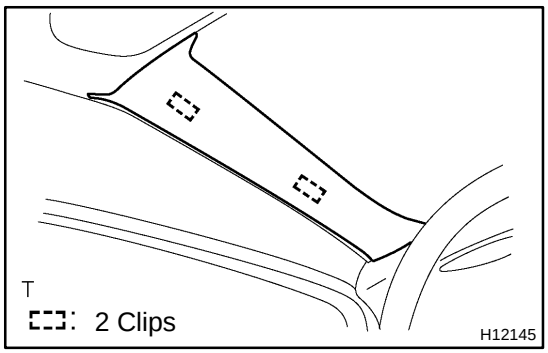

5. REMOVE FRONT PILLAR GARNISH

(a) Remove the front pillar garnish.

(b) Employ the same manner described above to the other side.

6. REMOVE WIPER ARMS

7. REMOVE HOOD TO COWL TOP SEAL

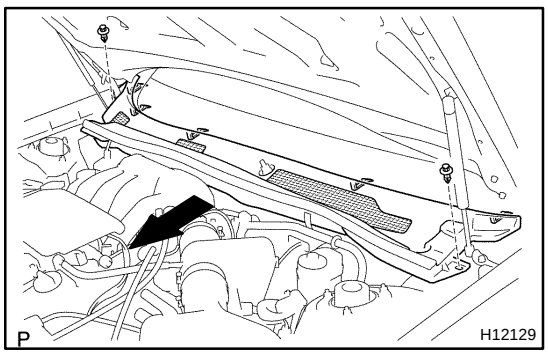

8. REMOVE COWL TOP VENTILATOR LOUVER

(a) Using a clip remover, remove the 2 clips.

(b) Remove the cowl top ventilator louver as shown in the illustration.

9. REMOVE ASSIST GRIP

10. w/ Sliding roof:
REMOVE SLIDING ROOF OPENING TRIM

w/ Rain gutter:

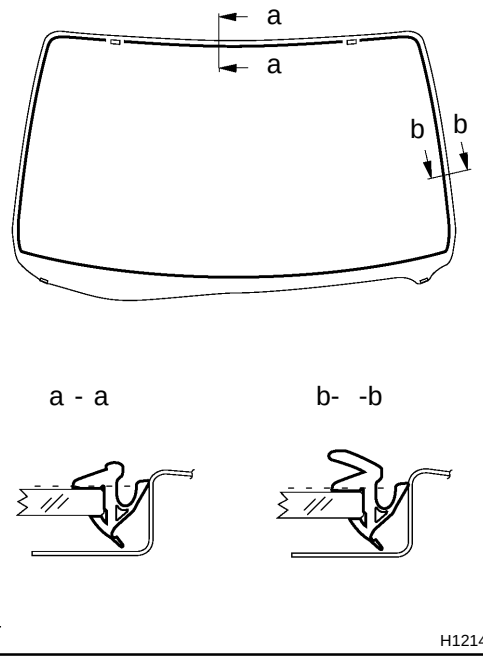

w/o Rain gutter:

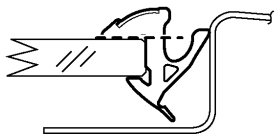

11. REMOVE WINDSHIELD UPPER MOULDING

(a) Using a knife, cut off the moulding as shown.

NOTICE:

Do do not damage the body with the knife.

(b) Remove the remaining moulding.

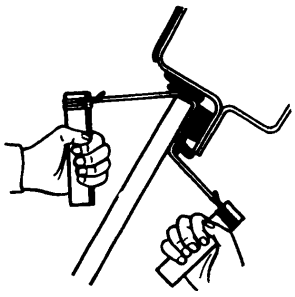

12. REMOVE WINDSHIELD GLASS

(a) Insert a piano wire between body and glass and let it pass through.

(b) Tie both wire ends to wooden blocks or similar objects.

HINT:

Apply protective tape to the outer surface to keep the surface from being scratched.

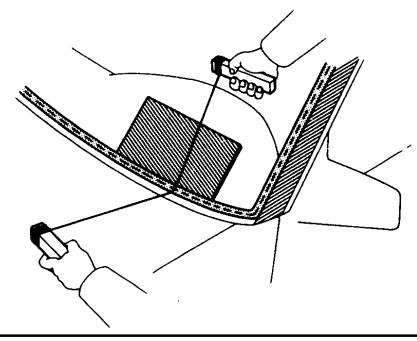

NOTICE:

When separating the glass, take care not to damage the paint and interior and exterior ornaments. To prevent the safety pad from being scratched when removing the windshield, place a plastic sheet between the piano wire and safety pad.

(c) Cut the adhesive by pulling the piano wire around it.

(d) Remove the glass.

NOTICE:

Leave of the adhesive on the body as much as possible when cutting off the glass.

ABS ACTUATOR

COMPONENTS

BR0LL-05

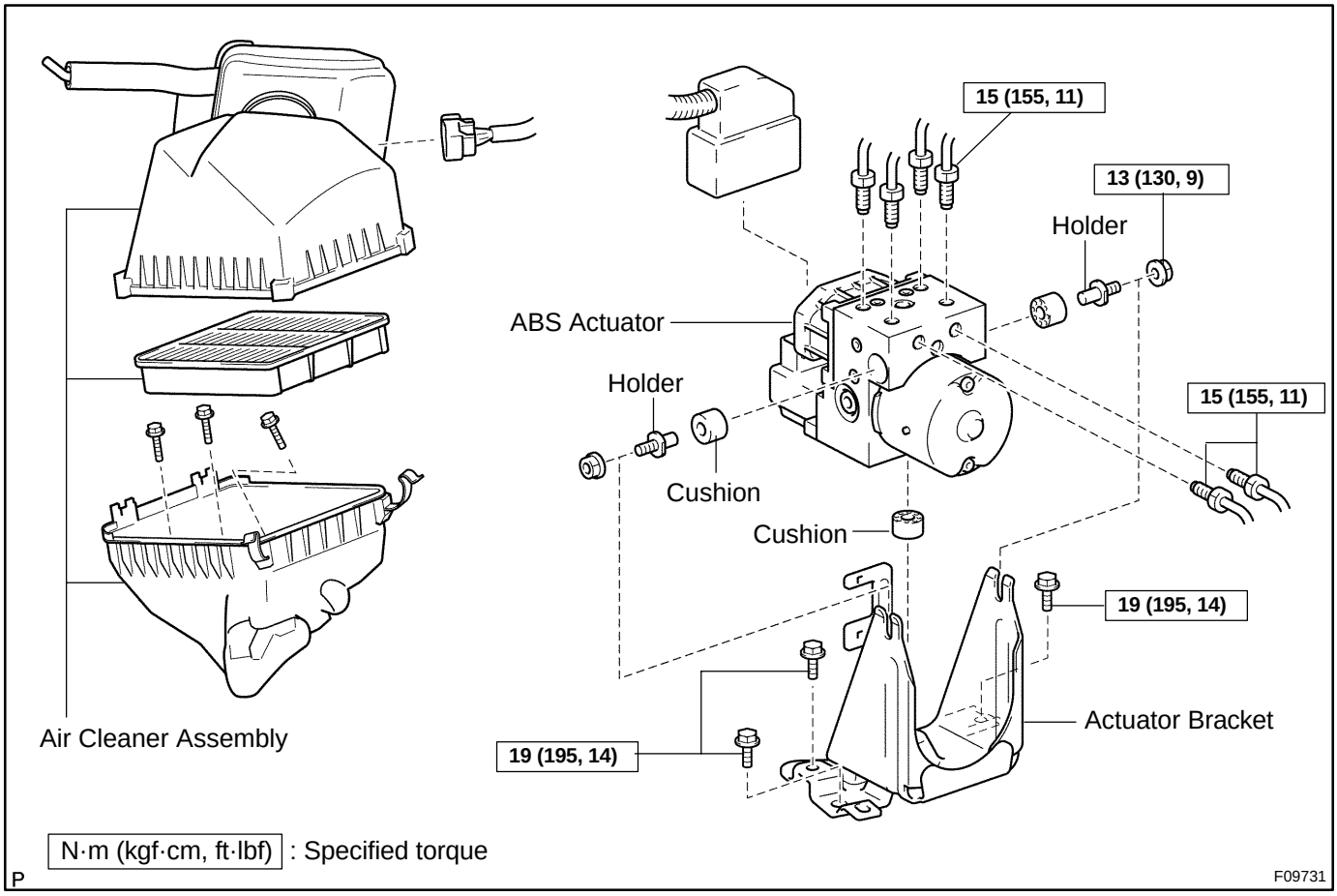

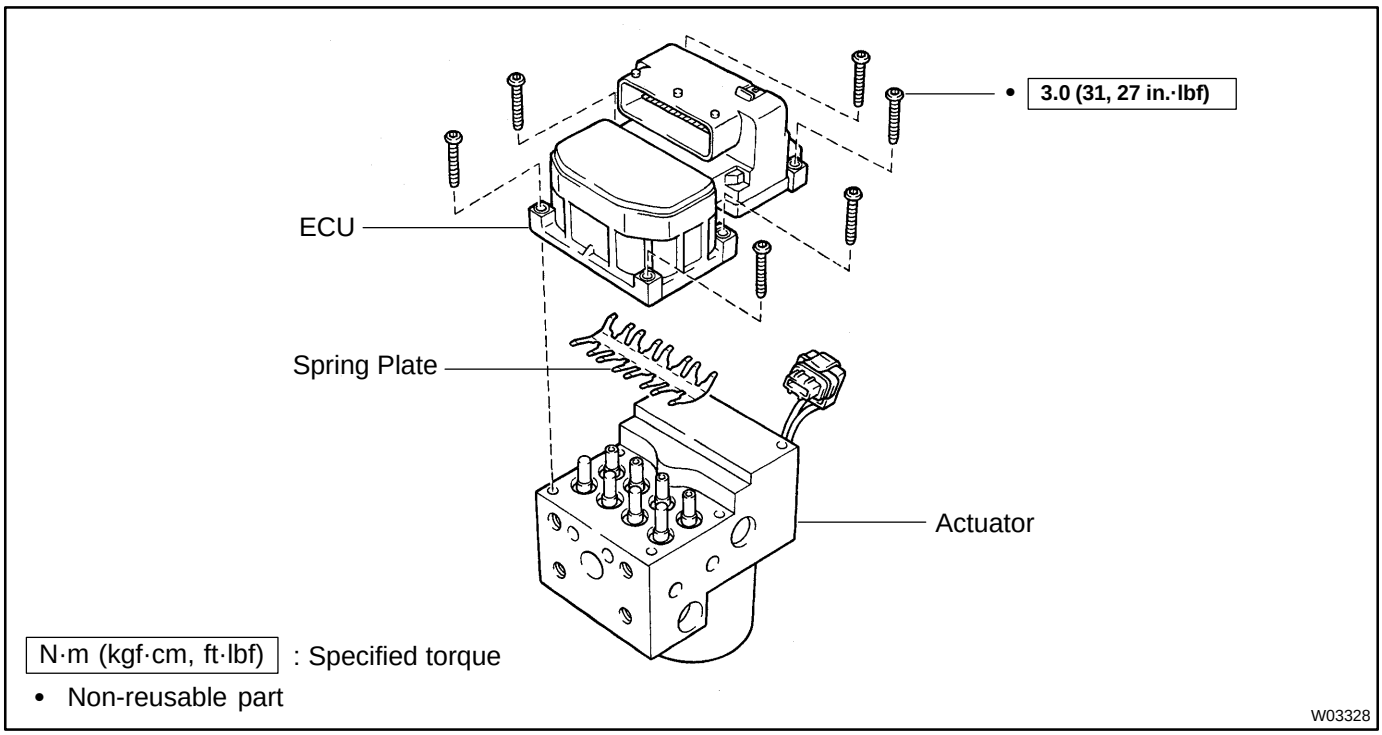

BR0LN-03

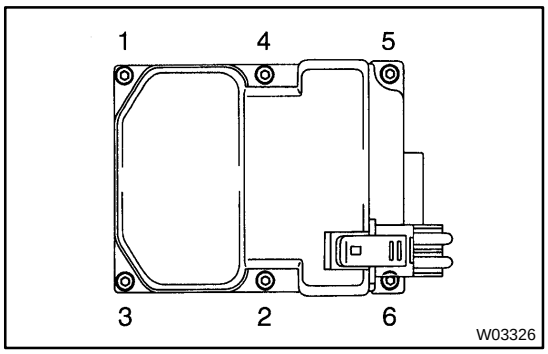

DISASSEMBLY

1. DISCONNECT CONNECTOR

2. REMOVE ECU

(a) Using a T20 torx wrench, loosen the 6 screws.

Torque: 3.0 N·m (31 kgf·cm, 27 in.·lbf)

NOTICE:

At the time of reassembly, tighten the screws according to the order shown on the left.

(b) Remove the ECU and spring plate from the actuator.

NOTICE:

Protect the actuator in order to prevent sealing surface from getting dirty and causing damage on the valve body. If the dirt and the like are stuck to the sealing surface, use plastic tools or soft objects to remove the dirt. Do not use chemical solvents.

BR0LP-04

INSTALLATION

Installation is in the reverse order of removal (See page BR-48).

HINT:

- After installation, fill the brake reservoir with brake fluid, bleed brake system (See page BR-4).
- Check for fluid leaks.

BR0LO-01

REASSEMBLY

Reassembly is in the reverse order of disassembly (See page BR-49).

BR154-01

REMOVAL

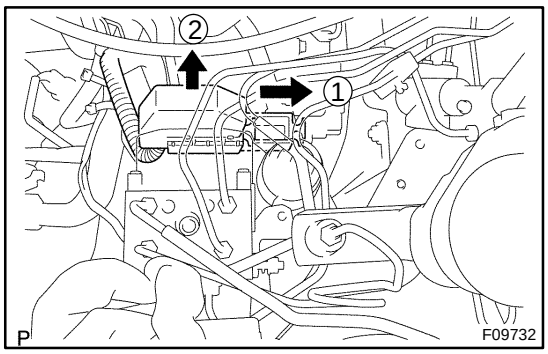

1. REMOVE AIR CLEANER ASSEMBLY

2. DISCONNECT CONNECTOR

Pull out the release bar, and disconnect the connector.

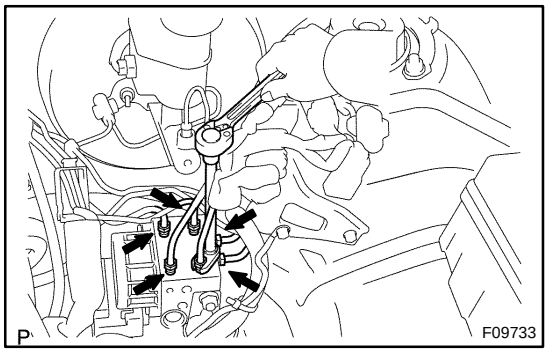

3. DISCONNECT BRAKE LINES

Using SST, disconnect the 6 brake lines from the ABS actuator.

SST 09023-00100

Torque: 15 N·m (155 kgf·cm, 11 ft·lbf)

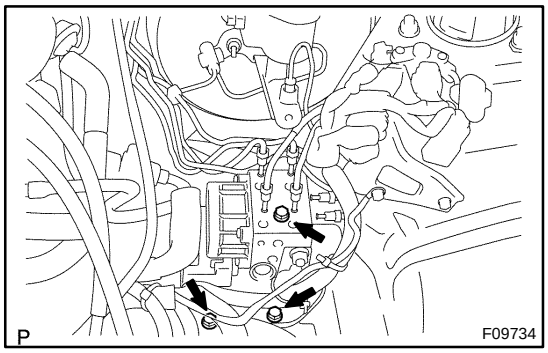

4. REMOVE ABS ACTUATOR ASSEMBLY

Remove the 3 bolts and ABS actuator assembly.

Torque: 19 N·m (195 kgf·cm, 14 ft·lbf)

5. REMOVE ABS ACTUATOR

(a) Remove the 2 nuts and ABS actuator.

Torque: 13 N·m (130 kgf·cm, 9 ft·lbf)

(b) Remove the 2 holders and 3 cushions from the ABS actuator.

BR156-01

COMPONENTS

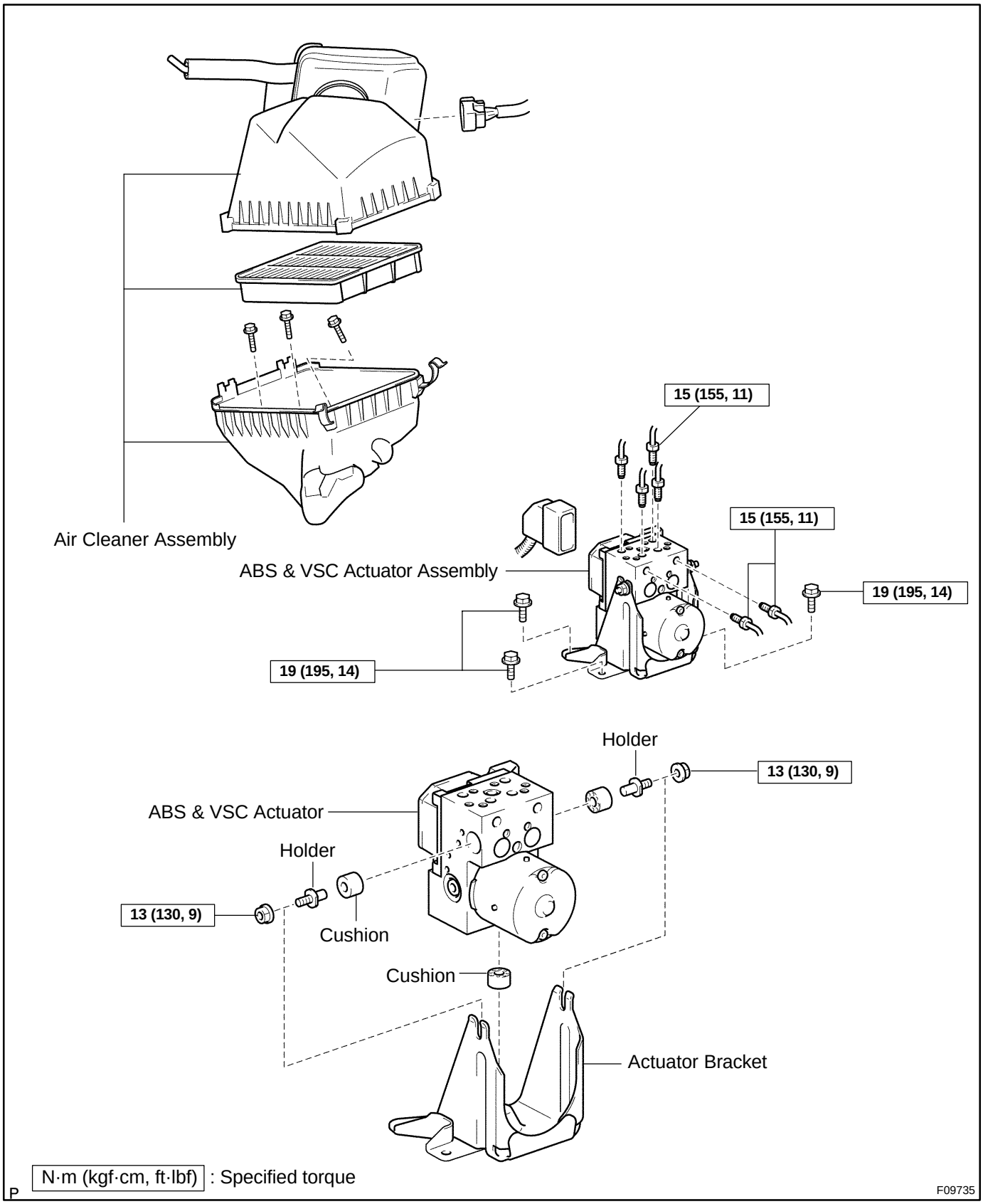

BR158-01

INSTALLATION

Installation is in the reverse order of removal (See page BR-54).

HINT:

- After installation, fill the brake reservoir with brake fluid, bleed brake system (See page BR-4).
- Check for fluid leaks.

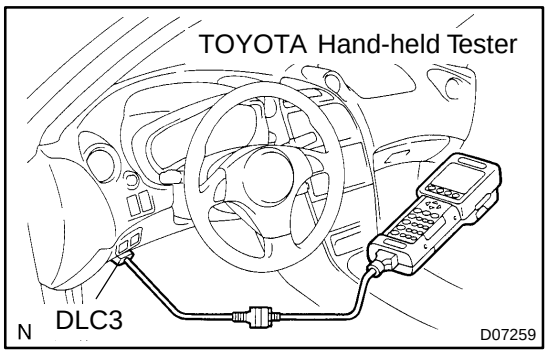

ABS & VSC ACTUATOR

BR155-01

ON-VEHICLE INSPECTION

1. CONNECT TOYOTA HAND-HELD TESTER:

(a) Connect the TOYOTA hand-held tester to the DLC3.

(b) Start the engine and run it at idle.

(c) Select the ACTIVE TEST mode on the TOYOTA hand-held tester.

Please refer to the TOYOTA hand-held tester operator's manual for further details.

2. INSPECT ACTUATOR MOTOR OPERATION

(a) With the motor relay ON, check the actuator motor operation noise.

(b) Turn the motor relay OFF.

(c) Depress the brake pedal and hold it for about 15 seconds. Check that the brake pedal cannot be depressed.

(d) With the motor relay ON, check that the pedal does not pulsate.

NOTICE:

Do not keep motor relay ON for more than 5 seconds continuously. When operating it continuously, set the interval of more than 20 seconds.

(e) Turn the motor relay OFF and release the brake pedal.

3. INSPECT RIGHT FRONT WHEEL OPERATION

NOTICE:

Never turn ON the solenoid which is not described below.

(a) With the brake pedal depressed, perform the following operations.

(b) Turn the SFRH and SFRR solenoid ON simultaneously, and check that the pedal cannot be depressed.

NOTICE:

Do not keep solenoid ON for more than 10 seconds continuously. When operating it continuously, set the interval of more than 20 seconds.

(c) Turn the SFRH and SFRR solenoid OFF simultaneously, and check that the pedal can be depressed.

(d) Turn the motor relay ON, and check that the pedal returns.

NOTICE:

Do not keep motor relay ON for more than 5 seconds continuously. When operating it continuously, set the interval of more than 20 seconds.

(e) Turn the motor relay OFF and release the brake pedal.

4. INSPECT OTHER WHEEL OPERATION

As in the same procedure, check the solenoids of other wheels.

HINT:

Left front wheel: SFLH, SFLR

Right rear wheel: SRRH, SRRR

Left rear wheel: SRLH, SRLR

5. CLEAR DTC (See page DI-252)

BR157-01

REMOVAL

1. REMOVE AIR CLEANER ASSEMBLY

2. DISCONNECT ABS & VSC ACTUATOR CONNECTOR

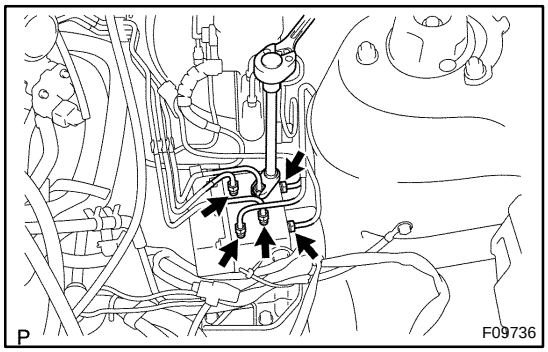

3. DISCONNECT BRAKE LINES

Using SST, disconnect the 6 brake lines from the ABS & VSC actuator.

SST 09023-00100

Torque: 15 N·m (155 kgf·cm, 11 ft·lbf)

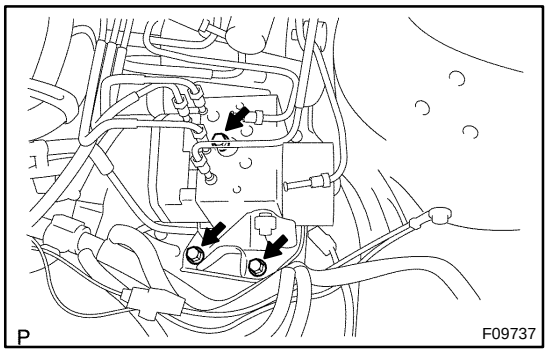

4. REMOVE ABS & VSC ACTUATOR ASSEMBLY

Remove the 3 bolts and ABS & VSC actuator assembly.

Torque: 19 N·m (195 kgf·cm, 14 ft·lbf)

5. REMOVE ABS & VSC ACTUATOR

(a) Remove the 2 nuts and ABS & VSC actuator from the bracket.

Torque: 13 N·m (130 kgf·cm, 9 ft·lbf)

(b) Remove the 2 holders and 3 cushions from the ABS & VSC actuator.

BR0KX-04

COMPONENTS

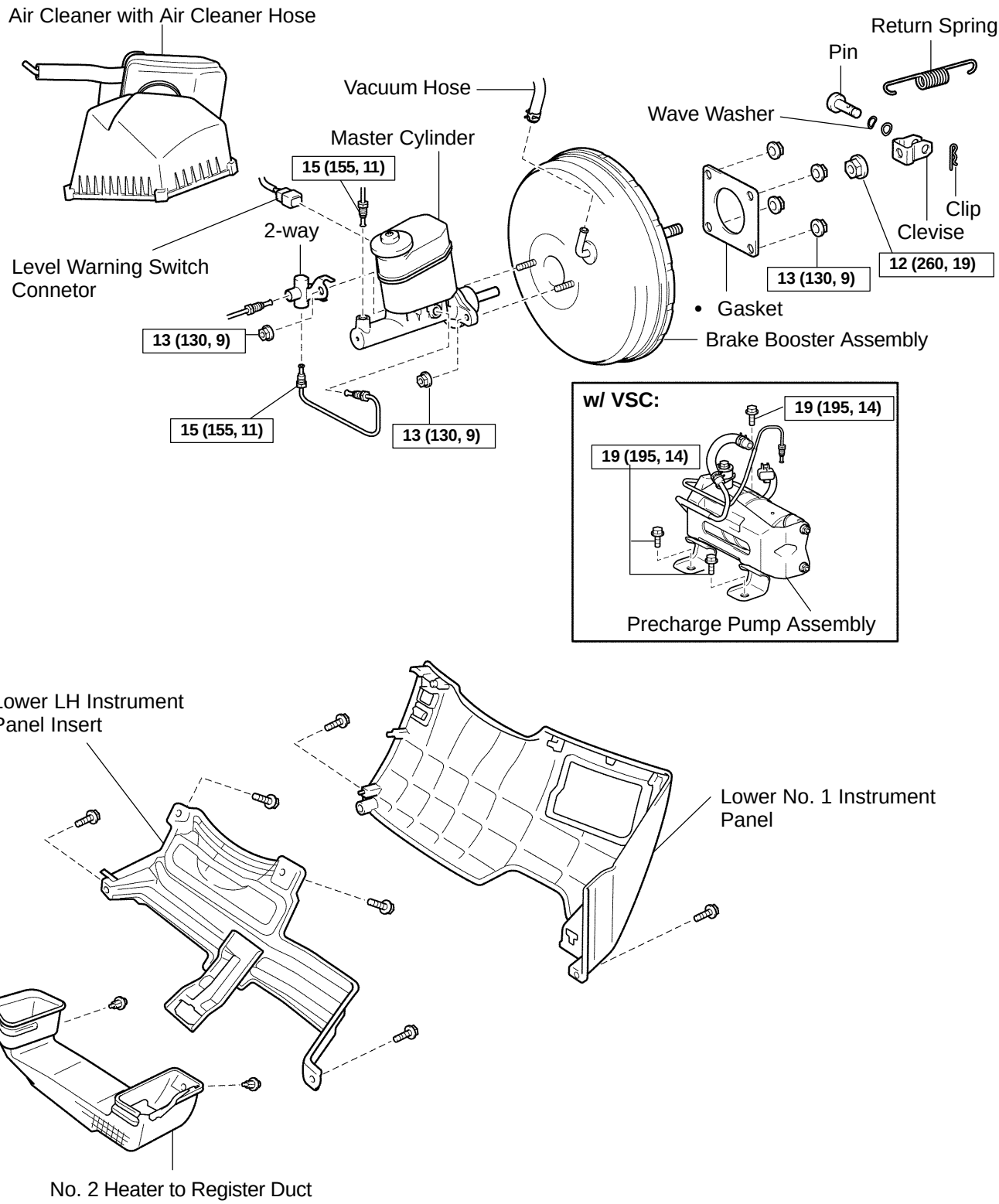

BR152-01

INSTALLATION

1. INSTALL BRAKE BOOSTER

(a) Install the booster and a new gasket.

(b) Install the clevis to the operating rod.

(c) Install and torque the booster installation nuts.
Torque: 13 N·m (130 kgf·cm, 9 ft·lbf)

(d) Install the clevis pin into the clevis and brake pedal, and install the clip to the clevis pin.

(e) Install the pedal return spring.

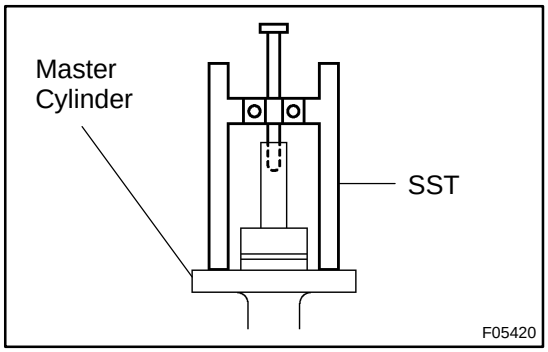

2. ADJUST LENGTH OF BOOSTER PUSH ROD

(a) Set the SST on the master cylinder, and lower the pin until its tip slightly touches the piston.
SST 09737-0001 1

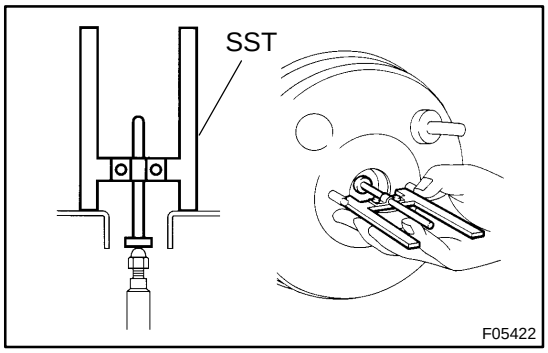

(b) Turn the SST upside down, and set it on the booster.
SST 09737-0001 1

(c) Measure the clearance between the booster push rod and pin head (SST).
Clearance: 0 mm (0 in.)

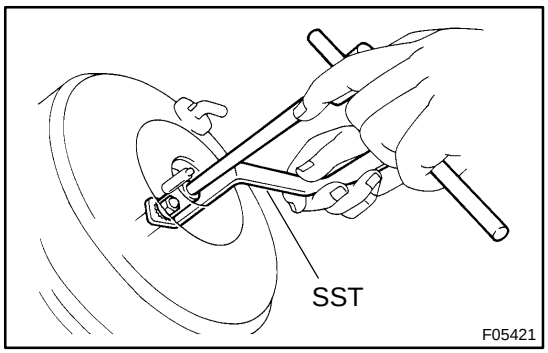

(d) Using SST, adjust the booster push rod length until the push rod lightly touches the pin head.
SST 09737-00020

3. w/ VSC:
INSTALL PRECHARGE PUMP ASSEMBLY (See page BR-58)

4. INSTALL MASTER CYLINDER (See page BR-20)

5. CONNECT VACUUM HOSE TO BRAKE BOOSTER

6. FILL BRAKE RESERVOIR WITH BRAKE FLUID AND BLEED BRAKE SYSTEM (See page BR-4)

7. CHECK FOR LEAKS

8. CHECK AND ADJUST BRAKE PEDAL (See page BR-6)

9. INSTALL NO. 2 HEATER TO REGISTER DUCT, LOWER LH INSTRUMENT PANEL INSERT AND LOWER NO. 1 INSTRUMENT PANEL (See page BO-87)

10. DO OPERATIONAL CHECK (See page BR-21)

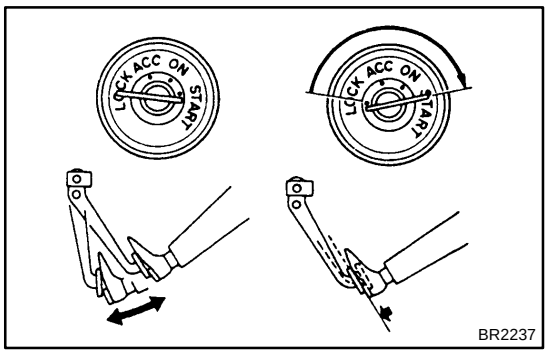

BRAKE BOOSTER ASSEMBLY

BR0KW-04

ON-VEHICLE INSPECTION

1. OPERATING CHECK

(a) Depress the brake pedal several times with the engine off and check that there is no change in the pedal reserve distance.

(b) Depress the brake pedal and start the engine. If the pedal goes down slightly, operation is normal.

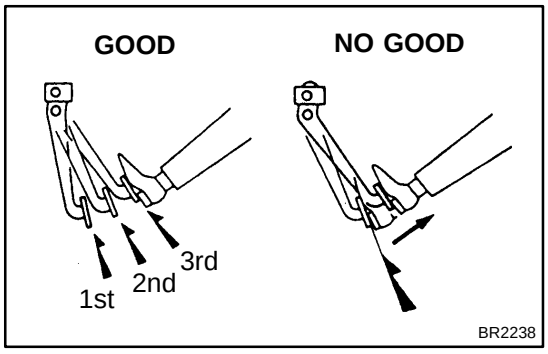

2. AIR TIGHTNESS CHECK

(a) Start the engine and stop it after 1 or 2 minutes. Depress the brake pedal several times slowly.

If the pedal goes down farthest the 1st time, but gradually rises after the 2nd or 3rd time, the booster is air tight.

(b) Depress the brake pedal while the engine is running, and stop the engine with the pedal depressed.

If there is no change in the pedal reverse travel after holding the pedal for 30 seconds, the booster is air tight.

BR0KY-05

REMOVAL

1. **REMOVE AIR CLEANER COVER WITH AIR CLEANER HOSE**
2. **REMOVE MASTER CYLINDER (See page BR-15)**
3. **w/ VSC:**
   REMOVE PRECHARGE PUMP ASSEMBLY (See page BR-57)
4. **DISCONNECT VACUUM HOSE FROM BRAKE BOOSTER**
5. **REMOVE LOWER NO. 1 INSTRUMENT PANEL, LOWER LH INSTRUMENT PANEL INSERT AND NO. 2 HEATER TO REGISTER DUCT (See page BO-87)**

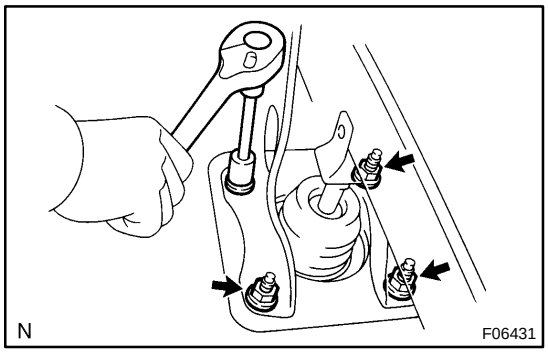

6. **REMOVE BRAKE BOOSTER ASSEMBLY**

(a) Remove the pedal return spring.
(b) Remove the clip and clevis pin.
(c) Remove the 4 nuts and clevis.
(d) Pull out the brake booster and gasket.

BRAKE MASTER CYLINDER

COMPONENTS

BR0KQ-04

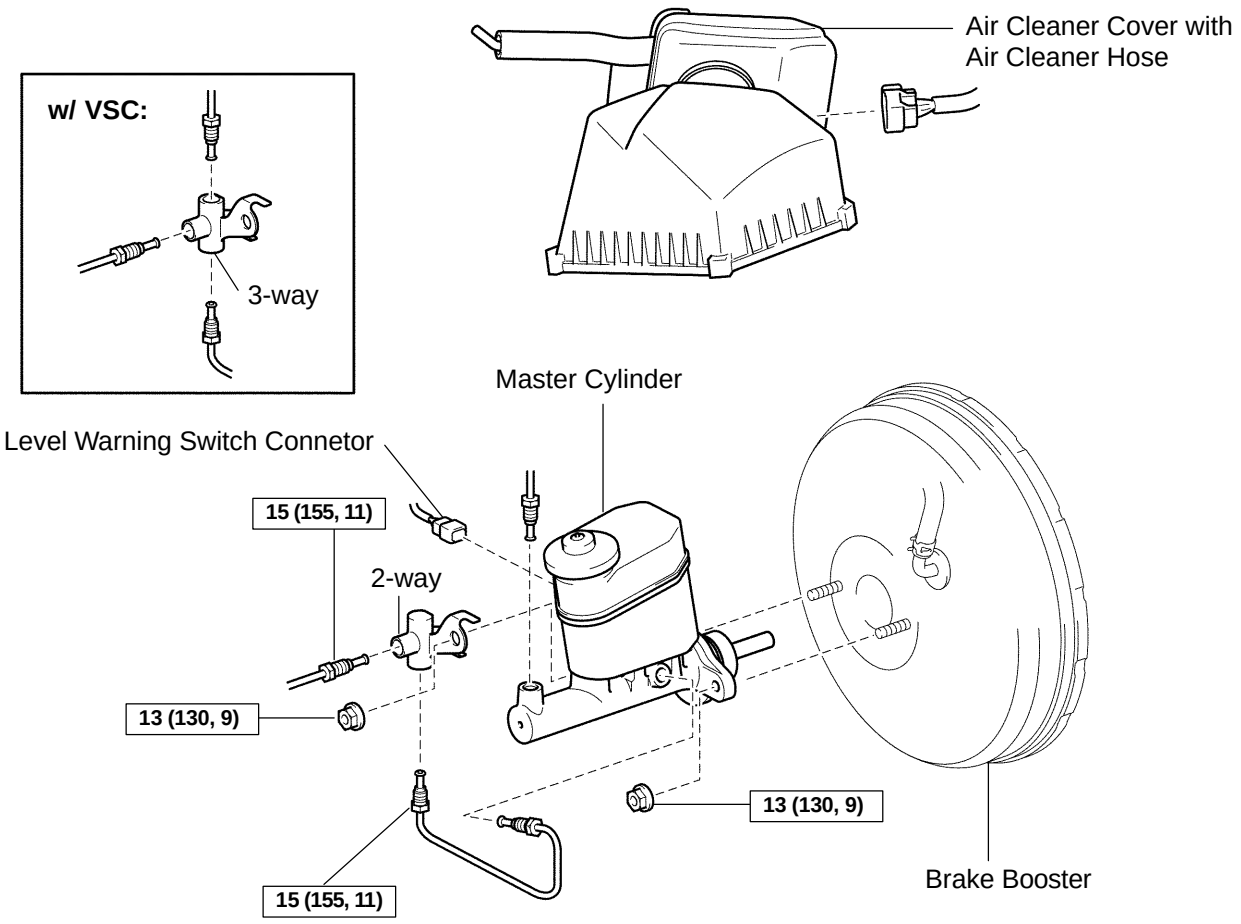

N·m (kgf·cm, ft·lbf) : Specified torque

P

F09712

w/o VSC:

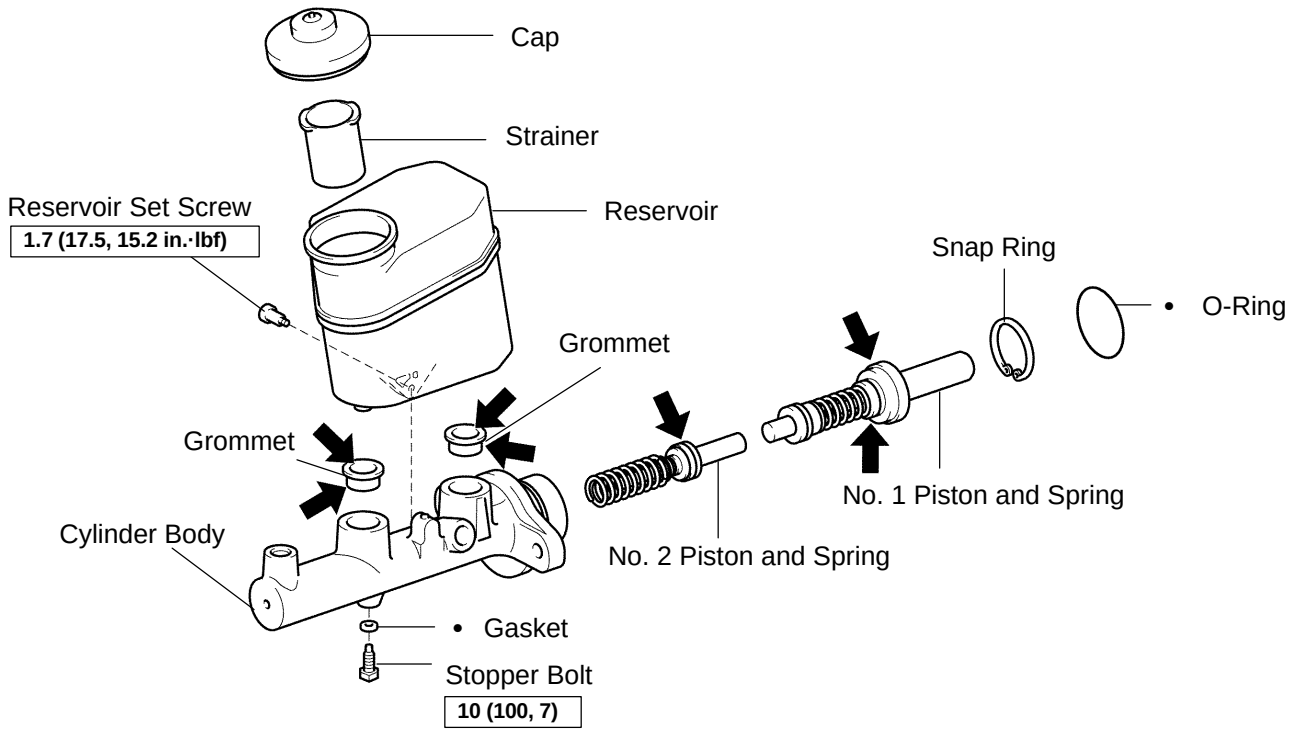

w/ VSC:

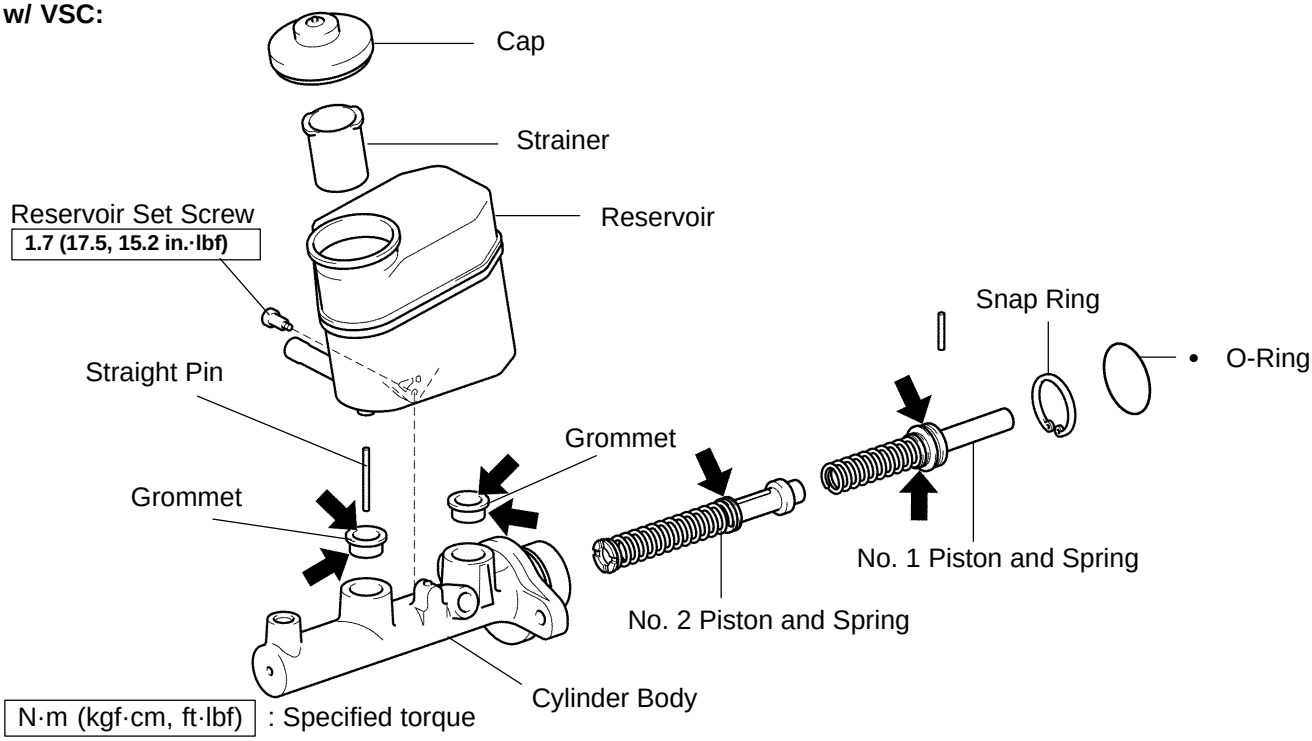

N·m (kgf·cm, ft·lbf) : Specified torque

• Non-reusable part

P ➡ Lithium soap base giycol grease

F09748

BR0KS-03

DISASSEMBLY

1. REMOVE RESERVOIR

(a) Remove the set screw and pull out the reservoir.
Torque: 1.7 N·m (17.5 kgf·cm, 15.2 in.·lbf)

(b) Remove the cap and strainer from the reservoir.

2. REMOVE 2 GROMMETS

3. w/o VSC:
PLACE CYLINDER IN VISE

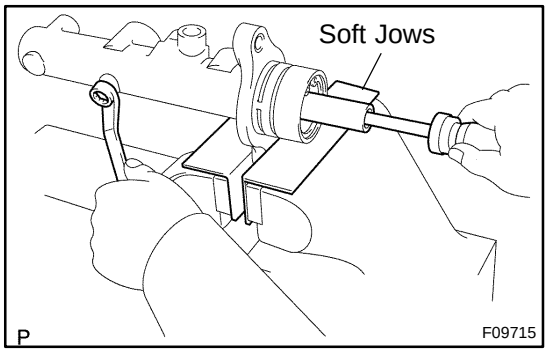

4. w/o VSC:
REMOVE PISTON STOPPER BOLT

Using a screwdriver, push the pistons in all the way and remove the piston stopper bolt and gasket.

HINT:

Tape the screwdriver tip before use.

Torque: 10 N·m (100 kgf·cm, 7 ft·lbf)

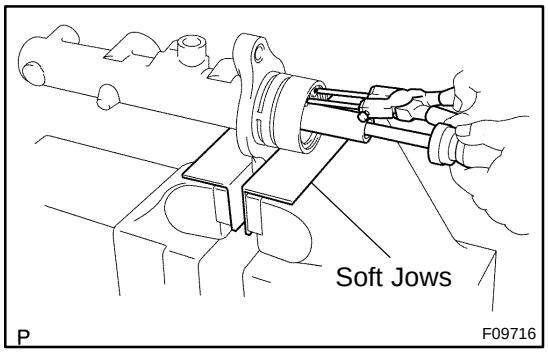

5. w/o VSC:
REMOVE 2 PISTONS AND SPRINGS

(a) Push in the piston with a screwdriver and remove the snap ring with snap ring pliers.

HINT:

Tape the screwdriver tip before use.

(b) Remove the No. 1 piston and spring by hand, pulling straight out, not at an angle.

NOTICE:

- **If pulled out and install at an angle, there is a possibility that the cylinder bore could be damaged.**
- **At the time of reassembly, be careful not to damage the rubber lips on the pistons.**

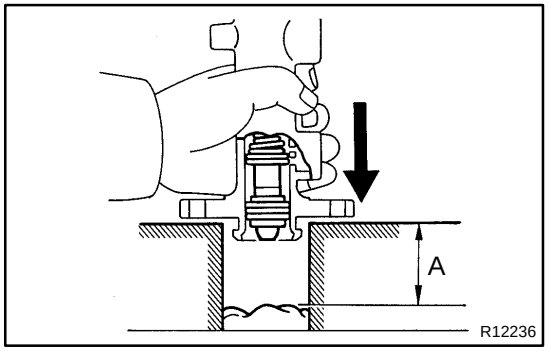

(c) Place a rag and 2 wooden blocks on the work table, and lightly tap the cylinder flange against the block edges until the No. 2 piston drops out of the cylinder.

HINT:

Make sure that the distance (A) from the rag to the top of the blocks is at least 100 mm (3.94 in.).

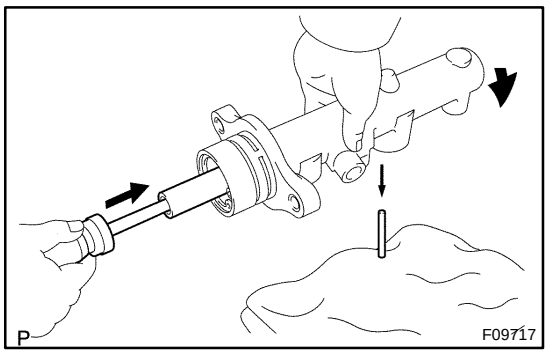

6. w/ VSC:
REMOVE 2 PISTONS AND SPRINGS

(a) Push in the piston with a screwdriver, and remove the straight pin by turning over the cylinder body.

HINT:

Tape the screwdriver tip before use.

(b) Remove the 2 piston and springs by hand, pulling straight out, not at an angle.

NOTICE:

- **If pulled out and installed at an angle, there is a possibly that the cylinder bore could be damaged.**

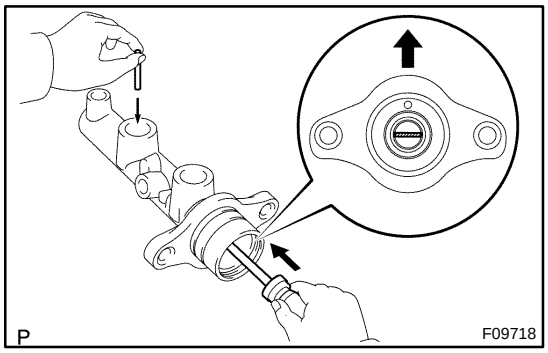

- **At the time of reassembly, be careful not to damage the rubber lips on the pistons.**

HINT:

Insert the No. 2 piston with the groove positioning horizontally.

BR0KT-01

INSPECTION

HINT:

Clean the disassembled parts with compressed air.

1. INSPECT CYLINDER BORE FOR RUST OR SCORING

2. INSPECT CYLINDER FOR WEAR OR DAMAGE

If necessary, clean or replace the cylinder.

BR0KV-05

INSTALLATION

Installation is in the reverse order of removal (See page BR-15).

HINT:

- Before installation, adjust length of brake booster push rod (See page BR-24).
- After installation, fill the brake reservoir with brake fluid, bleed brake system (See page BR-4), and check for leaks.
- Check and adjust brake pedal (See page BR-6).

BR0KU-01

REASSEMBLY

Reassembly is in the reverse order of disassembly (See-page BR-16).

NOTICE:

Apply lithium soap base glycol grease to the rubber parts indicated by the arrows (See page BR-13).

BR0KR-02

REMOVAL

1. REMOVE AIR CLEANER COVER WITH AIR CLEANER HOSE

2. TAKE OUT FLUID WITH SYRINGE

NOTICE:

Do not let brake fluid remain on a painted surface. Wash it off immediately.

3. DISCONNECT LEVEL WARNING SWITCH CONNECTOR

4. w/ VSC:
DISCONNECT RESERVOIR HOSE

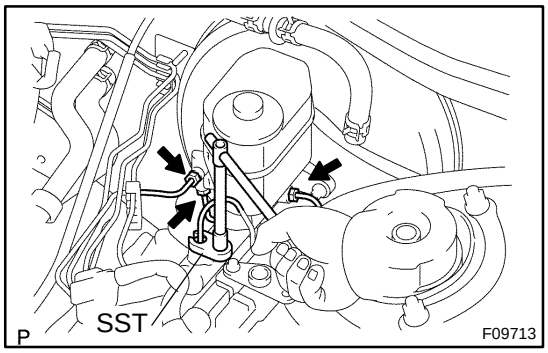

5. DISCONNECT BRAKE LINES

(a) w/o VSC:
Using SST, disconnect the 4 brake lines from the master cylinder and 2-way.
SST 09023-00100
Torque: 15 N·m (155 kgf·cm, 11 ft·lbf)

(b) w/ VSC:
Using SST, disconnect the 5 brake lines from the master cylinder and 3-way.
SST 09023-00100
Torque: 15 N·m (155 kgf·cm, 11 ft·lbf)

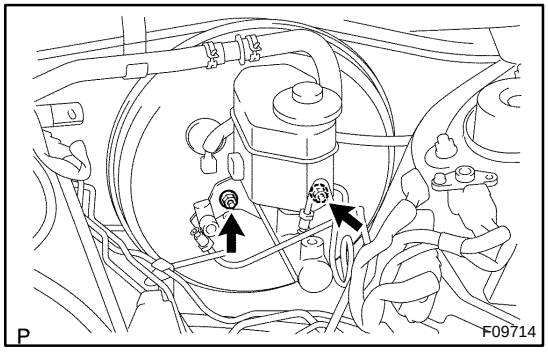

6. REMOVE MASTER CYLINDER

Remove the 2 mounting nuts, and pull out the 2 or 3-way, master cylinder and gasket.
Torque: 13 N·m (130 kgf·cm, 9 ft·lbf)

BRAKE FLUID

BR14Z-01

BLEEDING

HINT:

If any work is done on the brake system or if air in the brake lines is suspected, bleed the air from the system.

NOTICE:

Do not let brake fluid remain on a painted surface. Wash it off immediately.

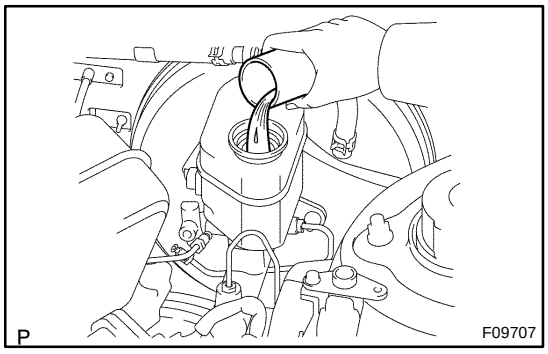

1. FILL BRAKE RESERVOIR WITH BRAKE FLUID

Check the fluid level in the reservoir after bleeding each wheel. Add fluid, if necessary.

Fluid: SAE J1703 or FMVSS No. 116 DOT3

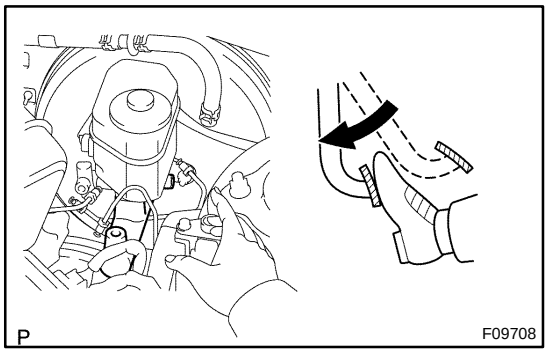

2. BLEED MASTER CYLINDER

HINT:

If the master cylinder has been disassembled or if the reservoir becomes empty, bleed the air from the master cylinder.

(a) Disconnect the brake lines from the master cylinder.
SST 09023-00100

(b) Slowly depress the brake pedal and hold it.

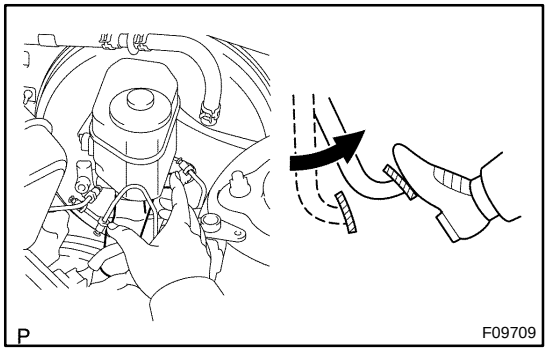

(c) Block off the outlet plugs with your fingers, and release the brake pedal.

(d) Repeat (b) and (c) 3 or 4 times.

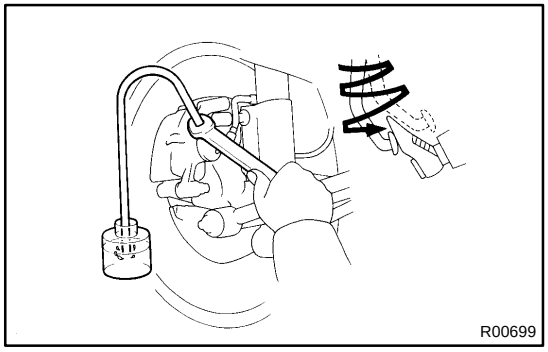

3. CONNECT VINYL TUBE TO BRAKE CALIPER BLEEDER PLUG

Insert other end of the tube in a half-full container of brake fluid.

NOTICE:

Bleed air of the rear brake first. If front brake is bled first, rear brake air cannot be bled.

4. BLEED BRAKE LINE

(a) Slowly depress the brake pedal several times.

(b) While an assistant depresses the pedal, loosen the bleeder plug until fluid starts to run out. Then tighten the bleeder plug.

(c) Repeat this procedure until there are no more air bubbles in the fluid.

Bleeder plug tightening torque:
8.3 N·m (85 kgf·cm, 74 in.·lbf)

5. REPEAT PROCEDURE FOR EACH WHEEL

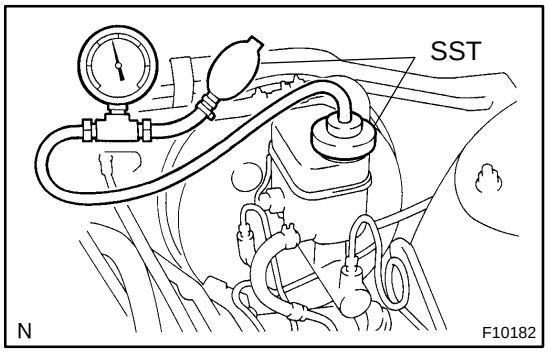

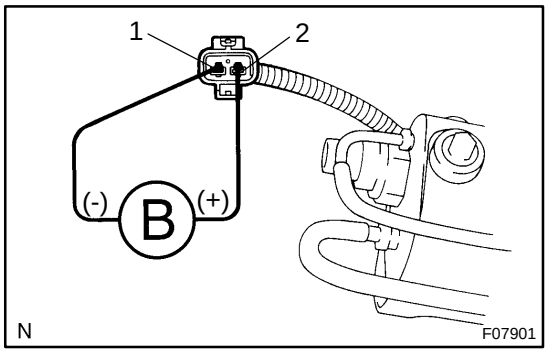

6. w/ VSC:

BLEED PRECHARGE PUMP

CAUTION:

When repairing the brake master cylinder or precharge pump, bleed the precharge pump of the air.

(a) Install the SST to the reservoir.
SST 09992-00242, 09992-00350

(b) Using SST, apply pressure to the reservoir.
Pressure: 98.1 kpa (1.0 kgf/cm^2, 14.2 psi)

(c) Disconnect the precharge pump connector.

(d) Connect ML+ (2) terminal to the battery positive (+) and ML- (1) terminal to the battery negative (-), and activate the precharge pump about 20 seconds.

(e) Remove the SST from the reservoir.

(f) Connect the vinyl tube to the front brake caliper RH, and loosen the bleeder plug.

(g) Activate the precharge pump again until there are no more air bubbles in the fluid.

Bleeder plug tightening torque:
8.3 N·m (85 kgf·cm, 74 in.·lbf)

(h) Connect the precharge pump connector.

7. CHECK FLUID LEVEL IN RESERVOIR

Check the fluid level and add fluid if necessary.

Fluid: SAE J1703 or FMVSS No. 116 DOT3

BR150-01

COMPONENTS

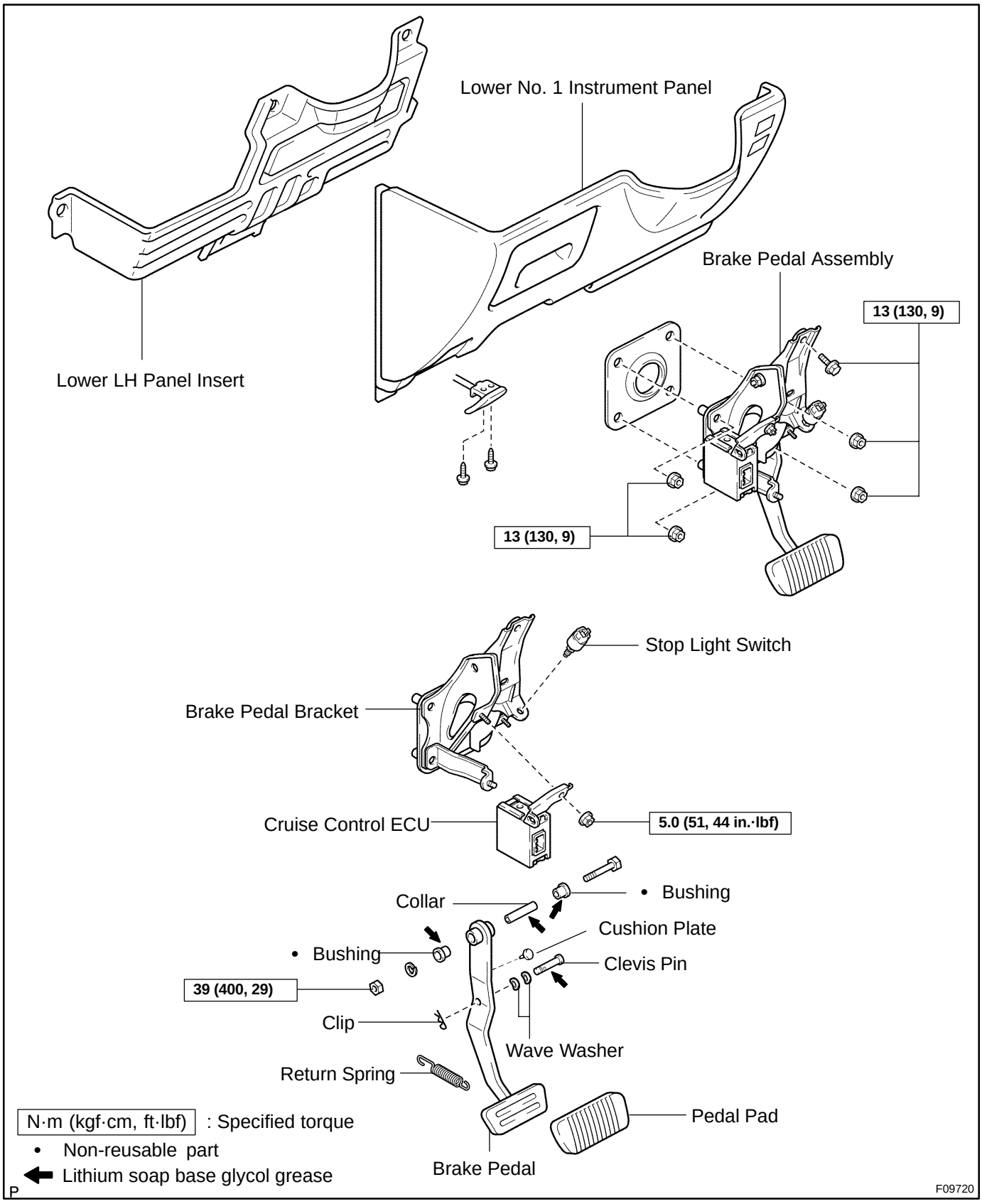

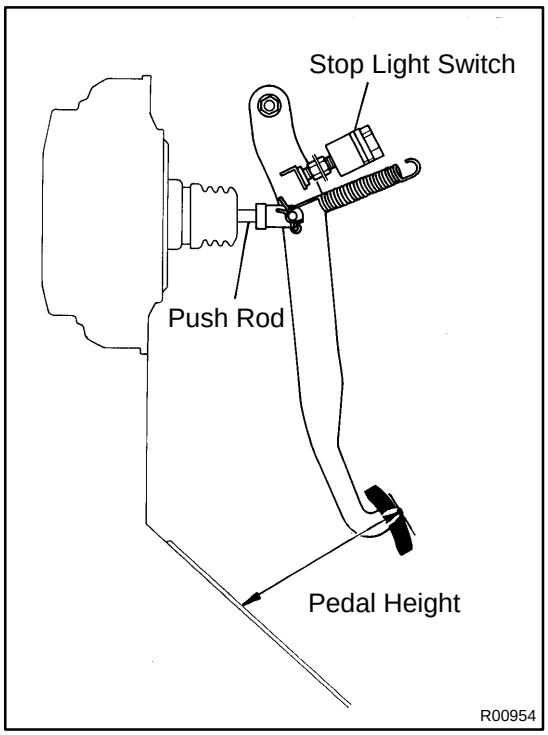

BRAKE PEDAL

BR0KI-04

ON-VEHICLE INSPECTION

1. CHECK PEDAL HEIGHT

Pedal height from asphalt sheet:
153.3 - 163.3 mm (6.035 - 6.429 in.)

If the pedal height is incorrect, adjust it.

2. IF NECESSARY, ADJUST PEDAL HEIGHT

(a) Remove the lower No. 1 instrument panel and lower LH instrument panel insert (See page BO-87).

(b) Disconnect the connector from the stop light switch.

(c) Loosen the stop light switch lock nut and remove the stop light switch.

(d) Loosen the push rod lock nut.

(e) Adjust the pedal height by turning the pedal push rod.

(f) Tighten the push rod lock nut.

Torque: 25 N·m (260 kgf·cm, 19 ft·lbf)

(g) Install the stop light switch.

(h) Connect the connector to the stop light switch.

(i) Push the brake pedal in 5 - 15 mm (0.20 - 0.59 in.), turn the stop light switch to lock the nut in the position where the stop light goes off.

(j) After installation, push the brake pedal in 5 - 15 mm (0.20 - 0.59 in.), check that stop light lights up.

(k) After adjusting the pedal height, check the pedal freeplay.

(l) Install the lower LH instrument panel insert and lower No. 1 instrument panel (See page BO-87).

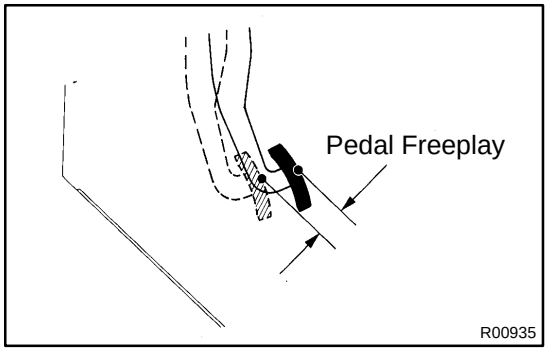

3. CHECK PEDAL FREEPLAY

(a) Stop the engine and depress the brake pedal several times until there is no more vacuum left in the booster.

(b) Push in the pedal by hand until the beginning of the resistance is felt, then measure the distance.

Pedal freeplay: 1 - 6 mm (0.04 - 0.24 in.)

If incorrect, check the stop light switch clearance. If the clearance is OK, then troubleshoot the brake system.

Stop light switch clearance:
0.5 - 2.4 mm (0.020 - 0.094 in.)

HINT:

The freeplay to the 1st resistance is due to the play between the clevis and pin. This is magnified up to 1 - 6 mm (0.04 - 0.24 in.) at the pedal.

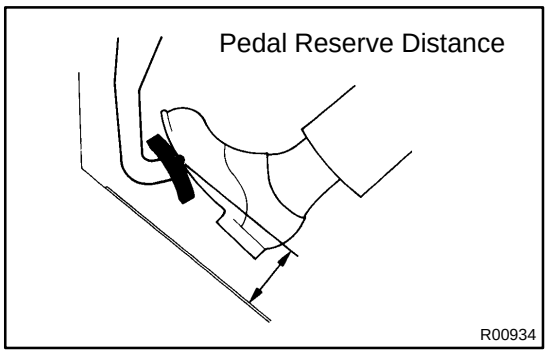

4. CHECK PEDAL RESERVE DISTANCE

Release the parking brake.

With the engine running, depress the pedal and measure the pedal reserve distance, as shown.

Pedal reserve distance from asphalt sheet at 490 N (50 kgf, 110.2 lbf): More than 75 mm (3.0 in.)

If the reserve distance is incorrect, troubleshoot the brake system.

BRAKE SYSTEM

BR0MH-01

PRECAUTION

- **Care must be taken to replace each part properly as it could affect the performance of the brake system and result in a driving hazard. Replace the parts with parts of the same part number or equivalent.**
- **It is very important to keep parts and the area clean when repairing the brake system.**
- **If the vehicle is equipped with a mobile communication system, refer to the precaution in the IN section.**

FRONT BRAKE CALIPER

BR0L2-04

COMPONENTS

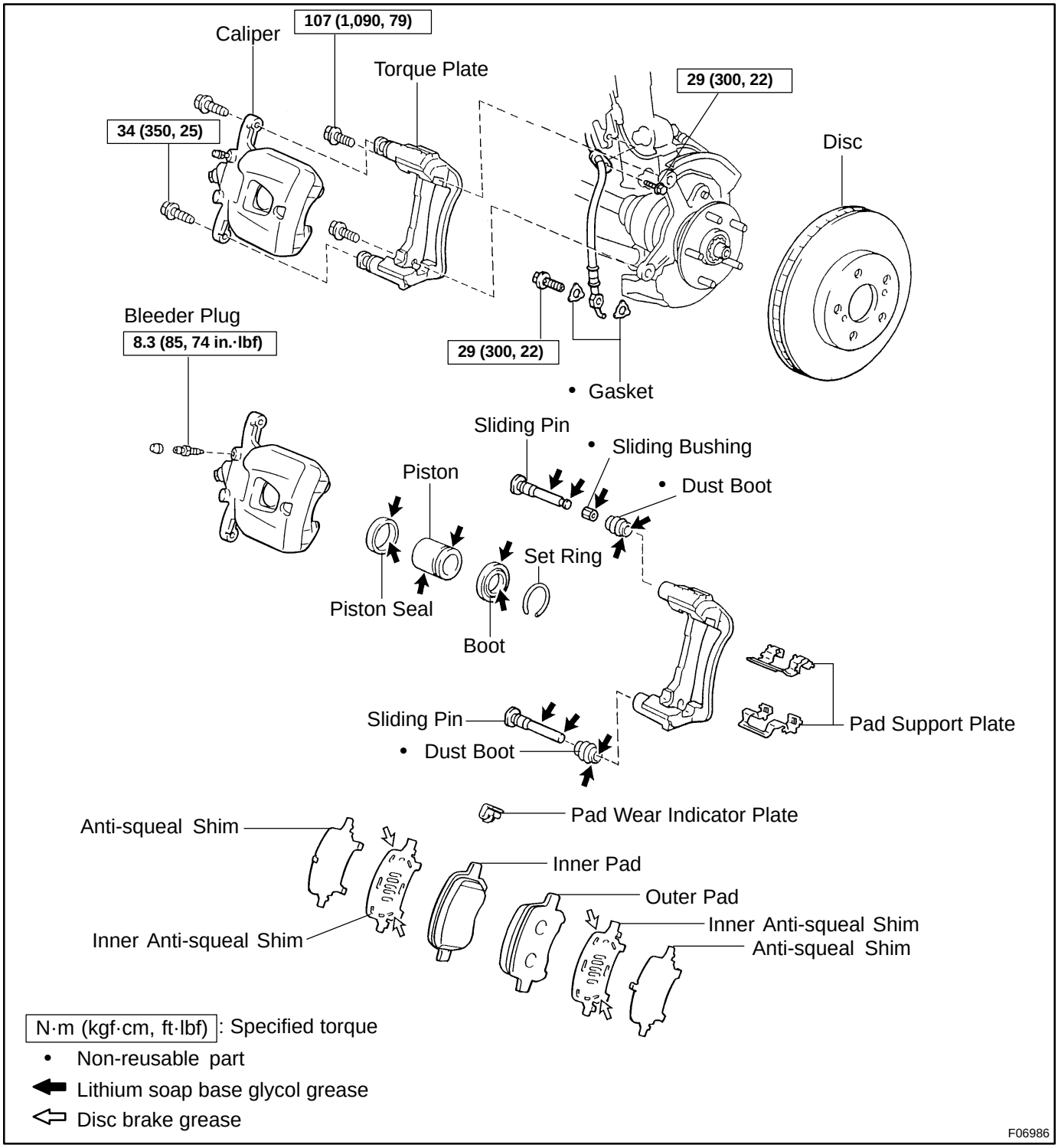

BR0L4-04

DISASSEMBLY

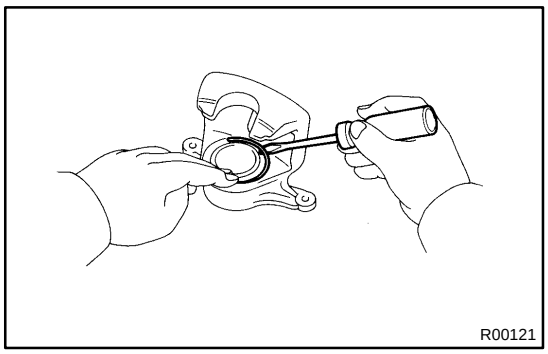

1. REMOVE SET RING AND CYLINDER BOOT

Using a screwdriver, remove the set ring and cylinder boot from the caliper.

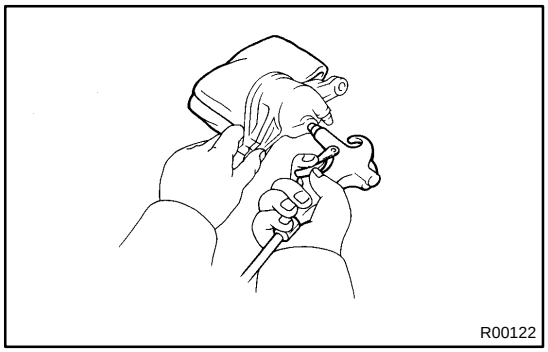

2. REMOVE PISTON

(a) Place a piece of cloth or similar, between the piston and the caliper.

(b) Use compressed air to remove the piston from the cylinder.

CAUTION:

Do not place your fingers in front of the piston when using compressed air.

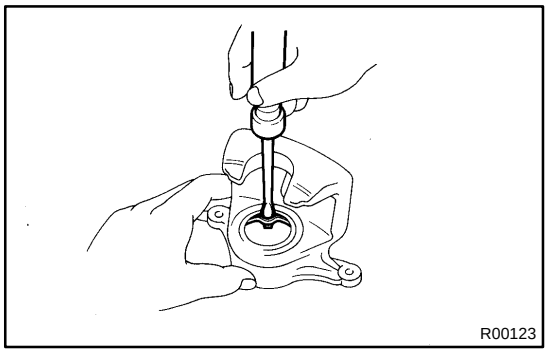

3. REMOVE PISTON SEAL

Using a screwdriver, remove the piston seals from the cylinder.

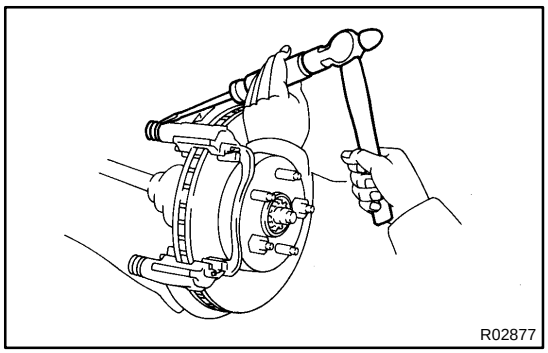

4. REMOVE SLIDING PINS AND DUST BOOTS

(a) Remove the 2 sliding pins from the torque plate.

NOTICE:

At the time of reassembly, insert the sliding pin with sliding bushing into the top side.

(b) Using a screwdriver and hammer, tap out the 2 dust boots.

HINT:

At the time of reaseembly, use a 24 mm socket wrench and tap in 2 new dust boots into the torque plate.

NOTICE:

At the time of reassembly, confirm that the metal plate portion of the dust boot fits snugly in the torque plate.

BR0L5-04

INSPECTION

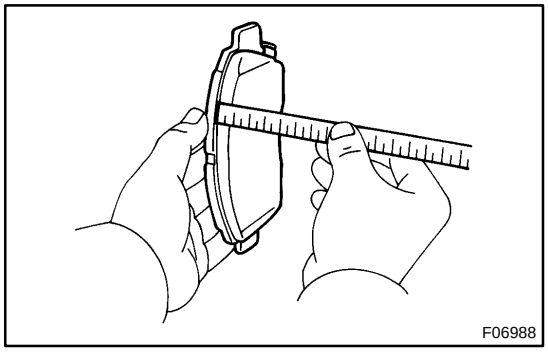

1. MEASURE PAD LINING THICKNESS

Using a ruler, measure the pad lining thickness.

Standard thickness: 11.0 mm (0.433 in.)

Minimum thickness: 1.0 mm (0.039 in.)

Replace the pad if the pad's thickness is at the minimum thickness or less, or if the pad has severe, uneven wear.

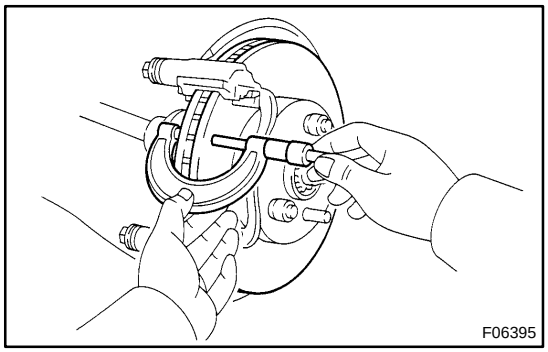

2. MEASURE DISC THICKNESS

Using a micrometer, measure the disc thickness.

Standard thickness: 28.0 mm (1.102 in.)

Minimum thickness: 26.0 mm (1.024 in.)

Replace the disc if the disc's thickness is at the minimum thickness or less. Replace the disc or grind it on a lathe if it is badly scored or worn unevenly.

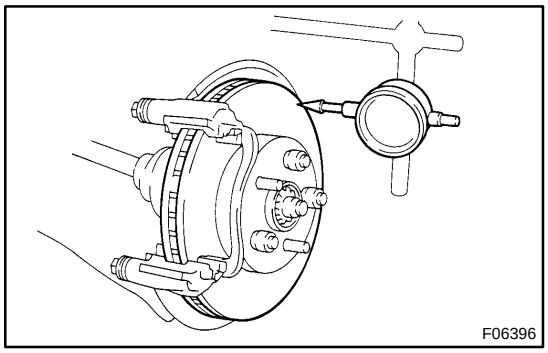

3. MEASURE DISC RUNOUT

Using a dial indicator, measure the disc runout 10 mm (0.39 in.) from the outer edge of the disc.

Maximum disc runout: 0.05 mm (0.0020 in.)

If the disc's runout is at the maximum value or greater, check the bearing play in the axial direction and check the axle hub runout (See page SA-9). If the bearing play and axle hub runout are not abnormal, adjusting the disc runout or grind it on a "On-Car" brake lathe.

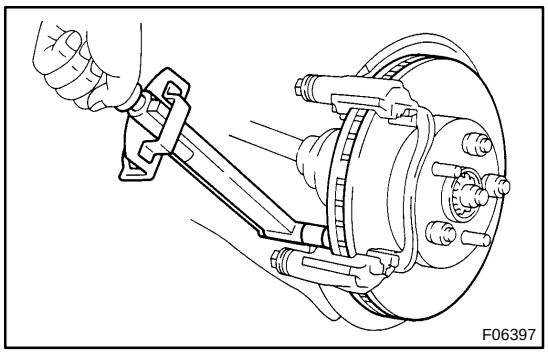

4. IF NECESSARY, ADJUST DISC RUNOUT

(a) Remove the mounting bolts and torque plate from the knuckle.

(b) Remove the hub nuts and the disc. Reinstall the disc 1/5 of a turn round from its original position on the hub. Install and torque the hub nuts.

Torque: 103 N·m (1,050 kgf·cm, 76 ft·lbf)

Remeasure the disc runout. Make a note of the runout and the disc's position on the hub.

(c) Repeat (b) until the disc has been installed on the 3 remaining hub positions.

(d) If the minimum runout recorded in (b) and (c) is less than 0.05 mm (0.0020 in.), install the disc in that position.

(e) If the minimum runout recorded in (b) and (c) is greater than 0.05 mm (0.0020 in.), replace the disc and repeat step 3.

(f) Install the torque plate and torque the mounting bolts.

Torque: 107 N·m (1,090 kgf·cm, 79 ft·lbf)

BR0L7-04

INSTALLATION

Installation is in the reverse order of removal (See page BR-29).

HINT:

- After installation, fill the brake reservoir with brake fluid, bleed brake system (See page BR-4).
- Check for fluid leaks.

BR0L6-01

REASSEMBLY

Reassembly is in the reverse order of disassembly (See page BR-30).

NOTICE:

Apply lithium soap base glycol grease to the parts indicated by arrows (See page BR-28).

BR0L3-04

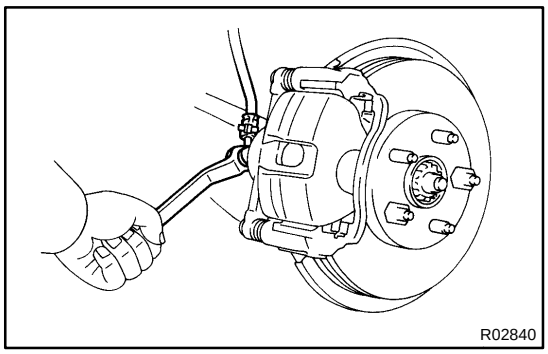

REMOVAL

1. REMOVE FRONT WHEEL

Remove the wheel and temporarily fasten the disc with hub nuts.

Torque: 103 N·m (1,050 kgf·cm, 76 ft·lbf)

2. DISCONNECT FLEXIBLE HOSE

(a) Remove the union bolt and 2 gaskets from the caliper, then disconnect the flexible hose from the caliper.

Torque: 29 N·m (300 kgf·cm, 22 ft·lbf)

HINT:

At the time of installation, install the flexible hose lock securely in the lock hole in the caliper.

(b) Use a container to catch the brake fluid as it drains out.

3. REMOVE CALIPER

(a) Remove the 2 installation bolts.

Torque: 34 N·m (350 kgf·cm, 25 ft·lbf)

(b) Remove the caliper from the torque plate.

4. REMOVE 2 BRAKE PADS WITH ANTI- SQUEAL SHIMS

5. REMOVE 2 PAD SUPPORT PLATES

FRONT BRAKE PAD

BR0L0-04

COMPONENTS

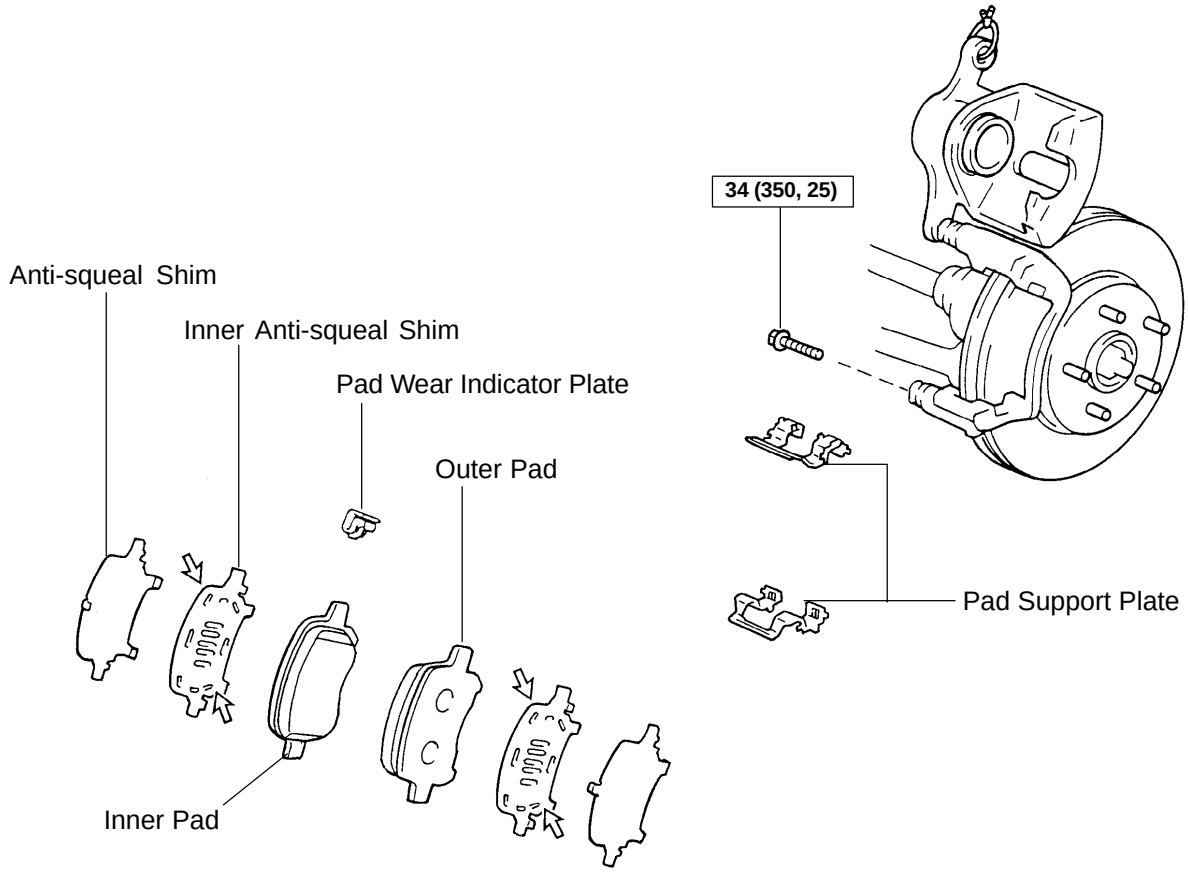

N·m (kgf·cm, ft·lbf) : Specified torque

⇦ Disc brake grease

F06983

BR0L1-04

REPLACEMENT

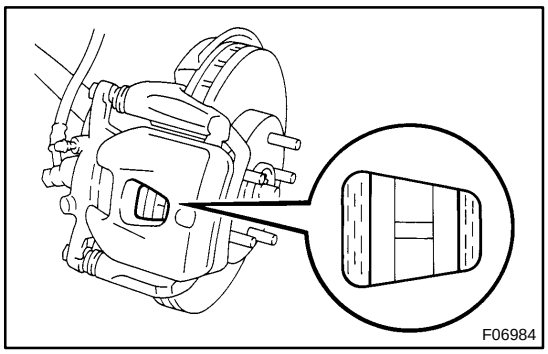

1. REMOVE FRONT WHEEL

2. INSPECT PAD LINING THICKNESS

Check the pad thickness through the caliper inspection hole and replace the pads if it is not within the specification.

Minimum thickness: 1.0 mm (0.039 in.)

3. LIFT UP CALIPER

(a) Remove the bolt and flexible hose from the shock absorber bracket.

(b) Remove the bottom side installation bolt.

(c) Lift up the caliper and suspend it securely.

HINT:

Do not disconnect the flexible hose from the caliper.

4. REMOVE 2 BRAKE PADS WITH 4 ANTI- SQUEAL SHIMS

5. REMOVE PAD WEAR INDICATOR PLATE

6. REMOVE 2 PAD SUPPORT PLATES

NOTICE:

The support plates can be used again provided that they have sufficient rebound, no deformation, cracks or wear, and have had all rust, dirt and foreign particles cleaned off.

7. CHECK DISC THICKNESS AND RUNOUT (See page BR-31)

8. INSTALL 2 PAD SUPPORT PLATES

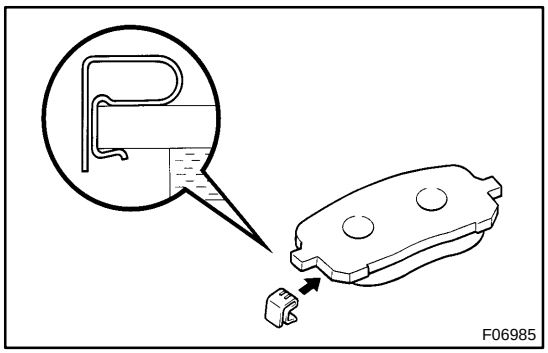

9. INSTALL NEW PADS

NOTICE:

When replacing worn pads, the anti-squeal shims and wear indicator plates must be replaced together with the pads.

(a) Install a pad wear indicator plate on the inner pad.

(b) Apply disc brake grease to both sides of the inner anti-squeal shims (See page BR-25).

(c) Install the 2 anti-squeal shims on each pad.

(d) Install inner pad with the pad wear indicator plate facing upward.

(e) Install outer pad.

NOTICE:

There should be no oil or grease adhering to the friction surfaces of the pads or the disc.

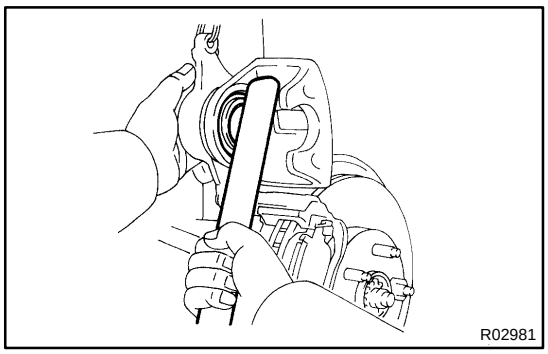

10. INSTALL CALIPER

(a) Draw out a small amount of brake fluid from the reservoir.

(b) Press in the piston with a hammer handle or similar implement.

HINT:

If the piston is difficult to push in, loosen the bleeder plug and push in the piston while letting some brake fluid escape.

(c) Install the caliper.

(d) Hold the sliding pin and torque the installation bolt.
Torque: 34 N·m (350 kgf·cm, 25 ft·lbf)

(e) Install the flexible hose and bolt to the shock absorber bracket.
Torque: 29 N·m (300 kgf·cm, 21 ft·lbf)

11. INSTALL FRONT WHEEL
Torque: 103 N·m (1,050 kgf·cm, 76 ft·lbf)

12. DEPRESS BRAKE PEDAL SEVERAL TIMES

13. CHECK THAT FLUID LEVEL IS AT MAX LINE

FRONT SPEED SENSOR

COMPONENTS

BR0LU-02

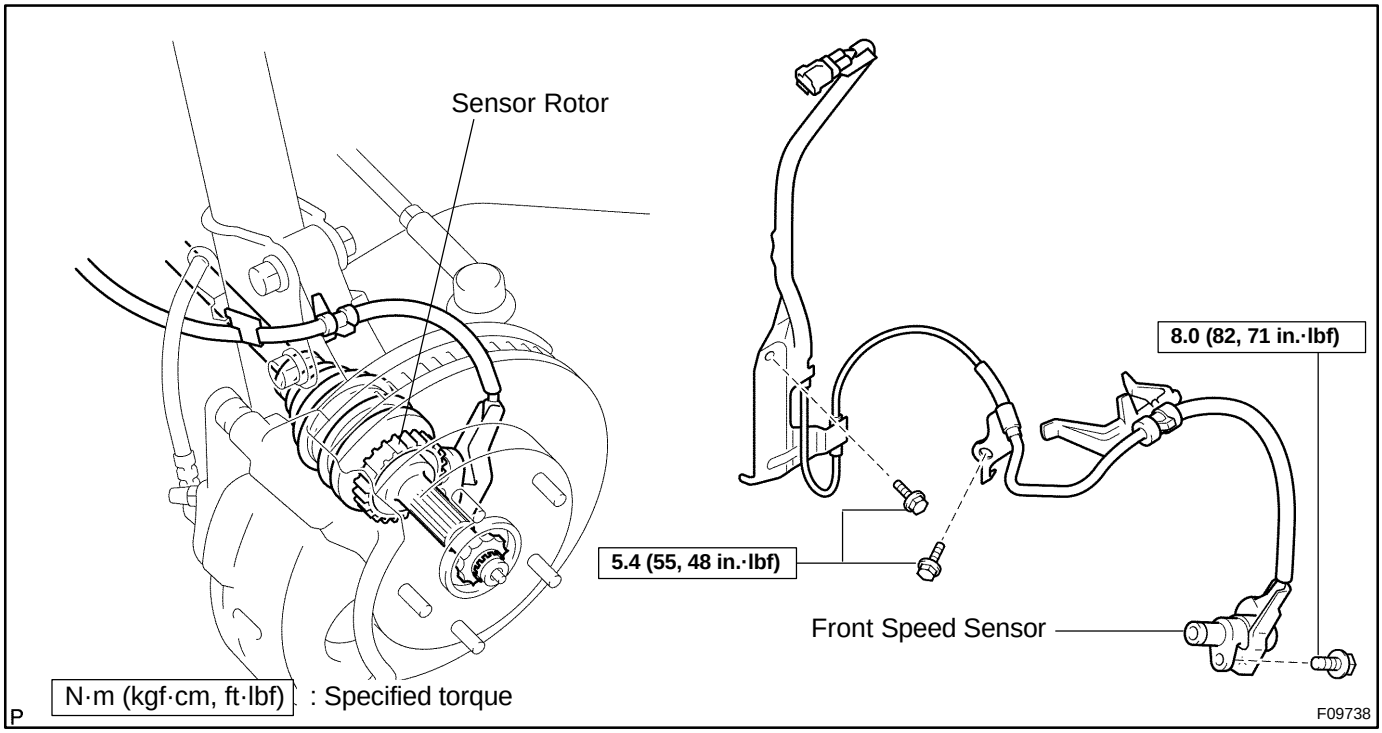

BR0LW-03

INSTALLATION

Installation is in the reverse order of removal (See page BR-60).

AFTER INSTALLATION, CHECK SPEED SENSOR SIGNAL (See page DI-252 or DI-212)

BR0LV-03

REMOVAL

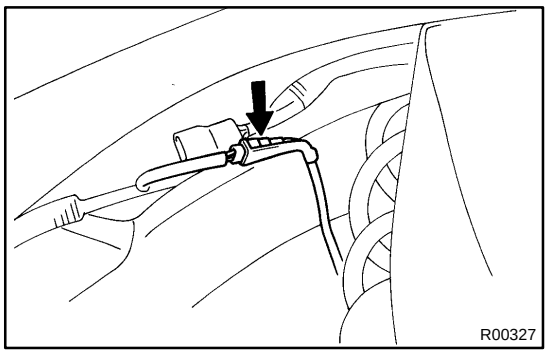

1. DISCONNECT SPEED SENSOR CONNECTOR

(a) Remove the fender liner.

(b) Disconnect the speed sensor connector.

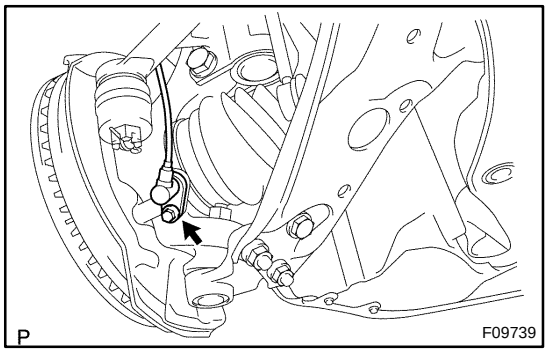

2. REMOVE SPEED SENSOR

(a) Remove the 2 clamp bolts holding the sensor harness to the body and shock absorber.

Torque: 5.4 N·m (55 kgf·cm, 48 in.·lbf)

(b) Remove the bolt and speed sensor from the steering knuckle.

Torque: 8.0 N·m (82 kgf·cm, 71 in.·lbf)

PARKING BRAKE

BR0LG-03

COMPONENTS

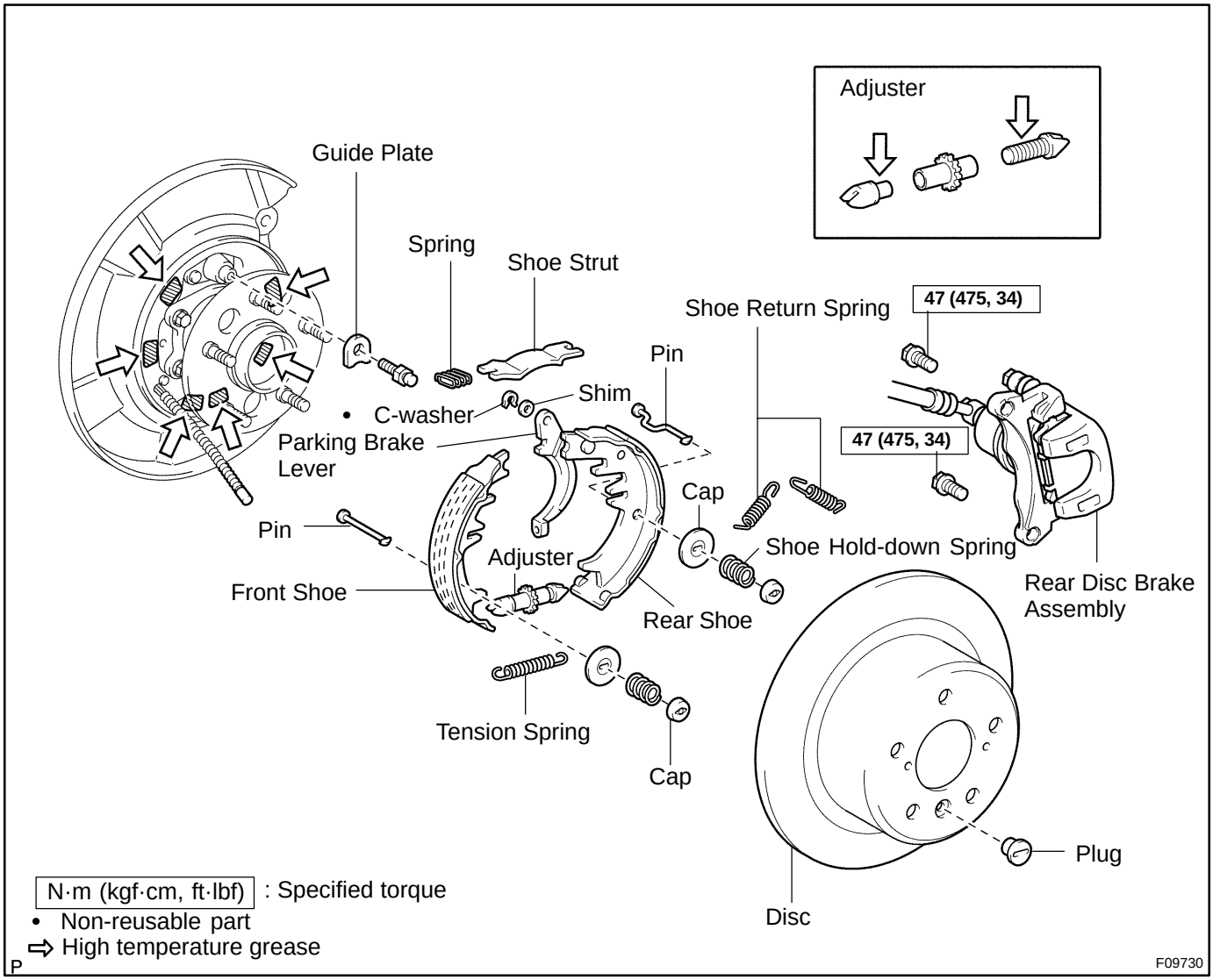

BR0LH-03

DISASSEMBLY

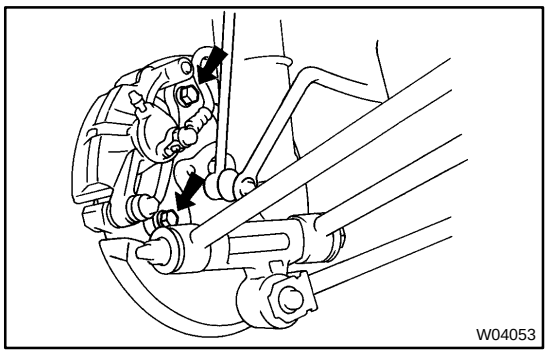

1. REMOVE REAR WHEEL

Torque: 103 N·m (1,050 kgf·cm, 76 ft·lbf)

2. REMOVE REAR DISC BRAKE ASSEMBLY

(a) Remove the 2 mounting bolts and remove the disc brake assembly.

Torque: 47 N·m (475 kgf·cm, 34 ft·lbf)

(b) Suspend the disc brake securely. Ensure that the hose is not stretched.

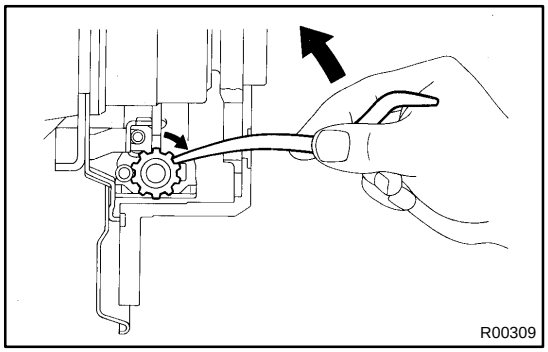

3. REMOVE DISC

Release the parking brake pedal, and remove the disc.

HINT:

If the disc cannot be removed easily, turn the shoe adjuster until the wheel turns freely.

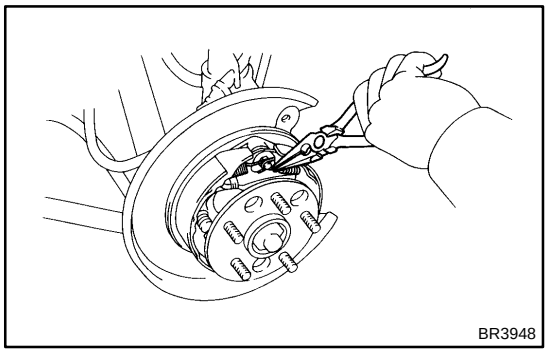

4. REMOVE SHOE RETURN SPRINGS

Using needle-nose pliers, remove the 2 shoe return springs.

5. REMOVE FRONT SHOE, ADJUSTER AND TENSION SPRING

(a) Disconnect the tension spring from the front shoe.

(b) Slide out the front shoe and remove the shoe adjuster.

(c) Remove the shoe strut with the spring.

(d) Remove the shoe hold-down spring, 2 caps and pin.

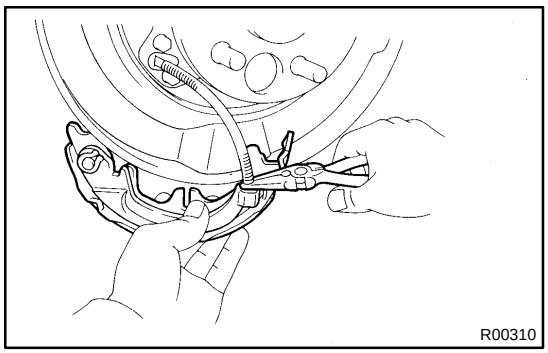

6. REMOVE REAR SHOE

(a) Slide out the rear shoe and remove the tension spring.

(b) Remove the shoe hold-down spring, 2 caps and pin.

(c) Using needle-nose pliers, disconnect the parking brake cable from the parking brake shoe lever.

BR0LI-03

INSPECTION

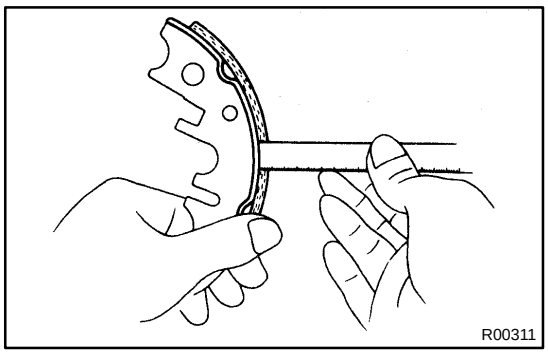

1. INSPECT DISASSEMBLED PARTS

Inspect the disassembled parts for wear, rust or damage.

2. MEASURE BRAKE SHOE LINING THICKNESS

Using a ruler, measure the thickness of the shoe lining.

Standard thickness: 2.0 mm (0.079 in.)

Minimum thickness: 1.0 mm (0.039 in.)

If the lining thickness is at the minimum thickness or less, or if there is severe, uneven wear, replace the brake shoe.

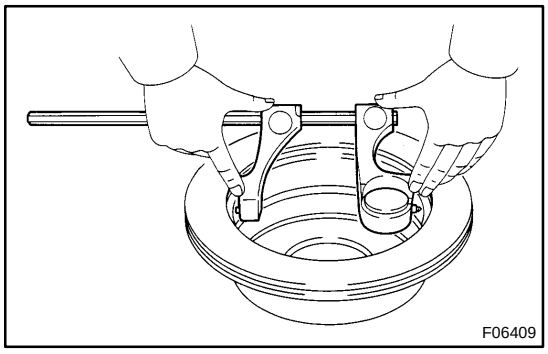

3. MEASURE DISC INSIDE DIAMETER

Using a brake drum gauge or equivalent, measure the inside diameter of the disc.

Standard inside diameter: 170 mm (6.69 in.)

Maximum inside diameter: 171 mm (6.73 in.)

Replace the disc if the inside diameter is at the maximum value or more. Replace the disc or grind it with a lathe if the disc is scored or worn unevenly.

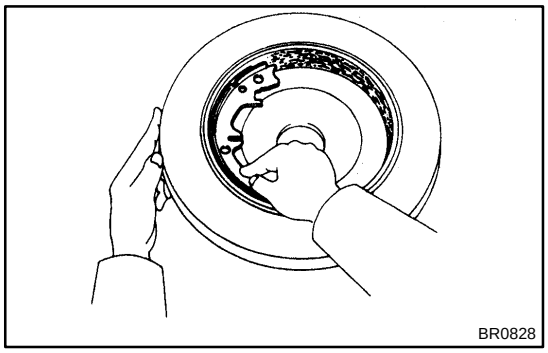

4. INSPECT PARKING BRAKE LINING AND DISC FOR PROPER CONTACT

Apply chalk to the inside surface of the disc, then grind down the brake shoe lining to fit. If the contact between the disc and the brake shoe lining is improper, repair it using a brake shoe grinder or replace the brake shoe assembly.

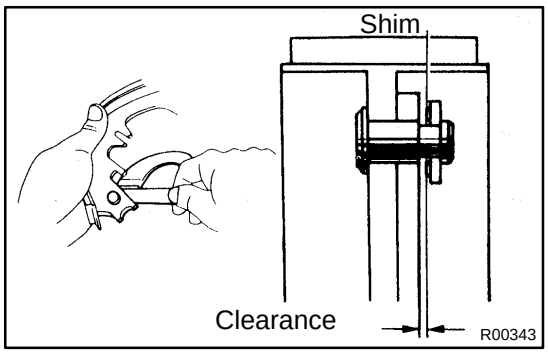

5. MEASURE CLEARANCE BETWEEN PARKING BRAKE SHOE AND LEVER

Using a feeler gauge, measure the clearance.

Standard clearance: Less than 0.35 mm (0.0138 in.)

If the clearance is not within the specification, replace the shim with one of the correct size.

Shim Thickness	Shim Thickness
0.3 mm (0.012 in.)	0.9 mm (0.035 in.)
0.6 mm (0.024 in.)	-

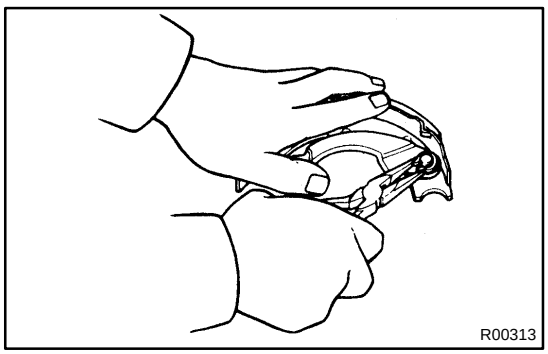

6. IF NECESSARY, REPLACE SHIM

(a) Using a screwdriver, remove the C-washer and shim.
(b) Install the correct size shim with a new C-washer.
(c) Remeasure the clearance.

BR0LJ-03

REASSEMBLY

Reassembly is in the reverse order of disassembly (See page BR-44).

NOTICE:

Apply high temperature grease to the parts indicated by the arrows (See page BR-43).

1. ADJUST PARKING BRAKE SHOE CLEARANCE

(a) Temporarily install the hub nuts.

(b) Remove the hole plug.

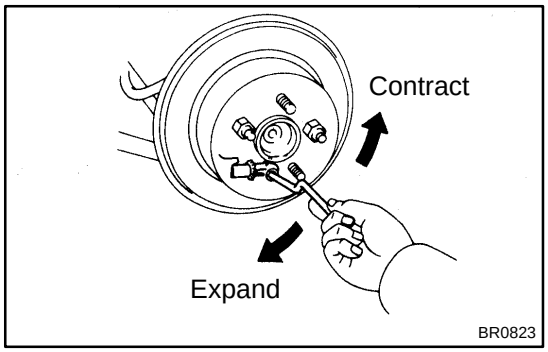

(c) Turn the adjuster and expand the shoes until the disc locks.

(d) Return the adjuster 8 notches.

(e) Install the hole plug.

2. SETTLING PARKING BRAKE SHOES AND DISC

(a) Depress the parking brake pedal with 147 N (15 kgf, 33 lbf).

(b) Drive the vehicle at about 50 km/h (31 mph) on a safe, level and dry road.

(c) Drive the vehicle for about 400 meters (0.25 mile) in this condition.

(d) Repeat this procedure 2 or 3 times.

3. RECHECK AND ADJUST PARKING BRAKE PEDAL TRAVEL (See page BR-9)

BR0KK-03

COMPONENTS

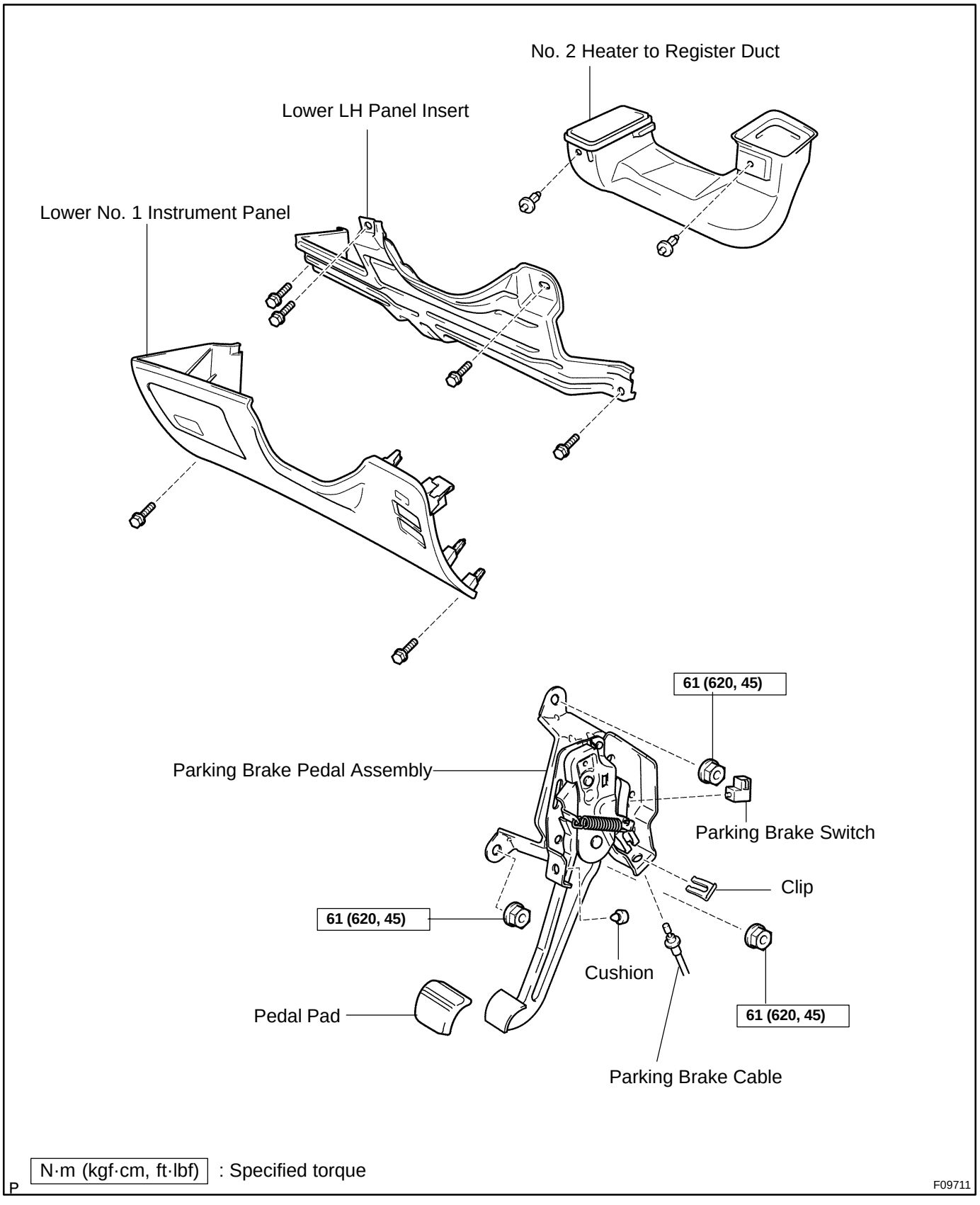

BR0KM-03

INSTALLATION

Installation is in the reverse order of removal (See page BR-11).

AFTER INSTALLATION, ADJUST PARKING BRAKE PEDAL TRAVEL (See page BR-6)

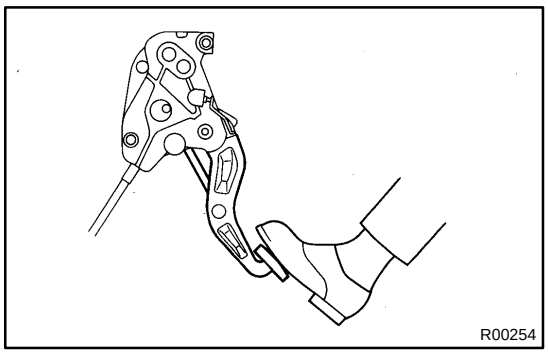
R00254

PARKING BRAKE PEDAL

BR0KJ-02

ON-VEHICLE INSPECTION

1. CHECK PARKING BRAKE PEDAL TRAVEL

Slowly depress the parking brake pedal all the way, and count the number of clicks.

Parking brake pedal travel at 294 N (30 kgf, 66 lbf): 3 - 6 clicks

If incorrect, adjust the parking brake.

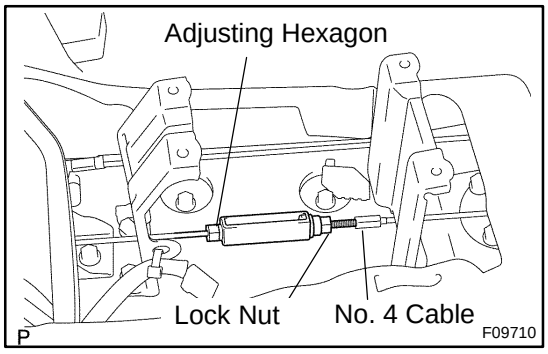

2. IF NECESSARY, ADJUST PARKING BRAKE PEDAL TRAVEL

HINT:

Before adjusting the parking brake, make sure that the rear brake shoe clearance has been adjusted.

For shoe clearance adjustment, see step 1 on page BR-46 .

(a) Floor shift:
Remove the console box.

(b) Column shift:
Remove the hole cover.

(c) Confirm that the parking brake pedal is released.

(d) Hold the screw end of No. 4 cable not to rotate.

(e) Loosen the lock nut.

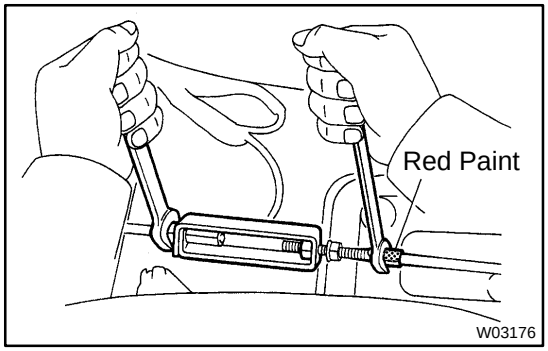

(f) Hold the parking brake cable and turn the adjusting hexagon until the pedal travel is correct.

NOTICE:

To prevent the parking brake cable from twisting, always keep the red-painted surface up.

(g) Holding the adjusting hexagon, tighten the lock nut.
Torque: 5.4 N·m (55 kgf·cm, 48 in.·lbf)

(h) Floor shift:
Install the console box.

(i) Column shift:
Install the hole cover.

BR151-01

REMOVAL

1. **REMOVE LOWER NO. 1 INSTRUMENT PANEL, LOWER LH PANEL INSERT AND NO. 2 HEATER TO REGISTER DUCT (See page BO-87)**
2. **RELEASE PARKING BRAKE PEDAL**

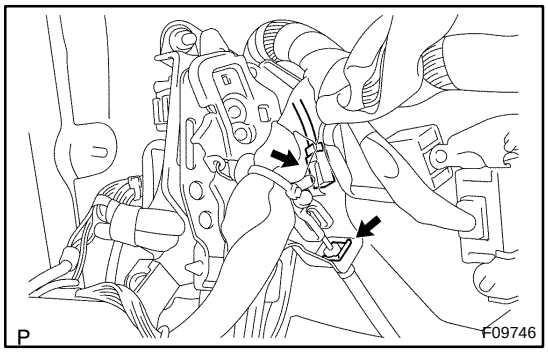

3. **REMOVE PARKING BRAKE PEDAL ASSEMBLY**

(a) Disconnect the parking brake switch connector.

(b) Remove the clip, and disconnect the parking brake cable.

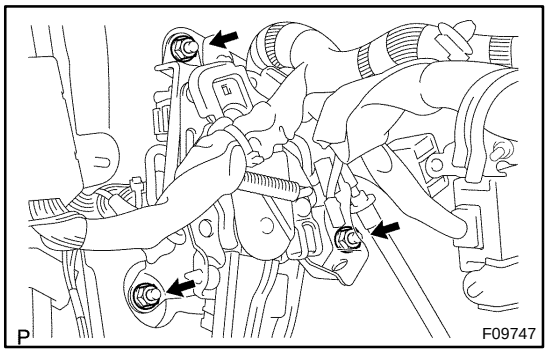

(c) Remove the 3 nuts and parking brake pedal assembly.
Torque: 61 N·m (620 kgf·cm, 45 ft·lbf)

(d) Remove the parking brake switch and cushion from the parking brake pedal assembly.

PRECHARGE PUMP

COMPONENTS

BR159-01

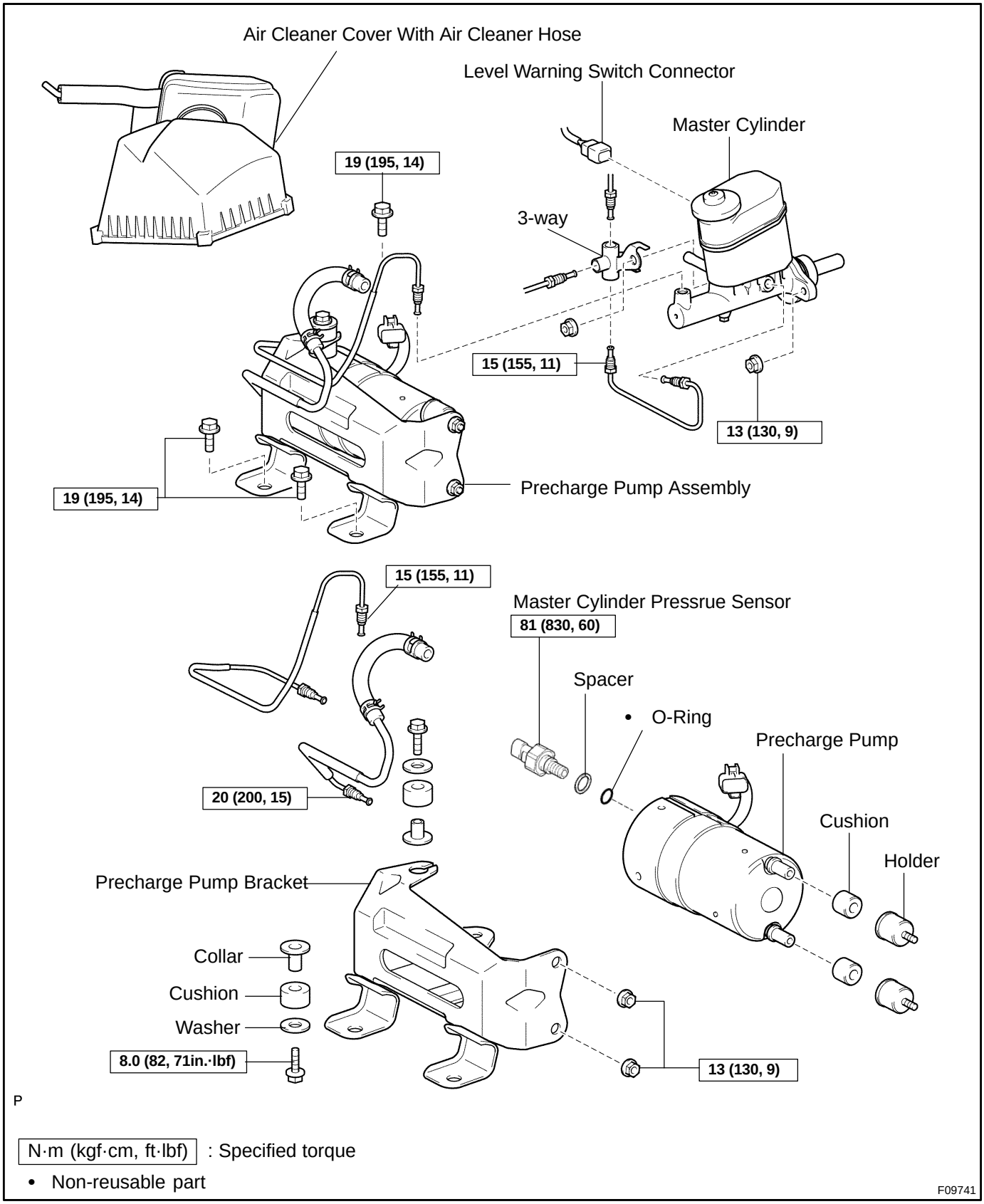

BR15B-01

INSTALLATION

Installation is in the reverse order of removal (See page BR-57).

HINT:

- After installation, fill the brake reservoir with brake fluid, bleed brake system (See page BR-4).
- Check for fluid leaks.

BR15A-01

REMOVAL

1. **REMOVE AIR CLEANER CASE WITH AIR CLEANER HOSE**
2. **REMOVE MASTER CYLINDER (See page BR-15)**
3. **DISCONNECT PRECHARGE PUMP CONNECTOR**

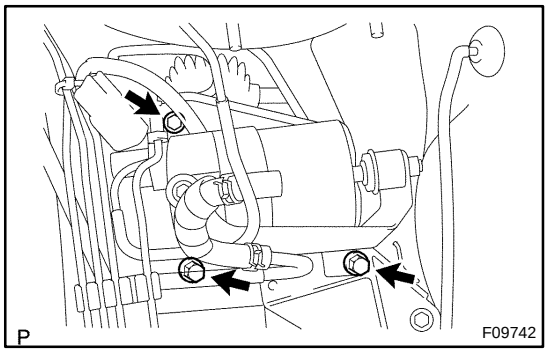

4. **REMOVE PRECHARGE PUMP ASSEMBLY**

(a) Remove the 3 bolts and precharge pump assembly.
Torque: 19 N·m (195 kgf·cm, 14 ft·lbf)

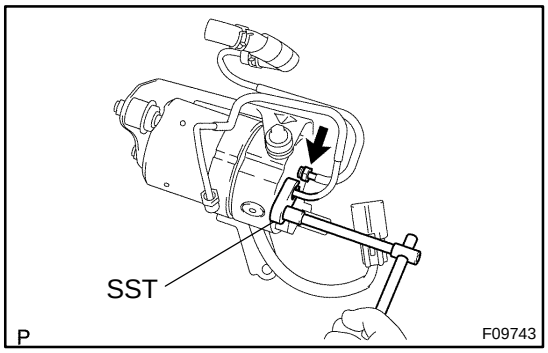

(b) Using SST, disconnect the 2 brake lines from the precharge pump.
SST 09751-3601 1
Torque:
10 mm nut: 15 N·m (155 kgf·cm, 11 ft·lbf)
12 mm nut: 20 N·m (200 kgf·cm, 15 ft·lbf)

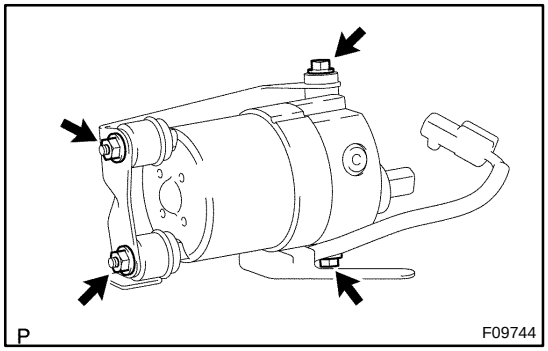

5. **REMOVE PRECHARGE PUMP**

(a) Remove the 2 nuts, 2 bolts and precharge pump from the pump bracket.
Torque:
Nut: 13 N·m (130 kgf·cm, 9 ft·lbf)
Bolt: 8.0 N·m (82 kgf·cm, 71 in.·lbf)

(b) Remove the 2 holders, 2 collars, 2 washers and 4 cushions.

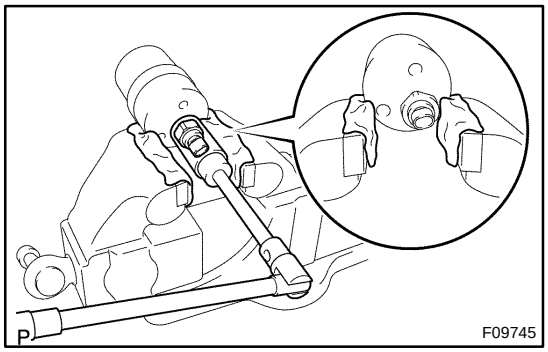

6. **REMOVE MASTER CYLINDER PRESSURE SENSOR**

(a) Place the precharge pump in a vise with a cloth shown in the illustration on the left.

(b) Using 30 mm deeper socket wrench, and remove the master cylinder pressure sensor, O-ring and spacer.
Torque: 81 N·m (830 kgf·cm, 60 ft·lbf)

REAR BRAKE CALIPER

BR0LA-03

COMPONENTS

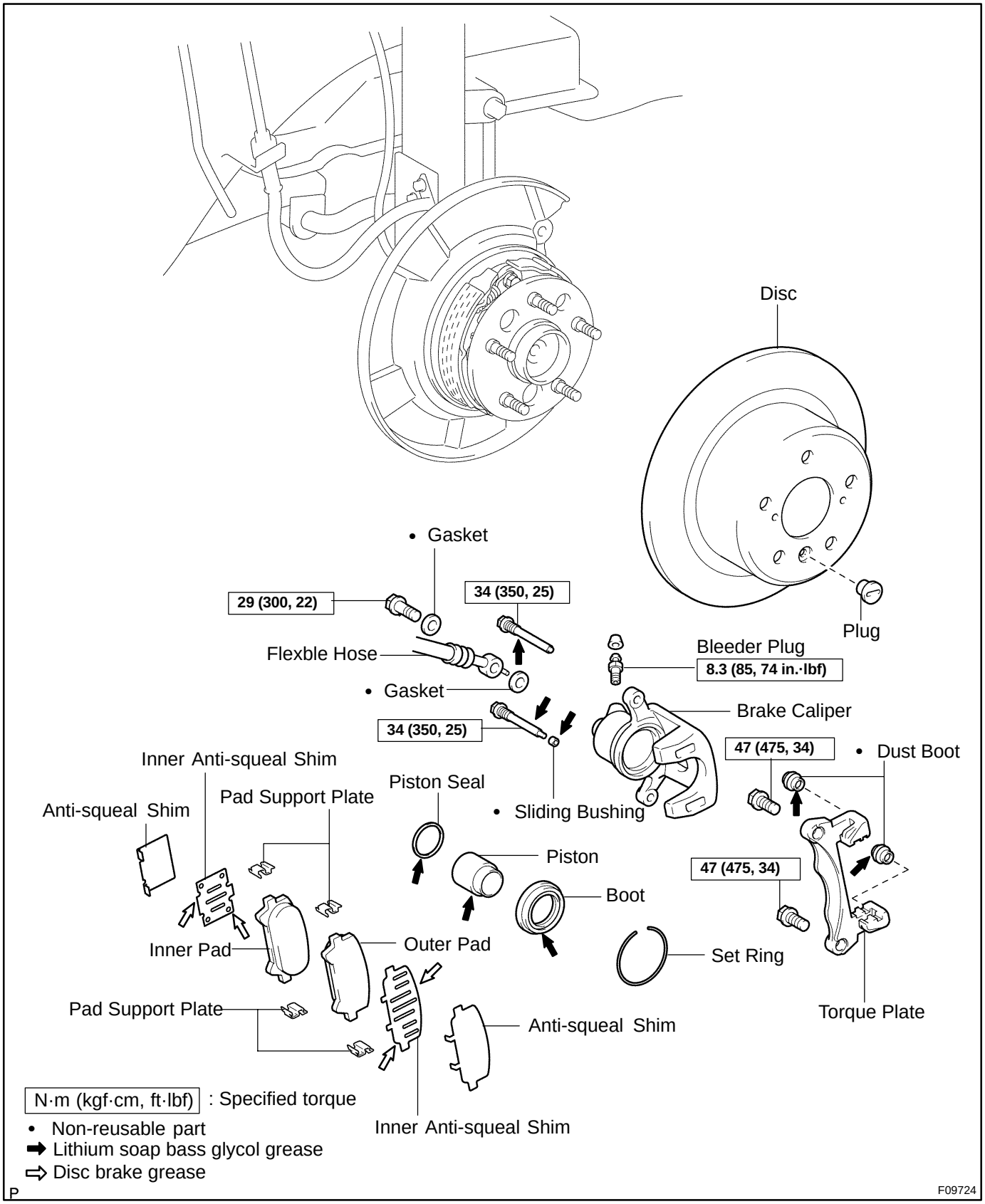

BR153-01

DISASSEMBLY

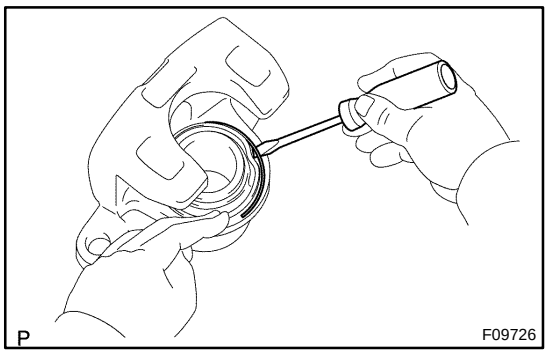

1. REMOVE CYLINDER BOOT SET RING AND CYLINDER BOOT

Using a screwdriver, remove the cylinder boot set ring and cylinder boot from the cylinder.

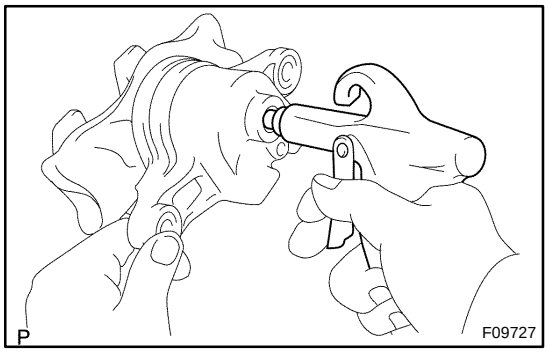

2. REMOVE PISTON

(a) Place a piece of cloth or similar, between the piston and caliper.

(b) Use compressed air to remove the piston from the cylinder.

CAUTION:

Do not place your fingers in front of the piston when using compressed air.

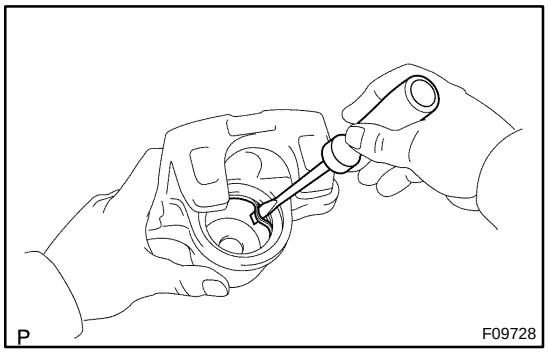

3. REMOVE PISTON SEAL

Using a screwdriver, remove the piston seal from the cylinder.

4. REMOVE 2 DUST BOOTS

BR0LD-03

INSPECTION

1. MEASURE PAD LINING THICKNESS (See page BR-31)

Standard thickness: 10.0 mm (0.394 in.)

Minimum thickness: 1.0 mm (0.039 in.)

2. MEASURE DISC THICKNESS

(See step 2 on page BR-31)

Standard thickness: 12.0 mm (0.472 in.)

Minimum thickness: 10.5 mm (0.413 in.)

3. MEASURE DISC RUNOUT

(See step 3 on page BR-31)

Maximum disc runout: 0.15 mm (0.0059 in.)

If the disc's runout is at the maximum value or greater, check the bearing play in the axial direction and check the axle hub runout (See page SA-45). If the bearing play and axle hub runout are not abnormal, adjusting the disc runout or grind it on a "On-Car" brake lathe.

4. IF NECESSARY, ADJUST DISC RUNOUT

(a) Remove the 2 bolts and torque plate.

(b) Remove the hub nuts and the disc. Reinstall the disc 1/5 of a turn round from its original position on the hub. Install and torque the hub nuts.

Torque: 103 N·m (1050 kgf·cm, 76 ft·lbf)

Remeasure the disc runout. Make a note of the runout and the disc's position on the hub.

(c) Repeat (b) until the disc has been installed on the 3 remaining hub positions.

(d) If the minimum runout recorded in (b) and (c) is less than 0.15 mm (0.0059 in.), install the disc in that position.

(e) If the minimum runout recorded in (b) and (c) is greater than 0.15 mm (0.0059 in.), replace the disc and repeat step 3.

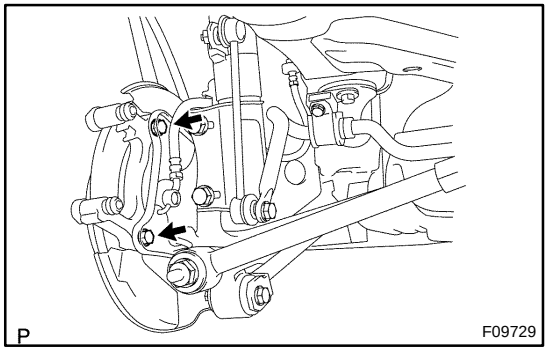

(f) Install the torque plate and torque the mounting bolts.

Torque: 47 N·m (475 kgf·cm, 34 ft·lbf)

BR0LF-03

INSTALLATION

Installation is in the reverse order of removal (See page BR-38).

HINT:

- After installation, fill the brake reservoir with brake fluid, bleed brake system (See page BR-4).
- Check for fluid leaks.

BR0LE-01

REASSEMBLY

Reassembly is in the reverse order of disassembly (See page BR-39).

NOTICE:

Apply lithium soap base glycol grease to the parts indicated by the arrows (See page BR-37).

BR0LB-02

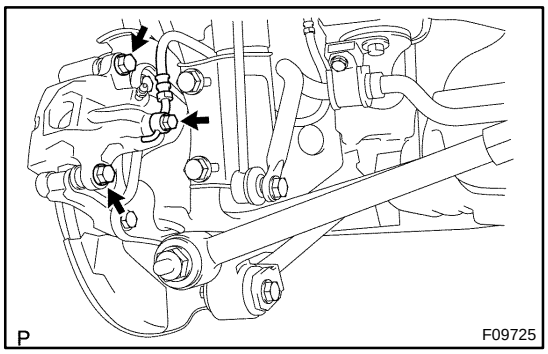

REMOVAL

1. REMOVE REAR WHEEL

Remove the wheel and temporarily fasten the disc with hub nuts.

Torque: 103 N·m (1,050 kgf·cm, 76 ft·lbf)

2. DISCONNECT FLEXIBLE HOSE

(a) Remove the union bolt and 2 gaskets from the caliper, then disconnect the flexible hose from the caliper.

Torque: 29 N·m (300 kgf·cm, 22 ft·lbf)

HINT:

At the time of installation, insert the flexible hose lock securely in the lock hole in the caliper.

(b) Use a container to catch the brake fluid as it drains out.

3. REMOVE CALIPER

(a) Remove the 2 installation bolts.

Torque: 34 N·m (350 kgf·cm, 25 ft·lbf)

NOTICE:

At the time of installation, insert the sliding pin with sliding bushing into the bottom side.

(b) Remove the caliper from the torque plate.

4. REMOVE 2 BRAKE PADS WITH ANTI- SQUEAL SHIMS

5. REMOVE 4 PAD SUPPORT PLATES

NOTICE:

There should be no oil or grease adhering to the friction surfaces of the pads or disc.

REAR BRAKE PAD

COMPONENTS

BR0L8-03

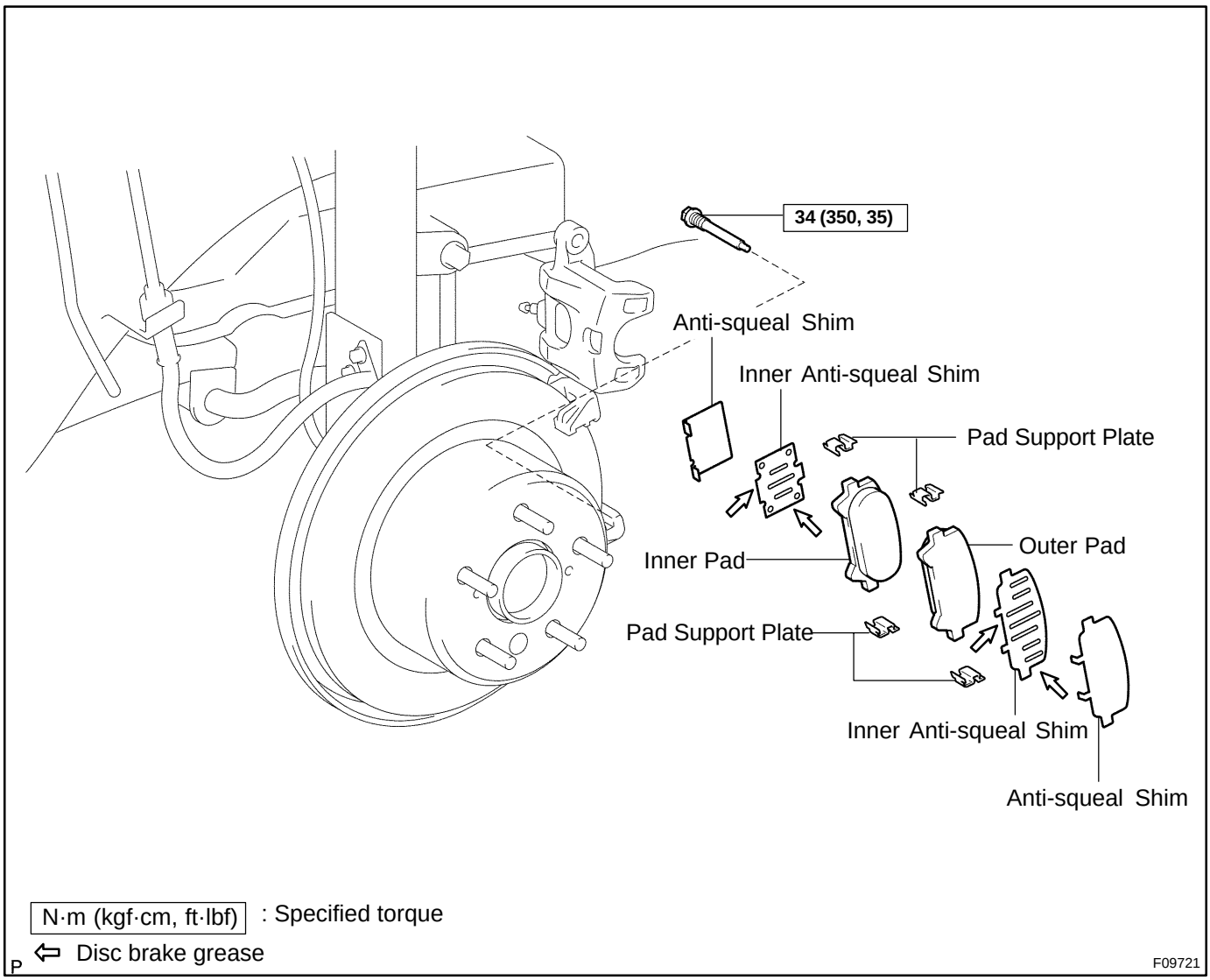

BR0L9-03

REPLACEMENT

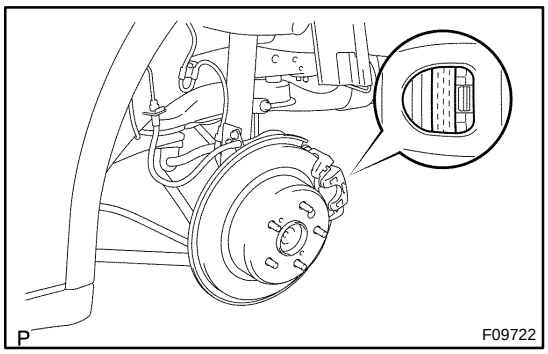

1. REMOVE REAR WHEEL

2. INSPECT PAD LINING THICKNESS

Check the pad's thickness through the caliper inspection hole and replace pads if not within specification.

Minimum thickness: 1.0 mm (0.039 in.)

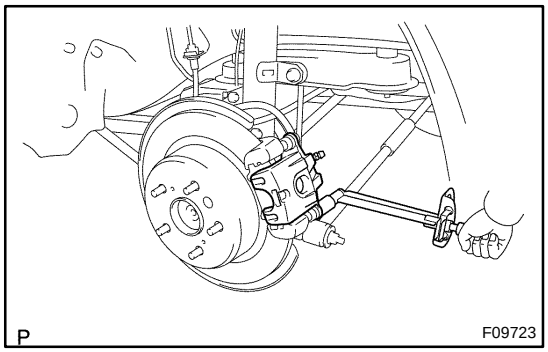

3. LIFT UP CALIPER

(a) Remove the bottom side installation bolt.

(b) Lift up and suspend it securely.

HINT:

Do not disconnect the flexible hose from the caliper.

4. REMOVE 2 BRAKE PADS WITH 4 ANTI- SQUEAL SHIMS

5. REMOVE 4 PAD SUPPORT PLATES

NOTICE:

The support plates can be used again provided that they have sufficient rebound, no deformation, cracks or wear, and have had all rust, dirt and foreign particles cleaned off.

6. CHECK DISC THICKNESS AND RUNOUT

(See page BR-40)

7. INSTALL PAD SUPPORT PLATES

Install the 4 pad support plates.

8. INSTALL NEW PADS

NOTICE:

When replacing worn pads, the anti-squeal shims must be replaced together with the pads.

(a) Apply disc brake grease to both side of the inner anti-squeal shims (See page BR-37).

(b) Install the 2 anti-squeal shims on each pad.

(c) Install 2 pads with the pad wear indicator plates facing downward.

NOTICE:

There should be no oil or grease adhering to the friction surfaces of the pads or the disc.

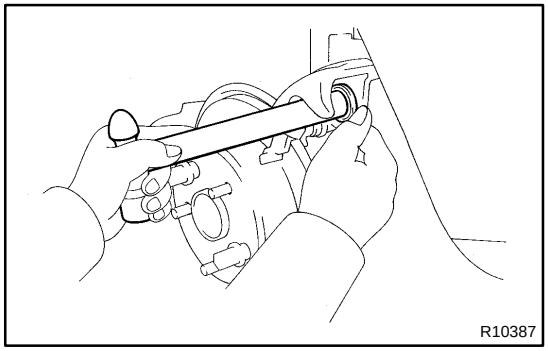

9. INSTALL CALIPER

(a) Draw out a small amount of brake fluid from the reservoir.

(b) Press in the piston with a hammer handle or similar implement.

HINT:

If the piston is difficult to push in, loosen the bleeder plug and push in the piston while letting some brake fluid escape.

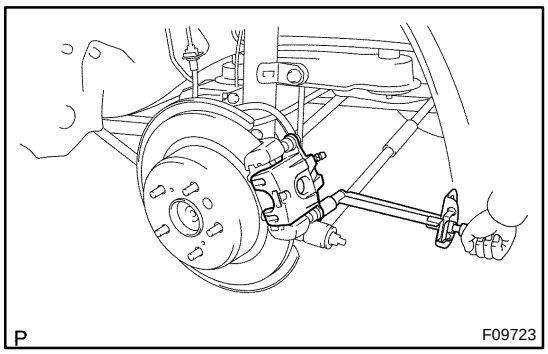

(c) Install the caliper.

(d) Install the installation bolt.

Torque: 34 N·m (350 kgf·cm, 25 ft·lbf)

10. INSTALL REAR WHEEL

Torque: 103 N·m (1,050 kgf·cm, 76 ft·lbf)

11. DEPRESS BRAKE PEDAL SEVERAL TIMES

12. CHECK THAT FLUID LEVEL IS AT MAX LINE

REAR SPEED SENSOR

COMPONENTS

BR0LX-03

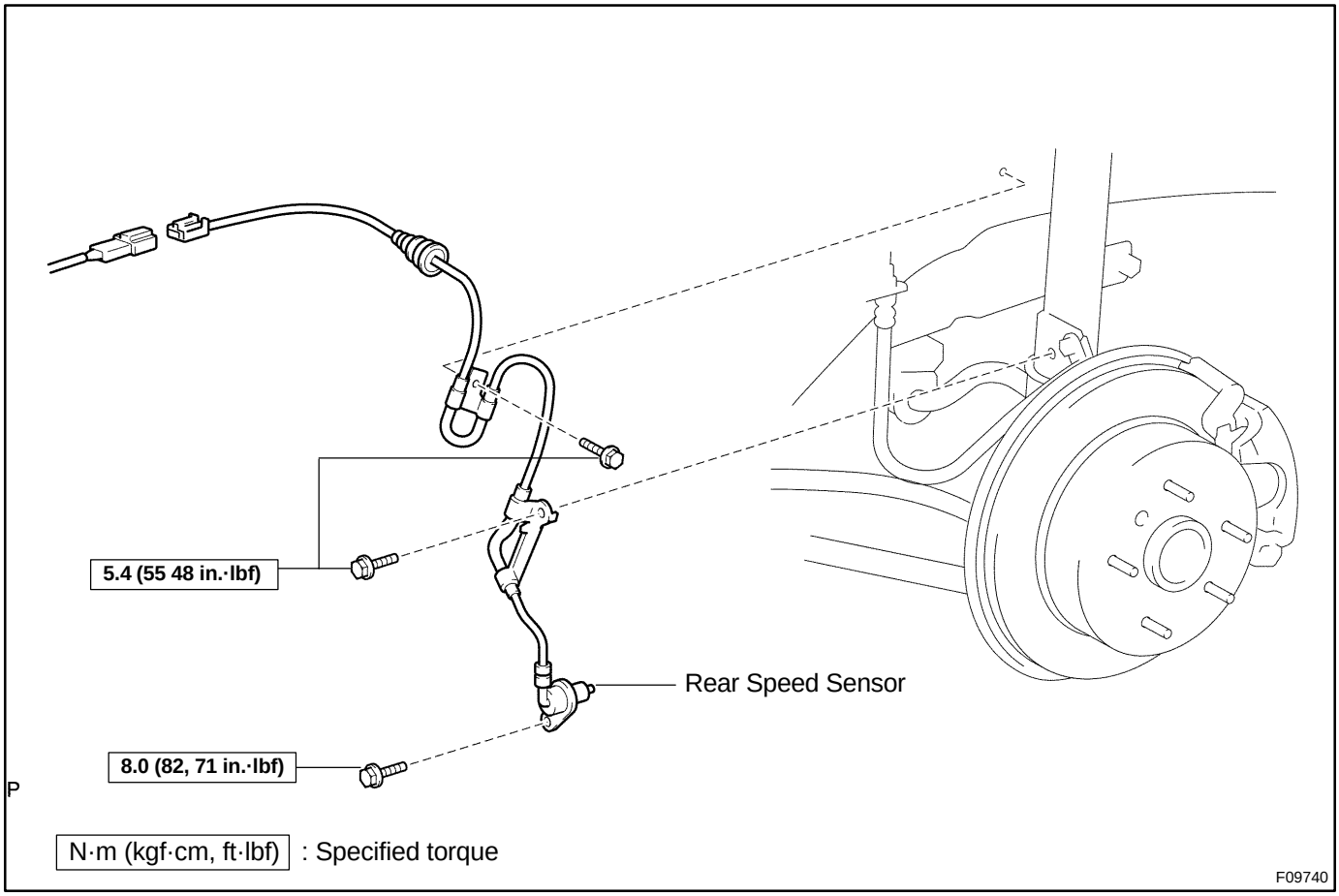

BR0LZ-04

INSTALLATION

Installation is in the reverse order of removal (See page BR-63).

AFTER INSTALLATION, CHECK SPEED SENSOR SIGNAL (See page DI-252 or DI-212)

BR0LY-03

REMOVAL

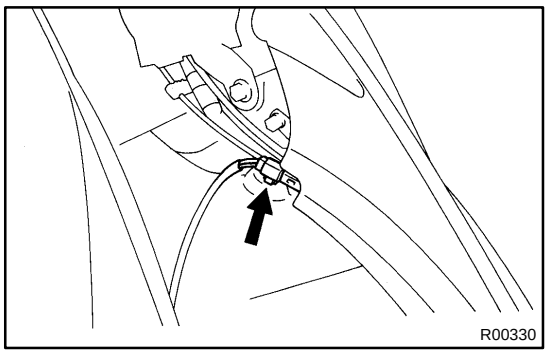

1. DISCONNECT SPEED SENSOR CONNECTOR

(a) Remove the seat cushion and seatback.

(b) Disconnect the speed sensor connector, and pull out the sensor wire harness with the grommet.

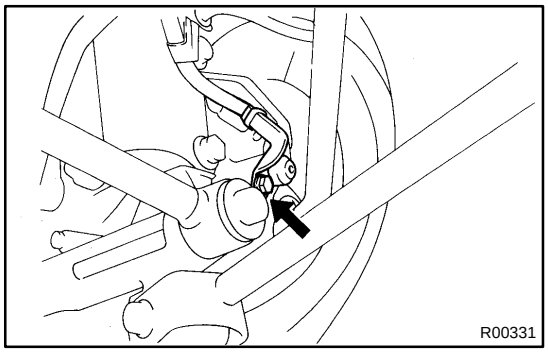

2. REMOVE SPEED SENSOR

(a) Remove the bolt and speed sensor from the axle carrier.
Torque: 8.0 N·m (82 kgf·cm, 71 in.·lbf)

(b) Remove the 2 clamp bolts holding the sensor wire harness to the body and shock absorber.
Torque: 5.4 N·m (55 kgf·cm, 48 in.·lbf)

TROUBLESHOOTING

PROBLEM SYMPTOMS TABLE

BR0KG-05

Use the table below to help you find the cause of the problem. The numbers indicate the priority of the likely cause of the problem. Check each part in order. If necessary, replace these parts.

Symptom	Suspect Area	See page
Lower pedal or spongy pedal	5. Fluid leaks for brake system	DI-249 DI-346
	6. Air in brake system	BR-4
	7. Piston seals (Worn or damaged)	BR-28 BR-37
	8. Master cylinder (Faulty)	BR-13
	9. Booster push rod (Out of adjustment)	BR-24
Brake drag	1. Brake pedal freeplay (Minimal)	BR-6
	2. Parking brake pedal travel (Out of adjustment)	BR-9
	3. Parking brake wire (Sticking)	-
	4. Rear brake shoe clearance (Out of adjustment)	BR-46
	5. Pad (Cracked or distorted)	BR-25 BR-34
	6. Piston (Stuck)	BR-28 BR-37
	7. Piston (Frozen)	BR-28 BR-37
	8. Tension or return spring (Faulty)	BR-43
	9. Booster push rod (Out of adjustment)	BR-24
	10. Vacuum leaks for booster system	BR-22
	11. Master cylinder (Faulty)	BR-13
Brake pull	1. Piston (Stuck)	BR-28 BR-37
	2. Pad (Oily)	BR-25 BR-34
	3. Piston (Frozen)	BR-28 BR-37
	4. Disc (Scored)	BR-28 BR-37
	5. Pad (Cracked or distorted)	BR-25 BR-34
Hard pedal but brake inefficient	1. Fluid leaks for brake system	DI-249 DI-346
	2. Air in brake system	BR-4
	3. Piston (Stuck)	BR-28 BR-37
	4. Pad (Cracked or distorted)	BR-25 BR-34
	5. Pad (Oily)	BR-25 BR-34
	6. Pad (Glazed)	BR-25 BR-34
	7. Disc (Scored)	BR-28 BR-37
	8. Booster push rod (Out of adjustment)	BR-24
	9. Vacuum leaks for booster system	BR-22

Symptom	Suspect Area	See page
Noise from brake	1. Pad (Cracked or distorted)	BR-25 BR-34
	2. Installation bolt (Loosen)	BR-28 BR-37
	3. Disc (Scored)	BR-28 BR-37
	4. Pad support plate (Loosen)	BR-25 BR-34
	5. Sliding pin (Worn)	BR-28 BR-37
	6. Pad (Dirty)	BR-25 BR-34
	7. Pad (Glazed)	BR-25 BR-34
	8. Tension or return spring (Faulty)	BR-43
	9. Anti-squeal shim (Damage)	BR-25 BR-34
	10.Hold-down spring (Damage)	BR-43

CHARGING SYSTEM

CH03U-03

ON-VEHICLE INSPECTION

CAUTION:

- **Check that the battery cables are connected to the correct terminals.**
- **Disconnect the battery cables when the battery is given a quick charge.**
- **Do not perform tests with a high voltage insulation resistance tester.**
- **Never disconnect the battery while the engine is running.**

1. CHECK BATTERY ELECTROLYTE LEVEL

Check the electrolyte quantity of each cell.

Maintenance-Free Battery:

If under the lower level, replace the battery (or add distilled water if possible). Check the charging system.

Except Maintenance-Free Battery:

If under the lower level, add distilled water.

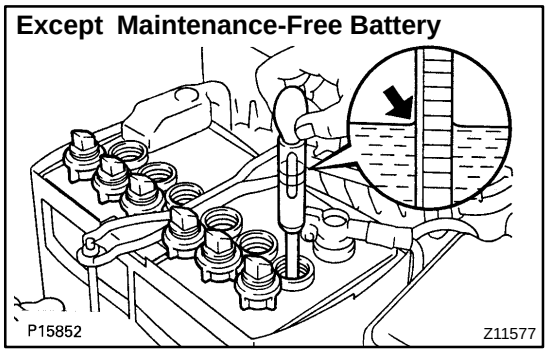

2. Except Maintenance-Free Battery: CHECK BATTERY SPECIFIC GRAVITY

Check the specific gravity of each cell.

Standard specific gravity: 1.25 - 1.29 at 20˚C (68˚F)

If the specific gravity is less than specification, charge the battery.

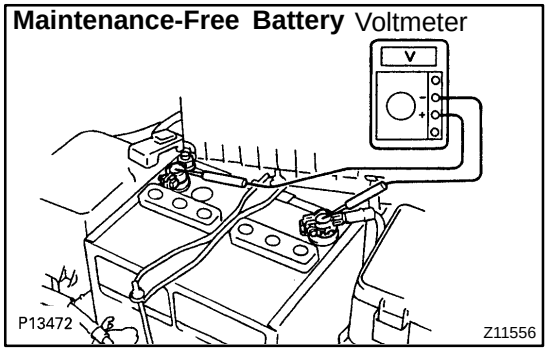

3. Maintenance-Free Battery: CHECK BATTERY VOLTAGE

(a) After having driven the vehicle and in the case that 20 minutes have not passed after having stopped the engine, turn the ignition switch ON and turn on the electrical system (headlight, blower motor, rear defogger etc.) for 60 seconds to remove the surface charge.

(b) Turn the ignition switch OFF and turn off the electrical systems.

(c) Measure the battery voltage between the negative (-) and positive (+) terminals of the battery.

Standard voltage: 12.5 - 12.9 V at 20˚C (68˚F)

If the voltage is less than specification, charge the battery.

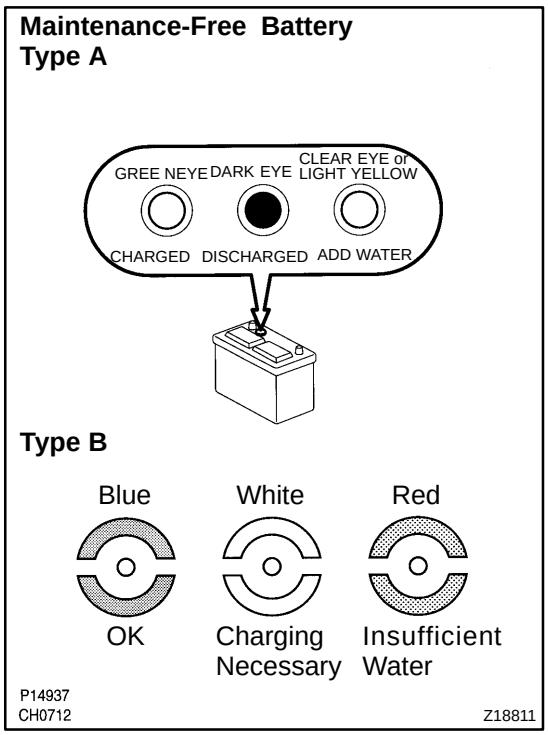

HINT:

Check the indicator as shown in illustration.

4. CHECK BATTERY TERMINALS, FUSIBLE LINK AND FUSES

(a) Check that the battery terminals are not loose or corroded.

(b) Check the fusible link and fuses for continuity.

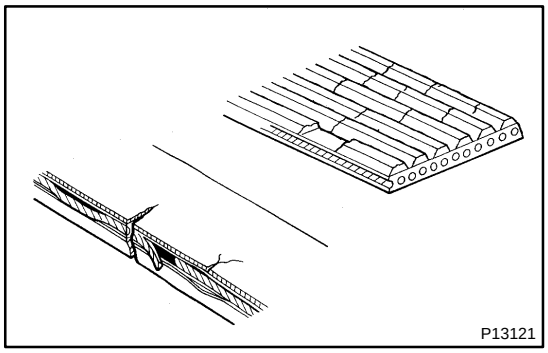

5. INSPECT DRIVE BELT

(a) Visually check the belt for excessive wear, frayed cords etc.

If any defect has been found, replace the drive belt.

HINT:

Cracks on the rib side of a belt are considered acceptable. If the belt has chunks missing from the ribs, it should be replaced.

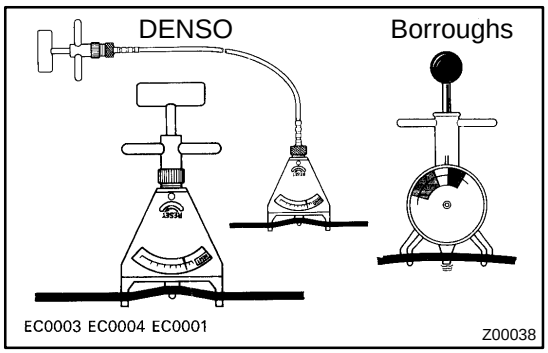

(b) Using a belt tension gauge, measure the drive belt tension.

Belt tension gauge:

DENSO BTG-20 (95506-00020)

Borroughs No. BT-33-73F

Drive belt tension:

New belt	175 ± 5 lbf
Used belt	115 ± 20 lbf

If the belt tension is not as specified, adjust it.

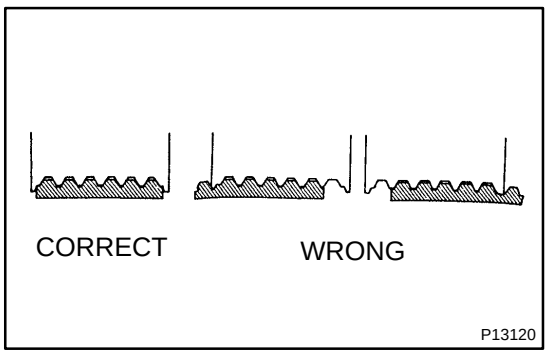

HINT:

- "New belt" refers to a belt which has been used less than 5 minutes on a running engine.
- "Used belt" refers to a belt which has been used on a running engine for 5 minutes or more.
- After installing a belt, check that it fits properly in the ribbed grooves.
- Check with your hand to confirm that the belt has not slipped out of the groove on the bottom of the pulley.

- After installing a new belt, run the engine for about 5 minutes and recheck the belt tension.

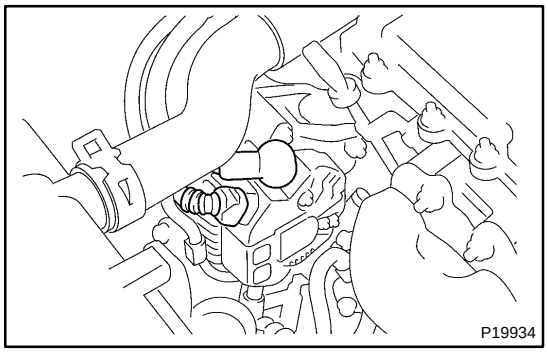

6. VISUALLY CHECK GENERATOR WIRING AND LISTEN FOR ABNORMAL NOISES

(a) Check that the wiring is in good condition.

(b) Check that there is no abnormal noise from the generator while the engine is running.

7. CHECK DISCHARGE WARNING LIGHT CIRCUIT

(a) Warm up the engine and then turn it off.

(b) Turn off all accessories.

(c) Turn the ignition switch "ON". Check that the discharge warning light is lit.

(d) Start the engine. Check that the light goes off.

If the light does not go off as specified, troubleshoot the discharge light circuit.

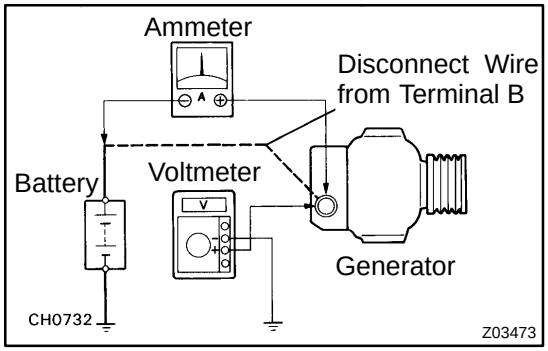

8. INSPECT CHARGING CIRCUIT WITHOUT LOAD

HINT:

If a battery/generator tester is available, connect the tester to the charging circuit as per the manufacturer's instructions.

(a) If a tester is not available, connect a voltmeter and ammeter to the charging circuit as follows:

- Disconnect the wire from terminal B of the generator, and connect it to the negative (-) probe of the ammeter.
- Connect the positive (+) probe of the ammeter to terminal B of the generator.
- Connect the positive (+) probe of the voltmeter to terminal B of the generator.
- Ground the negative (-) probe of the voltmeter.

(b) Check the charging circuit as follows:

With the engine running from idling to 2,000 rpm, check the reading on the ammeter and voltmeter.

Standard amperage: 10 A or less

Standard voltage: 13.2 -14.8 V

If the voltmeter reading is more than standard voltage, replace the voltage regulator.

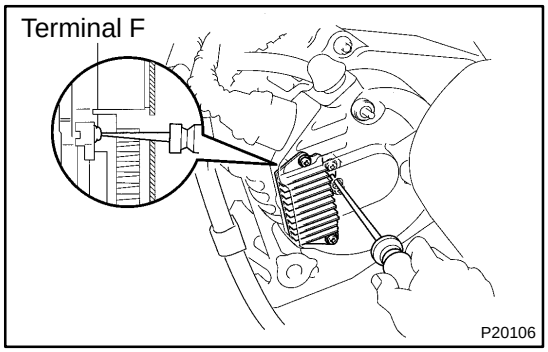

If the voltmeter reading is less than standard voltage, check the voltage regulator and generator as follows:

- With terminal F grounded, start the engine and check the voltmeter reading of terminal B.
- If the voltmeter reading is more than standard voltage, replace the voltage regulator.
- If the voltmeter reading is less than standard voltage, check the generator.

9. INSPECT CHARGING CIRCUIT WITH LOAD

(a) With the engine running at 2,000 rpm, turn on the high beam headlights and place the heater blower switch at "HI".

(b) Check the reading on the ammeter.

Standard amperage: 30 A or more

If the ammeter reading is less than the standard amperage, repair the generator.

HINT:

If the battery is fully charged, the indication will sometimes be less than standard amperage.

GENERATOR

COMPONENTS

CH03V-02

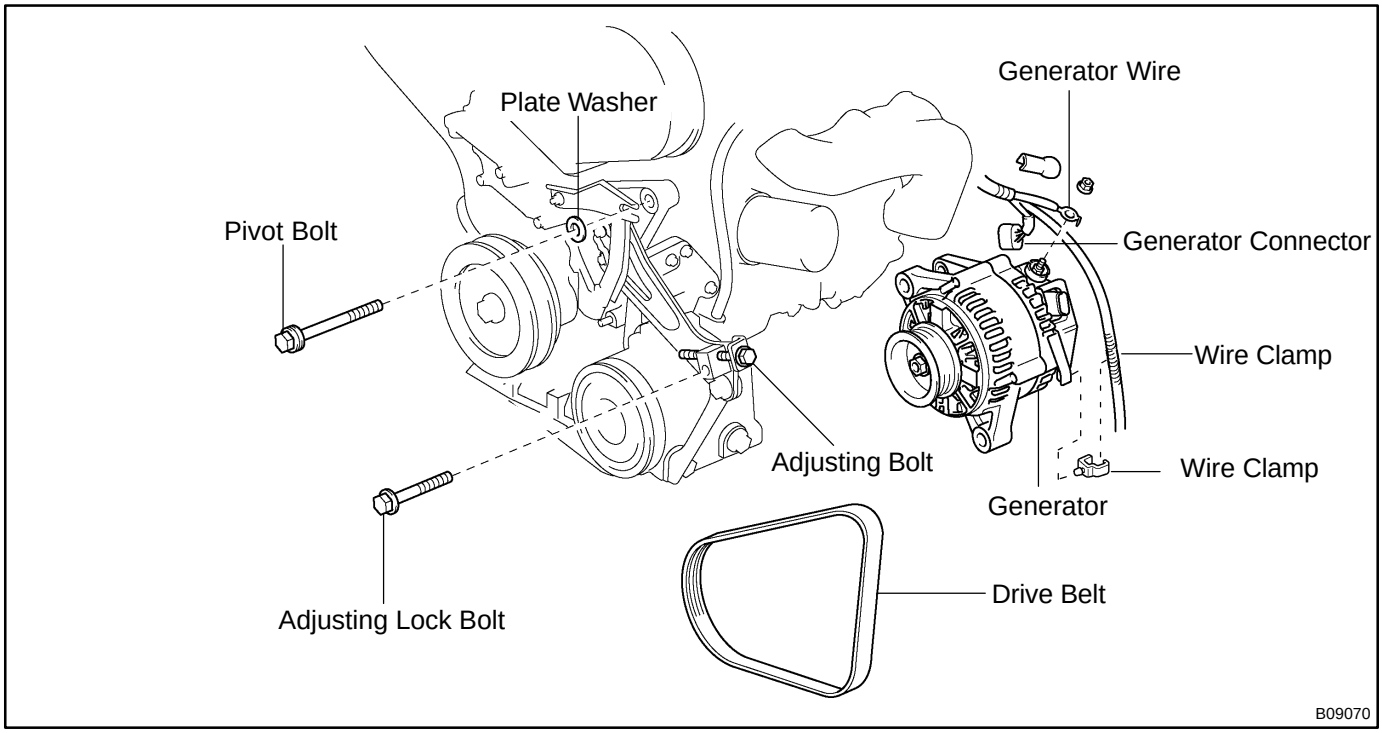

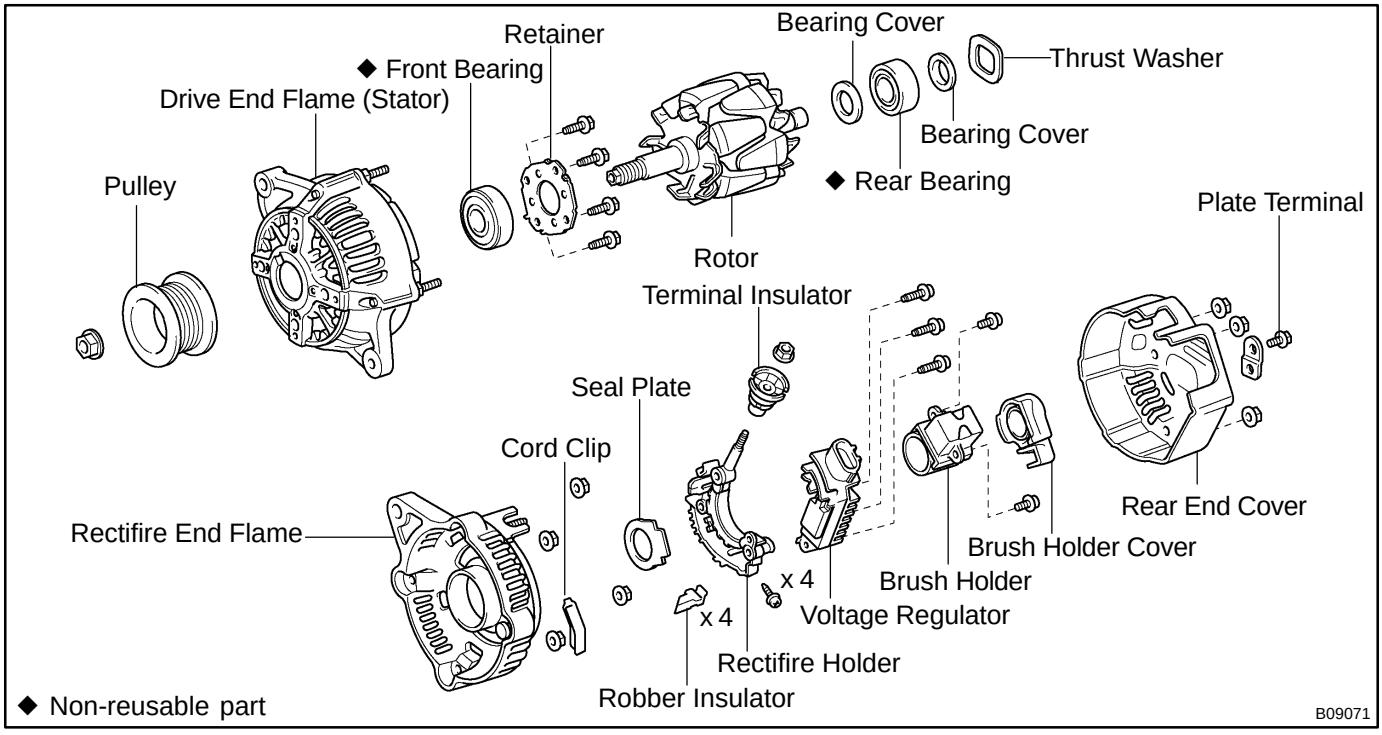

CH03X-01

DISASSEMBLY

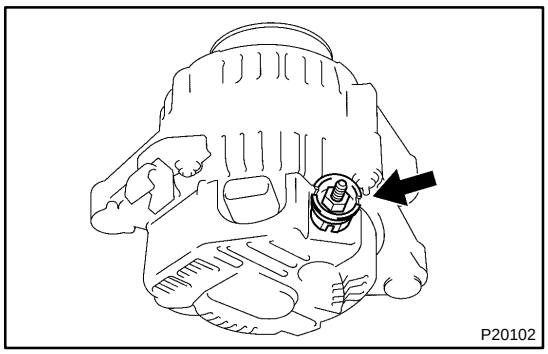

1. REMOVE REAR END COVER

(a) Remove the nut and terminal insulator.

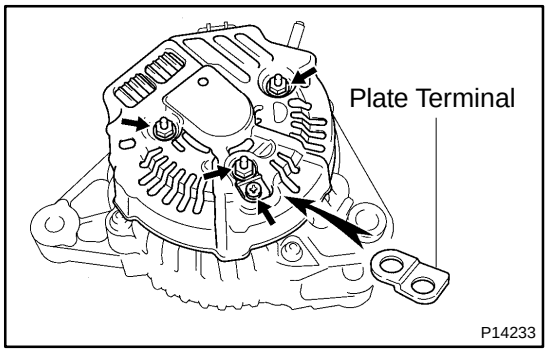

(b) Remove the screw, 3 nuts, plate terminal and end cover.

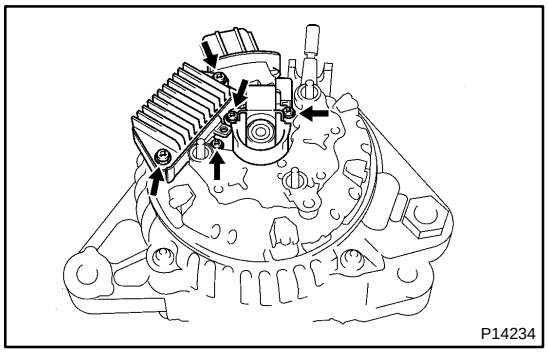

2. REMOVE BRUSH HOLDER AND VOLTAGE REGULATOR

(a) Remove the brush holder cover from the brush holder.

(b) Remove the 5 screws, brush holder and voltage regulator.

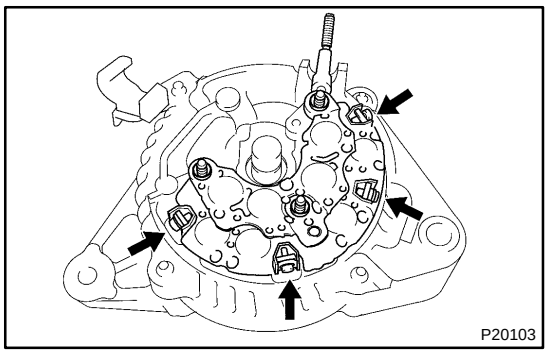

3. REMOVE RECTIFIER HOLDER

(a) Remove the 4 screws and rectifier holder.

(b) Remove the 4 rubber insulators.

(c) Remove the seal plate.

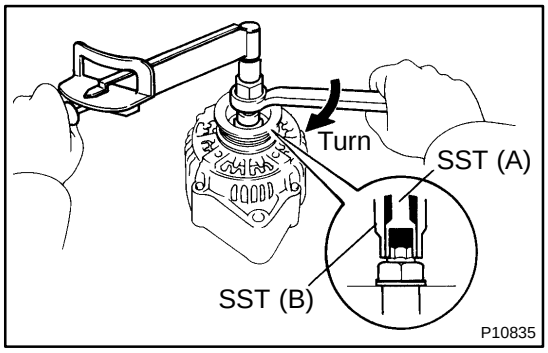

4. REMOVE PULLEY

(a) Hold SST (A) with a torque wrench, and tighten SST (B) clockwise to the specified torque.

SST 09820-63010

Torque: 39 N·m (400 kgf·cm, 29 ft·lbf)

(b) Check that SST (A) is secured to the rotor shaft.

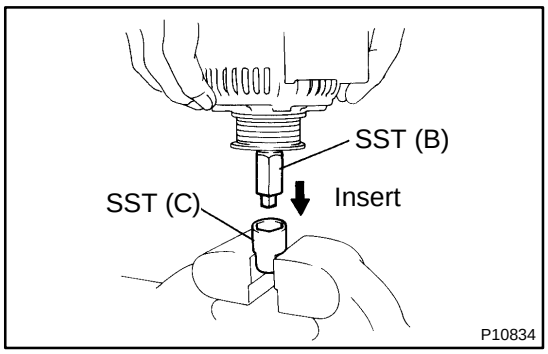

(c) Mount SST (C) in a vise.
(d) Insert SST (B) into SST (C), and attach the pulley nut to SST (C).

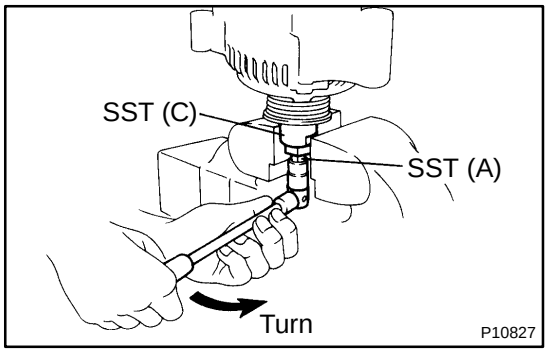

(e) To loosen the pulley nut, turn SST (A) in the direction shown in the illustration.

NOTICE:

To prevent damage to the rotor shaft, do not loosen the pulley nut more than one-half of a turn.

(f) Remove the generator from SST (C).

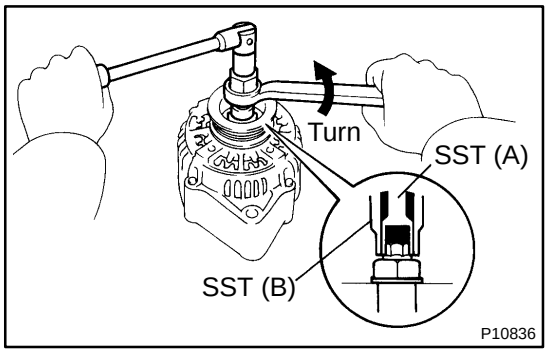

(g) Turn SST (B), and remove SST (A and B).
(h) Remove the pulley nut and pulley.

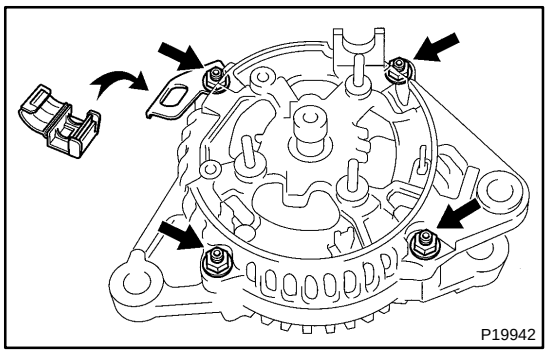

5. REMOVE RECTIFIER END FRAME

(a) Remove the wire clamp.
(b) Remove the 4 nuts and cord clip.

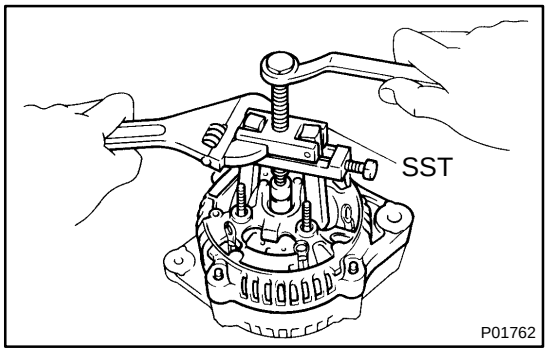

(c) Using SST, remove the rectifier end frame.
SST 09286-4601 1
(d) Remove the thrust washer.

6. REMOVE ROTOR FROM DRIVE END FRAME

CH03Y-01

INSPECTION

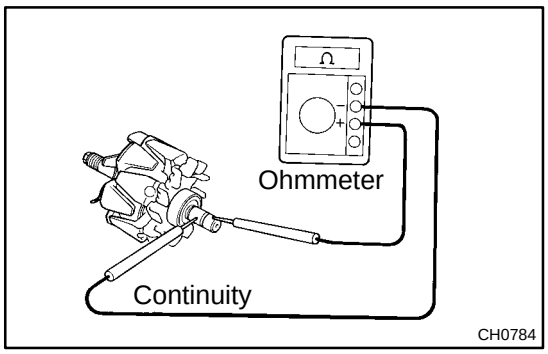

1. INSPECT ROTOR

(a) Inspect the rotor for open circuit.
Using an ohmmeter, check that there is continuity between the slip rings.
Standard resistance: 2.1 - 2.5 Ω at 20˚C (68˚F)

If there is no continuity, replace the rotor.

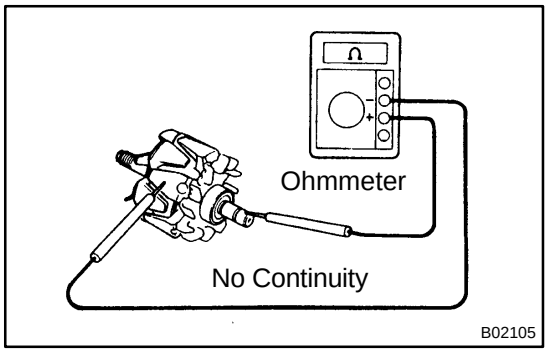

(b) Inspect the rotor for ground.
Using an ohmmeter, check that there is no continuity between the slip ring and rotor.

If there is continuity, replace the rotor.

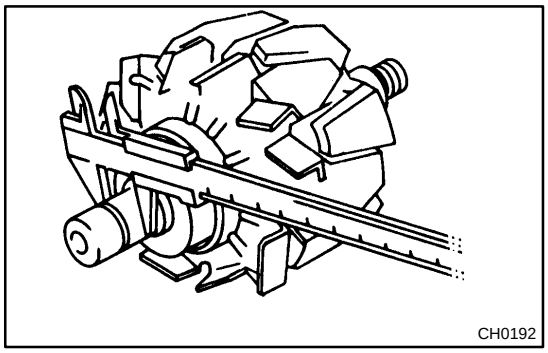

(c) Check that the slip rings are not rough or scored.

If rough or scored, replace the rotor.

(d) Using vernier calipers, measure the slip ring diameter.
Standard diameter: 14.2 - 14.4 mm (0.559-0.567 in.)
Minimum diameter: 12.8 mm (0.504 in.)

If the diameter is less than minimum, replace the rotor.

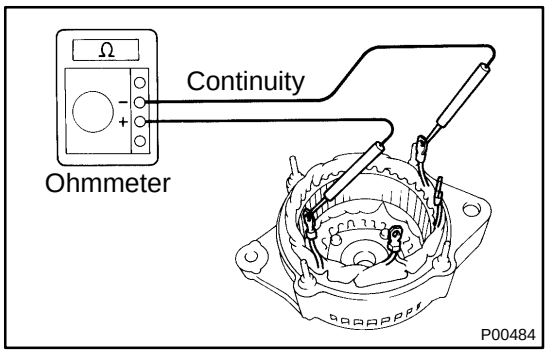

2. INSPECT STATOR (DRIVE END FLAME)

(a) Inspect the stator for open circuit.
Using an ohmmeter, check that there is continuity between the coil leads.

If there is no continuity, replace the drive end frame assembly.

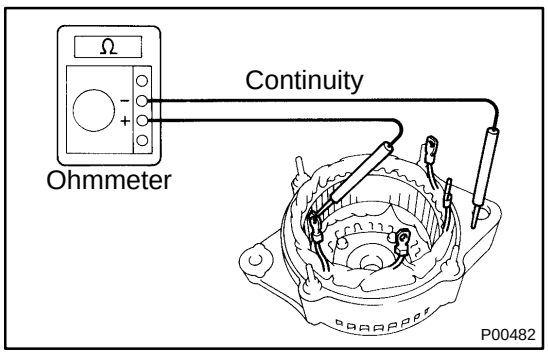

(b) Inspect the stator for ground.
Using an ohmmeter, check that there is no continuity between the coil lead and drive end frame.

If there is continuity, replace the drive end frame assembly.

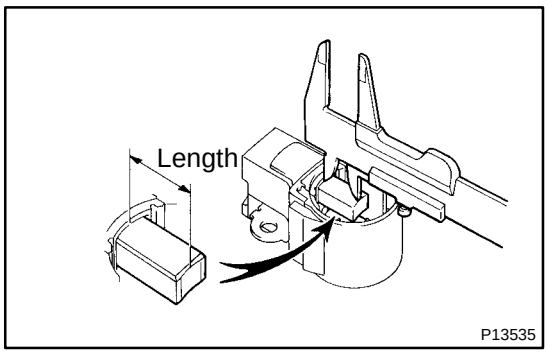

3. INSPECT BRUSHES

Using a vernier caliper, measure the exposed brush length.

Standard exposed length: 10.5 mm (0.413 in.)

Minimum exposed length: 1.5 mm (0.059 in.)

If the exposed length is less than minimum, replace the brushes and brush holder assembly.

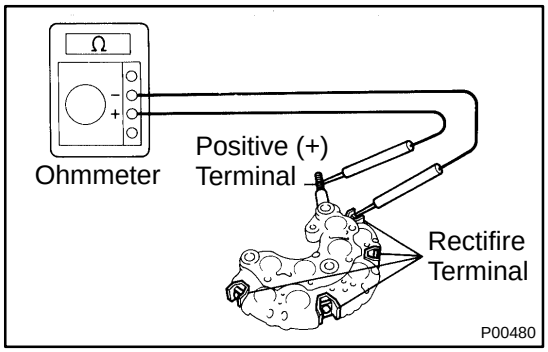

4. INSPECT RECTIFIERS (RECTIFIRE HOLDER)

(a) Check the positive (+) rectifire.

(1) Using an ohmmeter, connect one tester probe to the positive (+) terminal and the other to each rectifier terminal.

(2) Reverse the polarity of the tester probes and repeat step (a).

(3) Check that one shows continuity and the other shows no continuity.

If continuity is not as specified, replace the rectifier holder.

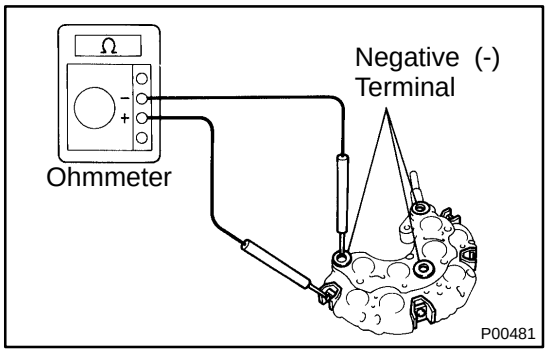

(b) Check the negative (-) rectifire.

(1) Using an ohmmeter, connect one tester probe to each negative (-) terminal and the other to each rectifier terminal.

(2) Reverse the polarity of the tester probes and repeat step (a).

(3) Check that one shows continuity and the other shows no continuity.

If continuity is not as specified, replace the rectifier holder.

5. INSPECT BEARING

Check that bearing is not rough or worn.

If necessary, replace the bearing (See page CH-1 1).

CH041-01

INSTALLATION

Installation is in the reverse order of removal (See page CH-6).

CH040-02

REASSEMBLY

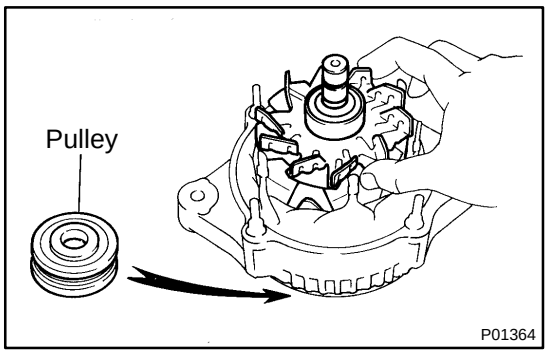

1. INSTALL ROTOR TO DRIVE END FRAME

(a) Place the rectifier end frame on the pulley.

(b) Install the rotor to the rectifier end frame.

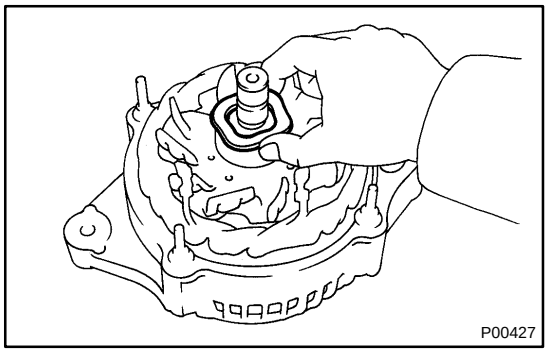

2. INSTALL RECTIFIER END FRAME

(a) Place the thrust washer on the rotor.

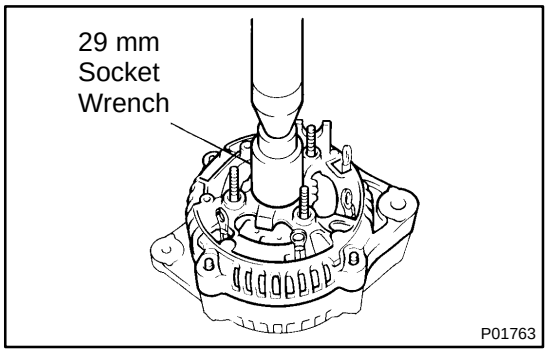

(b) Using a 29 mm socket wrench and press, slowly press in the rectifier end frame.

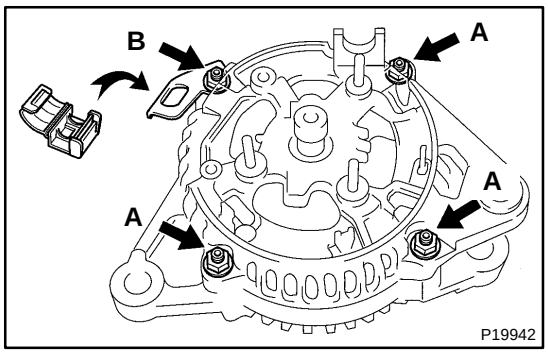

(c) NUT A:
Install the cord clip and 4 nuts.
Torque: 4.5 N·m (46 kgf·cm, 40 in.·lbf)

(d) NUT B:
Install the cord clip and 4 nuts.
Torque: 5.4 N·m (55 kgf·cm, 48 in.·lbf)

(e) Install the wire clamp.

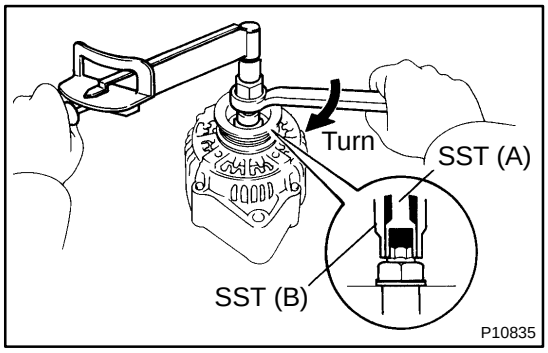

3. INSTALL PULLEY

(a) Install the pulley to the rotor shaft by tightening the pulley nut by hand.

(b) Hold SST (A) with a torque wrench, and tighten SST (B) clockwise to the specified torque.
SST 09820-63010
Torque: 39 N·m (400 kgf·cm, 29 ft·lbf)

(c) Check that SST (A) is secured to the pulley shaft.

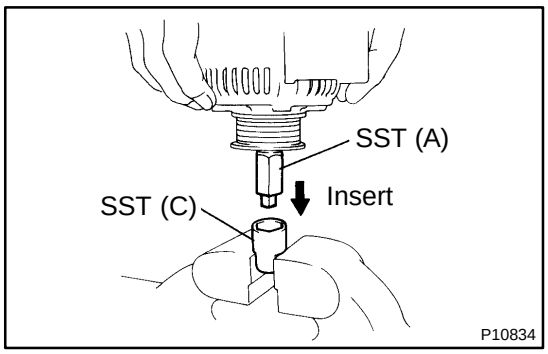

(d) Mount SST (C) in a vise.
(e) Insert SST (B) into SST (C), and attach the pulley nut to SST (C).

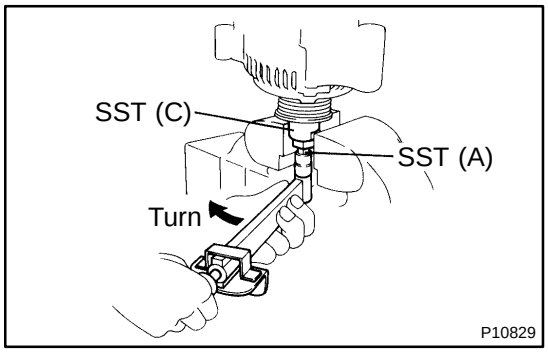

(f) To torque the pulley nut, turn SST (A) in the direction shown in the illustration.
Torque: 110.5 N·m (1,125 kgf·cm, 81 ft·lbf)
(g) Remove the generator from SST (C).

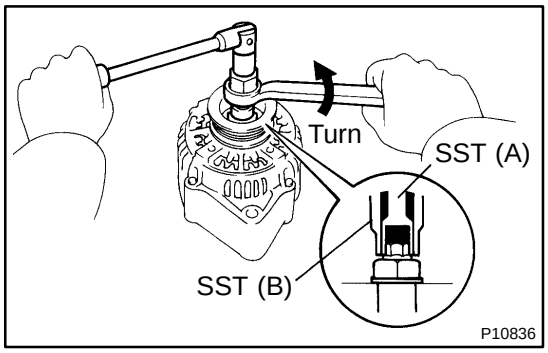

(h) Turn SST (B), and remove SST (A and B).

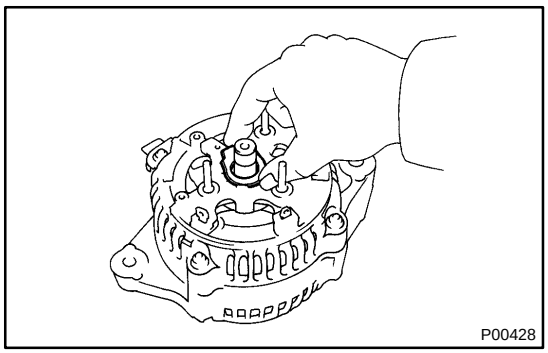

4. INSTALL RECTIFIER HOLDER
(a) Place the seal plate on the rectifier end frame.

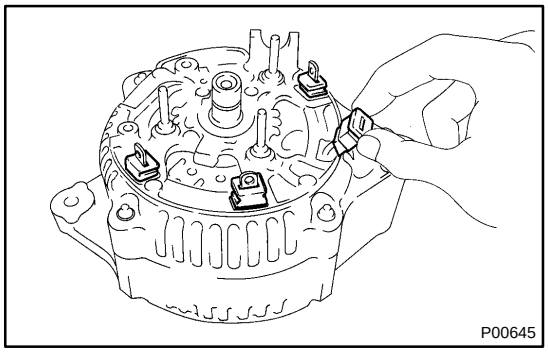

(b) Install the 4 rubber insulators on the lead wires.

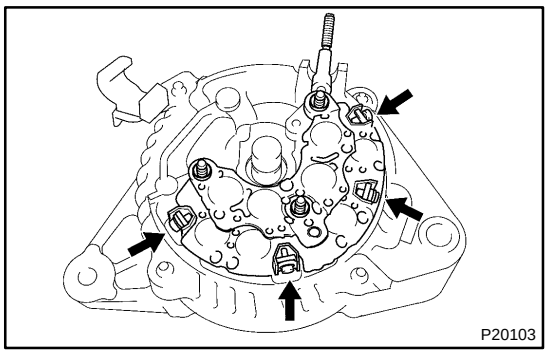

(c) Install the rectifier holder with the 4 screws.
Torque: 2.9 N·m (30 kgf·cm, 26 in.·lbf)

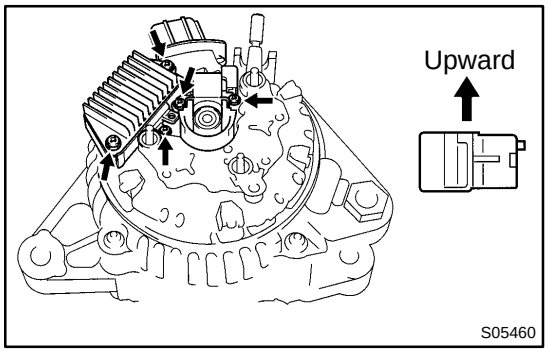

5. INSTALL VOLTAGE REGULATOR AND BRUSH HOLDER

(a) Place the voltage regulator and brush holder on the rectifier end frame.

NOTICE:
Be careful of the holder installation direction.

(b) Install the 5 screws.
Torque: 2.0 N·m (20 kgf·cm, 18 in.·lbf)

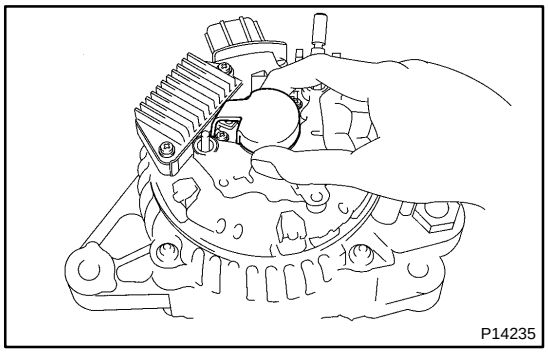

(c) Place the brush holder cover on the brush holder.

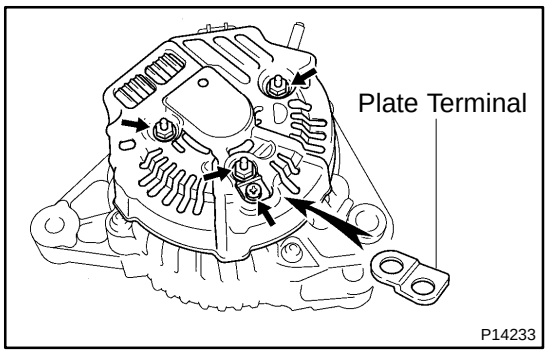

6. INSTALL REAR END COVER

(a) Install the end cover and plate terminal with the 3 nuts and screw.
Torque:
Screw: 3.9 N·m (39 kgf·cm, 35 in.·lbf)
Nut: 4.4 N·m (45 kgf·cm, 39 in.·lbf)

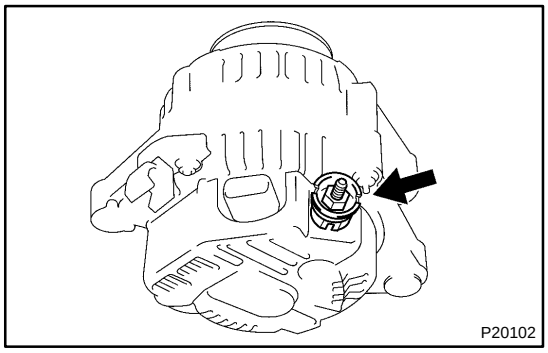

(b) Install the terminal insulator with the nut.
Torque: 4.1 N·m (41.5 kgf·cm, 36 in.·lbf)

7. CHECK THAT ROTOR ROTATES SMOOTHLY

CH03W-02

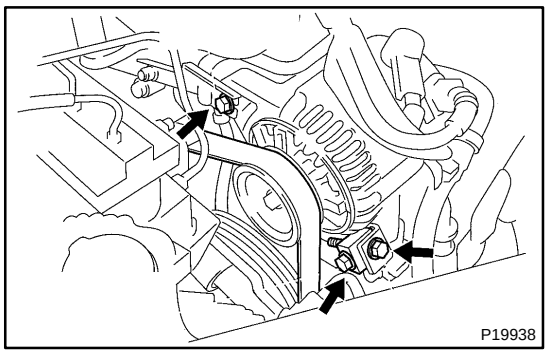

REMOVAL

1. REMOVE DRIVE BELT

Loosen the pivot bolt, adjusting lock bolt and adjusting bolt, and remove the drive belt.

Torque:
Lock bolt: 18 N·m (180 kgf·cm, 13 ft·lbf)
Pivot bolt: 56 N·m (570 kgf·cm, 41 ft·lbf)

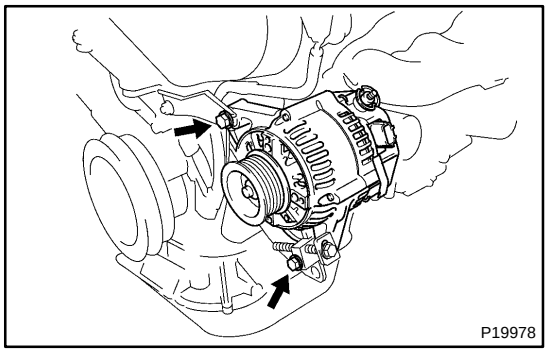

2. REMOVE GENERATOR

(a) Disconnect the generator connector.
(b) Remove the nut, and disconnect the generator wire.
Torque: 9.8 N·m (100 kgf·cm, 86 in.·lbf)
(c) Disconnect the wire harness from the clip.
(d) Remove the pivot bolt, plate washer, adjusting lock bolt and generator.

CH03Z-02

REPLACEMENT

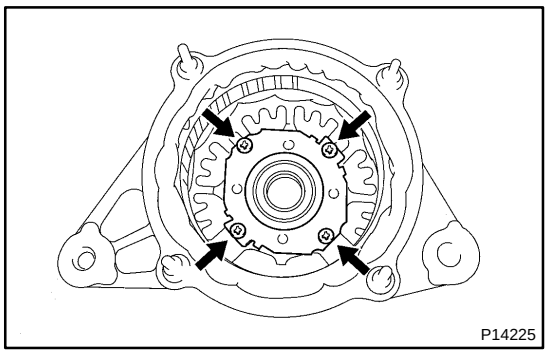

1. REPLACE FRONT BEARING

(a) Remove the 4 screws and bearing retainer.

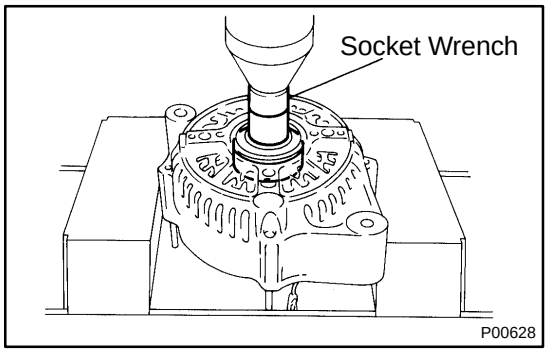

(b) Using a socket wrench and press, press out the bearing.

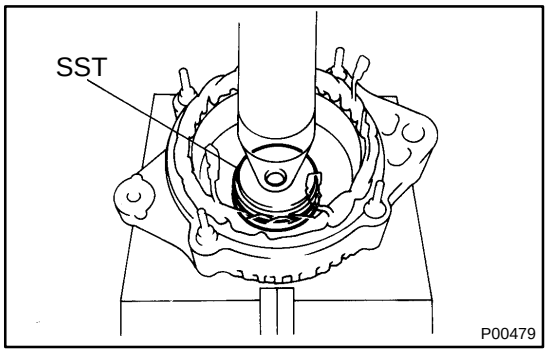

(c) Using SST and a press, press in a new bearing.
SST 09950-60010 (09951-00520)

(d) Install the bearing retainer with the 4 screws.
Torque: 3.0 N·m (31 kgf·cm, 27 in.·lbf)

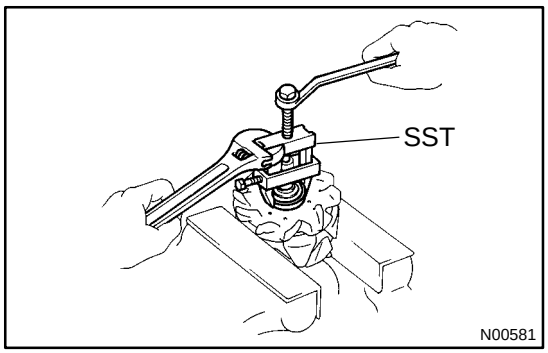

2. REPLACE REAR BEARING

(a) Using SST,remove the bearing cover (outside) and bearing.
SST 09820-00021

NOTICE:

Be careful not to damage the fan.

(b) Remove the bearing cover (inside).

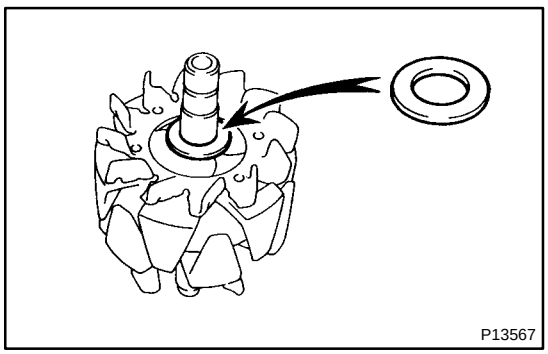

(c) Place the bearing cover (inside) on the rotor.

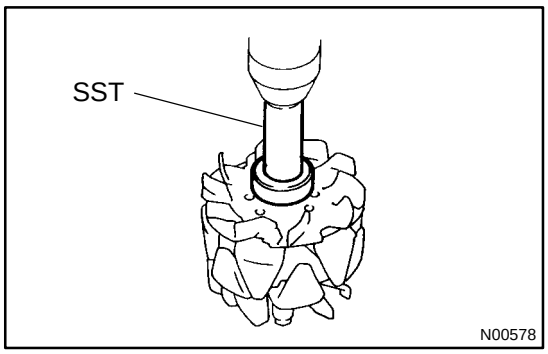

(d) Using SST and a press, press in a new bearing.
SST 09820-00030

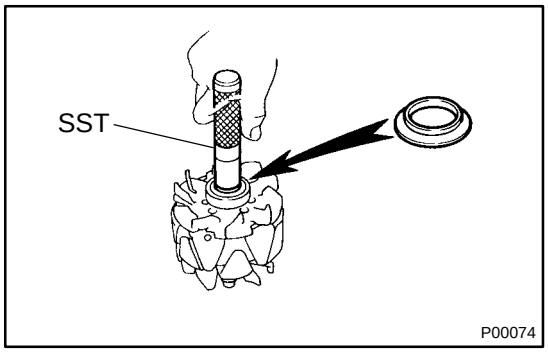

(e) Using SST, push in the bearing cover (outside).
SST 09285-76010

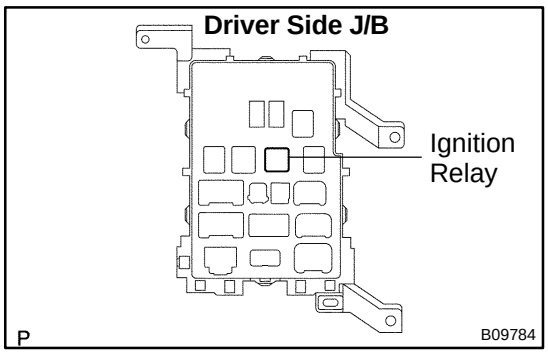

IGNITION RELAY (No.1)

SF0DX-05

INSPECTION

1. REMOVE IGNITION RELAY (Marking: IG1)

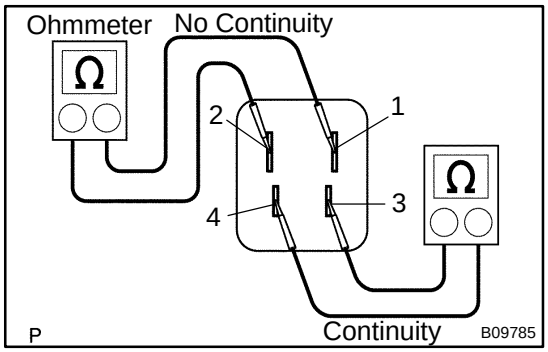

2. INSPECT IGNITION RELAY

(a) Inspect the relay continuity.

(1) Using an ohmmeter, check that there is no continuity between terminals 1 and 2.

If there is continuity, replace the relay.

(2) Check that there is continuity between terminals 3 and 4.

If there is no continuity, replace the relay.

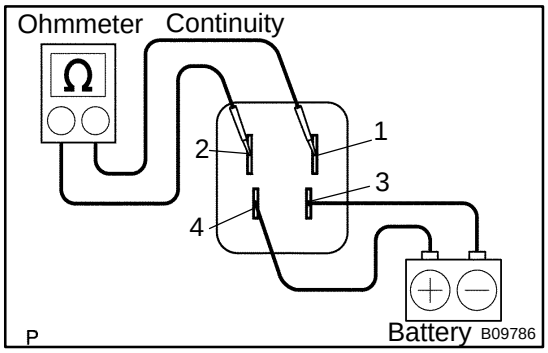

(b) Inspect the relay operation.

(1) Apply battery positive voltage across terminals 3 and 4.

(2) Using an ohmmeter, check that there is continuity between terminals 1 and 2.

If there is no continuity, replace the relay.

3. REINSTALL IGNITION RELAY

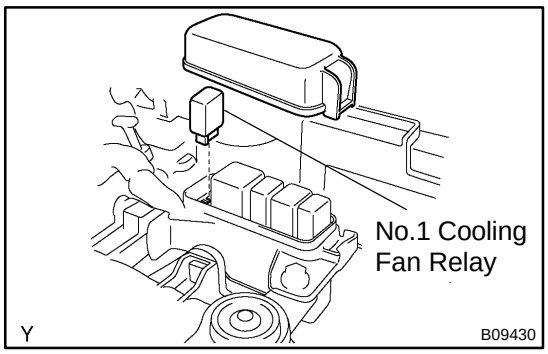

COOLING FAN RELAY

CO0WW-01

INSPECTION

1. REMOVE RELAY BOX COVER

2. INSPECT NO.1 COOLING FAN RELAY

(a) Remove the No.1 cooling fan relay. (Marking: FAN NO.1)

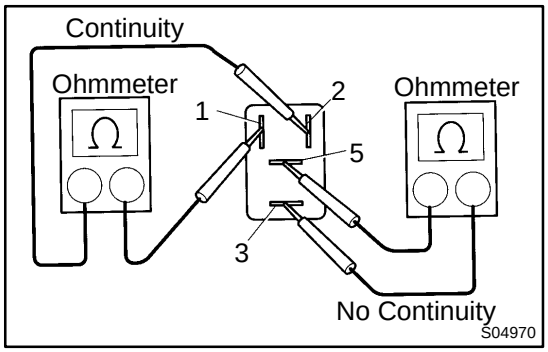

(b) Inspect the No.1 cooling fan relay continuity.

(1) Using an ohmmeter, check that there is continuity between terminals 1 and 2.

If there is no continuity, replace the relay.

(2) Check that there is no continuity between terminals 3 and 5.

If there is continuity, replace the relay.

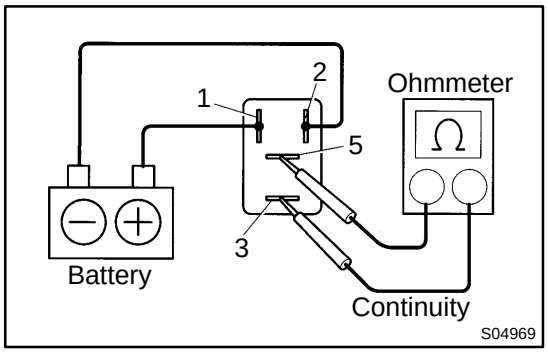

(c) Inspect the No.1 cooling fan relay operation.

(1) Apply battery positive voltage across terminals 1 and 2.

(2) Using an ohmmeter, check that there is continuity between terminals 3 and 5.

If there is no continuity, replace the relay.

(d) Reinstall the No.1 cooling fan relay.

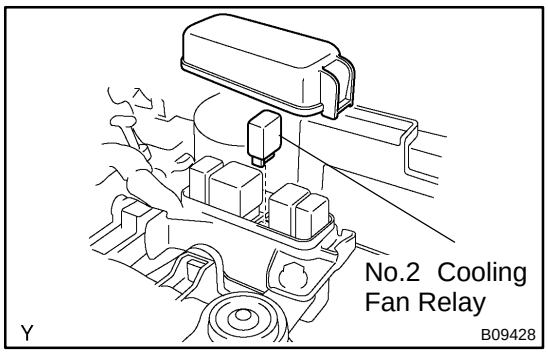

3. INSPECT NO.2 COOLING FAN RELAY

(a) Remove the No.2 cooling fan relay. (Marking: FAN NO.2)

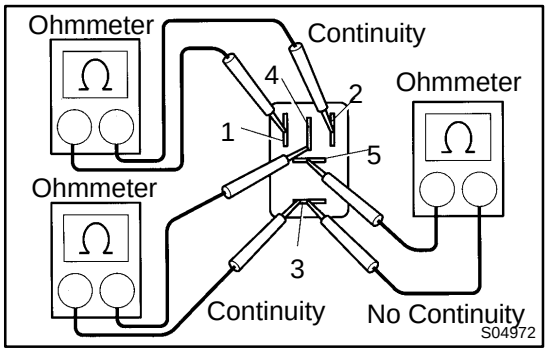

(b) Inspect the No.2 cooling fan relay continuity.

(1) Using an ohmmeter, check that there is continuity between terminals 1 and 2.

If there is no continuity, replace the relay.

(2) Check that there is continuity between terminals 3 and 4.

If there is no continuity, replace the relay.

(3) Check that there is no continuity between terminals 3 and 5.

If there is continuity, replace the relay.

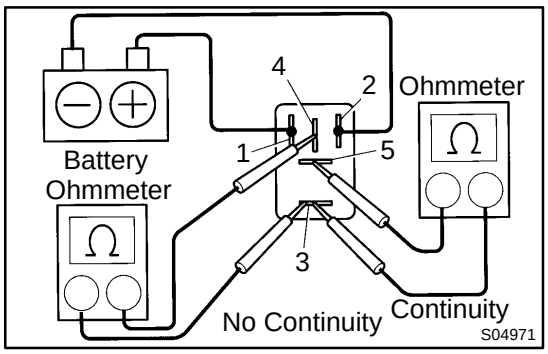

(c) Inspect the No.2 cooling fan relay operation.
   (1) Apply battery positive voltage across terminals 1 and 2.
   (2) Using an ohmmeter, check that there is no continuity between terminals 3 and 4.

If there is continuity, replace the relay.

   (3) Check that there is continuity between terminals 3 and 5.

If there is no continuity, replace the relay.

(d) Reinstall the No.2 cooling fan relay.

4. INSPECT NO.3 COOLING FAN RELAY

(a) Remove the No.3 cooling fan relay. (Marking: FAN NO.3)

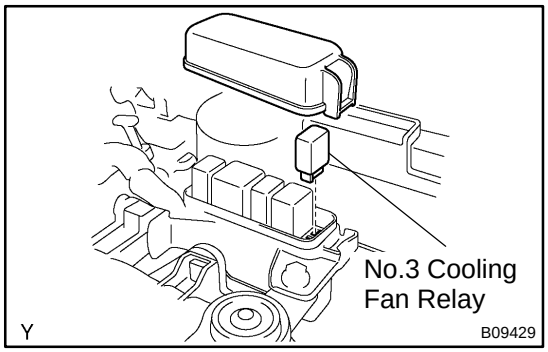

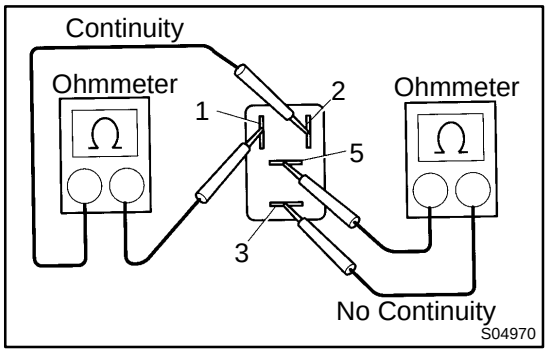

(b) Inspect the No.3 cooling fan relay continuity.
   (1) Using an ohmmeter, check that there is continuity between terminals 1 and 2.

If there is mo continuity, replace the relay.

   (2) Check that there is no continuity between terminals 3 and 5.

If there is continuity, replace the relay.

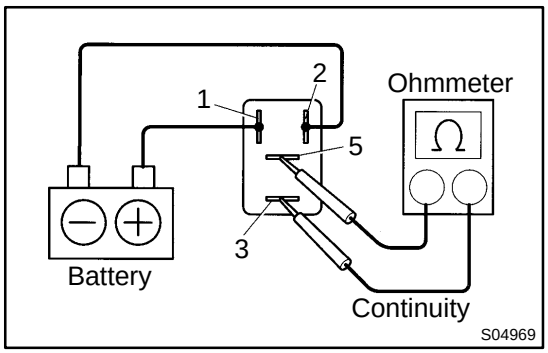

(c) Inspect the No.3 cooling fan relay operation.
   (1) Apply battery positive voltage across terminals 1 and 2.
   (2) Using an ohmmeter, check that there is continuity between terminals 3 and 5.

If there is no continuity, replace the relay.

(d) Reinstall the No.3 cooling fan relay.

5. REINSTALL RELAY BOX COVER

COOLANT

CO02K-03

INSPECTION

1. CHECK ENGINE COOLANT LEVEL AT RADIATOR RESERVOIR

The engine coolant level should be between the ”LOW” and ”FULL” lines, when the engine is cold.

If low, check for leaks and add ”Toyota Long Life Coolant” or Equivalent up to the ”FULL” line.

2. CHECK ENGINE COOLANT QUALITY

(a) Remove the radiator cap from the water outlet.

CAUTION:

To avoid the danger of being burned, do not remove the radiator cap while the engine and radiator are still hot, as fluid and steam can be blown out under pressure.

(b) There should not be any excessive deposits of rust or scale around the radiator cap or water outlet filler hole, and the coolant should be free from oil.

If excessively dirty, clean the coolant passages and replace the coolant.

(c) Reinstall the radiator cap.

CO02L-03

REPLACEMENT

1. DRAIN ENGINE COOLANT

(a) Remove the radiator cap from the water outlet.

CAUTION:

To avoid the danger of being burned, do not remove the radiator cap while the engine and radiator are still hot, as fluid and steam can be blown out under pressure.

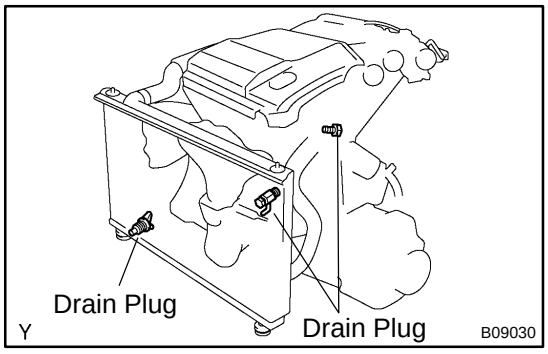

(b) Loosen the radiator drain plug and engine drain plugs, and drain the coolant.

(c) Close the drain plugs.

Torque:

RH engine drain plug on cylinder block side cover:
7 N·m (70 kgf·cm, 61 in.·lbf)
LH engine drain plug on union:
13 N·m (130 kgf·cm, 9 ft·lbf)

2. FILL ENGINE COOLANT

(a) Slowly fill the system with coolant.

- Use of improper coolants may damage engine cooling system.
- Use ”Toyota Long life Coolant” or equivalent and mix it with plan water according to the manufacturer’s directions.
- Using of coolant which includes more than 50 % (freezing protection down to -35˚C (-31˚F) or 60 % (freezing protection down to -50˚C (-58˚F)) of ethylene-glycol is recommended but not more than 70 %.

NOTICE:

- **Do not use an alcohol type coolant or plain water alone.**
- **The coolant should be mixed with plain water (preferably demineralized water or distilled water).**
  Capacity: 9.0 liters (9.5 US qts, 7.9 lmp. qts)

(b) Install the radiator cap.

(c) Start the engine, and bleed the cooling system.

(d) If necessary, refill coolant into the reservoir up to the ”FULL” line.

3. CHECK ENGINE COOLANT FOR LEAKS

4. CHECK ENGINE COOLANT SPECIFIC GRAVITY CORRECTLY

CO0WV-01

COMPONENTS

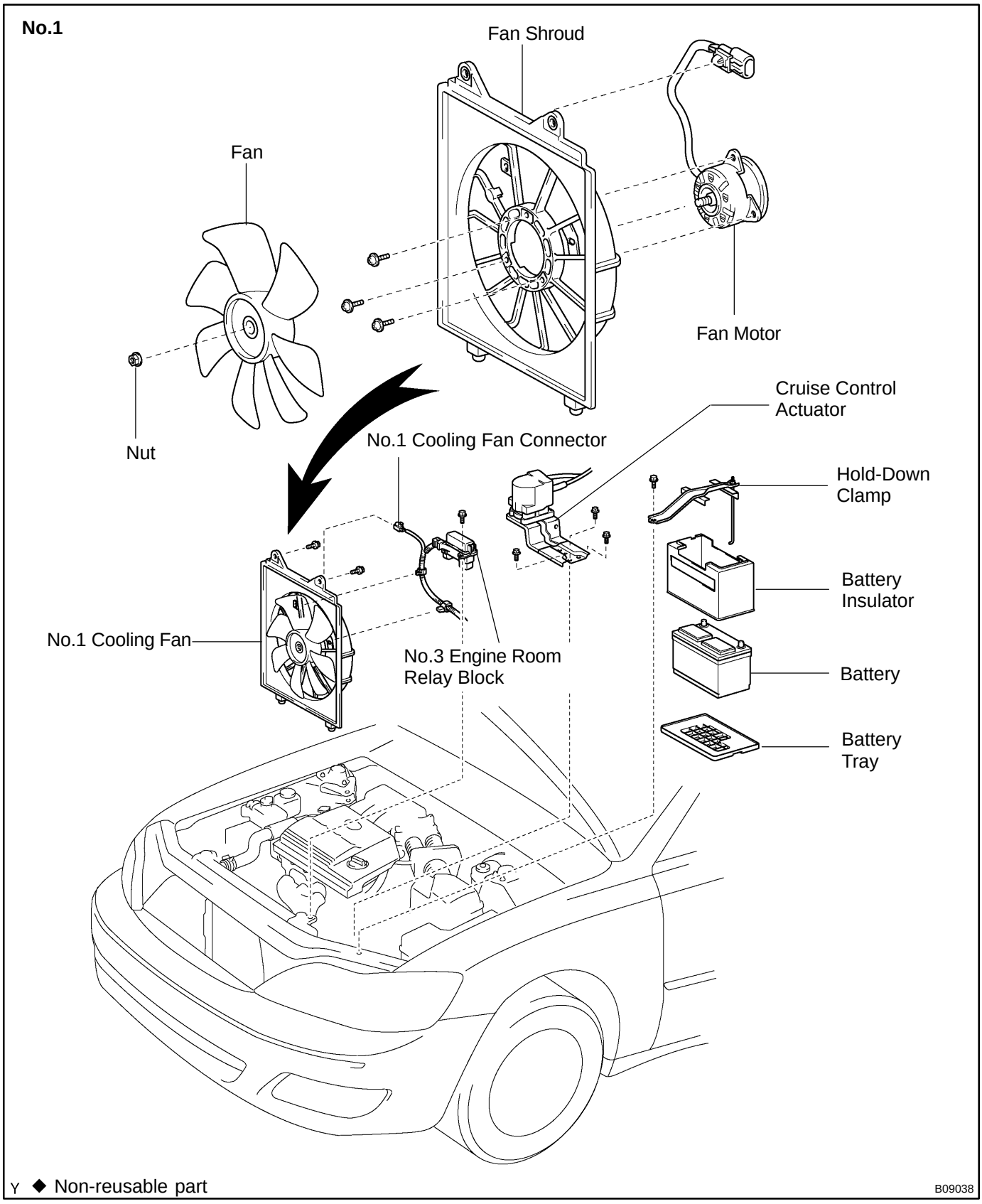

No.2

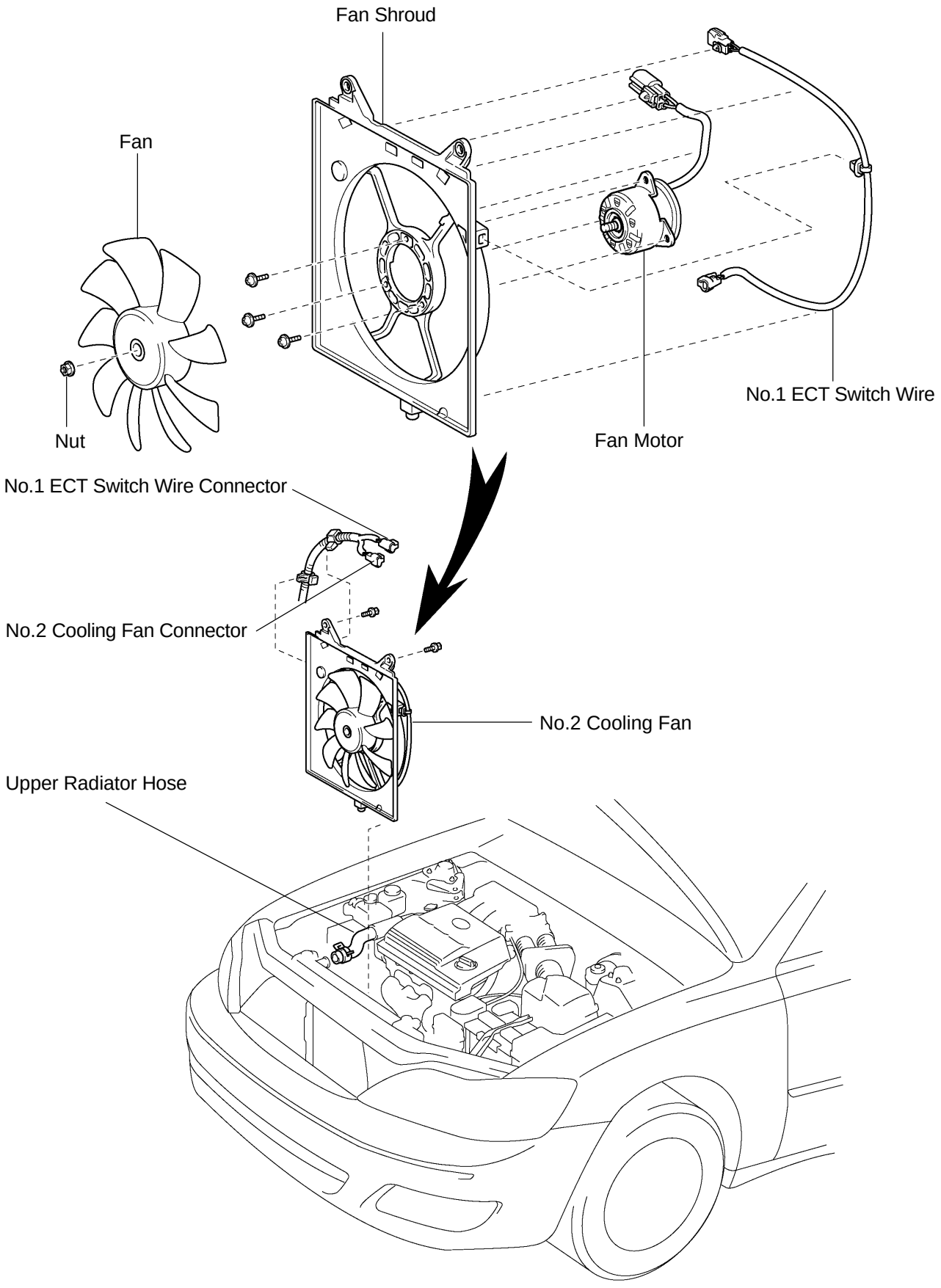

Y ◆ Non-reusable part

B09037

CO09R-02

INSTALLATION

Installation is in the reverse order of removal. (See page CO-27)

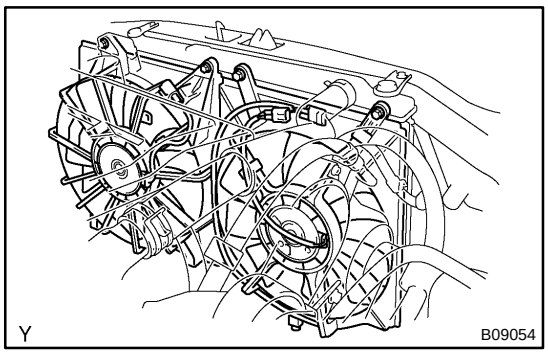

ELECTRIC COOLING FAN

CO0WU-01

ON-VEHICLE INSPECTION

1. CHECK COOLING FAN OPERATION WITH LOW TEMPERATURE (Below 83˚C (181˚F))

(a) Turn the ignition switch ON.

(b) Check that the cooling fans stop.

If not, check the cooling fan relays and ECT switches.

(c) Disconnect the No.1 ECT switch wire connector.

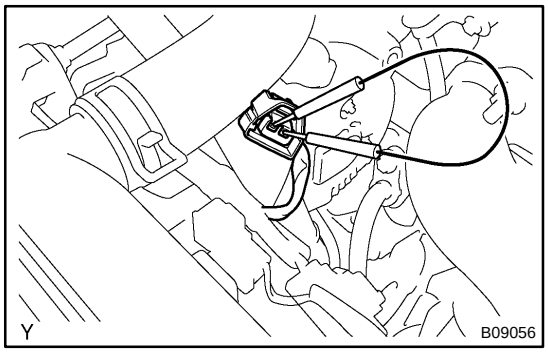

(d) Connect terminals on the No.1 ECT switch wire connector.

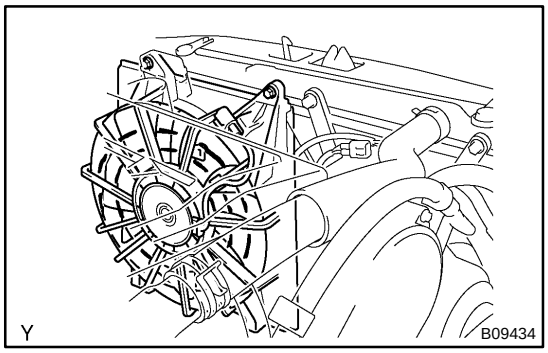

(e) Check that the No.1 cooling fan rotates at high speed.

If not, check the No.1 cooling fan relay and No.1 cooling fan.

(f) Reconnect the No.1 ECT switch connector.

(g) Disconnect the No.2 ECT switch connector.

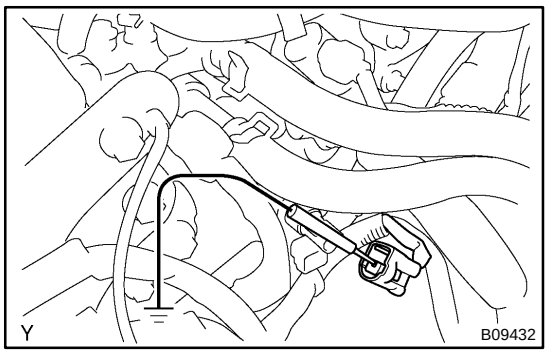

(h) Ground terminal on the No.2 ECT switch wire harness side connector.

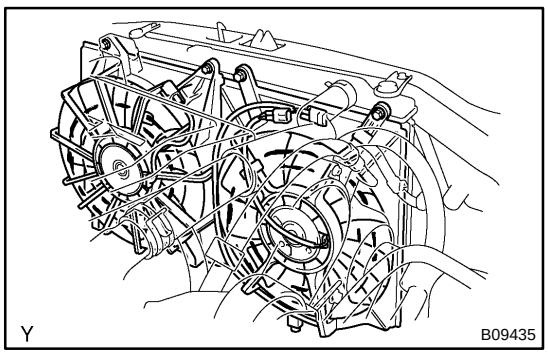

(i) Check that the No.1 and No.2 cooling fans rotate at low speed.

If not, check the No.2 cooling fan relay, No.3 cooling fan relay and No.2 cooling fan.

(j) Reconnect the No.2 ECT switch connector.

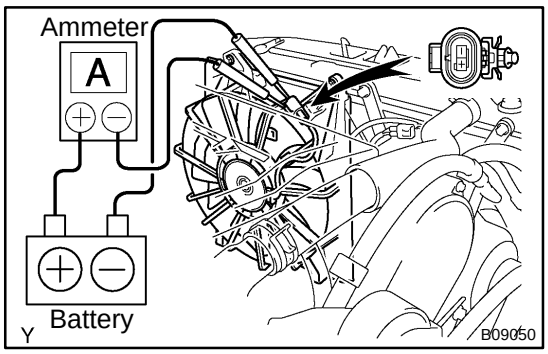

2. INSPECT NO.1 COOLING FAN

(a) Disconnect the cooling fan connector.

(b) Connect battery and ammeter to the cooling fan connector.

(c) Check that the cooling fan rotates smoothly, and check the reading on the ammeter.

Standard amperage: 8.5 - 11.5 A at 20˚C (68˚F)

(d) Reconnect the cooling fan connector.

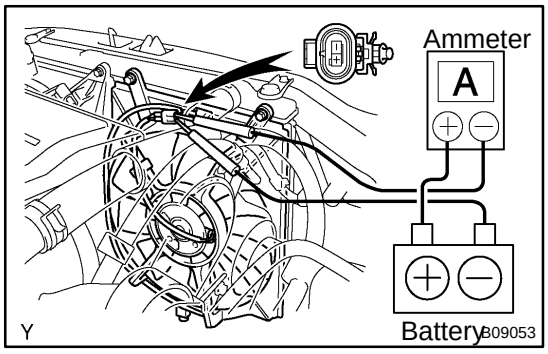

3. INSPECT NO.2 COOLING FAN

(a) Disconnect the cooling fan connector.

(b) Connect battery and ammeter to the cooling fan connector.

(c) Check that the cooling fan rotates smoothly, and check the reading on the ammeter.

Standard amperage: 8.5 - 11.5 A at 20˚C (68˚F)

(d) Reconnect the cooling fan connector.

CO09O-02

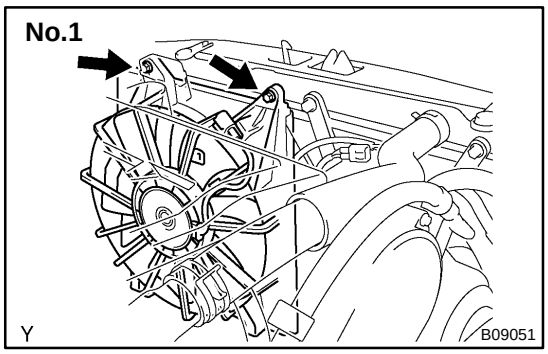

REMOVAL

REMOVE COOLING FANS

(a) Remove the No.1 cooling fan.
  (1) Remove the batter and battery tray.
  (2) Disconnect the cruise control actuator.
  (3) Disconnect the No.3 engine room relay block from radiator.
  (4) Disconnect the cooling fan connector.
  (5) Disconnect the wire clamps from the fan shroud.
  (6) Remove the 2 bolts and cooling fan.

Torque: 5.0 N·m (50 kgf·cm, 44 in.·lbf)

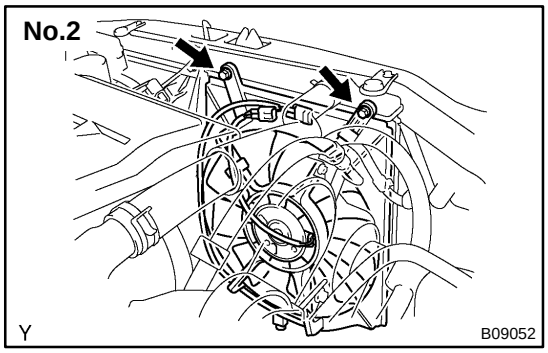

(b) Remove the No.2 cooling fan.
  (1) Drain the engine coolant.
  (2) Disconnect the upper radiator hose from the radiator.
  (3) Disconnect the cooling fan and No.1 ECT switch wire connectors.
  (4) Disconnect the wire clamps from the fan shroud.
  (5) Disconnect the No.1 ECT switch connector.
  (6) Remove the 2 bolts and cooling fan.

Torque: 5.0 N·m (50 kgf·cm, 44 in.·lbf)

ENGINE COOLANT TEMPERATURE (ECT) SWITCH

CO037-03

INSPECTION

1. DRAIN ENGINE COOLANT

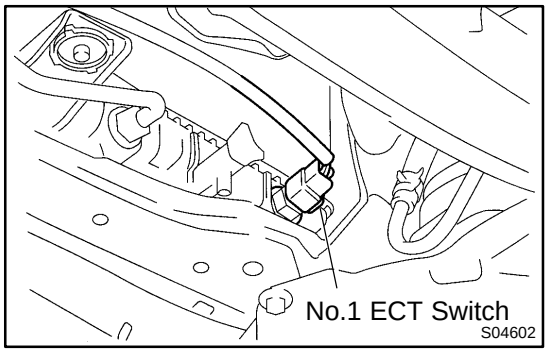

2. INSPECT NO.1 ECT SWITCH

(a) Remove the No.1 ECT switch.

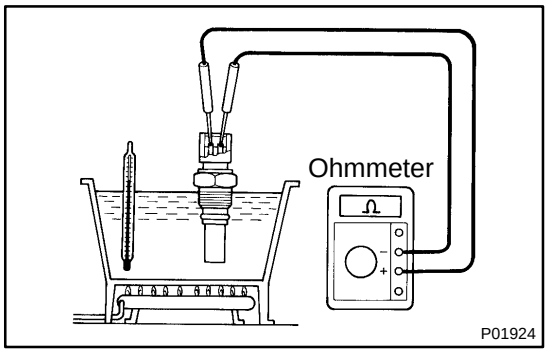

(b) Inspect the No.1 ECT switch.

(1) Using an ohmmeter, check that there is continuity between the terminals when the coolant temperature is above 98˚C (208˚F).

If there is no continuity, replace the switch.

(2) Check that there is no continuity, between the terminals when the coolant temperature is below 88˚C (190˚F).

If there is continuity, replace the switch.

(c) Reinstall the No.1 ECT switch.

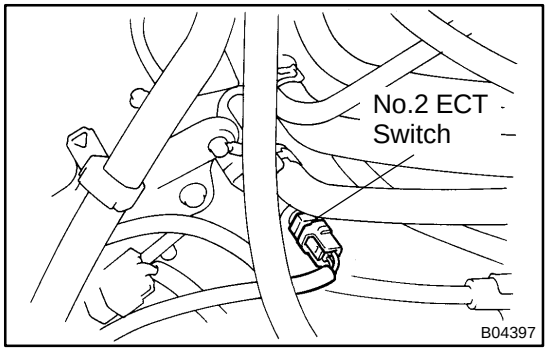

3. INSPECT NO.2 ECT SWITCH

(a) Remove the No.2 ECT switch.

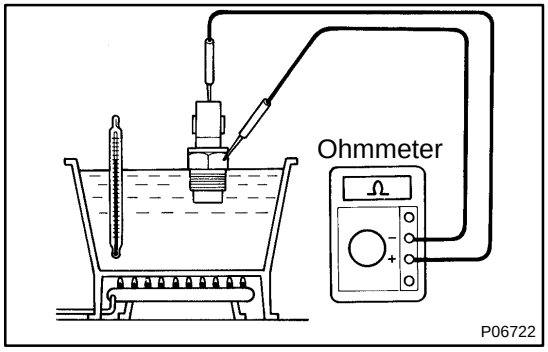

(b) Inspect the No.2 ECT switch.

(1) Using an ohmmeter, check that there is continuity between terminals when the coolant temperature is above 93˚C (199˚F).

If there is no continuity, replace the switch.

(2) Check that there is no continuity between the terminals when the coolant temperature is below 83˚C (181˚F).

If there is continuity, replace the switch.

(c) Reinstall the No.2 ECT switch.

4. REFILL ENGINE COOLANT
5. START ENGINE AND CHECK FOR COOLANT LEAKS

CO02W-03

COMPONENTS

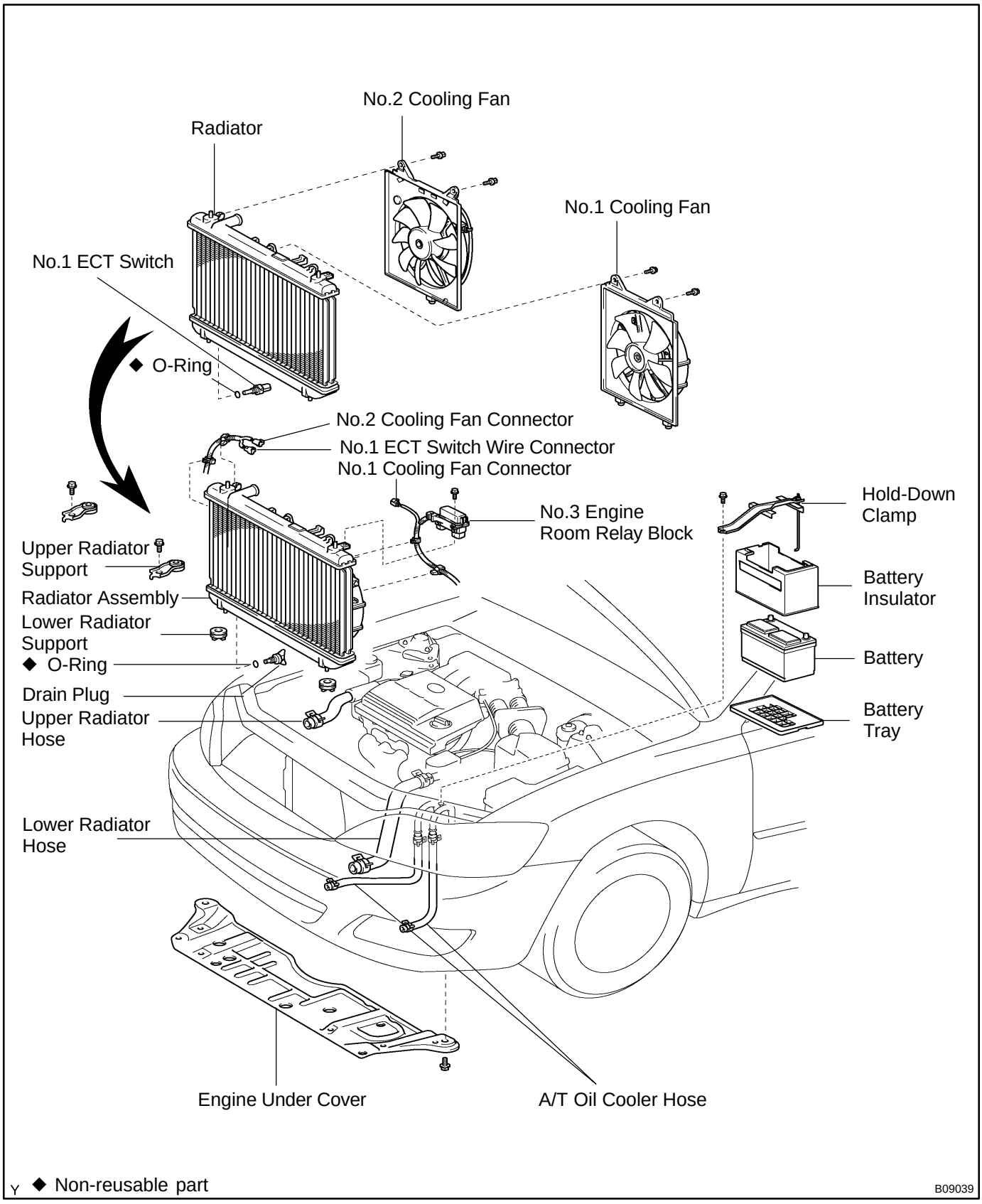

Y ◆ Non-reusable part

B09039

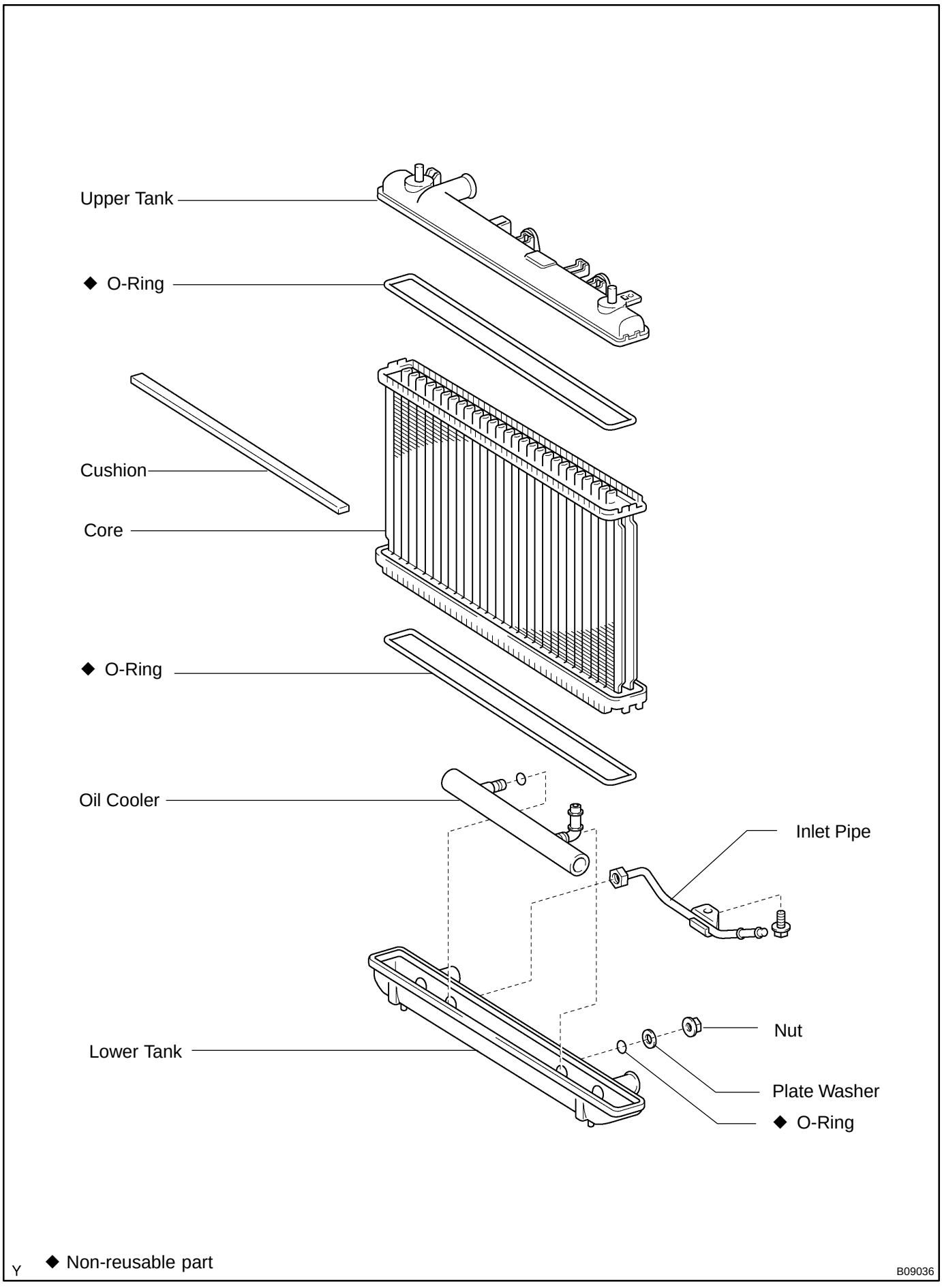
Upper Tank
◆ O-Ring
Cushion
Core
◆ O-Ring
Oil Cooler
Inlet Pipe
Lower Tank
Nut
Plate Washer
◆ O-Ring
Y
◆ Non-reusable part
B09036

CO02Y-03

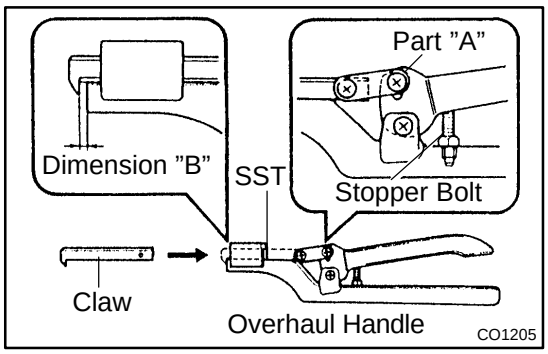

DISASSEMBLY

1. REMOVE CUSHION FROM RADIATOR

2. ASSEMBLE SST

SST 09230-01010

(a) Install the claw to the overhaul handle, inserting it in the hole in part "A" as shown in the diagram.

(b) While gripping the handle, adjust the stopper bolt so that dimension "B" shown in the diagram is 0.2 - 0.5 mm (0.008 - 0.020 in.).

NOTICE:

If this adjustment is not done, the claw may be damaged.

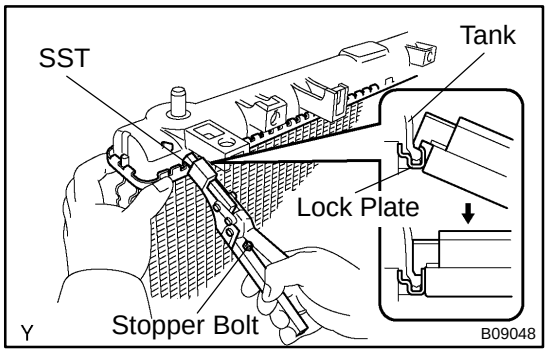

3. UNCAULK LOCK PLATES

Using SST to release the caulking, squeeze the handle until stopped by the stopper bolt.

SST 09230-01010

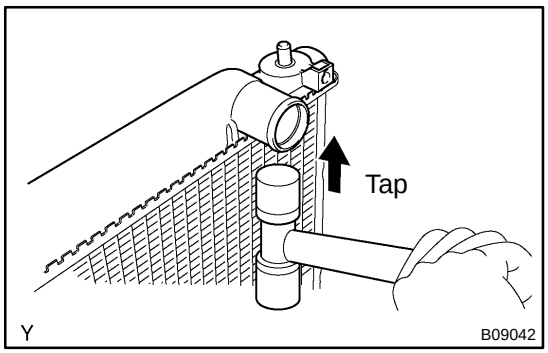

4. REMOVE TANKS AND O-RINGS

(a) Lightly tap the bracket of the radiator (or radiator hose inlet or outlet) with a soft-faced hammer and remove the tank.

(b) Remove the O-ring.

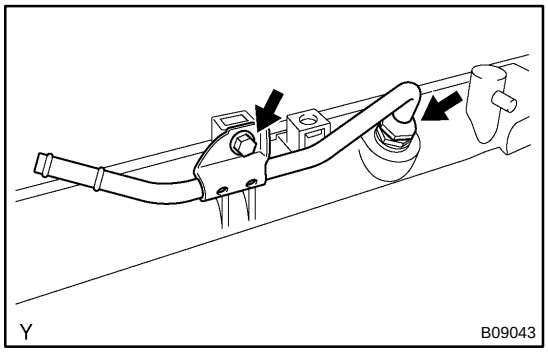

5. REMOVE OIL COOLER FROM LOWER TANK

(a) Remove the pipe.

(b) Remove the nuts and plate washers.

(c) Remove the oil cooler and O-rings.

CO030-01

INSTALLATION

Installation is in the reverse order of removal (See page CO-17).

RADIATOR

CO09H-01

ON-VEHICLE CLEANING

Using water or a steam cleaner, remove any mud or dirt from the radiator core.

NOTICE:

If using a high pressure type cleaner, be careful not to deform the fins of the radiator core. (i.e. Maintain a distance between the cleaner nozzle and radiator core)

CO09I-02

ON-VEHICLE INSPECTION

1. REMOVE RADIATOR CAP

CAUTION:

To avoid the danger of being burned, do not remove the radiator cap while the engine and radiator are still hot, as fluid and steam can be blow out under pressure.

2. INSPECT RADIATOR CAP

NOTICE:

- **If the radiator cap has contaminations, always rinse it with water.**
- **When performing steps (a) and (b) below, keep the radiator cap tester at an angle of over 30˚ above the horizontal.**
- **Before using a radiator cap tester, wet the relief valve and pressure valve with engine coolant or water.**

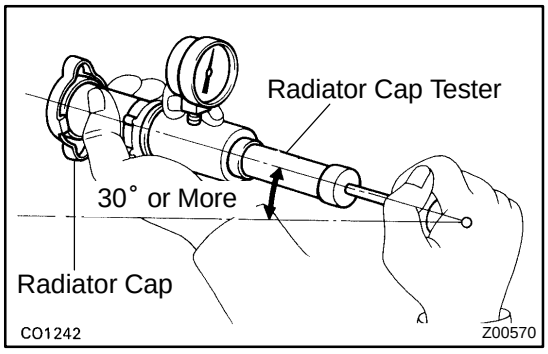

(a) Using a radiator cap tester, slowly pump the tester and check that air is coming from the vacuum valve.

Pump speed: 1 push/(3 seconds or more)

NOTICE:

Push the pump at a constant speed.

If air is not coming from the vacuum valve, replace the radiator cap.

(b) Pump the tester and measure the relief valve opening pressure.

Pump speed: 1 push within 1 second

NOTICE:

This pump speed is for the first pump only (in order to close the vacuum valve). After this, the pump speed can be reduced.

Standard opening pressure:
83 - 113 kPa (0.85 - 1.15 kgf/cm^2, 12.1 - 16.4 psi)
Minimum opening pressure:
69 kPa (0.7 kgf/cm^2, 10.0 psi)

HINT:

Use the tester's maximum reading as the opening pressure.

If the opening pressure is less than minimum, replace the radiator cap.

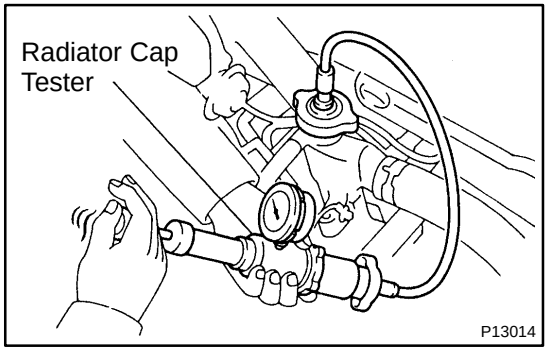

3. INSPECT COOLING SYSTEM FOR LEAKS

(a) Fill the radiator with coolant, and attach a radiator cap tester.

(b) Warm up the engine.

(c) Pump it to 127 kPa (1.3 kgf/cm^2, 18.5 psi), and check that the pressure does not drop.

If the pressure drops, check the hoses, radiator or water pump for leaks. If no external leaks are found, check the heater core, cylinder block and cylinder head.

4. REINSTALL RADIATOR CAP

CO02Z-03

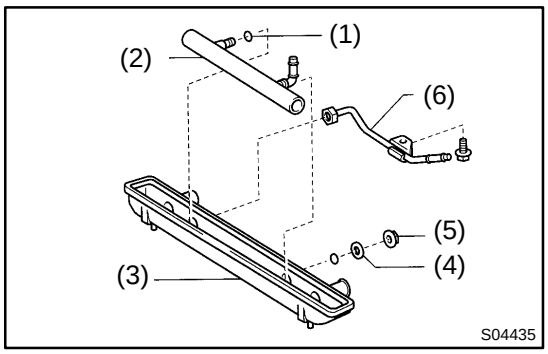

REASSEMBLY

1. INSTALL OIL COOLER TO LOWER TANK

(a) Clean the O-ring contact surface of the lower tank and oil cooler.

(b) Install a new O-rings (1) to the oil cooler (2).

(c) Install the oil cooler with the O-rings to the lower tank (3).

(d) Install the plate washers (4), and nuts (5). Torque the nuts.

Torque: 8.3 N·m (85 kgf·cm, 74 in.·lbf)

(e) Install the pipe (6).

Torque: 14.7 N·m (150 kgf·cm, 11 ft·lbf)

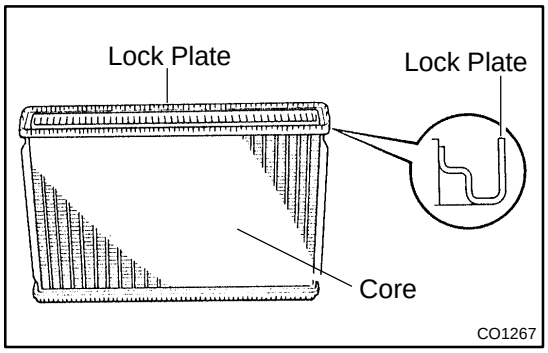

2. INSPECT LOCK PLATE

Inspect the lock plate for damage.

HINT:

- If the sides of the lock plate groove are deformed, reassembly of the tank will be impossible.
- Therefore, first correct any deformation with pliers or similar object. Water leakage will result if the bottom of the lock plate groove is damaged or dented, Therefore, repair or replace if necessary.

NOTICE:

The radiator can only be recaulked 2 times. After the 2nd time, the radiator core must be replaced.

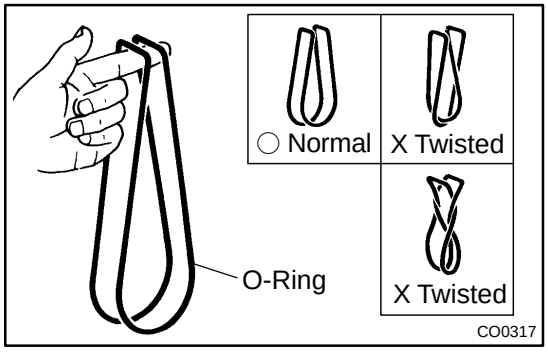

3. INSTALL NEW O-RINGS AND TANKS

(a) After checking that there are no foreign objects in the lock plate groove, install the new O-ring without twisting it.

HINT:

When cleaning the lock plate groove, lightly rub it with sand paper without scratching it.

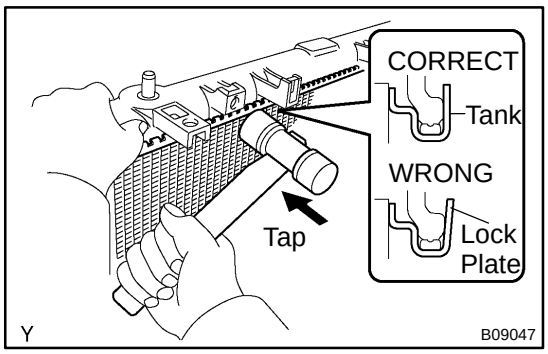

(b) Install the tank without damaging the O-ring.

(c) Tap the lock plate with a soft-faced hammer so that there is no gap between it and the tank.

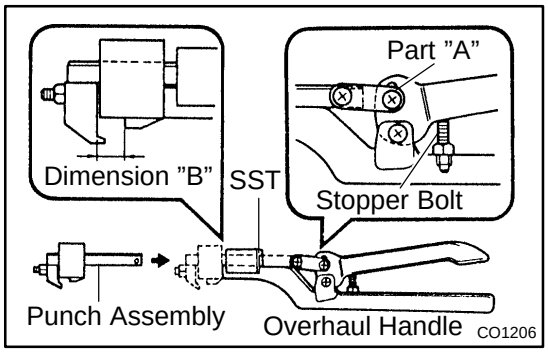

4. ASSEMBLE SST

SST 09230-01010, 09231-14010

(a) Install the punch assembly to the overhaul handle, inserting it in the hole in part "A" as shown in the illustration.

(b) While gripping the handle, adjust the stopper bolt so that dimension "B" shown in the diagram.

Dimension "B": 8.4 mm (0.34 in.)

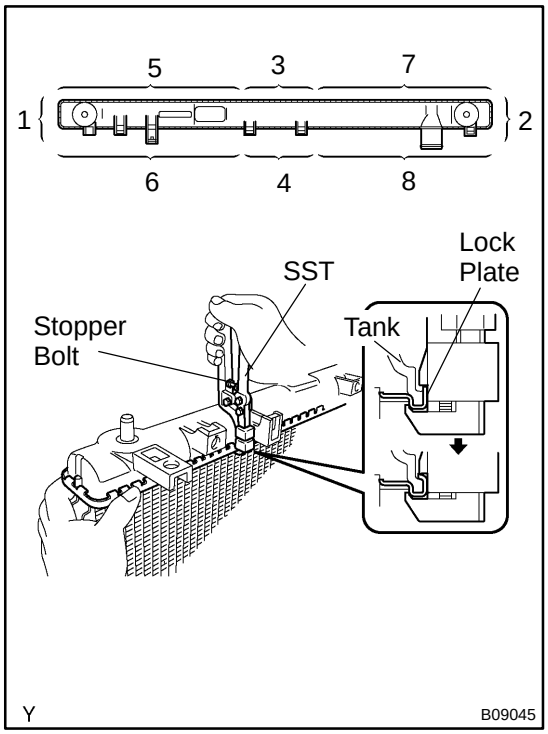

5. CAULK LOCK PLATE

(a) Lightly press SST against the lock plate in the order shown in the illustration. After repeating this a few times, fully caulk the lock plate by squeezing the handle until stopped by the stopper plate.

SST 09230-01010

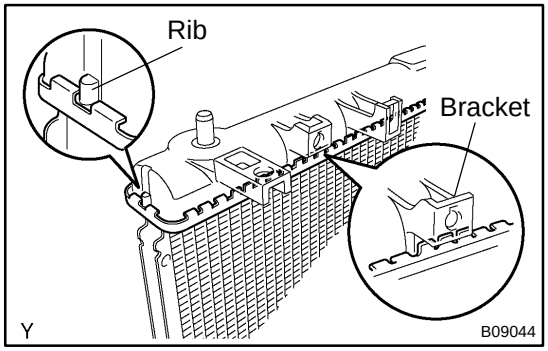

HINT:

- Do not stake the areas protruding around the pipes, brackets or tank ribs.

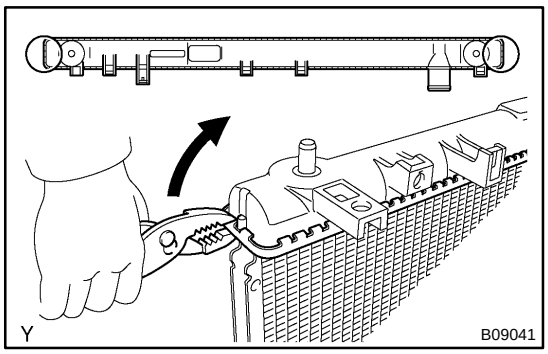

◆ The points shown in the rib sides and oil cooler near here cannot be staked with SST. Use pliers or similar object and be careful not to damage the core plates.

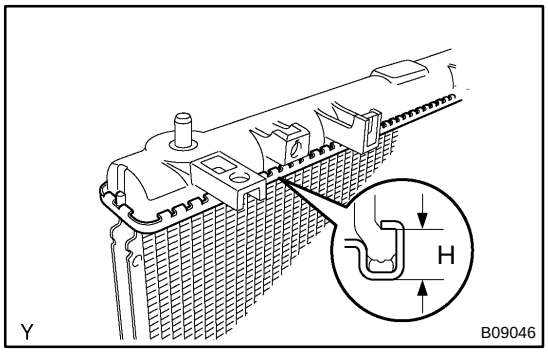

(b) Check the lock plate height (H) after completing the caulking.

Plate height (H): 7.4 - 7.8 mm (0.2959 - 0.3119 in.)

If not within the specified height, adjust the stopper bolt of the handle again and caulk again.

6. INSTALL CUSHION

CO0WT-01

REMOVAL

HINT:

At the time of installation, please refer to the following items.

- Start the engine, and check for coolant and A/T fluid leaks.
- Check the A/T fluid level (See page DI-160).

1. **REMOVE BATTERY AND BATTERY TRAY**
2. **REMOVE ENGINE UNDER COVER**
3. **DRAIN ENGINE COOLANT**
4. **DISCONNECT NO.3 ENGINE ROOM RELAY BLOCK FROM RADIATOR**
5. **DISCONNECT NO.1 COOLING FAN CONNECTOR**
6. **DISCONNECT WIRE CLAMPS FROM NO.1 FAN SHROUD**
7. **DISCONNECT NO.2 COOLING FAN CONNECTOR**
8. **DISCONNECT NO.1 ECT SWITCH WIRE CONNECTOR**
9. **DISCONNECT WIRE CLAMPS FROM NO.2 FAN SHROUD**
10. **DISCONNECT UPPER RADIATOR HOSE FROM RADIATOR**
11. **DISCONNECT LOWER RADIATOR HOSE FROM RADIATOR**
12. **DISCONNECT A/T OIL COOLER HOSES FROM RADIATOR**

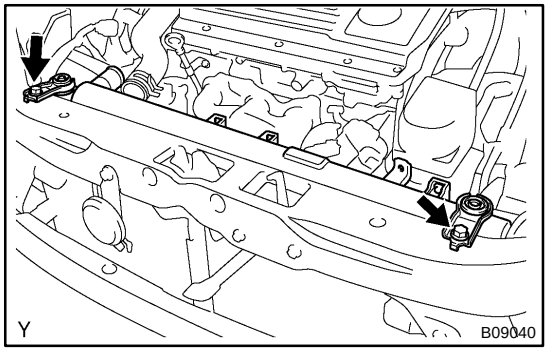

13. **REMOVE RADIATOR AND COOLING FANS ASSEMBLY**

(a) Remove the 2 bolts and 2 upper supports.

Torque: 12.8 N·m (130 kgf·cm, 9 ft·lbf)

(b) Lift out the radiator, and remove the radiator and cooling fans assembly.

(c) Remove the 2 lower supports.

14. **REMOVE NO.1 ECT SWITCH**
15. **REMOVE NO.1 COOLING FAN FROM RADIATOR**

Remove the 2 bolts and cooling fan.

Torque: 5.0 N·m (50 kgf·cm, 44 in.·lbf)

16. **REMOVE NO.2 COOLING FAN FROM RADIATOR**

Remove the 2 bolts and cooling fan.

Torque: 5.0 N·m (50 kgf·cm, 44 in.·lbf)

THERMOSTAT

COMPONENTS

CO02Q-03

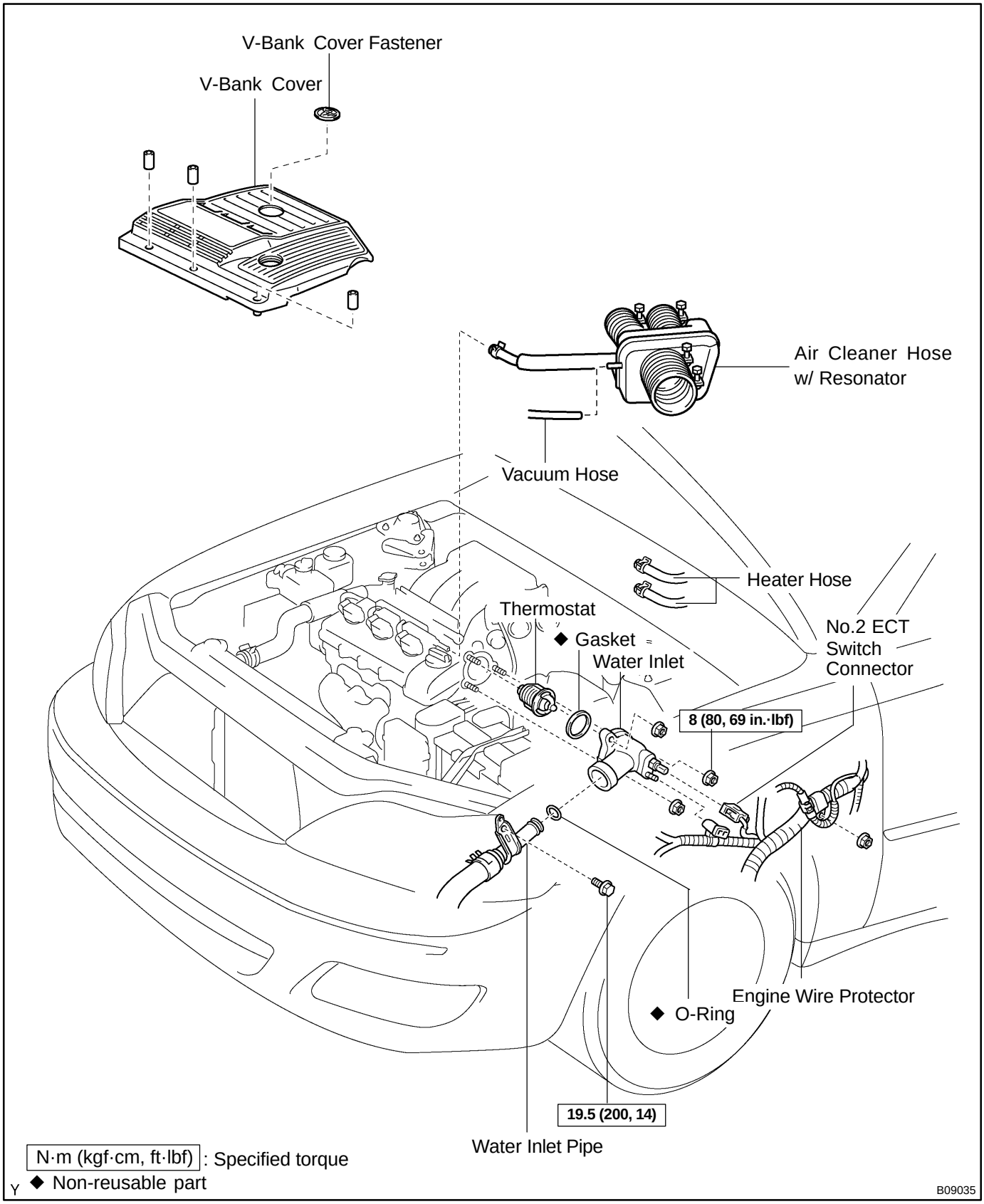

CO02S-03

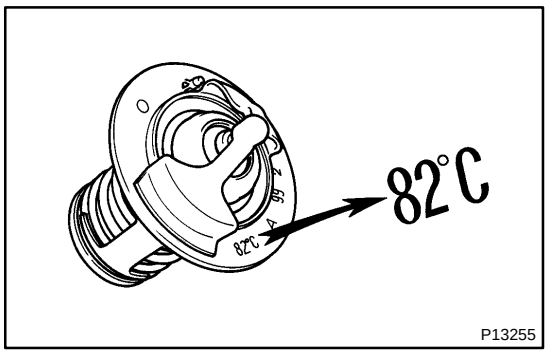

INSPECTION

INSPECT THERMOSTAT

HINT:

The thermostat is numbered with the valve opening temperature.

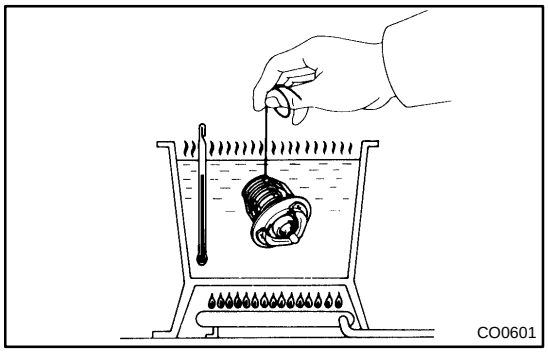

(a) Immerse the thermostat in water and gradually heat the water.

(b) Check the valve opening temperature.

Valve opening temperature:
80 - 84˚C (176 - 183˚F)

If the valve opening temperature is not as specified, replace the thermostat.

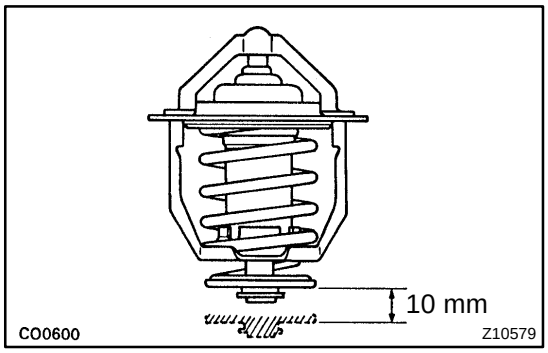

(c) Check the valve lift.

Valve lift: 10.0 mm (0.394 in.) or more at 95˚C (203˚F)

If the valve lift is not as specified, replace the thermostat.

(d) Check that the valve is fully closed when the thermostat is at low temperatures (below 40˚C (104˚F)).

If not closed, replace the thermostat.

CO02T-03

INSTALLATION

1. PLACE THERMOSTAT IN WATER PUMP

(a) Install a new gasket on to the thermostat.

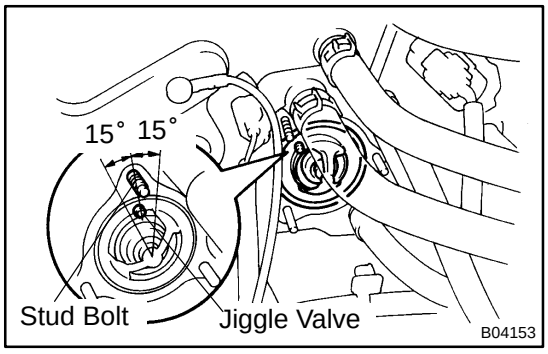

(b) Align the thermostat jiggle valve with the upper stud bolt, and insert the thermostat in the water inlet housing.

HINT:

The jiggle valve may be set within 15° of either side of the prescribed position.

2. INSTALL WATER INLET

Install the water inlet with the 3 nuts.

Torque: 8 N·m (80 kgf·cm, 69 in.·lbf)

3. INSTALL WATER INLET PIPE

(a) Install a new O-ring to the water inlet pipe.

(b) Apply soapy water to the O-ring.

(c) Connect the water inlet pipe to the water inlet.

(d) Install the bolt holding the water inlet pipe to the LH cylinder head.

Torque: 19.5 N·m (200 kgf·cm, 14 ft·lbf)

4. INSTALL ENGINE WIRE PROTECTOR

5. CONNECT NO.2 ECT SWITCH CONNECTOR

6. CONNECT HEATER HOSES

7. REINSTALL AIR CLEANER HOSE WITH RESONATOR

8. INSTALL V-BANK COVER

(a) Using 5 mm hexagon wrench, install the V-bank cover with the 3 cap nuts.

(b) Press down the V-bank cover fastener.

9. FILL WITH ENGINE COOLANT

10. START ENGINE AND CHECK FOR LEAKS

11. RECHECK ENGINE COOLANT LEVEL

CO0SW-02

REMOVAL

HINT:

Removal of the thermostat would have an adverse effect, causing a lowering of cooling efficiency. Do not remove the thermostat, even if the engine tends to overheat.

1. DRAIN ENGINE COOLANT

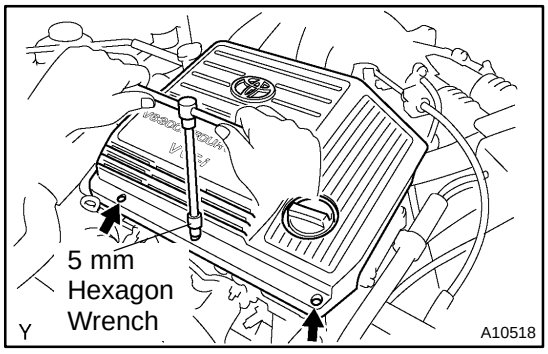

2. REMOVE V-BANK COVER

(a) Using a 5 mm hexagon wrench, remove the 3 cap nuts.

(b) Loosen the V-bank cover fastener counterclockwise.

(c) Remove the V-bank cover.

3. WARM UP ENGINE

Allow the engine to warm up to normal operating temperature.

4. REMOVE AIR CLEANER HOSE WITH RESONATOR

5. DISCONNECT HEATER HOSES

6. DISCONNECT NO.2 ECT SWITCH CONNECTOR

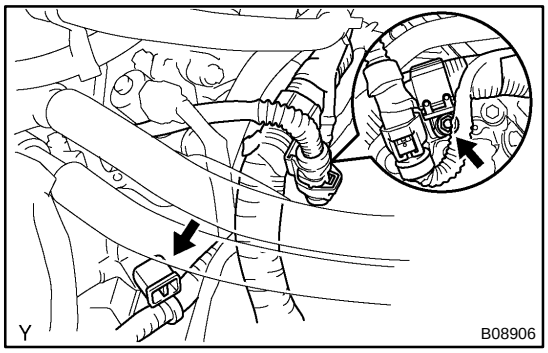

7. DISCONNECT ENGINE WIRE PROTECTOR FROM WATER INLET AND RH CYLINDER HEAD

Remove the nut and disconnect the clamp, and disconnect the engine wire protector from the water inlet and cylinder head.

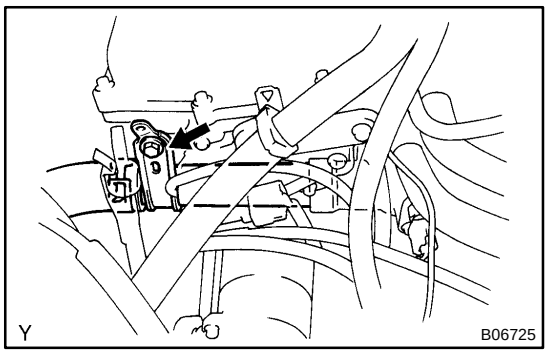

8. DISCONNECT WATER INLET PIPE FROM WATER INLET AND LH CYLINDER HEAD

(a) Remove the bolt, and disconnect the inlet pipe from the water inlet.

(b) Remove the O-ring from the inlet pipe.

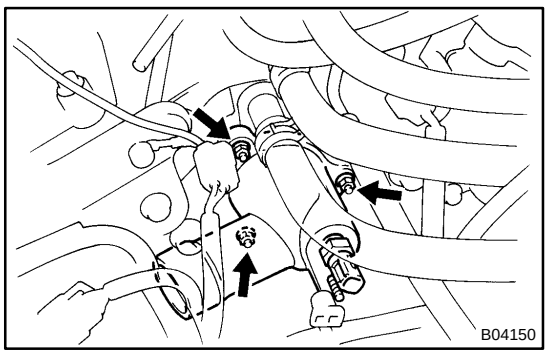

9. REMOVE WATER INLET AND THERMOSTAT

(a) Remove the 3 nuts, water inlet and thermostat.

(b) Remove the gasket from the thermostat.

WATER PUMP

COMPONENTS

CO02M-03

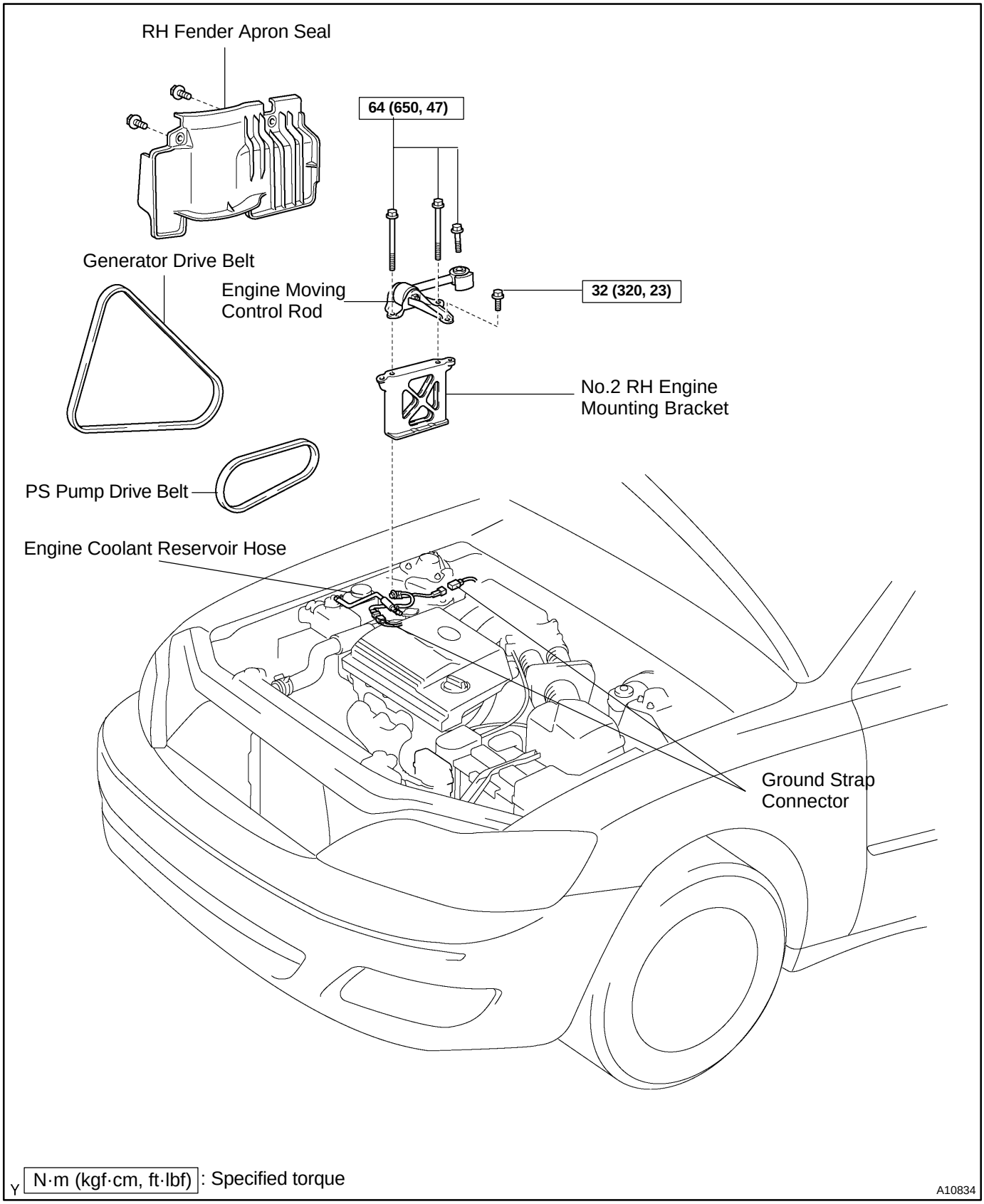

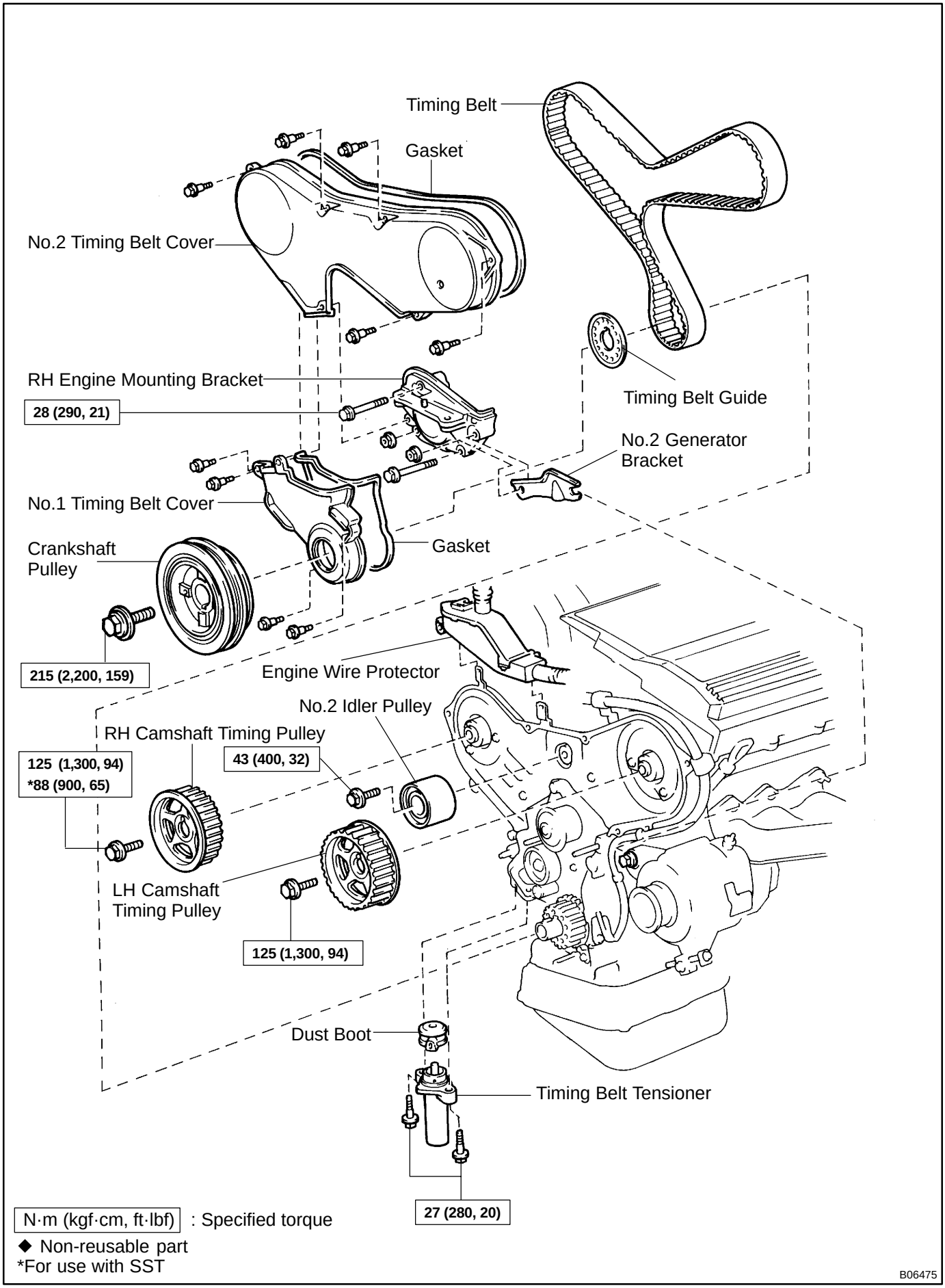
Timing Belt
Gasket
No.2 Timing Belt Cover
RH Engine Mounting Bracket
28 (290, 21)
Timing Belt Guide
No.2 Generator Bracket
No.1 Timing Belt Cover
Gasket
Crankshaft Pulley
215 (2,200, 159)
Engine Wire Protector
No.2 Idler Pulley
RH Camshaft Timing Pulley
125 (1,300, 94)
*88 (900, 65)
43 (400, 32)
LH Camshaft Timing Pulley
125 (1,300, 94)
Dust Boot
Timing Belt Tensioner
27 (280, 20)
N·m (kgf·cm, ft·lbf) : Specified torque
◆ Non-reusable part
*For use with SST
B06475

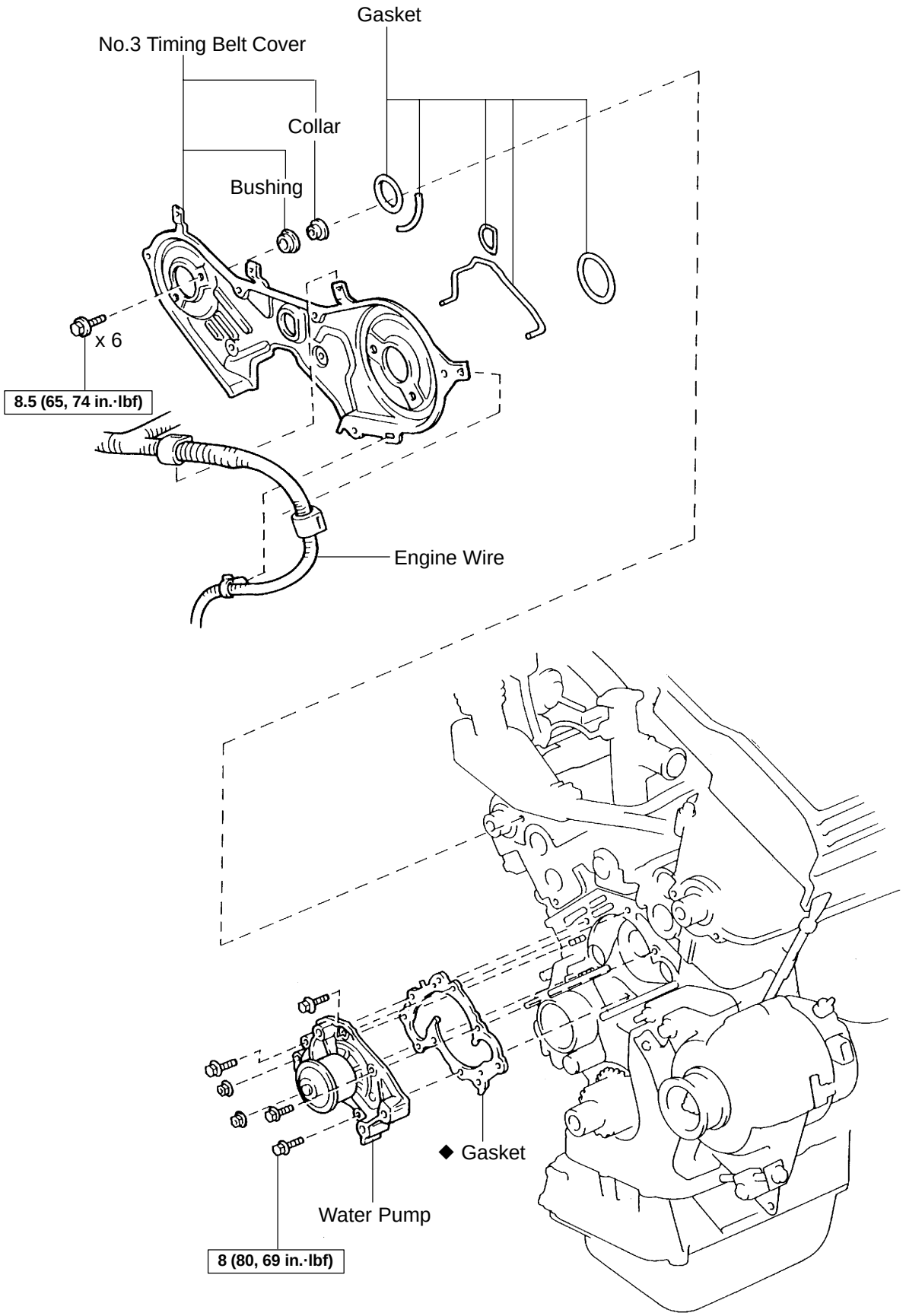

N·m (kgf·cm, ft·lbf) : Specified torque
◆ Non-reusable part

B06476

CO02O-03

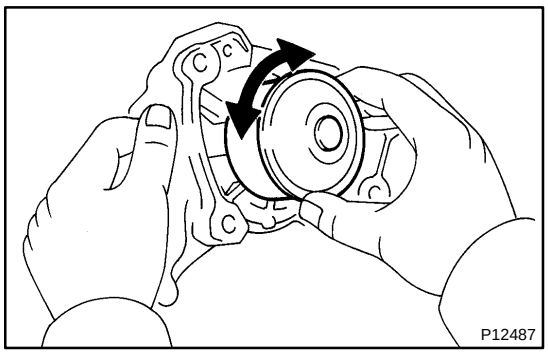

INSPECTION

1. INSPECT WATER PUMP

(a) Visually check the drain hole for coolant leakage.

If leakage is found, replace the water pump.

(b) Turn the pulley, and check that the water pump bearing moves smoothly and quietly.

If necessary, replace the water pump.

2. INSPECT TIMING BELT COMPONENTS

(See page EM-19)

CO02P-03

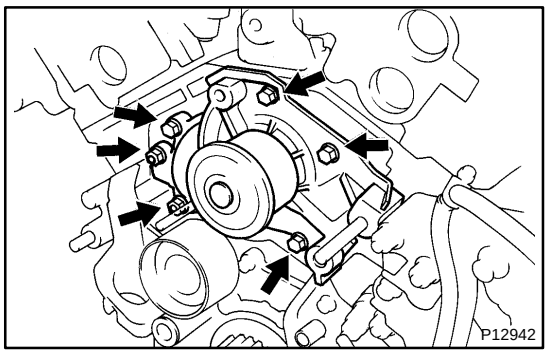

INSTALLATION

1. INSTALL WATER PUMP

Install a new gasket and the water pump with the 4 bolts and 2 nuts.

Torque: 8 N·m (80 kgf·cm, 69 in.·lbf)

NOTICE:

Do not get oil on the gasket.

2. INSTALL NO.3 TIMING BELT COVER (See page EM-59)

3. INSTALL NO.2 IDLER PULLEY (See page EM-21)

4. INSTALL CAMSHAFT TIMING PULLEYS (See page EM-21)

5. INSTALL TIMING BELT (See page EM-21)

6. FILL WITH ENGINE COOLANT

7. START ENGINE AND CHECK FOR LEAKS

8. RECHECK ENGINE COOLANT LEVEL

CO0WS-01

REMOVAL

1. DRAIN ENGINE COOLANT
2. REMOVE TIMING BELT (See page EM-15)
3. REMOVE CAMSHAFT TIMING PULLEYS (See page EM-15)
4. REMOVE NO.2 IDLER PULLEY (See page EM-31)
5. REMOVE NO.3 TIMING BELT COVER (See page EM-15)

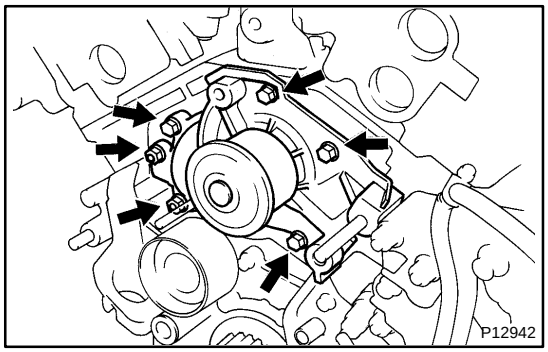

6. REMOVE WATER PUMP

Remove the 4 bolts, 2 nuts, water pump and gasket.

DI6NM-02

ABS Warning Light Circuit

CIRCUIT DESCRIPTION

If the ECU detects trouble, the ABS warning light lights up and ABS control is prohibited at the same time. At this time, the ECU records a DTC in memory.
Connecting terminals Tc and E_1 of the DLC1 makes the ABS warning light blink and output the DTC.

WIRING DIAGRAM

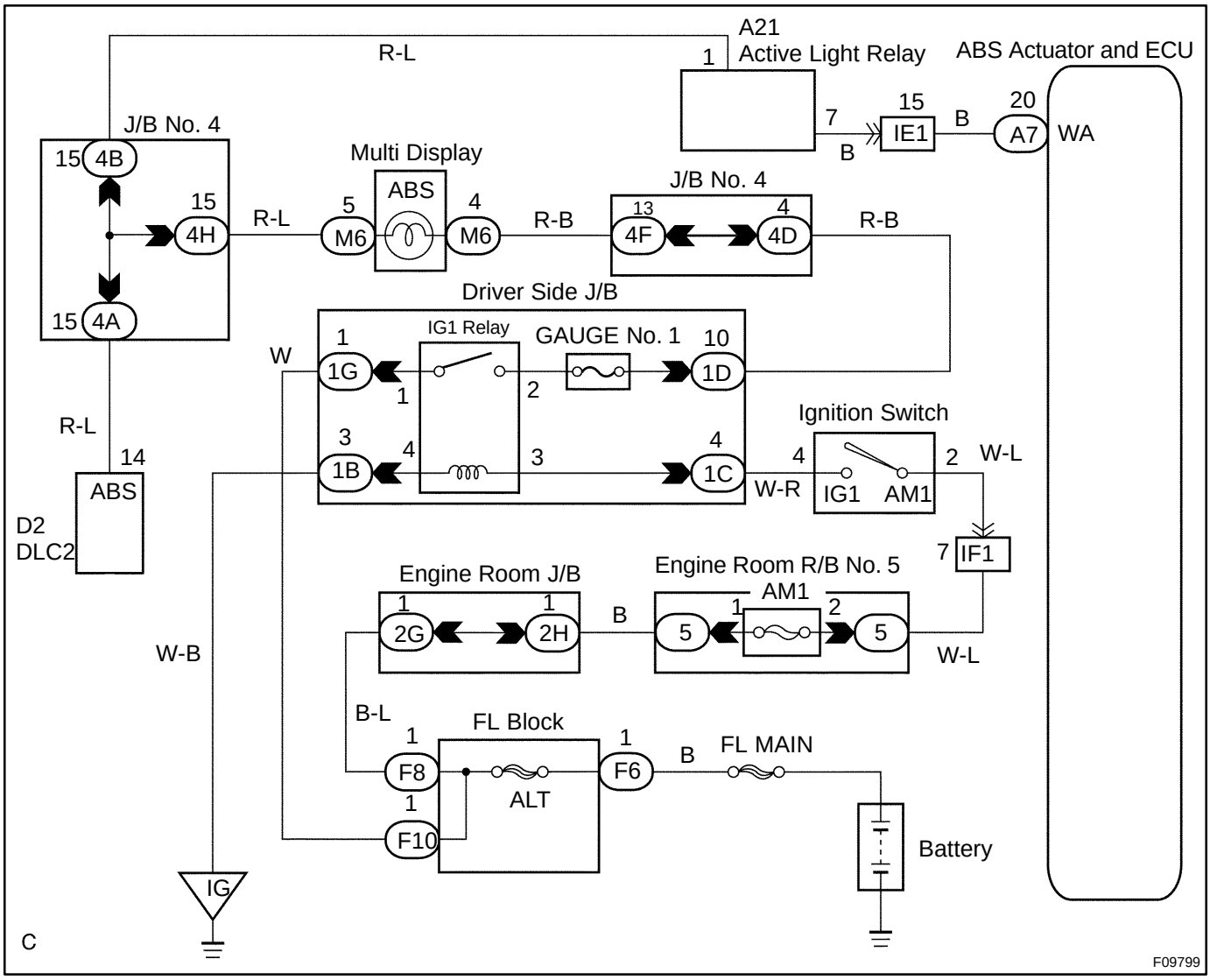

INSPECTION PROCEDURE

Troubleshooting in accordance with the chart below for each trouble symptom.

ABS warning light does not light up	Go to step 1
ABS warning light remains on	Go to step 2

1 Check ABS warning light.

See combination meter troubleshooting on page BE-2 .

NG → **Repair bulb or combination meter assembly.**

OK

2 Check active lamp relay.

NG → **Replace active lamp relay.**

OK

Check for open circuit in harness and connector between GAUGE fuse and active lamp relay, ECU-IG No. 2 fuse and active lamp relay, short circuit between active lamp relay and ABS ECU (See page IN-30).

3 Is DTC output?

Check the DTC on page DI-212 .

YES → **Repair circuit indicated by the code output.**

NO

Check for short circuit in harness and connector and active lamp relay, ECU-IG No. 2 fuse and active lamp relay, short circuit between active lamp relay and ABS ECU (See page IN-30).

DI6NK-01

DTC	Always ON	ABS ECU Malfunction

CIRCUIT DESCRIPTION

DTC No.	DTC Detecting Condition	Trouble Area
Always ON	Either of the following 1., 2. or 3. is detected: 1. The ECU connectors are OFF the ECU. 2. There is a malfunction in the ECU internal circuit. 3. There is a malfunction in ABS warning light circuit.	●Charging system ●ABS warning light circuit

INSPECTION PROCEDURE

1	**Check that the ECU connectors are securely connected to the ECU.**

NO → **Connect the connector to the ECU.**

YES

2	**Is DTC output?**

Check DTC on page DI-212 .

YES → **Repair circuit indicated by the output code.**

NO

3	**Does ABS warning light go off?**

YES → **Check for open or short circuit in harness and connector between ECU-IG fuse and ECU (See page IN-30).**

NO

4	**Check battery positive voltage.**

PREPARATION:

Start the engine.

CHECK:

Check the battery positive voltage.

OK:

Voltage: 10 - 16 V

NG → **Check and repair the charging system (See page CH-1).**

OK ↓

5	**Check operation of the ABS warning light.**

PREPARATION:

(a) Turn the ignition switch OFF.

(b) Disconnect the connector from the ABS ECU.

(c) Turn the ignition switch ON.

CHECK:

Check the ABS warning light goes on.

OK → **Check and replace combination meter (See page BE-2).**

NG ↓

6	**Check for short circuit in harness and connector between active lamp relay and ABS ECU (See page IN-30).**

NG → **Repeir or replace harness or connector.**

OK ↓

Check and replace ABS ECU.

DI6NL-02

BRAKE Warning Light Circuit

CIRCUIT DESCRIPTION

The BRAKE warning light lights up when the brake fluid is insufficient, parking brake is applied or the EBD is defective.

WIRING DIAGRAM

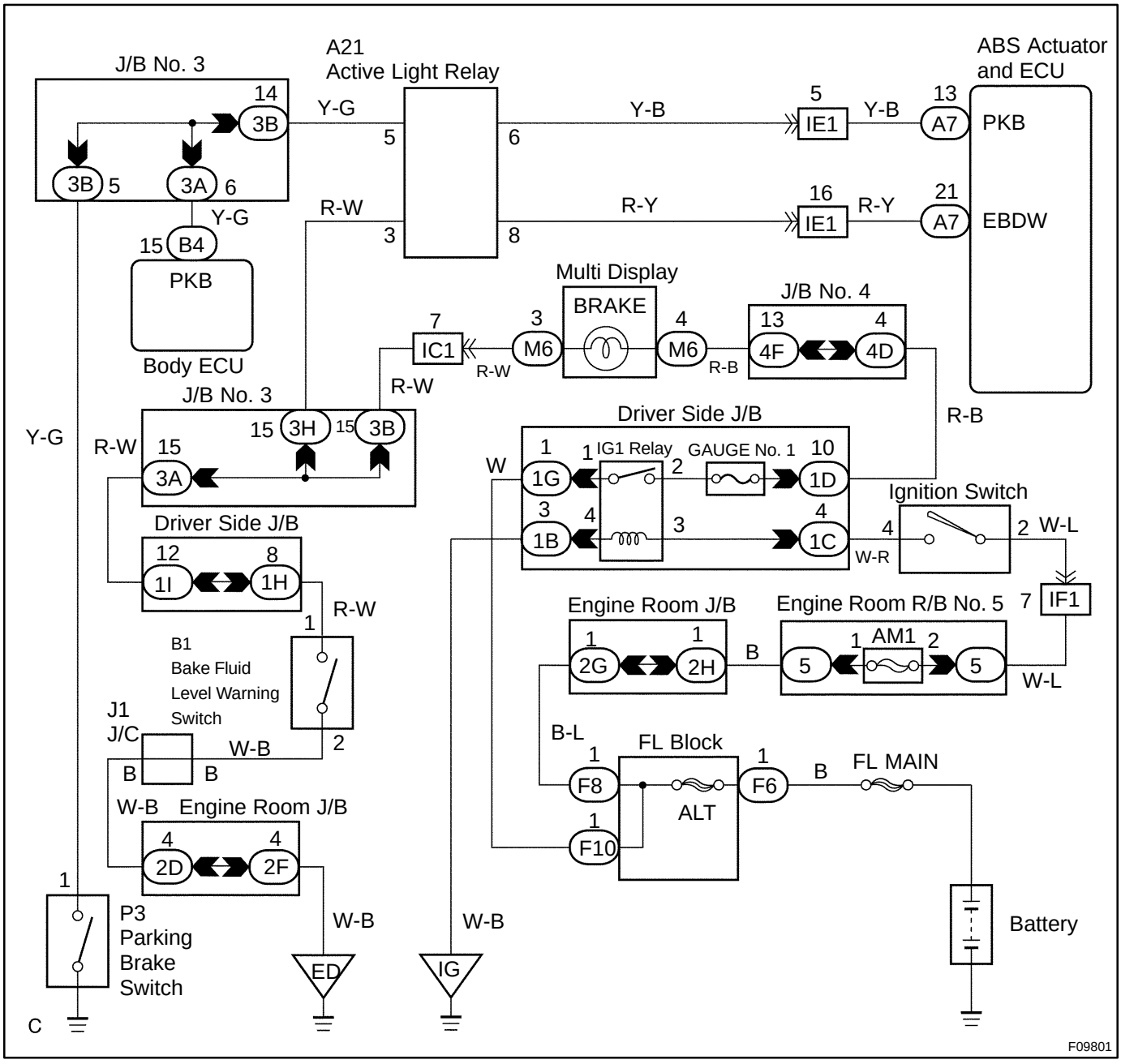

INSPECTION PROCEDURE

1	Check parking brake switch circuit (See page BE-53).

NG → Repair or replace parking brake switch circuit.

OK

2	Check brake fluid level warning switch circuit (See page BE-53).

NG → Repair or replace brake fluid level warning switch circuit.

OK

3	Is DTC output for ABS ?

Yes → Repair circuit indicated by the output code.

No

4	Check BRAKE warning light.

See combination meter troubleshooting on page BE-2 .

NG → Repair or replace combination meter.

OK

5	Check active lamp relay.

NG → Replace active lamp relay.

OK

6	Check for open or short circuit in harness and connector.

NG → Repair or replace harness or connector.

OK

Check and replace ABS ECU.

DI6NP-01

Check for Fluid Leakage

Check for fluid leakage from actuator or hydraulic lines.

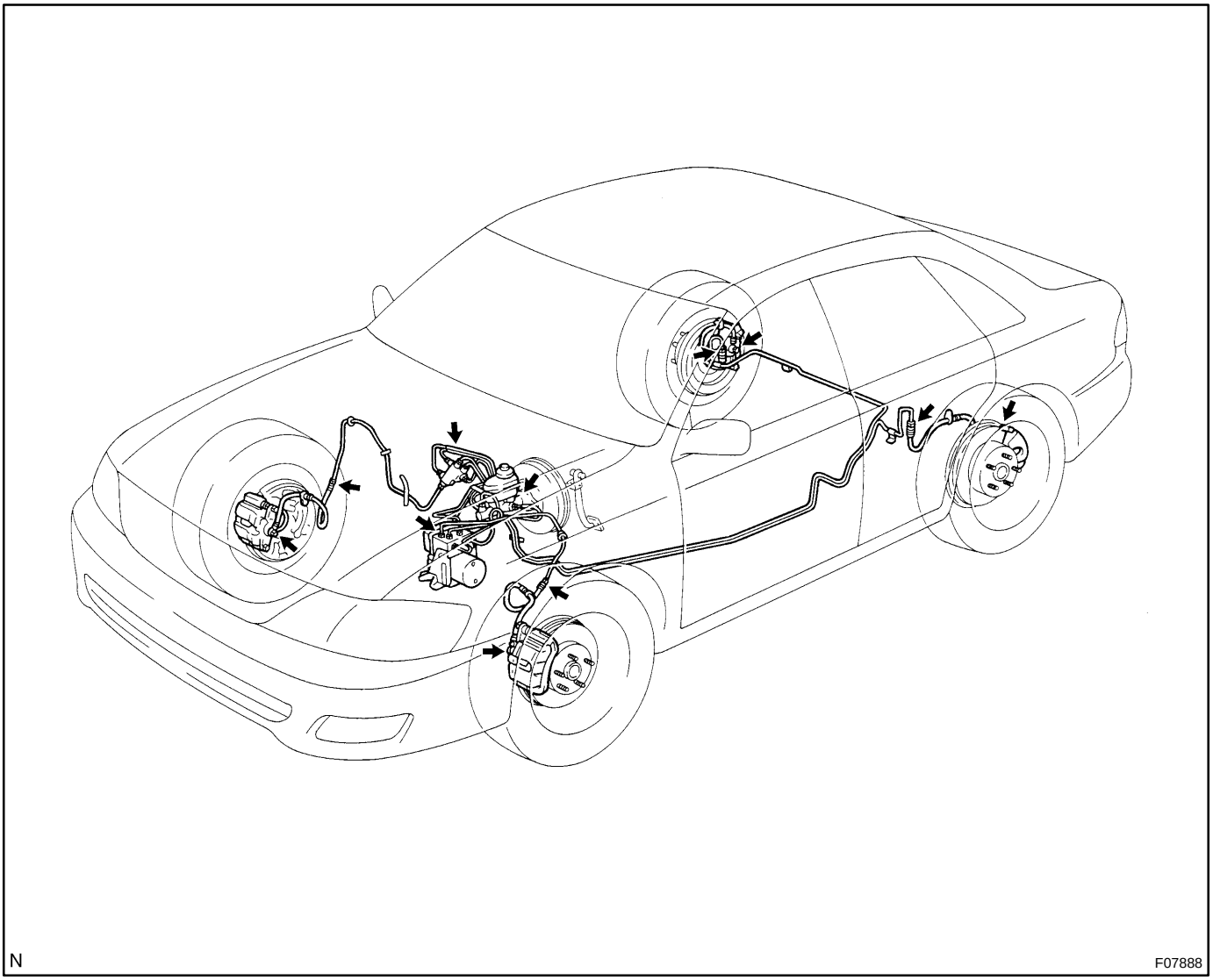

N F07888

DI6NC-01

CIRCUIT INSPECTION

DTC	11	ABS Solenoid Relay Circuit

CIRCUIT DESCRIPTION

This relay supplies power to each ABS solenoid. After the ignition switch is turned ON, if the initial check is OK, the relay goes on.

DTC No.	DTC Detecting Condition	Trouble Area
11	When any of the following 1. through 3. is detected: 1. 3 or more solenoids are shown faulty in response and simultaneously solenoid supply voltage is detected faulty. 2. Solenoid relay will not be switched OFF. 3. Solenoid relay is frozen in spite of its high valve relay supply voltage.	●ABS solenoid relay ●ABS solenoid relay circuit

WIRING DIAGRAM

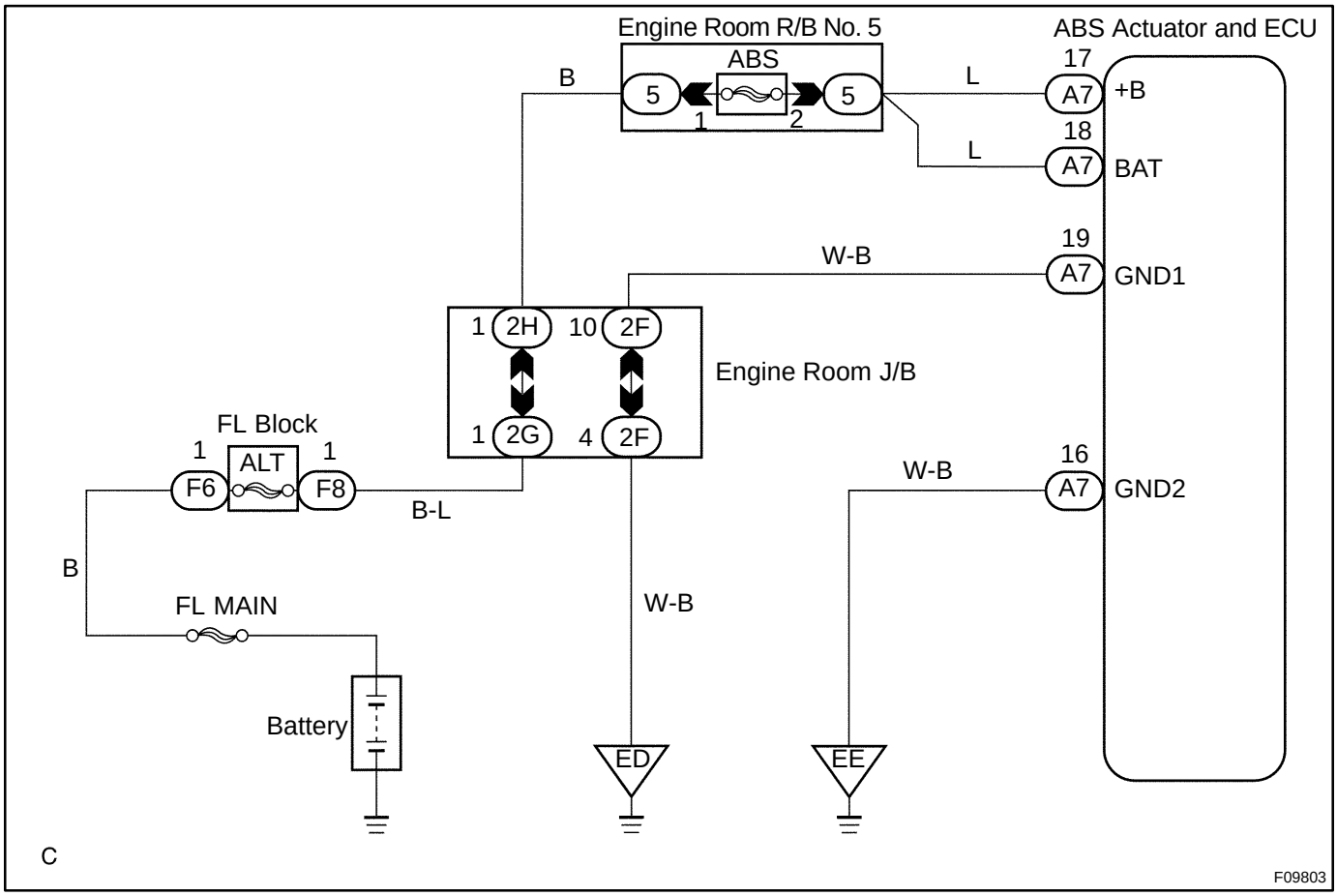

INSPECTION PROCEDURE

1	**Check voltage between terminals +B (A7 - 17, 18) and GND (A7 - 16, 19) of ABS actuator connector.**

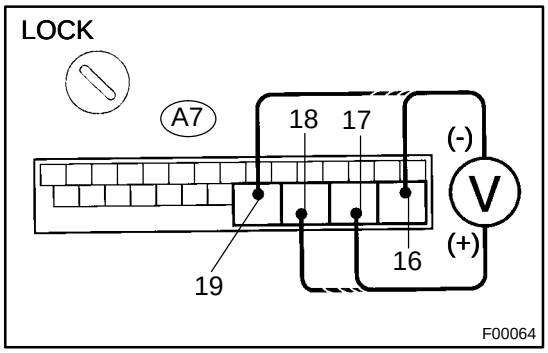

PREPARATION:

Disconnect the connector from the ABS actuator.

CHECK:

Measure the voltage between terminals A7 - 17, 18 and A7 - 16, 19 of ABS actuator harness side connector.

OK:

Voltage: 10 - 14 V

NG → **Check and replace fuses.**
Check and repair harness or connector.

OK

If the same code is still output after the DTC is deleted, check the contact condition of each connection. If the connections are normal, the ECU may be defective.

DI6ND-01

DTC	13	ABS Motor Relay Circuit

CIRCUIT DESCRIPTION

The ABS motor relay supplies power to the ABS pump motor. When the ABS is activated, the ECU switches the ABS motor relay ON and operates the ABS pump motor.

DTC No.	DTC Detecting Condition	Trouble Area
13	When any of the following 1. through 3. is detected: 1. Pump motor voltage is not supplied within 0.06 sec. after actuation of the motor relay. 2. Pump motor voltage is high, and the motor relay will not actuate for 2.5 sec. or more. 3. Pump motor voltage remains low for longer 0.4 sec. or more and the pump repeats activating for 0.7 sec. 3 times maximally. After the last activation, the pump motor is deactivated gone dead because of short circuit.	●ABS motor relay ●ABS motor relay circuit

WIRING DIAGRAM

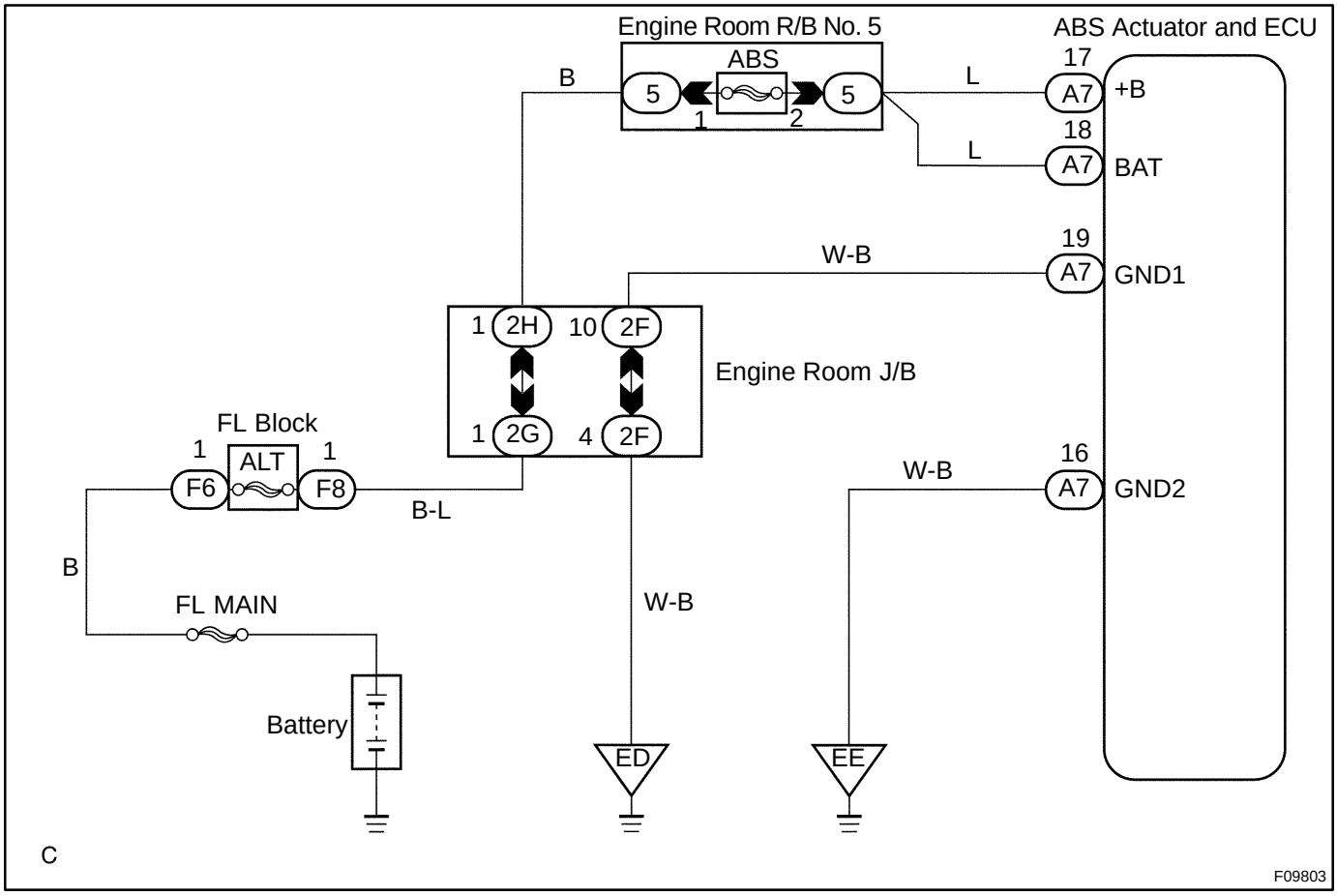

INSPECTION PROCEDURE

1	**Check voltage between terminals +B (A7 - 17, 18) and GND (A7 - 16, 19) of brake actuator connector.**

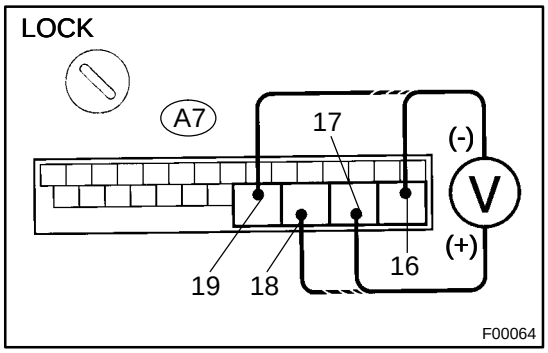

PREPARATION:

Disconnect the connector from the brake actuator.

CHECK:

Measure the voltage between terminals A7 - 17, 18 and A7 - 16, 19 of brake actuator harness side connector.

OK:

Voltage: 10 - 14 V

NG → **Check and replace fuses.**
Check and repair harness or connector.

OK

If the same code is still output after the DTC is deleted, check the contact condition of each connection. If the connections are normal, the ECU may be defective.

DI6NE-01

DTC	21 - 24	ABS Solenoid Circuit

CIRCUIT DESCRIPTION

This solenoid goes on when signals are received from the ECU, and controls the pressure acting on the wheel cylinders thus controlling the braking force.

DTC No.	DTC Detecting Condition	Trouble Area
21, 22, 23, 24	Solenoid signal does not match the check result.	●Brake actuator ●Each solenoid circuit

WIRING DIAGRAM

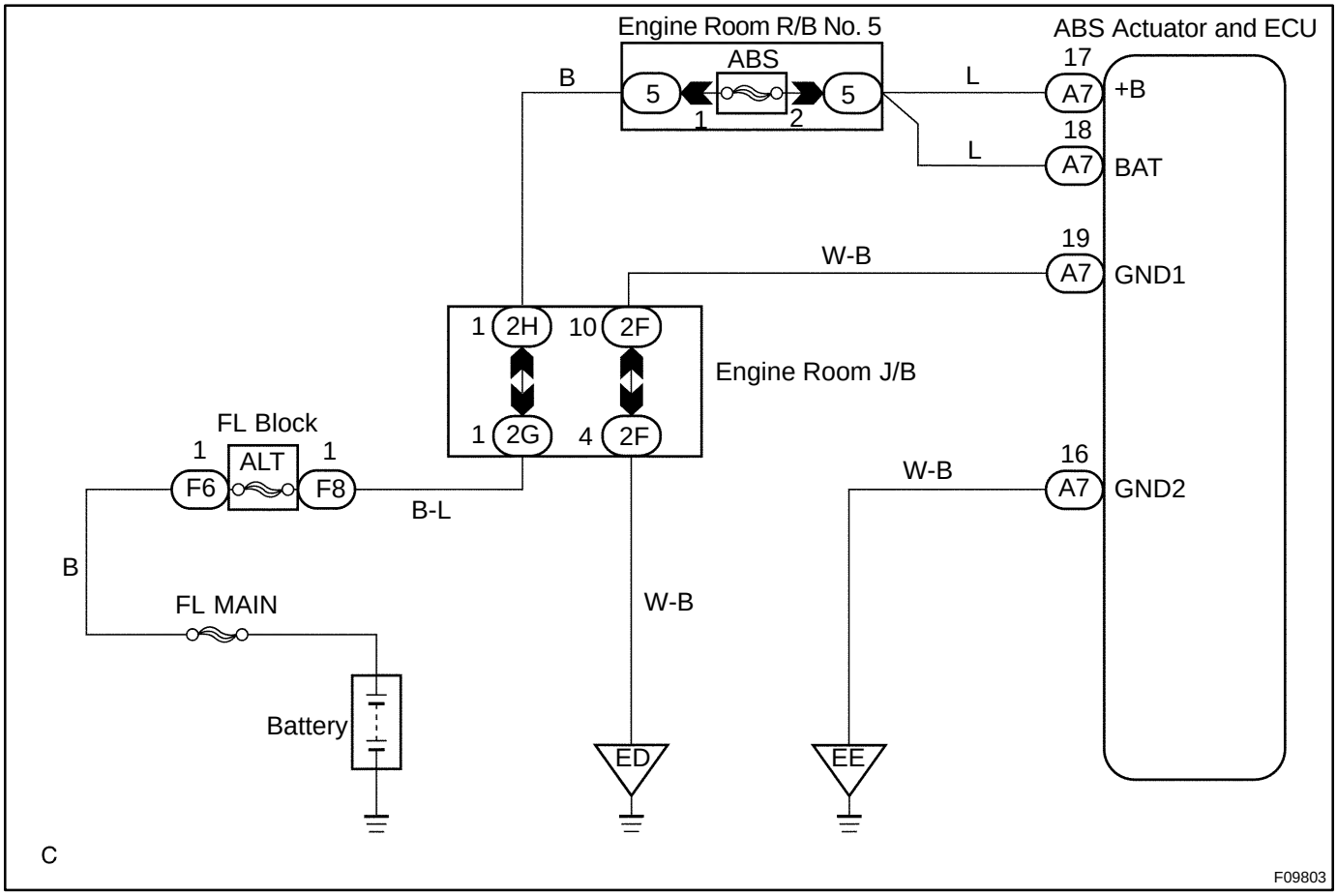

INSPECTION PROCEDURE

1	**Check the DTC once more.**

PREPARATION:

(a) Clear the DTC (See page DI-212).

(b) Turn the ignition switch OFF.

CHECK:

Turn the ignition switch ON, and check if the same DTC is stored in the memory.

NO → **No problem.**

YES

Replace ABS ECU.

DI6NF-02

DTC	31 - 36, 38, 39	Speed Sensor Circuit

CIRCUIT DESCRIPTION

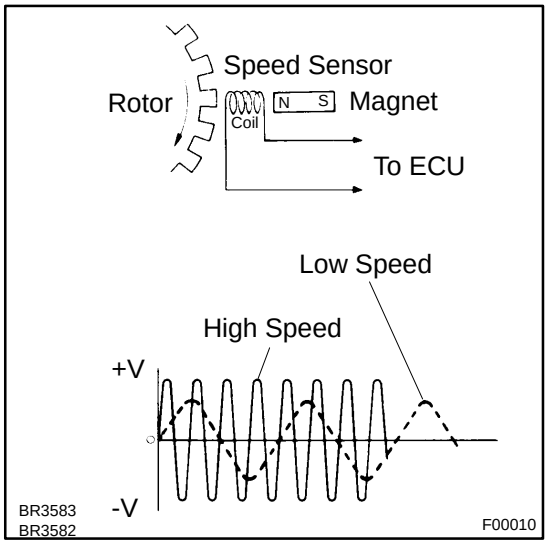

The speed sensor detects wheel speed and sends the appropriate signals to the ECU. These signals are used to control the ABS system. Each of the front and rear rotors has 48 serrations.

When the rotors rotate, a magnetic field emitted by a permanent magnet in the speed sensor generates an AC voltage. Since the frequency of this AC voltage changes in direct proportion to the speed of the rotor, the frequency is used by the ECU to detect the speed of each wheel.

DTC No.	DTC Detecting Condition	Trouble Area
31, 32, 33, 34	When any of the following 1. through 3. is detected: 1. Vehicle speed is more than 40 km/h (25 mph), and pulses are not input for 0.01 sec. 2. After the initial start or restart and when the vehicle speed has reached 12 km/h (7 mph), the wheel speed of 0 km/h (0 mph) is detected. 3. After the initial start or restart and when the vehicle speed has reached 18 km/h (11 mph), the front wheel speed of 0 km/h (0 mph) is detected.	●Right front, left front, right rear, left rear speed sensor ●Each speed sensor circuit ●Sensor installation
35, 36, 38, 39	Detecting abnormality in the resistance value of each speed sensor.	●Right front, left front, right rear, left rear speed sensor ●Each speed sensor circuit

HINT:

- DTC No. 31 and 35 are for the right front speed sensor.
- DTC No. 32 and 36 are for the left front speed sensor.
- DTC No. 33 and 38 are for the right rear speed sensor.
- DTC No. 34 and 39 are for the left rear speed sensor.

WIRING DIAGRAM

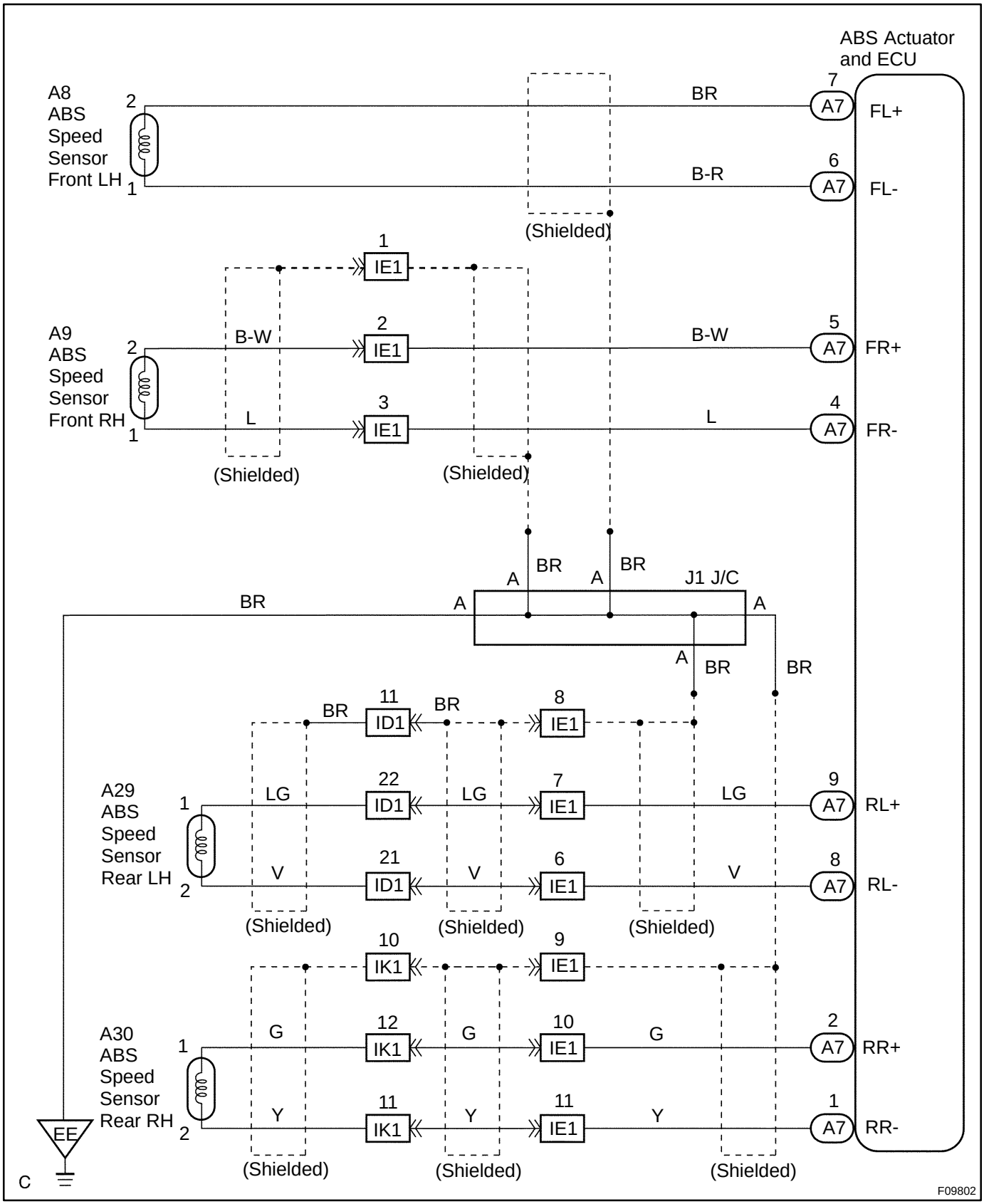

INSPECTION PROCEDURE

1	**Check speed sensor.**

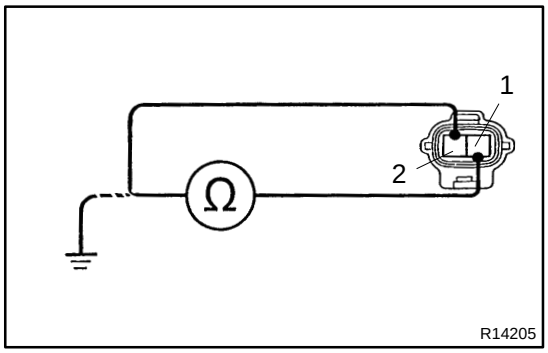

Front:

PREPARATION:

(a) Remove the front fender liner.

(b) Disconnect the speed sensor connector.

CHECK:

Measure the resistance between terminals 1 and 2 of the speed sensor connector.

OK:

Resistance: 0.6 - 2.5 kΩ (1.6 ± 0.2 kΩ at 20 ˚C)

CHECK:

Measure the resistance between terminals 1 and 2 of the speed sensor connector and body ground.

OK:

Resistance: 1 MΩ or higher

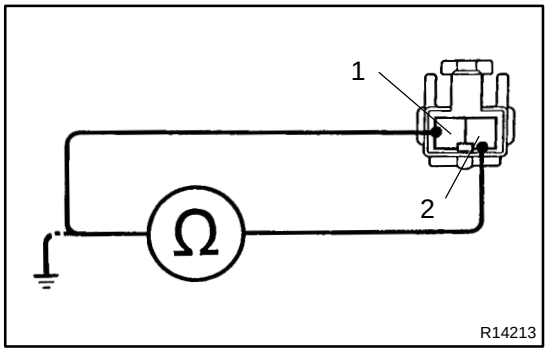

Rear:

PREPARATION:

(a) Remove the seat cushion and seatback.

(b) Disconnect the speed sensor connector.

CHECK:

Measure the resistance between terminals 1 and 2 of the speed sensor connector.

OK:

Resistance: 1.2 - 2.3 kΩ (1.6 ± 0.1 kΩ at 20 ˚C)

CHECK:

Measure the resistance between terminals 1 and 2 of the speed sensor connector and body ground.

OK:

Resistance: 1 MΩ or higher

NG → **Replace speed sensor.**

NOTICE:

Check the speed sensor signal last (See page DI-212).

OK

2	**Check for open and short circuit in harness and connector between each speed sensor and ABS ECU (See page IN-30).**

NG → **Repair or replace harness or connector.**

OK

3	**Check speed sensor installation.**

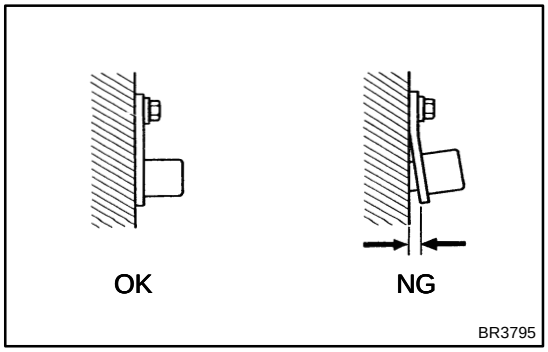

CHECK:
Check the speed sensor installation.
OK:

The installation bolt shall be tightened properly and there is no clearance is allowed between the sensor and front steering knuckle or rear axle carrier.

NG → **Replace speed sensor.**

NOTICE:
Check the speed sensor signal last (See page DI-212).

OK

4	**Check speed sensor and sensor rotor serrations.**

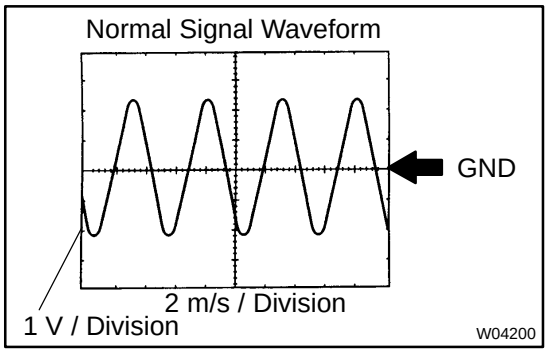

REFERENCE: INSPECTION USING OSCILLOSCOPE
PREPARATION:
(a) Disconnect the connector from the brake actuator.
(b) Connect the oscilloscope to the terminals FR+, FL+, RR+ or RL+ and GND of the ABS ECU harness side connector.
CHECK:
Drive the vehicle at about 30 km/h (19 mph), and check the signal waveform.

OK → **Check and replace ABS ECU.**

NG

5	Check sensor rotor and sensor tip.

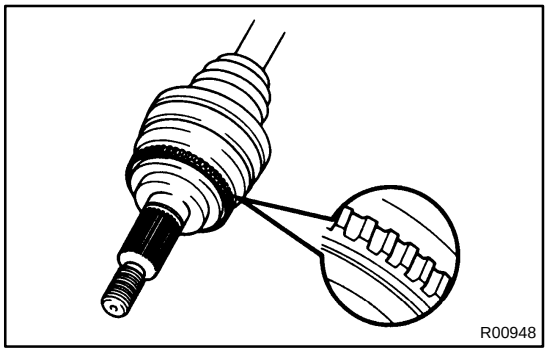

Front:

PREPARATION:

Remove the front drive shaft (See page SA-16).

CHECK:

Check the sensor rotor serrations.

OK:

No scratches, missing teeth or foreign objects.

PREPARATION:

Remove the front speed sensor (See page BR-60).

CHECK:

Check the sensor tip.

OK:

No scratches or foreign objects on the sensor tip.

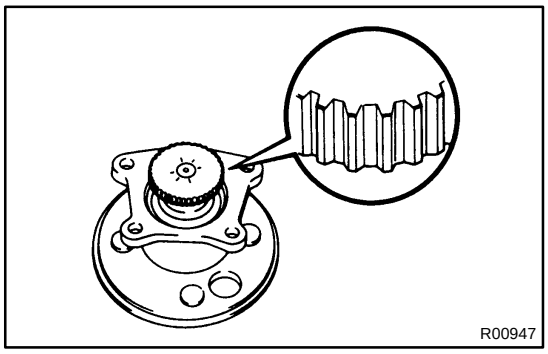

Rear:

PREPARATION:

Remove the axle hub (See page SA-45).

CHECK:

Check the sensor rotor serrations.

OK:

No scratches, missing teeth or foreign objects.

PREPARATION:

Remove the rear speed sensor (See page BR-63).

CHECK:

Check the sensor tip.

OK:

No scratches or foreign objects on the sensor tip.

NG	Replace sensor rotor or speed sensor.

NOTICE:

Check the speed sensor signal last (See page DI-212).

OK

Check and replace ABS ECU.

DI6NG-01

DTC	37	Speed Sensor Rotor Faulty

CIRCUIT DESCRIPTION

DTC No.	DTC Detecting Condition	Trouble Area
37	When any of the following 1. through 3. is detected: 1. Occurrence of wheel speed difference between the front and rear wheels of either left or right side of the vehicle and the front left and right wheels. (Detection of mini tire size, spinning wheel or decelerating wheel.) 2. Continuous ABS control for 60 sec. or more. 3. Interference on 1 or more wheels for 20 sec. with the brake pedal depressed, or for 5 sec. when the brake pedal is not depressed.	●Speed sensor ●Sensor rotor

INSPECTION PROCEDURE

1	**Check sensor rotor (See page DI-225).**

NG → **Replace sensor rotor.**

OK

2	**Check speed sensor (See page DI-225).**

NG → **Replace speed sensor.**

OK

3	**Check for open or short circuit in harness and connector between speed sensor and ABS ECU (See page IN-30).**

NG → **Repair or replace harness and connector.**

OK

Check and replace ABS ECU.

DI6NH-01

DTC	41	Power Source Circuit

CIRCUIT DESCRIPTION

This is the power source for the ECU, hence the actuators.

DTC No.	DTC Detecting Condition	Trouble Area
41	At a vehicle speed of about 6 km/h (4 mph), low battery voltage is less than 9.4 V during non-operation of ABS control or less than 8.8 V during operation of ABS control, and high battery voltage is more than 17.4 V.	●Battery ●Charging system ●Power source circuit

WIRING DIAGRAM

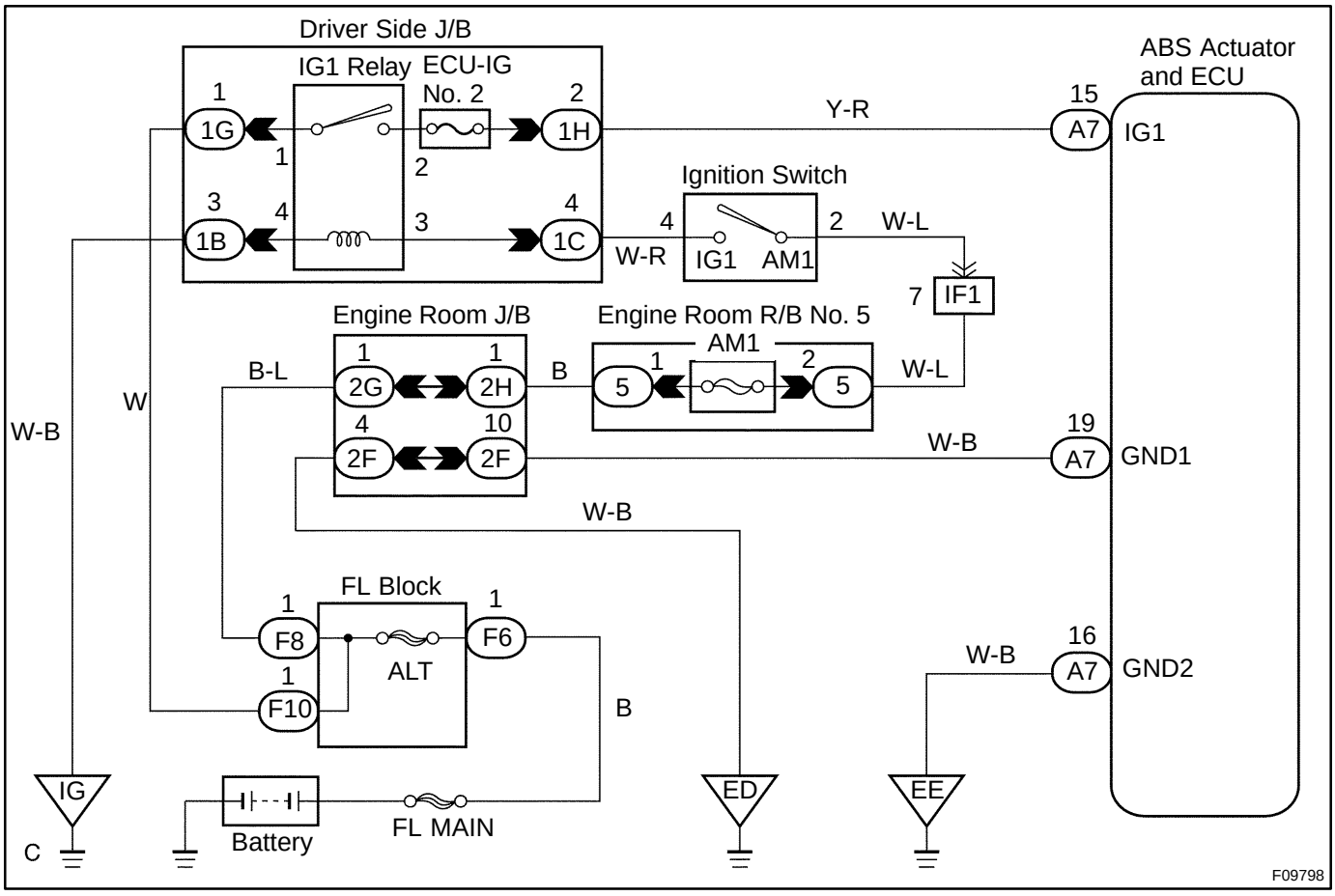

INSPECTION PROCEDURE

1	Check ECU-IG No. 2 fuse.

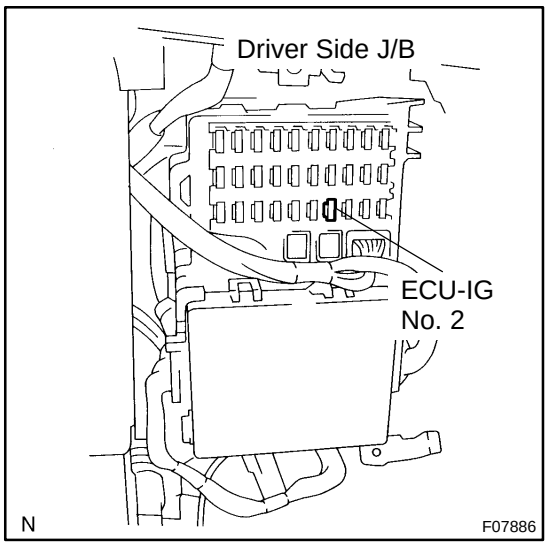

PREPARATION:

Remove ECU-IG No. 2 fuse from driver side J/B.

CHECK:

Check continuity of ECU-IG No. 2 fuse.

OK:

Continuity

NG → **Check for short circuit in all the harness and components connected to ECU-IG No. 2 fuse (See attached wiring diagram).**

OK

2	Check battery positive voltage.

OK:

Voltage: 10 - 14 V

NG → **Check and repair the charging system (See page CH-1).**

OK

3	**Check voltage between terminals IG1 (A7 - 15) and GND (A7 - 16, 19) of the brake actuator connector.**

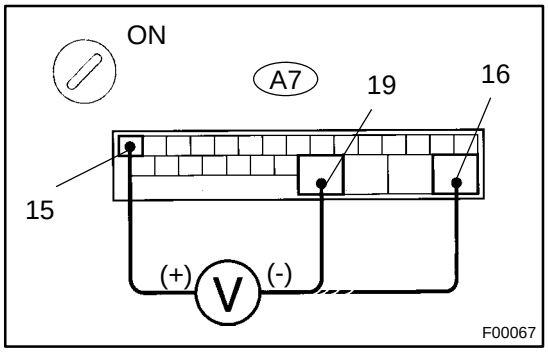

PREPARATION:

Disconnect the connector from the brake actuator.

CHECK:

(a) Turn the ignition switch ON.

(b) Measure the voltage between terminals A7 - 15 and A7 - 16, 19 of the brake actuator harness side connector.

OK:

Voltage: 10 - 14 V

OK	**Check and replace ABS ECU.**

NG

4	**Check continuity between terminals GND (A7 - 16, 19) of brake actuator connector and body ground.**

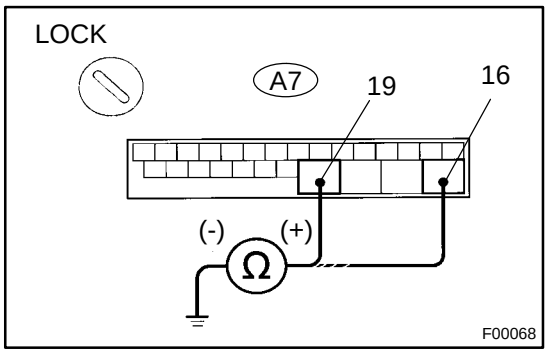

CHECK:

Measure the resistance between terminal A7 - 16, 19 of brake actuator harness side connector and body ground.

OK:

Resistance: 1 Ω or less

NG	**Repair or replace harness or connector.**

OK

Check for open circuit in harness and connector between terminal IG1 of brake actuator and ECU-IG fuse (See page IN-30).

DI6NI-02

DTC	58	Stop Light Switch Circuit

CIRCUIT DESCRIPTION

DTC No.	DTC Detecting Condition	Trouble Area
58	Stop light switch circuit is open, and stop light switch voltage is in the level between 55 % and 75 % of the battery voltage.	●Stop light switch ●Stop light switch circuit

WIRING DIAGRAM

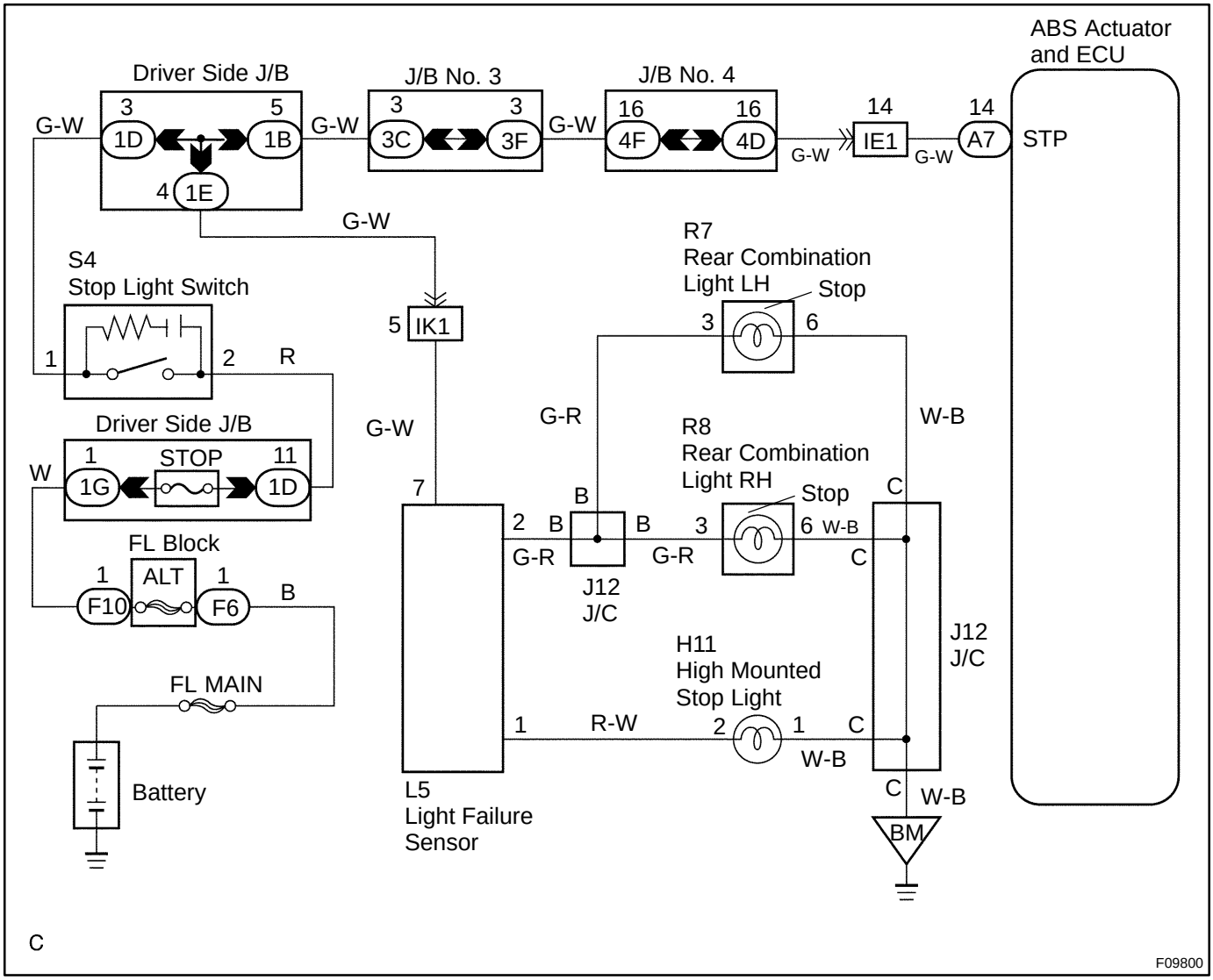

INSPECTION PROCEDURE

1	**Check operation of stop light.**

CHECK:

Check that the stop light lights up when the brake pedal is depressed and turns off when the brake pedal is released.

NG → **Repair stop light circuit (See page BE-36).**

OK ↓

2	**Check voltage between terminal STP (A7 - 14) of brake actuator and body ground.**

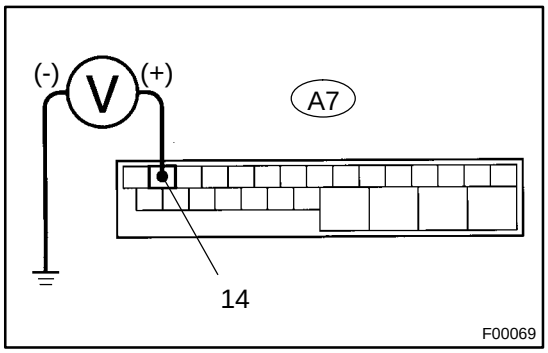

PREPARATION:

Disconnect the connector from the brake actuator.

CHECK:

Measure the voltage between terminal A7 - 14 of brake actuator harness side connector and body ground when the brake pedal is depressed.

OK:

Voltage: 8 - 14 V

OK → **Check and replace ABS ECU.**

NG ↓

3	**Check for open circuit in harness and connector between terminal STP of brake actuator and stop light switch (See page IN-30).**

NG → **Repair or replace harness or connector.**

OK ↓

Proceed to next circuit inspection shown in problem symptoms table (See page DI-218).

DI6NJ-01

DTC	62	ABS ECU Malfunction

CIRCUIT DESCRIPTION

DTC No.	DTC Detecting Condition	Trouble Area
62	ABS ECU continuously detects the proper operation of ABS.	ABS ECU

INSPECTION PROCEDURE

1	**Is DTC output?**

Check the DTC on page DI-212 .

YES → **Repair circuit indicated by the code output.**

NO

2	**Is normal code displayed?**

YES → **Check for short circuit in harness and connector between DLC1 or DLC2 and ABS ECU (See page IN-30).**

NO

3	**Is ABS warning light off?**

YES → **Check open and short circuit of the harness and connector in the Tc circuit between ABS ECU and DLC2 or DLC1.**

NO

4	**Check voltage between terminals IG1 (A7 - 15) and GND (A7 - 16, 19) of brake actuator connector.**

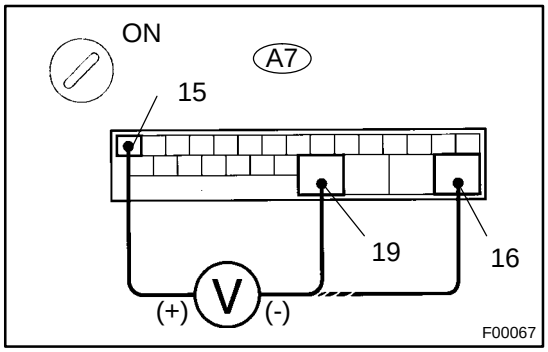

PREPARATION:

Disconnect the connector from the brake actuator.

CHECK:

(a) Turn the ignition switch ON.

(b) Measure the voltage between terminals A7 - 15 and A7 - 16, 19 of brake actuator harness side connector.

OK:

Voltage: 10 - 14 V

NG → **Check for open or short circuit in harness and connector between ECU-IG fuse and IG1 of brake actuator (See page IN-30).**

OK

5	**Check connection of brake actuator connector.**

CHECK:

Check the connection of the brake actuator connector and check the ABS warning light goes off.

OK → **Repair or replace harness or connector.**

NG

Check and replace ABS ECU.

DI6NN-01

Tc Terminal Circuit

CIRCUIT DESCRIPTION

Connecting between terminals Tc and E_1 of the DLC1 causes the ECU to display the DTC by flashing the ABS warning light.

WIRING DIAGRAM

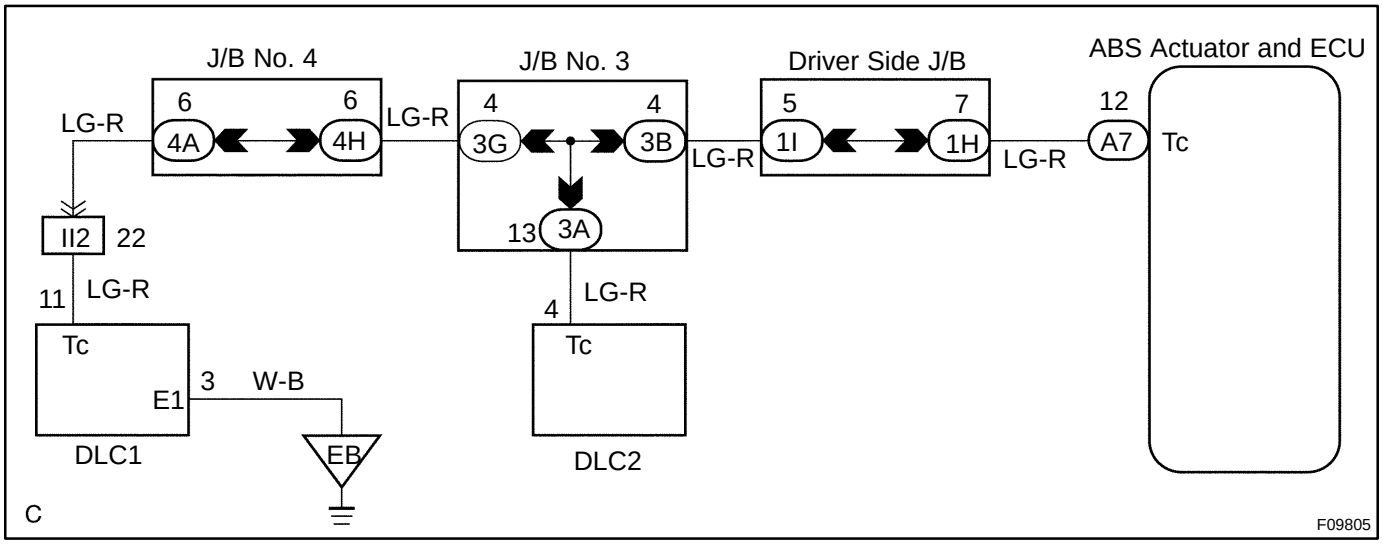

INSPECTION PROCEDURE

1	**Check voltage between terminals Tc and E_1.**

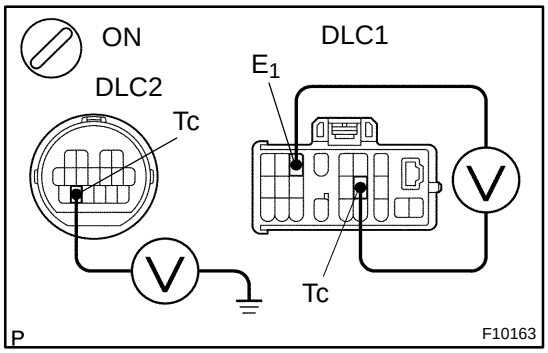

CHECK:

(a) Turn the ignition switch ON.

(b) Measure the voltage between terminals Tc and E_1 of DLC1 or terminal Tc of DLC2 and body ground.

OK:

Voltage: 10 - 14 V

OK → **If ABS warning light does not blink even after Tc and E_1 are connected, the ECU may be defective.**

NG

2	**Check for open and short circuit in harness and connector between ABS ECU and DLC2 or DLC1, DLC2 or DLC1 and body ground (See page IN-30).**

NG → **Repair or replace harness or connector.**

OK

Check and replace ABS ECU.

DI6NO-01

Ts Terminal Circuit

CIRCUIT DESCRIPTION

The sensor check circuit detects abnormalily in the speed sensor signal which cannot be detected by the DTC check.
Connecting terminals Ts and E_1 of the DLC1 starts the check.

WIRING DIAGRAM

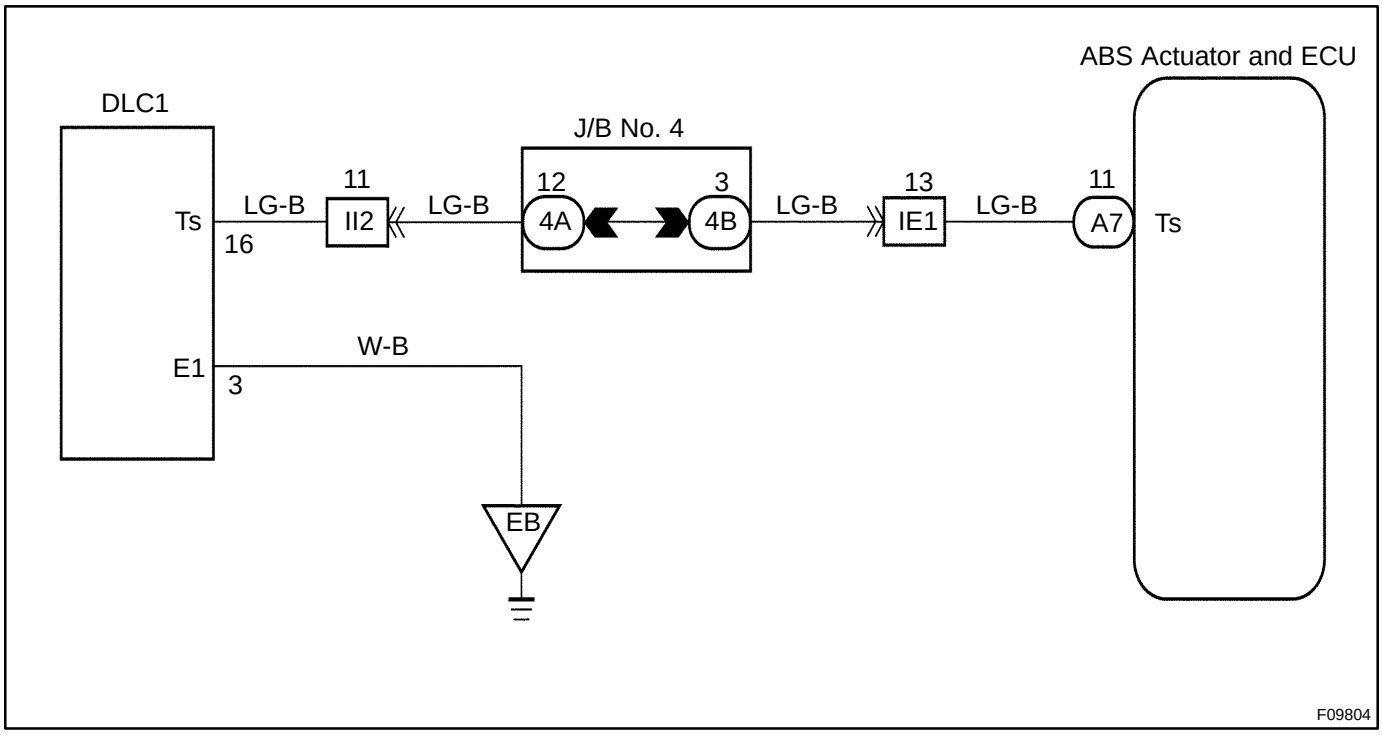

INSPECTION PROCEDURE

1	**Check voltage between terminals Ts and E_1 of DLC1.**

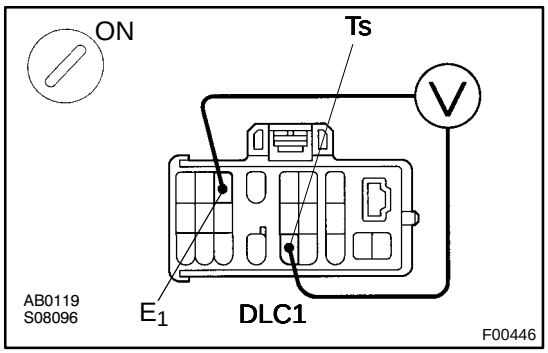

CHECK:

(a) Turn the ignition switch ON.

(b) Measure the voltage between terminals Ts and E_1 of DLC1.

OK:

Voltage: 10 - 14 V

OK → **If ABS warning light does not blink even after Ts and E_1 are connected, the ECU may be defective.**

NG

2	**Check for open and short circuit in harness and connector between ABS ECU and DLC1, DLC1 and body ground (See page IN-30).**

NG → **Repair or replace harness or connector.**

OK

Check and replace ABS ECU.

DI6N6-01

CUSTOMER PROBLEM ANALYSIS CHECK

ABS Check Sheet

Inspector's Name :

Customer's Name		**Registration No.**	
		Registration Date	/ /
		Frame No.	
Date Vehicle Brought In	/ /	**Odometer Reading**	km miles

Date Problem First Occurred	/ /
Frequency Problem Occurs	☐ Continuous ☐ Intermittent (times a day)

Symptoms	☐ ABS does not operate.	
	☐ ABS does not operate intermittently.	
	ABS Warning Light Abnormal	☐ Remains ON ☐ Does not Light Up
	BRAKE Warning Light Abnormal	☐ Remains ON ☐ Does not Light Up

DTC Check	**1st Time**	☐ Normal Code ☐ Malfunction Code (Code)
	2nd Time	☐ Normal Code ☐ Malfunction Code (Code)

DI6N8-01

DIAGNOSTIC TROUBLE CODE CHART

HINT:

- Using SST 09843-18020, connect the terminals Tc and E_1.
- If any abnormality is found when inspecting parts, inspect the ECU.
- If a malfunction code is displayed during the DTC check, check the circuit listed under the code. For details of each code, refer to the page under respective "DTC No." in the DTC chart.

DTC No. (See Page)	Detection Item	Trouble Area
11 (DI-219)	Open or short circuit in ABS solenoid relay circuit	●ABS solenoid relay ●ABS solenoid relay circuit
13 (DI-221)	Open or short circuit in ABS pump motor circuit	●ABS motor relay ●ABS motor relay circuit
21 (DI-223)	Open or short circuit in brake actuator	●Brake actuator ●SFRR or SFRH circuit
22 (DI-223)	Open or short circuit in brake actuator	●Brake actuator ●SFLR or SFLH circuit
23 (DI-223)	Open or short circuit in brake actuator	●Brake actuator ●SRRR or SRRH circuit
24 (DI-223)	Open or short circuit in brake actuator	●Brake actuator ●SRLR or SRLH circuit
31* (DI-225)	Right front wheel speed sensor signal malfunction	●Right front, left front, right rear and left rear speed sensor ●Each speed sensor circuit ●Sensor installation
32* (DI-225)	Left front wheel speed sensor signal malfunction	
33* (DI-225)	Right rear wheel speed sensor signal malfunction	
34* (DI-225)	Left rear wheel speed sensor signal malfunction	
35* (DI-225)	Open circuit in right front wheel speed sensor circuit	●Right front, left front speed sensor ●Each speed sensor circuit
36* (DI-225)	Open circuit in left front wheel speed sensor circuit	
37 (DI-230)	Speed sensor rotor has wrong number of teeth on one of the 4 wheels	●Speed sensor ●Sensor rotor
38* (DI-225)	Open circuit in right rear wheel speed sensor circuit	●Right rear, left rear speed sensor ●Each speed sensor circuit
39* (DI-225)	Open circuit in left rear wheel speed sensor circuit	
41 (DI-231)	Low and high battery positive voltage	●Battery ●Charging system ●Power source circuit
58 (DI-234)	Open circuit in stop light switch circuit	●Stop light switch ●Stop light switch circuit
62 (DI-236)	Malfunction in ABS ECU	ABS ECU
Always ON (DI-238)	Malfunction in ABS ECU	●Charging system ●ABS warning light circuit

*: As the DTC cannot only be erased by replacing parts, do either of the following operations.

(1) Clear DTC (See page DI-212).

(2) At a vehicle speed of 20 km/h (12 mph), drive the vehicle for 30 sec. or more.

ANTI-LOCK BRAKE SYSTEM WITH ELECTRONIC BRAKE FORCE DISTRIBUTION (EBD)

DI6N5-01

HOW TO PROCEED WITH TROUBLESHOOTING

Troubleshoot in accordance with the procedure on the following pages.

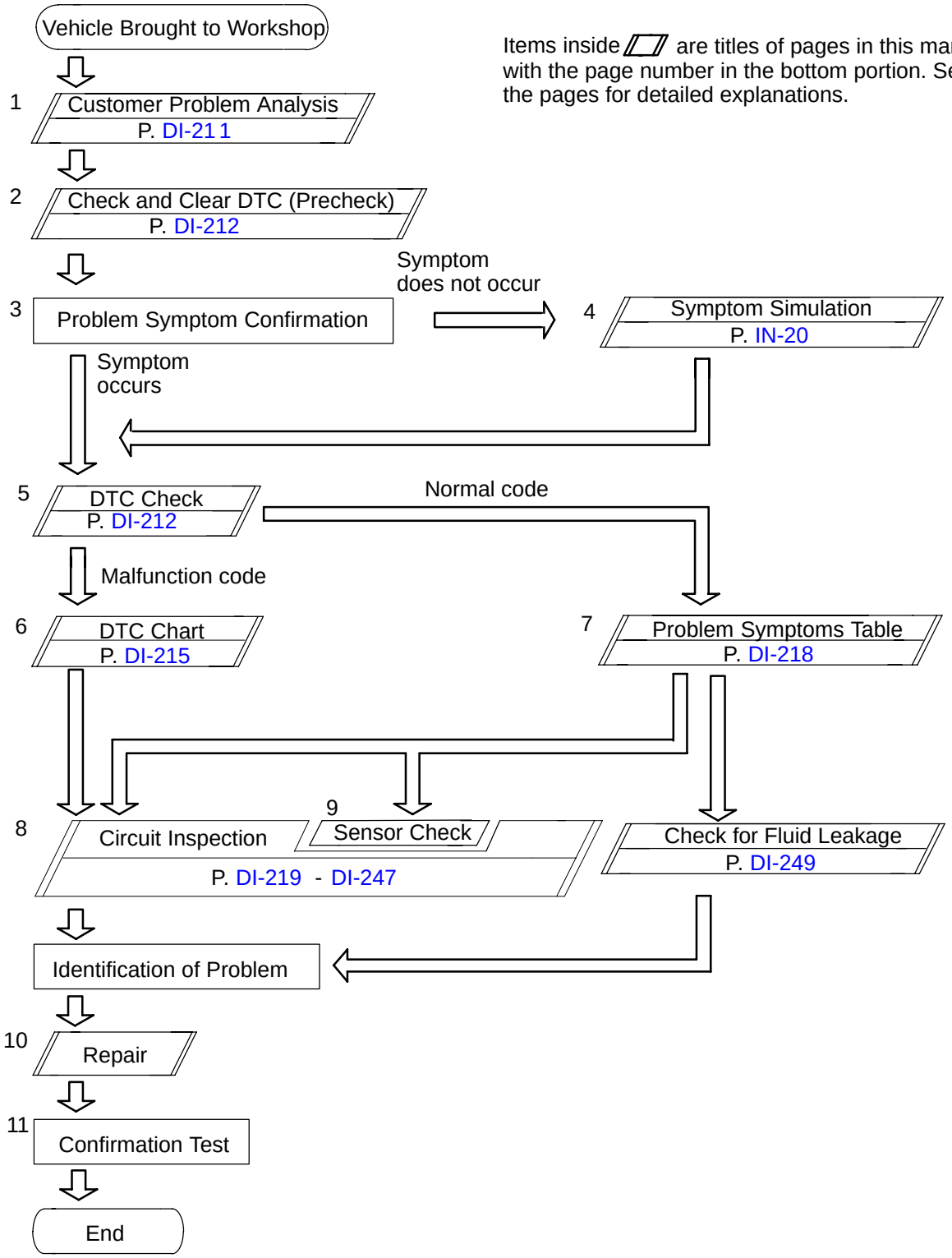

Items inside ▱ are titles of pages in this manual, with the page number in the bottom portion. See the pages for detailed explanations.

Fail safe function:
When a failure occurs in the ABS system, the ABS warning light is lit and the ABS operation is prohibited. In addition to this, when the failure which disables the EBD operation occurs, the brake warning light is lit as well and EBD operation is prohibited.

DI6N9-01

PARTS LOCATION

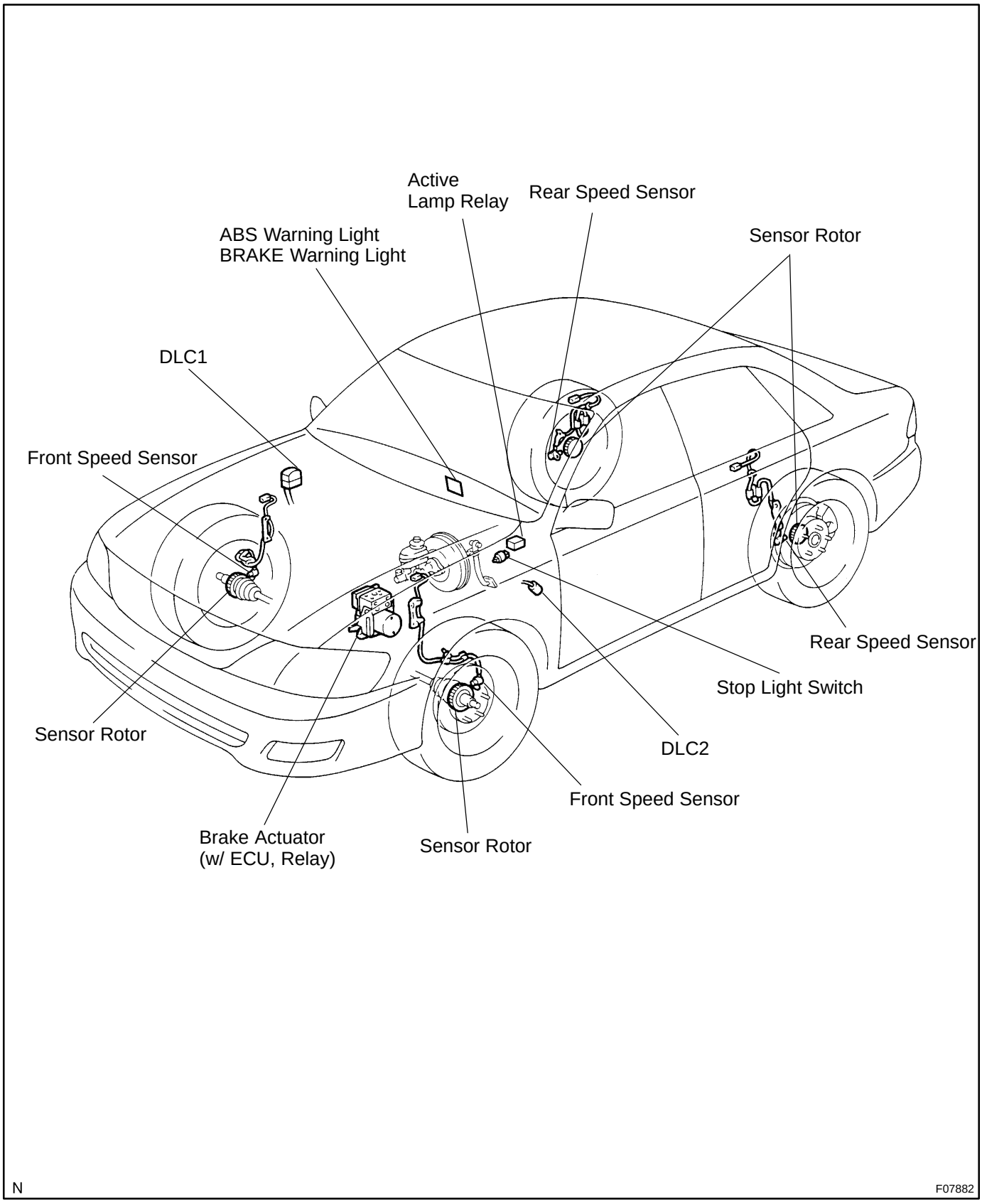

DI6N7-01

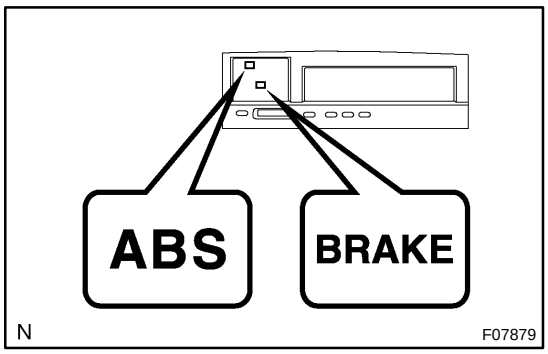

PRE-CHECK

1. DIAGNOSIS SYSTEM

(a) Release the parking brake pedal.

(b) Check the indicator.

When the ignition switch is turned ON, check that the ABS warning light and BRAKE warning light goes on for approx. 3 seconds.

HINT:

- When the parking brake is applied or the level of the brake fluid is low, the BRAKE warning light is lit.
- If the indicator check result is not normal, proceed to troubleshooting for the ABS warning light circuit or BRAKE warning light circuit (See page DI-243 , DI-240).

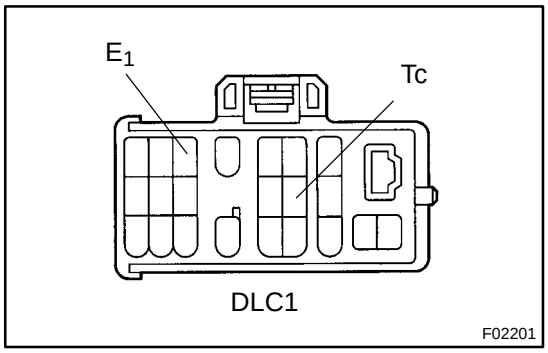

(c) Check the DTC.

(1) Using SST, connect terminals Tc and E_1 of DLC1.

SST 09843-18020

(2) Turn the ignition switch ON and read the DTC from the ABS warning light on the combination meter.

HINT:

- If no codes appears, inspect the diagnostic circuit or ABS warning light circuit (See page DI-245 or DI-243).

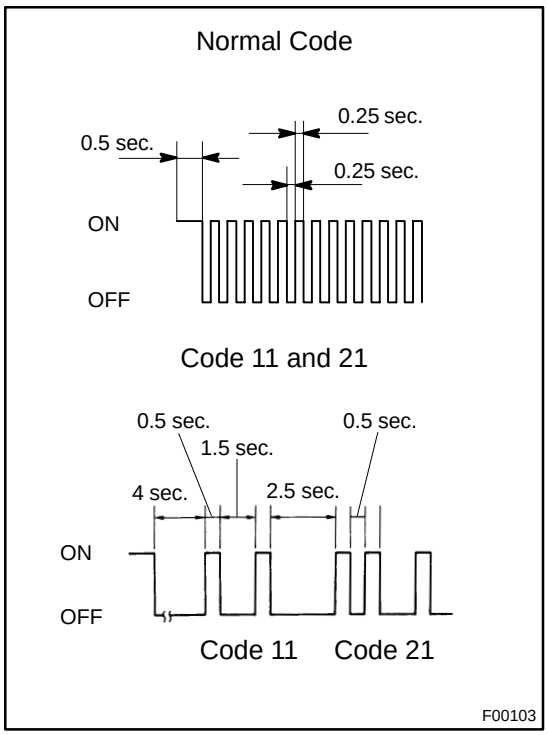

- As an example, the blinking patterns for normal code and codes 11 and 21 are shown on the left.

(3) Codes are explained in the code table on page DI-215 .

(4) After completing the check, disconnect terminals Tc and E_1, and turn off the display.

If 2 or more malfunction codes are identified at the same time, the lowest numbered DTC will be displayed 1st.

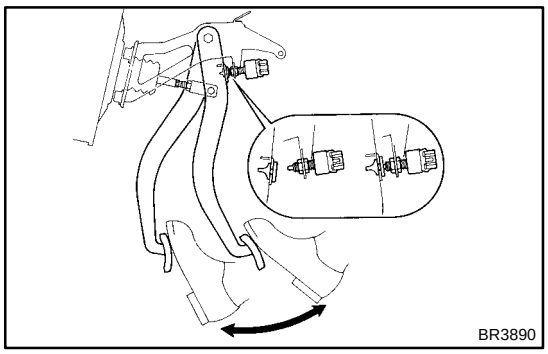

(d) Clear the DTC.
(1) Using SST, connect terminals Tc and E_1 of DLC1.
SST 09843-18020
(2) Turn the ignition switch ON.
(3) Clear the DTC stored in ECU by depressing the brake pedal 8 times or more within 5 seconds.
(4) Check that the warning light shows the normal code.
(5) Remove the SST from the terminals of DLC1.
SST 09843-18020

HINT:
Cancellation cannot be done by removing the battery cable or ECU-IG fuse.

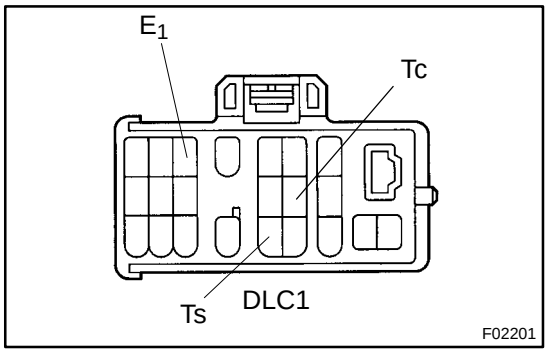

2. SPEED SENSOR SIGNAL CHECK (TEST MODE)

(a) Check the sensor signal.
(1) Using SST, connect terminals Ts and E_1 of DLC1.
SST 09843-18020
(2) Start the engine.

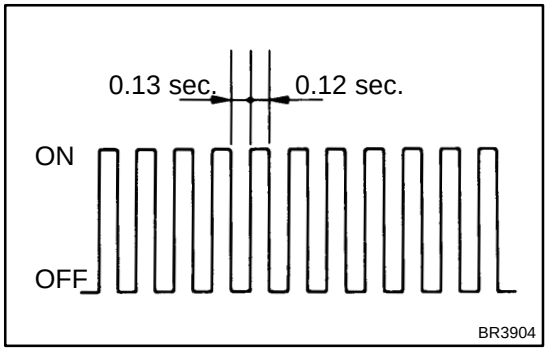

(3) Check that the ABS warning light blinks.

HINT:
If the ABS warning light does not blink, inspect the ABS warning light circuit (See page DI-243).

(4) Drive vehicle straight forward.
(5) Drive vehicle at a speed faster than 45 km/h (28 mph) for several seconds.

HINT:
If the brake is applied during the check, the check routine must be started again.

(6) Stop the vehicle.
(7) Using SST, connect terminals Tc and E_1 of DLC1.
SST 09843-18020
(8) Read the number of blinks of the ABS warning light.

HINT:
- See the list of DTC shown on the next page.
- If every sensor is normal, a normal code is output (A cycle of 0.25 sec. ON and 0.25 sec. OFF is repeated).
- If 2 or more malfunction codes are identified at the same time, the lowest numbered code will be displayed 1st.

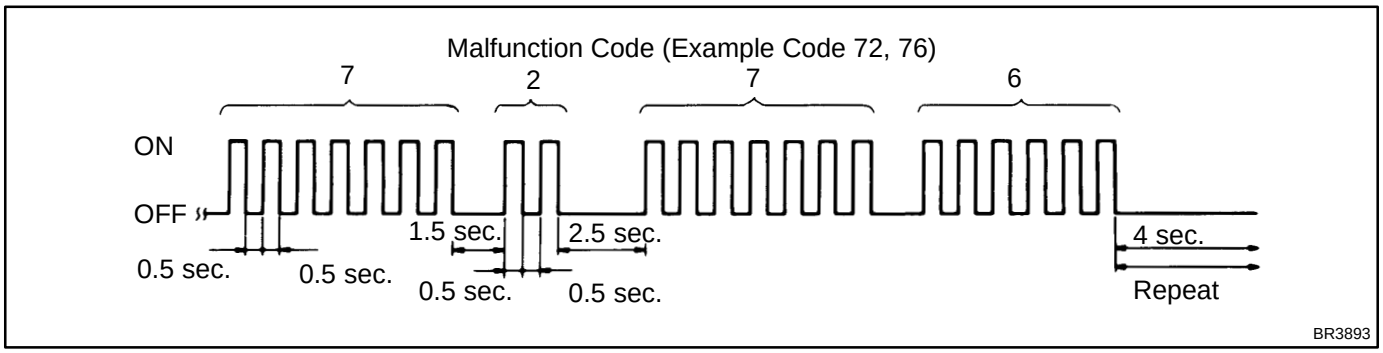

(9) After completing the check, disconnect the SST from terminals Tc and E_1 of DLC1, and turn the ignition switch OFF.

SST 09843-18020

DTC of speed sensor check function:

Code No.	Diagnosis	Trouble Area
71	Low output voltage of right front speed sensor	●Right front speed sensor ●Sensor installation ●Right front speed sensor rotor
72	Low output voltage of left front speed sensor	●Left front speed sensor ●Sensor installation ●Left front speed sensor rotor
73	Low output voltage of right rear speed sensor	●Right rear speed sensor ●Sensor installation ●Right rear speed sensor rotor
74	Low output voltage of left rear speed sensor	●Left rear speed sensor ●Sensor installation ●Left rear speed sensor rotor
75	Abnormal change in output voltage of right front speed sensor	●Right front speed sensor rotor
76	Abnormal change in output voltage of left front speed sensor	●Left front speed sensor rotor
77	Abnormal change in output voltage of right rear speed sensor	●Right rear speed sensor rotor
78	Abnormal change in output voltage of left rear speed sensor	●Left rear speed sensor rotor

DI6NB-01

PROBLEM SYMPTOMS TABLE

If a normal code is displayed during DTC check but a problem still occurs, check the circuits corresponding to each problem symptom in the order given in the table below and proceed to the relevant troubleshooting page.

NOTICE:

When replacing ABS ECU, sensor or etc., turn the IG switch OFF.

Symptom	Suspect Area	See page
ABS does not operate	Only when 1. - 4. are all normal and the problem is still occurring, replace the ABS ECU. 5. Check the DTC reconfirming that the normal code is output. 6. Power source circuit 7. Speed sensor circuit 8. Check the hydraulic circuit for leakage.	 DI-212 DI-231 DI-225 DI-249
ABS does not operate intermittently	Only when 1. - 4. are all normal and the problem is still occurring, replace the ABS ECU. 1. Check the DTC reconfirming that the normal code is output. 2. Speed sensor circuit 3. Stop light switch circuit 4. Check the hydraulic circuit for leakage.	 DI-212 DI-225 DI-234 DI-249
ABS warning light abnormal	1. ABS warning light circuit 2. ABS ECU	DI-243
BRAKE warning light abnormal	1. BRAKE warning light circuit 2. ABS ECU	DI-240
DTC check cannot be done	Only when 1. and 2. are all normal and the problem is still occurring, replace the ABS ECU. 1. ABS warning light circuit 2. Tc terminal circuit	 DI-243 DI-245
Speed sensor signal check cannot be done	1. Ts terminal circuit 2. ABS ECU	DI-247

DI6NA-01

TERMINALS OF ECU

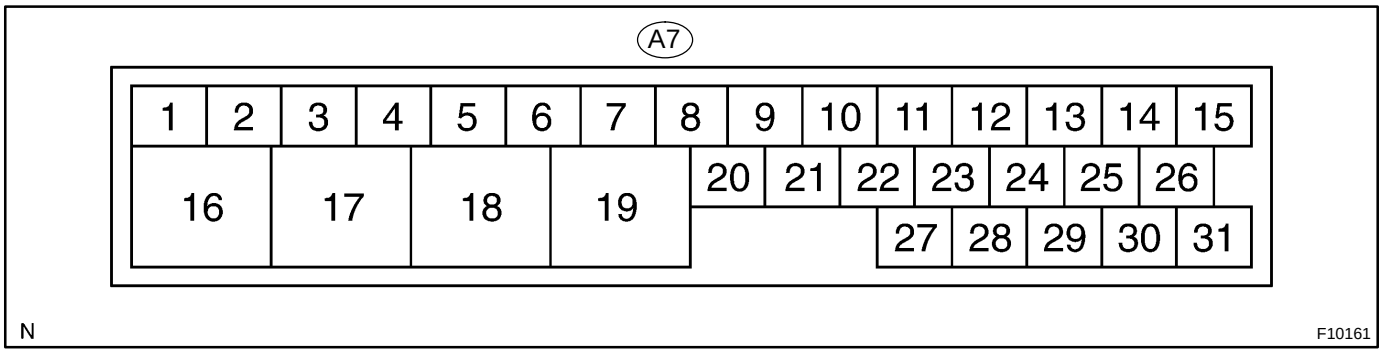

Symbols (Terminals No.)	Wiring Color	Condition	STD Voltage (V)
RR+ (A7 - 2) - RR- (A7 - 1)	G ↔ Y	IG switch ON Slowly turn right rear wheel	AC generation
FR+ (A7 - 5) - FR- (A7 - 4)	B-W ↔ L	IG switch ON Slowly turn right front wheel	AC generation
FL+ (A7 - 7) - FL- (A7 - 6)	BR ↔ B-R	IG switch ON Slowly turn left front wheel	AC generation
RL+ (A7 - 9) - RL- (A7 - 8)	LG ↔ V	IG switch ON Slowly turn left rear wheel	AC generation
Ts (A7 - 11) - GND (A7 - 16, 19)	LG-B ↔ W-B	IG switch ON	5.7 - 8.1
Tc (A7 - 12) - GND (A7 - 16, 19)	LG-R ↔ W-B	IG switch ON	5.7 - 8.1
STP (A7 - 14) - GND (A7 - 16, 19)	G-W ↔ W-B	Stop light switch pushed in	Below 1.5
		Stop light switch released	5 - 14
IG1(A7 - 15) - GND (A7 - 16, 19)	Y-R ↔ W-B	IG switch ON	10 - 14
+B (A7 - 17) - GND (A7 - 16, 19)	L ↔ W-B	Always	10 - 14
BAT (A7 - 18) - GND (A7 - 16, 19)	L ↔ W-B	Always	10 - 14
WA (A7 - 20) - GND (A7 - 16, 19)	B ↔ W-B	IG switch ON, ABS warning light ON	Below 2.6
		IG switch ON, ABS warning light OFF	10 - 14
EBDW (A7 - 21) - GND (A7 - 16, 19)	R-Y ↔ W-B	IG switch ON, BRAKE warning light ON	Below 2.6
		IG switch ON, BRAKE warning light OFF	10 - 14
PN (A7 - 23) - GND (A7 - 16, 19)	L-W ↔ W-B	IG switch ON, Shift lever is Por N range	10 - 14
		IG switch ON, Shift lever is not Por N range	Below 2.0

DI6OI-03

ABS Warning Light Circuit

WIRING DIAGRAM

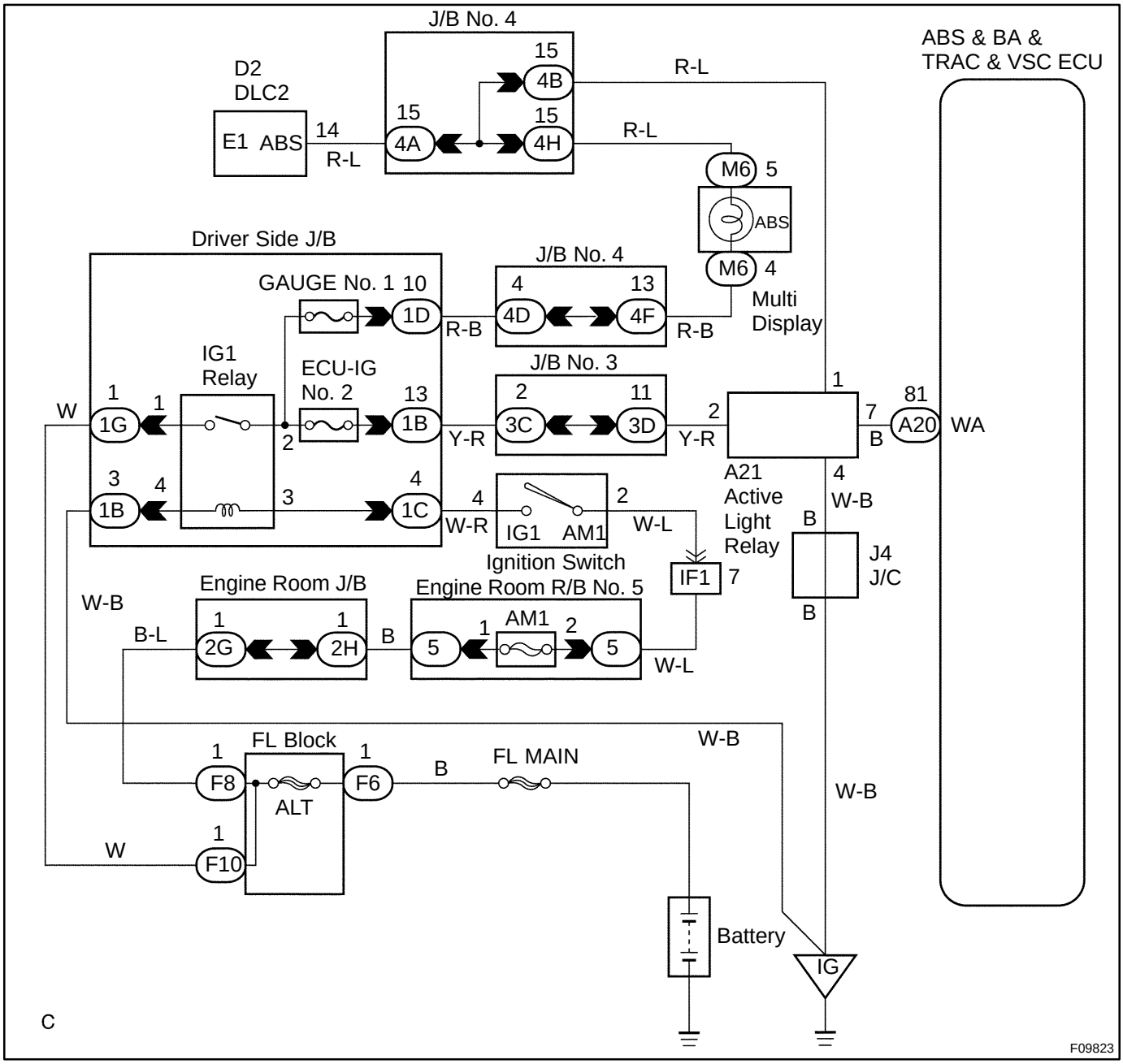

INSPECTION PROCEDURE

HINT:

Troubleshoot in accordance with the chart below for each trouble symptom.

ABS warning light does not light up	*
ABS warning light remains on	Go to step 2

*: Start the inspection from step 1 in case of using a TOYOTA hand-held tester and start from step 2 in case of not using the TOYOTA hand-held tester.

1	**Check operation of the ABS warning light.**

PREPARATION:

(a) Connect the TOYOTA hand-held tester to the DLC3.
(b) Turn the ignition switch ON and push the TOYOTA hand-held tester main switch ON.
(c) Select the ACTIVE TEST mode on the TOYOTA hand-held tester.

CHECK:

Check that ”ON” and ”OFF” of the ABS warning light can be shown on the combination meter on the TOYOTA hand-held tester.

OK → **Check and replace ABS & BA & TRAC & VSC ECU.**

NG

2	**Check ABS warning light.**

See combination meter troubleshooting on page BE-2 .

NG → **Replace bulb or repair combination meter assembly.**

OK

3	**Check active lamp relay.**

NG → **Replace active lamp relay.**

OK

Repair or replace and check for open or short circuit in harness and connector.

DI6OH-03

DTC	Always ON	Malfunction in ECU VSC Warning Light Circuit

CIRCUIT DESCRIPTION

DTC No.	DTC Detecting Condition	Trouble Area
Always ON	Either of the following 1. or 2. is detected: 1. There is a malfunction in the ECU internal circuit. 2. There is a malfunction in VSC warning light circuit.	●Charging system ●VSC warning light circuit

HINT:
TOYOTA hand-held tester may not be able to be used when ECU is defective.

WIRING DIAGRAM

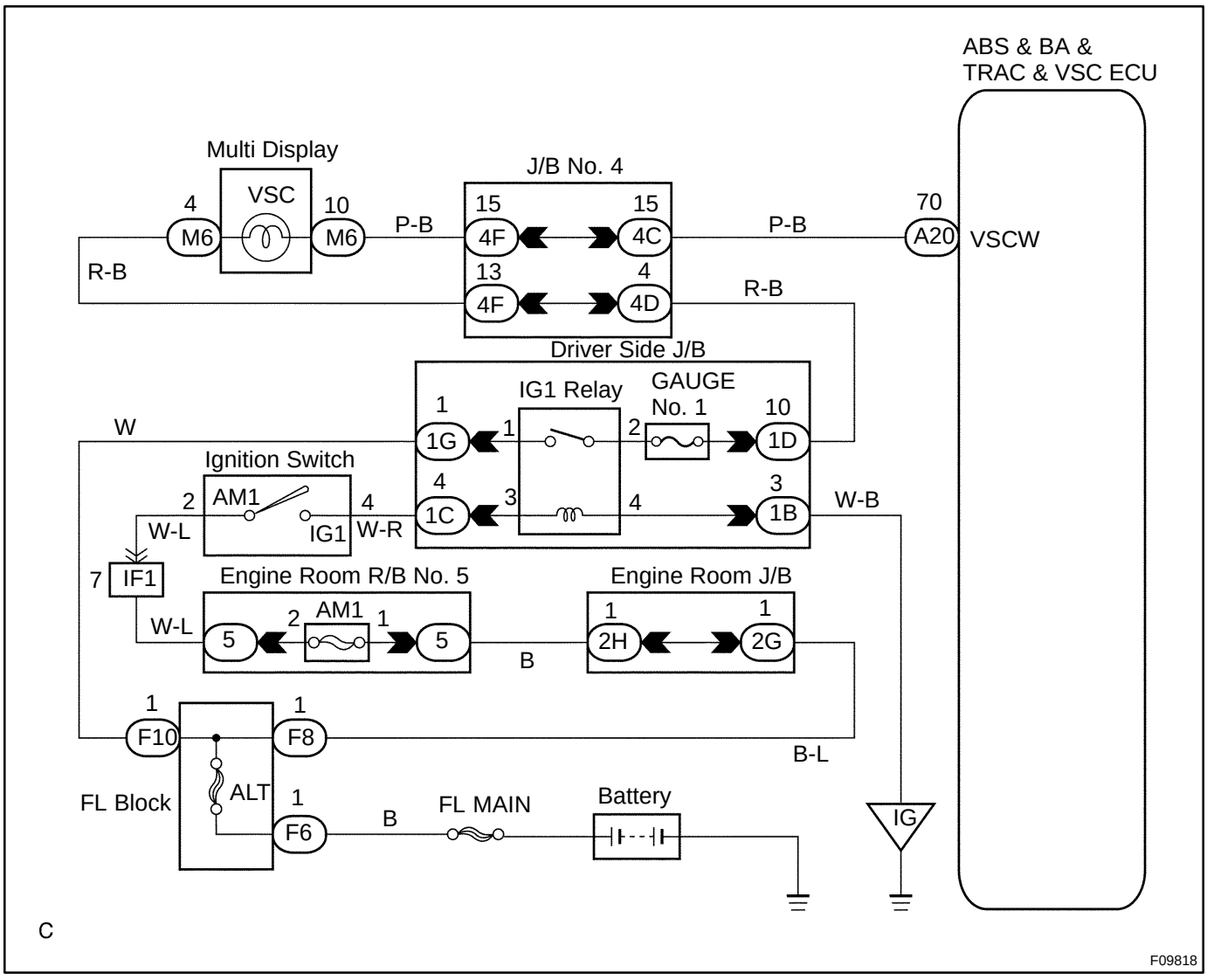

INSPECTION PROCEDURE

1	**Check that the ECU connectors are securely connected to the ECU.**

NO → **Connect the connector to the ECU.**

YES

2	**Is DTC output?**

Check DTC on page DI-252 .

YES → **Repair circuit indicated by the output code .**

NO

3	**Does VSC warning light go off?**

YES → **Check for open or short circuit in harness and connector between ECU-IG fuse and ECU (See page IN-30).**

NO

4	**Check battery positive voltage.**

PREPARATION:
Start the engine.
CHECK:
Check the battery positive voltage.
OK:
Voltage: 10 - 16 V

NG → **Check and repair the charging system (See page CH-1).**

OK

5	**Check operation of the VSC warning light.**

In case of using the TOYOTA hand-held tester:

PREPARATION:

(a) Connect the TOYOTA hand-held tester to the DLC3.
(b) Turn the ignition switch ON and push the TOYOTA hand-held tester main switch ON.
(c) Select the ACTIVE TEST mode on the TOYOTA hand-held tester.

CHECK:

Check that "ON" and "OFF" of the VSC warning light can be shown on the combination meter by the TOYOTA hand-held tester.

In case of not using the TOYOTA hand-held tester:

PREPARATION:

(a) Turn the ignition switch OFF.
(b) Disconnect the connector from the ABS & BA & TRAC & VSC ECU.
(c) Turn the ignition switch ON.

CHECK:

Check the VSC warning light goes off.

NG → **Check and replace combination meter (See page BE-2).**

OK

6	**Check for short circuit in harness and connector between combination meter and ABS & BA & TRAC & VSC ECU, combination meter and DLC1 (See page IN-30).**

NG → **Repair or replace harness or connector.**

OK

Check and replace ABS & BA & TRAC & VSC ECU.

DI6OG-02

DTC	Always ON	Malfunction in ECU ABS Warning Light Circuit

CIRCUIT DESCRIPTION

DTC No.	DTC Detecting Condition	Trouble Area
Always ON	Either of the following 1., 2. or 3. is detected: 1. The ECU connectors are OFF the ECU. 2. There is a malfunction in the ECU internal circuit. 3. There is a malfunction in ABS warning light circuit.	●Charging system ●ABS warning light circuit

HINT:
TOYOTA hand-held tester may not be able to be used when the ECU is defective.

WIRING DIAGRAM

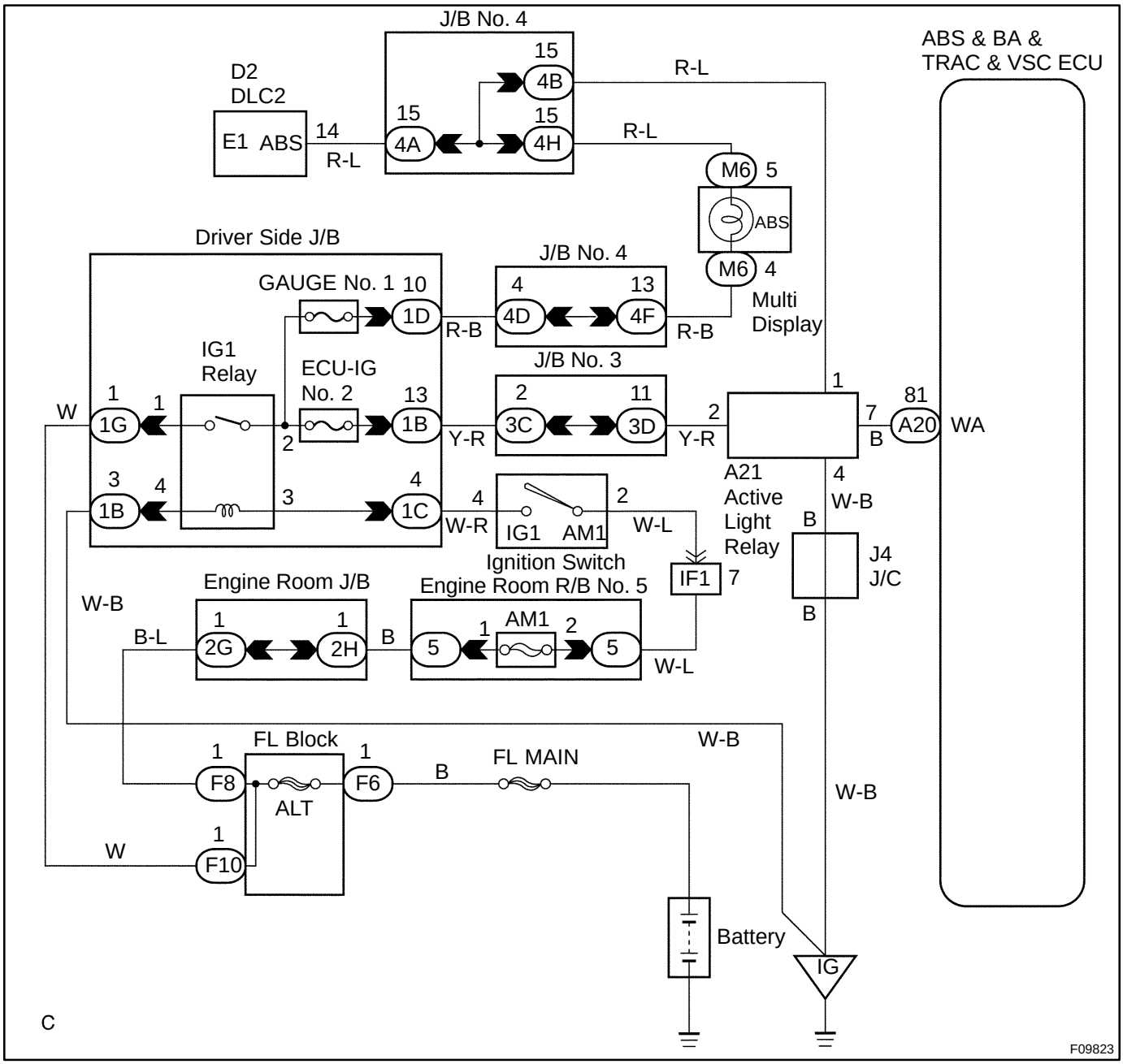

2001 AVALON (RM808U)

INSPECTION PROCEDURE

1	**Check that the ECU connectors are securely connected to the ECU.**

NO → **Connect the connector to the ECU.**

YES

2	**Is DTC output?**

Check DTC on page DI-252 .

YES → **Repair circuit indicated by the output code .**

NO

3	**Does ABS warning light go off?**

YES → **Check for open or short circuit in harness and connector between ECU-IG fuse and ECU (See page IN-30).**

NO

4	**Check battery positive voltage.**

PREPARATION:
Start the engine.
CHECK:
Check the battery positive voltage.
OK:
Voltage: 10 - 16 V

NG → **Check and repair the charging system (See page CH-1).**

OK

5	**Check operation of the ABS warning light.**

In case of using the TOYOTA hand-held tester:

PREPARATION:

(a) Connect the TOYOTA hand-held tester to the DLC3.
(b) Turn the ignition switch ON and push the TOYOTA hand-held tester main switch ON.
(c) Select the ACTIVE TEST mode on the TOYOTA hand-held tester.

CHECK:

Check that "ON" and "OFF" of the ABS warning light can be shown on the combination meter by the TOYOTA hand-held tester.

In case of not using the TOYOTA hand-held tester:

PREPARATION:

(a) Turn the ignition switch OFF.
(b) Disconnect the connector from the ABS & BA & TRAC & VSC ECU.
(c) Turn the ignition switch ON.

CHECK:

Check the ABS warning light goes on.

OK → **Check and replace combination meter (See page BE-2).**

NG

6	**Check for short circuit in harness and connector between active lamp relay and ABS & BA & TRAC & VSC ECU (See page IN-30).**

NG → **Repeir or replace harness or connector.**

OK

Check and replace ABS & BA & TRAC & VSC ECU.

BRAKE Warning Light Circuit

CIRCUIT DESCRIPTION

- The BRAKE warning light lights up when the brake fluid is insufficient, when the parking brake is applied or when the EBD is defective.
- If the translate ECU detects trouble, it makes VSC warning light lights up while prohibiting VSC & TRAC control. At this time, the ECU records a DTC in memory. Connect terminals Tc and E_1 of the DLC1 or DLC2 to make BRAKE warning light blink and output the DTC.

WIRING DIAGRAM

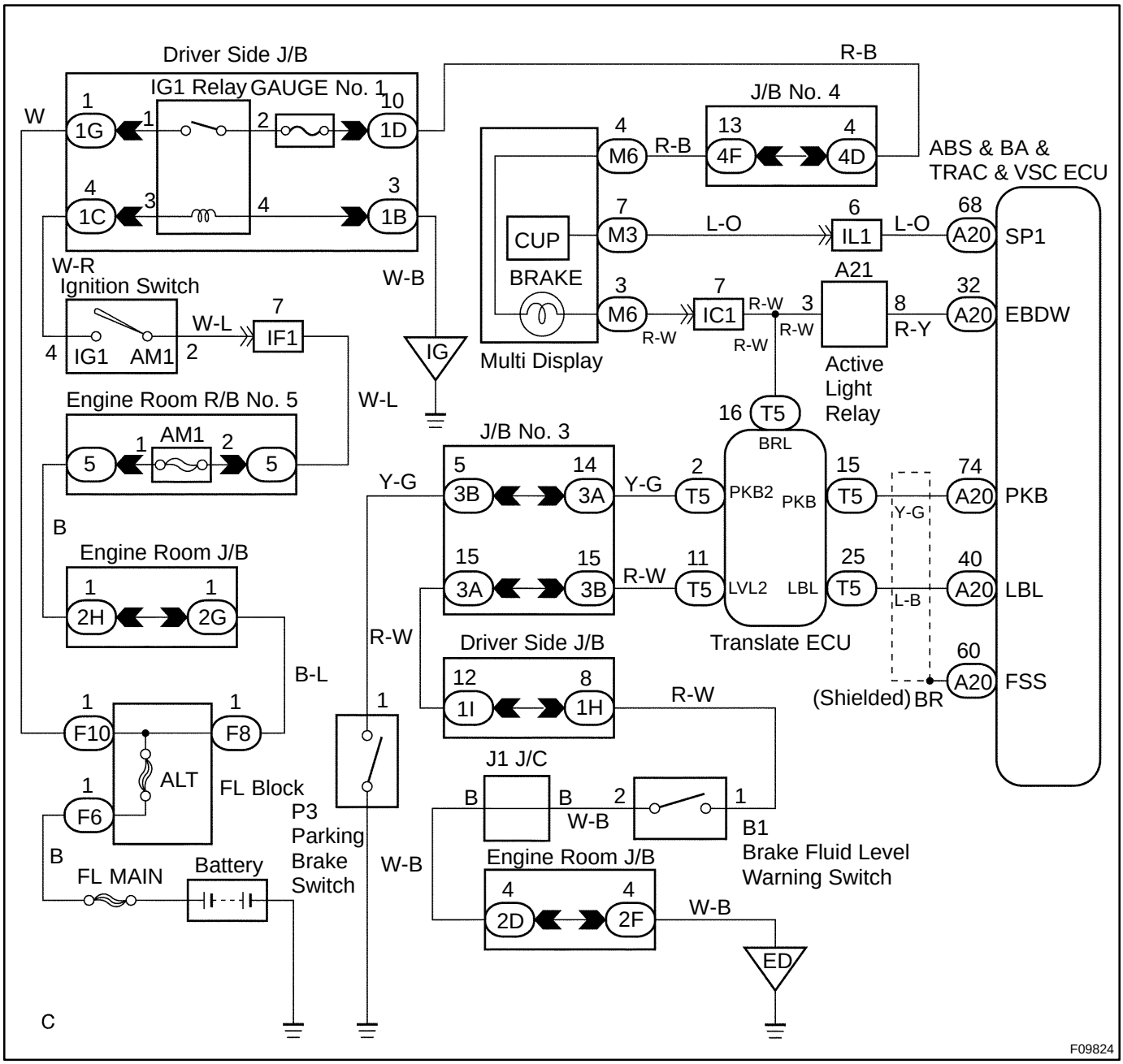

INSPECTION PROCEDURE

1	Check parking brake switch circuit (See page BE-53).

NG → Repair or replace parking brake switch circuit.

OK

2	Check brake fluid level warning switch circuit (See page BE-53).

NG → Repair or replace brake fluid level warning switch circuit.

OK

3	Is DTC output for ABS ?

YES → Repair circuit indicated by the output code.

No

4	Check BRAKE warning light.

See combination meter troubleshooting on page BE-2 .

NG → Repair or replace combination meter.

OK

5	Check active lamp relay.

NG → Replace active lamp relay.

OK

6	Check for open or short circuit in harness and connector between combination meter and active lamp relay (See page IN-30).

NG → Repair or replace harness or connector.

OK

7	Check for open or short circuit in harness and connector between active lamp relay and ABS & BA & TRAC & VSC ECU (See page IN-30).

NG → Repair or replace harness or connector.

OK

Check and replace ABS & BA & TRAC & VSC ECU.

DI6NX-03

CIRCUIT INSPECTION

DTC	C0200 / 31 - C1331 / 36	Speed Sensor Circuit

DTC	C1332 / 38, C1333 / 39	Speed Sensor Circuit

CIRCUIT DESCRIPTION

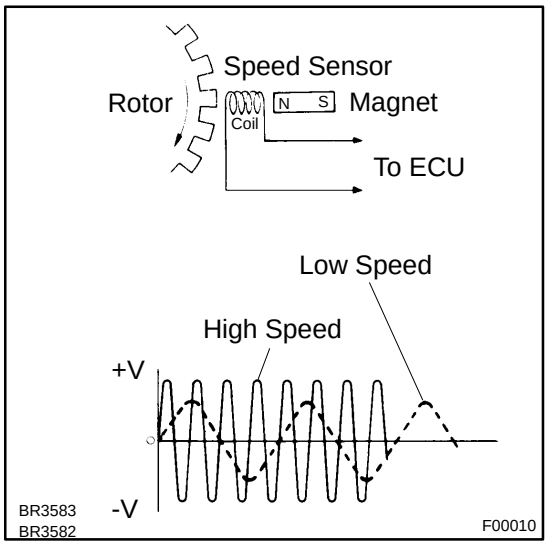

The speed sensor detects a wheel speed and sends the appropriate signals to the ECU. These signals are used to control of the ABS and VSC system. Each of the front and rear rotors has 48 serrations.

When the rotors rotate, a magnetic field emitted by a permanent magnet in the speed sensor generates an AC voltage. Since the frequency of this AC voltage changes in direct proportion to the speed of the rotor, the frequency is used by the ECU to detect the speed of each wheel.

DTC No.	DTC Detecting Condition	Trouble Area
C0200 / 31 C0205 / 32 C0210 / 33 C0215 / 34	When any of the following 1. to 3. is detected : 1. Vehicle speed is more than 40 km/h (25 mph), pulses are not input for 0.01 sec. 2. After the initial start or restart and when the vehicle speed has reached 12 km/h (7 mph), the wheel speed of 0 km/h (0 mph) is detected. 3. After the initial start or restart and when the vehicle speed has reached 18 km/h (11 mph), the front wheel speed of 0 km/h (0 mph) is detected.	●Right front, left front, right rear, left rear speed sensor ●Each speed sensor circuit ●Sensor installation
C1330 / 35 C1331 / 36 C1332 / 38 C1333 / 39	Detecting abnormality in the resistance value of each speed sensor.	●Right front, left front, right rear, left rear speed sensor ●Each speed sensor circuit

HINT:

- DTC No. C0200 / 31 and C1330 / 35 are for the right front speed sensor.
- DTC No. C0205 / 32 and C1331 / 36 are for the left front speed sensor.
- DTC No. C0210 / 33 and C1332 / 38 are for the right rear speed sensor.
- DTC No. C0215 / 34 and C1333 / 39 are for the left rear speed sensor.

WIRING DIAGRAM

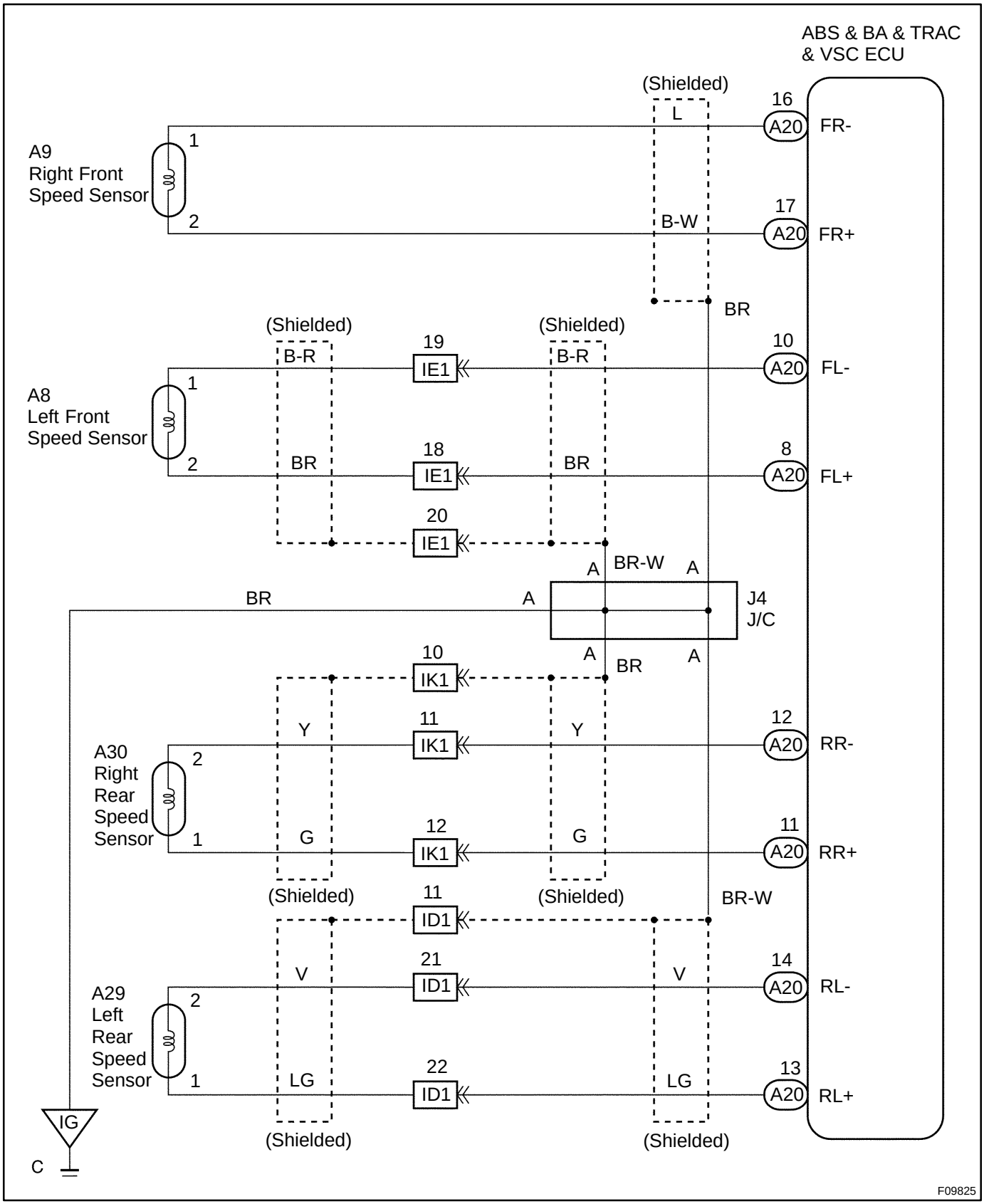

INSPECTION PROCEDURE

1	**Check speed sensor.**

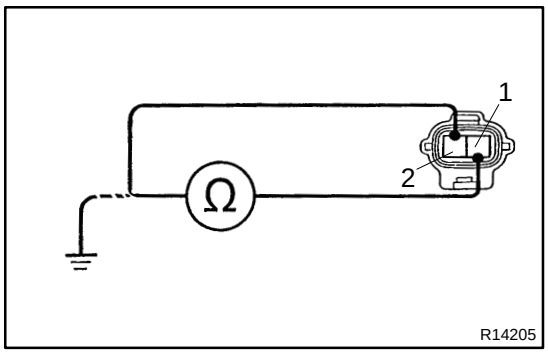

Front:

PREPARATION:

(a) Remove the front fender liner.

(b) Disconnect the speed sensor connector.

CHECK:

Measure the resistance between terminals 1 and 2 of speed sensor connector.

OK:

Resistance: 0.6 - 2.5 kΩ (1.6 ± 0.2 kΩ at 20 ˚C)

CHECK:

Measure the resistance between terminals 1 and 2 of speed sensor connector and body ground.

OK:

Resistance: 1 MΩ or higher

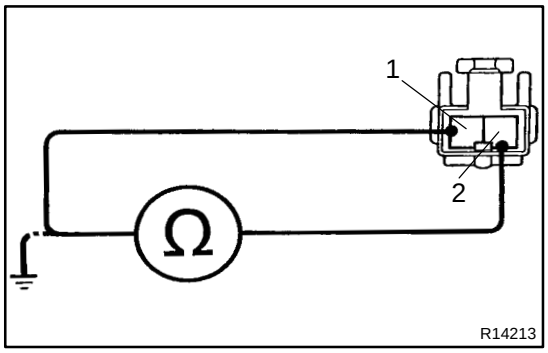

Rear:

PREPARATION:

(a) Remove the seat cushion and seatback.

(b) Disconnect the speed sensor connector.

CHECK:

Measure the resistance between terminals 1 and 2 of speed sensor connector.

OK:

Resistance: 1.2 - 2.3 kΩ (1.6 ± 0.1 kΩ at 20 ˚C)

CHECK:

Measure the resistance between terminals 1 and 2 of speed sensor connector and body ground.

OK:

Resistance: 1 MΩ or higher

NG → **Replace speed sensor.**

NOTICE:

Check the speed sensor signal last (See page DI-252).

OK

2	**Check for open and short circuit in harness and connector between each speed sensor and ABS & BA & TRAC & VSC ECU (See page IN-30).**

NG → **Repair or replace harness or connector.**

OK

3	**Check speed sensor installation.**

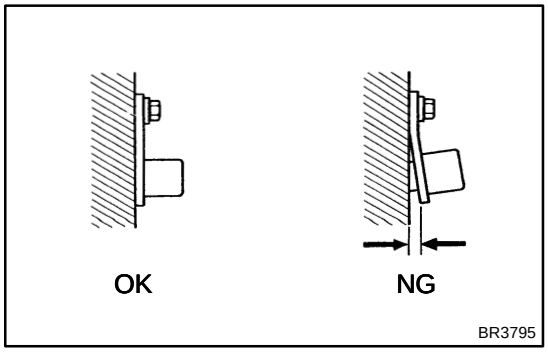

CHECK:
Check the speed sensor installation.
OK:

The installation bolt shall be tightened properly and no clearance is allowed between the sensor and front steering knuckle or rear axle carrier.

NG → **Replace speed sensor.**

NOTICE:
Check the speed sensor signal last (See page DI-252).

OK

4	Check speed sensor and sensor rotor serrations.

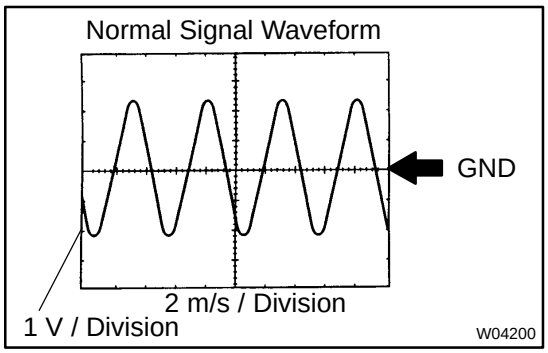

REFERENCE: INSPECTION USING OSCILLOSCOPE

PREPARATION:

(a) Disconnect the connector from the ABS & BA & TRAC & VSC ECU.

(b) Connect the oscilloscope to the terminals FR+, FL+, RR+ or RL+ and GND of the ECU harness side connector.

CHECK:

Drive the vehicle at about 30 km/h (19 mph), and check the signal waveform.

OK	Check and replace ABS & BA & TRAC & VSC ECU.

NG

5	Check sensor rotor and sensor tip.

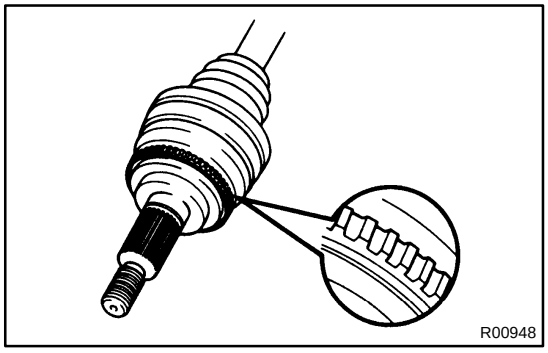

Front:

PREPARATION:

Remove the front drive shaft (See page SA-16).

CHECK:

Check the sensor rotor serrations.

OK:

No scratches, missing teeth or foreign objects.

PREPARATION:

Remove the front speed sensor (See page BR-60).

CHECK:

Check the sensor tip.

OK:

No scratches or foreign objects on the sensor tip.

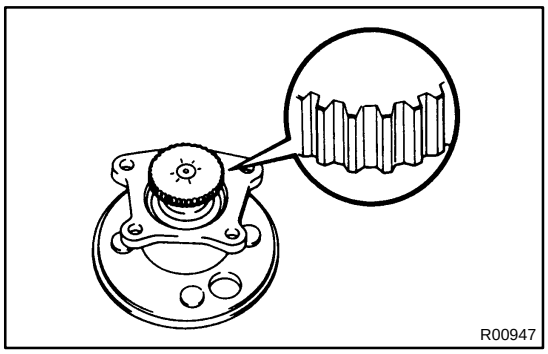

Rear:

PREPARATION:

Remove the axle hub (See page SA-45).

CHECK:

Check the sensor rotor serrations.

OK:

No scratches, missing teeth or foreign objects.

PREPARATION:

Remove the rear speed sensor (See page BR-63).

CHECK:

Check the sensor tip.

OK:

No scratches or foreign objects on the sensor tip.

NG → **Replace sensor rotor or speed sensor.**

NOTICE:

Check the speed sensor signal last (See page DI-252).

OK

Check and replace ABS & BA & TRAC & VSC ECU.

DI6NY-03

DTC	C0226 / 21 - C1228 / 28	Brake Actuator Solenoid Circuit

CIRCUIT DESCRIPTION

This solenoid goes on when signals are received from the ECU and controls the pressure acting on the wheel cylinders thus controlling the braking force.

DTC No.	DTC Detecting Condition	Trouble Area
C0226 / 21	Open or short in SFRR or SFRH circuit.	●Brake actuator ●SFRR or SFRH circuit
C0236 / 22	Open or short in SFLR or SFLH circuit.	●Brake actuator ●SFLR or SFLH circuit
C0246 / 23	Open or short in SRRR or SRRH circuit.	●Brake actuator ●SRRR or SRRH circuit
C0256 / 24	Open or short in SRLR or SRLH circuit.	●Brake actuator ●SRLR or SRLH circuit
C1225 / 25	Open or short circuit for SMC1 circuit.	●Brake actuator ●SMC1 circuit
C1226 / 26	Open or short circuit for SMC2 circuit.	●Brake actuator ●SMC2 circuit
C1227 / 27	Open or short circuit for SRC1 circuit.	●Brake actuator ●SRC1 circuit
C1228 / 28	Open or short circuit for SRC2 circuit.	●Brake actuator ●SRC2 circuit

WIRING DIAGRAM

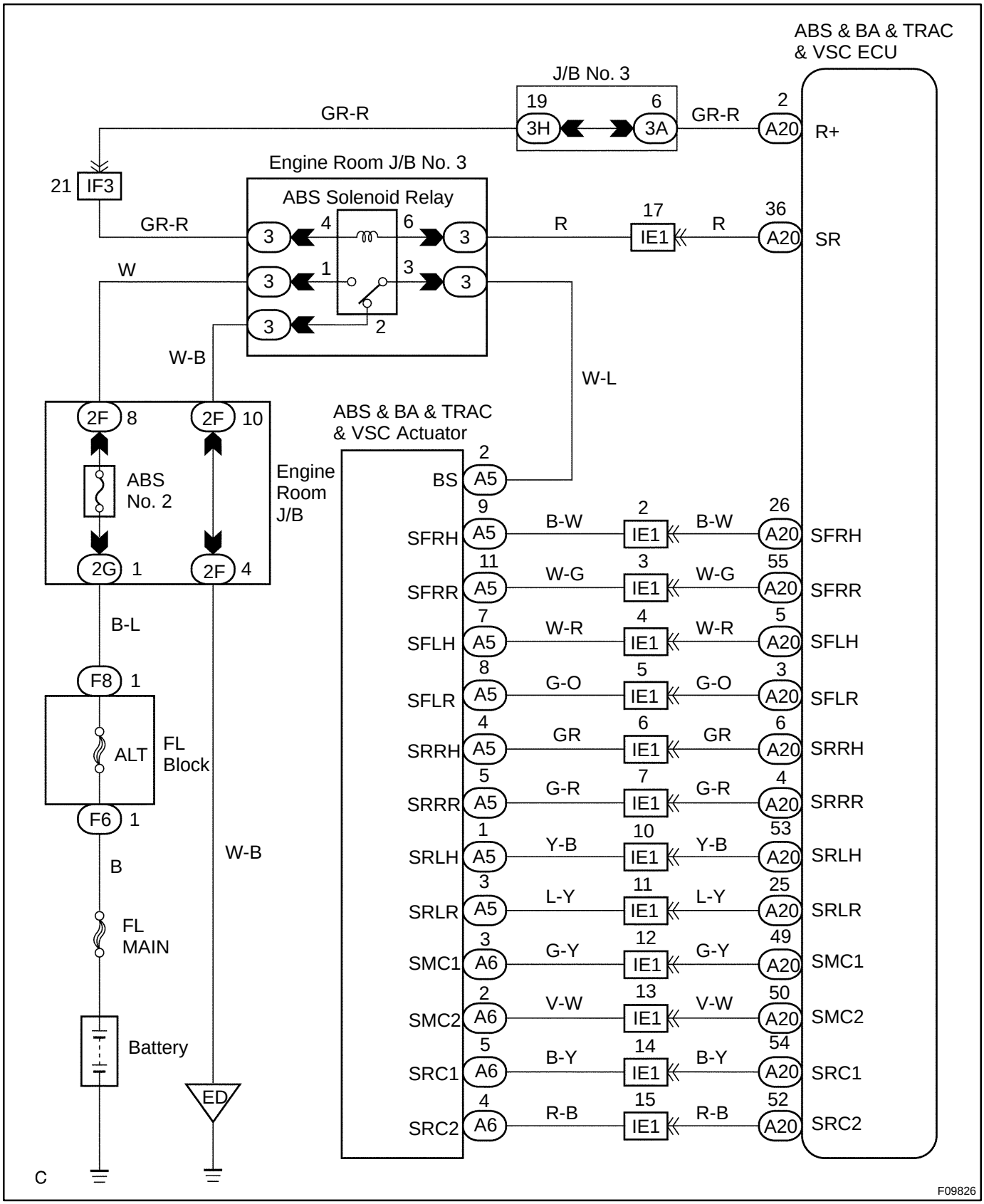

INSPECTION PROCEDURE

1	**Check brake actuator solenoid.**

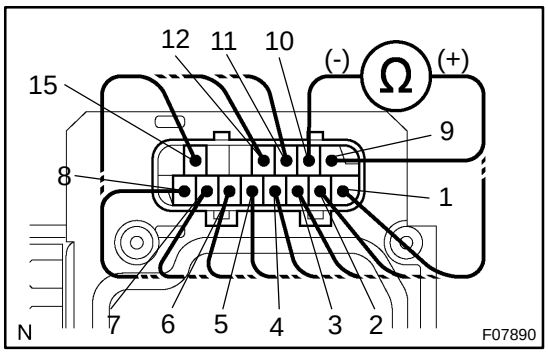

PREPARATION:
Disconnect the connector from brake actuator.
CHECK:
Check continuity between terminals 10 and each of 1, 2, 3, 4, 5, 6, 7, 8, 9, 11, 12, 15 of brake actuator connector.
OK:

Continuity

NG → **Replace brake actuator.**

OK

2	**Check for open and short circuit in harness and connector between ABS & BA & TRAC & VSC ECU and brake actuator (See page IN-30).**

NG → **Repair or replace harness or connector.**

OK

If the same code is still output after the DTC is deleted, check the contact condition of each connection. If the connections are normal, the ECU may be defective.

DI6NZ-03

DTC	C0273 / 13	ABS Motor Relay Circuit

CIRCUIT DESCRIPTION

The ABS motor relay supplies power to the brake actuator pump motor. While the ABS & BA & TRAC & VSC are activated, the ECU switches the motor relay ON and operates the brake actuator pump motor.

DTC No.	DTC Detecting Condition	Trouble Area
C0273 / 13	Open or short circuit is detected.	●ABS motor relay ●ABS motor relay circuit

WIRING DIAGRAM

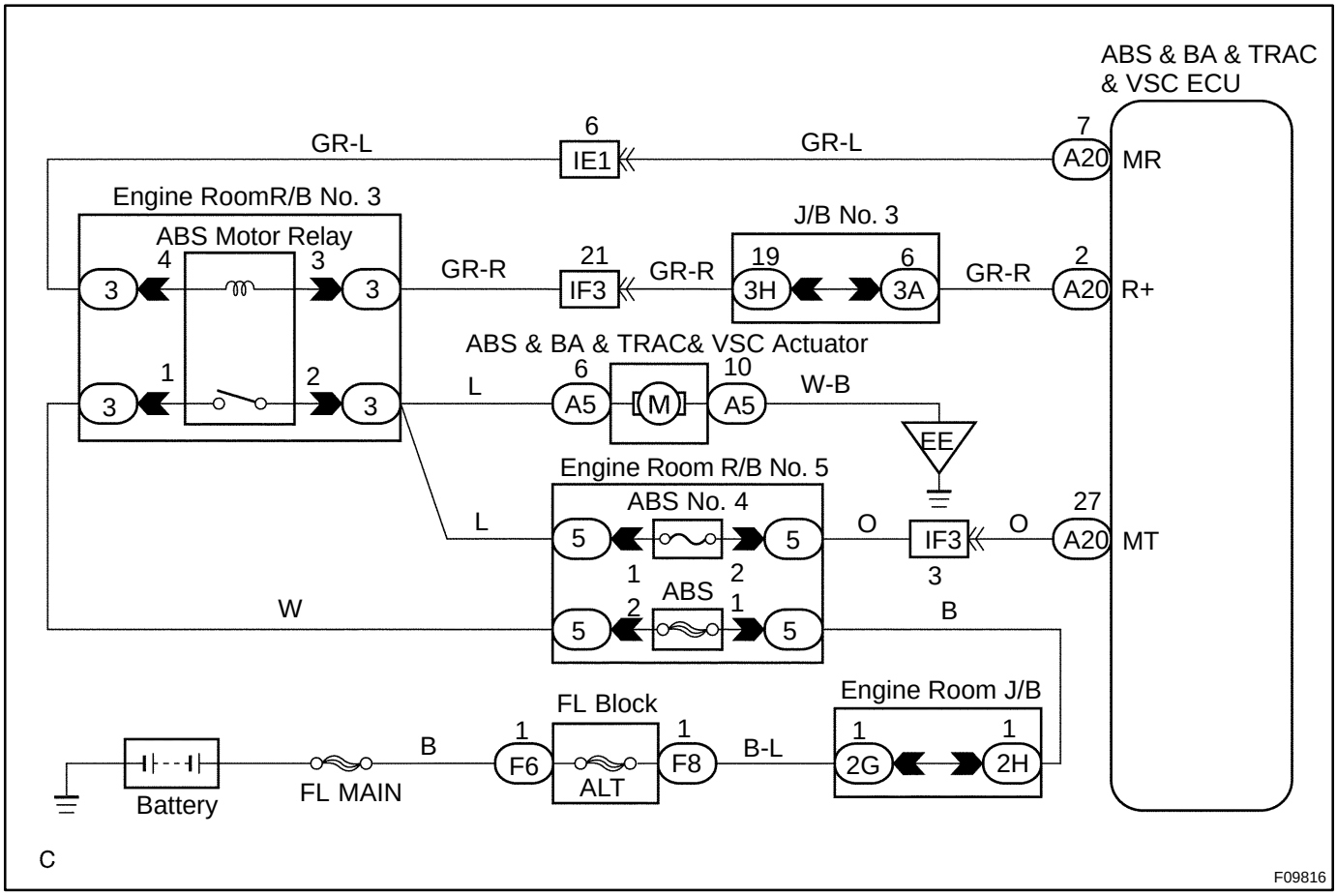

INSPECTION PROCEDURE

HINT:

Start the inspection from step 1 in case of using the TOYOTA hand-held tester and start from step 2 in case of not using the TOYOTA hand-held tester.

1	**Check ABS motor relay operation.**

PREPARATION:

(a) Connect the TOYOTA hand-held tester to the DLC3.
(b) Turn the ignition switch ON and push the TOYOTA hand-held tester main switch ON.
(c) Select the ACTIVE TEST mode on the TOYOTA hand-held tester.

CHECK:

Check the operation sound of the ABS motor relay individually when operating it with the TOYOTA hand-held tester.

OK:

The operation sound of the ABS motor relay should be heard.

NG → **Go to step 3.**

OK

2	**Check for short circuit in harness and connector between BM of motor relay and brake actuator and MT of ABS & BA & TRAC & VSC ECU (See page IN-30).**

OK → **Check and replace ABS & BA & TRAC & VSC ECU.**

NG

3	Check voltage between terminal 1 of engine room R/B No. 8 (for ABS motor relay) and body ground.

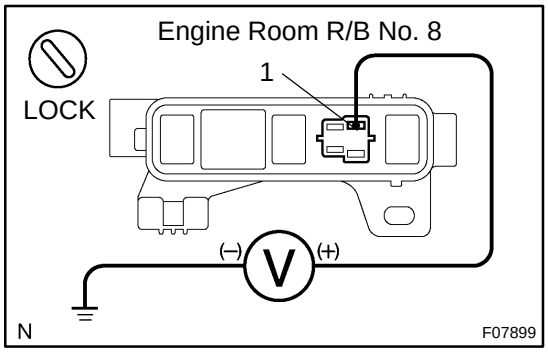

PREPARATION:
Remove ABS motor relay from engine room R/B No. 8.
CHECK:
Measure the voltage between terminal 1 of engine room R/B No. 8 (for ABS motor relay) and body ground.
OK:

Voltage: 10 - 14 V

NG	Check and repair harness or connector.

OK

4	Check ABS motor relay.

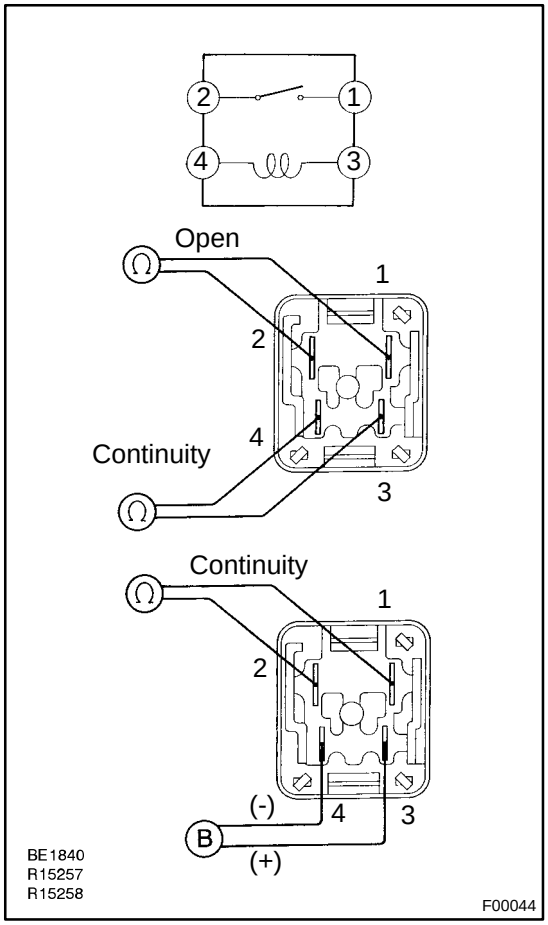

CHECK:
Check continuity between following terminals of motor relay.
OK:

Terminals 3 and 4	Continuity (Reference value 62 Ω)
Terminals 1 and 2	Open

CHECK:
(a) Apply battery positive voltage between terminals 3 and 4.
(b) Check continuity between terminals.
OK:

Terminals 1 and 2	Continuity

NG	Replace ABS motor relay.

OK

5	**Check continuity between terminal BM (2) of engine room R/B No. 8 (for ABS motor relay) and terminal MT (27) of ABS & BA & TRAC & VSC ECU.**

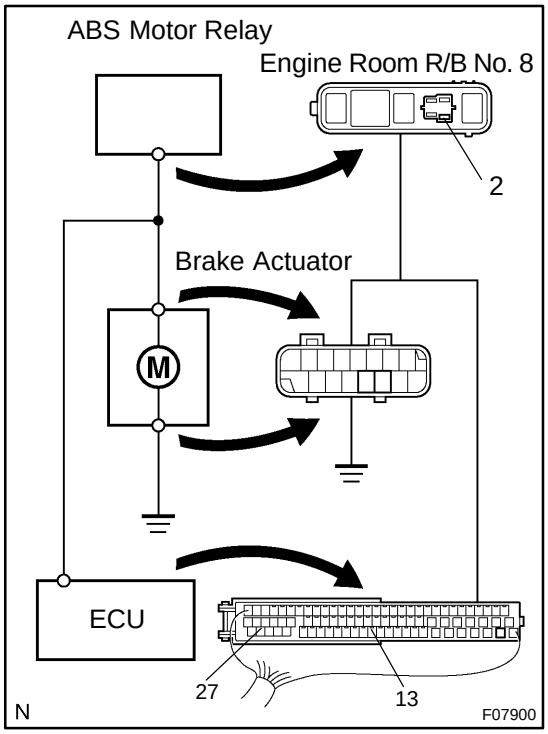

PREPARATION:

Disconnect the connector from the ABS & BA & TRAC & VSC ECU.

CHECK:

(a) Check continuity between terminal BM (2) of engine room R/B No. 8 and terminal GND (28) of ABS & BA & TRAC & VSC ECU.

(b) Check continuity between terminal BM (2) of engine room R/B No. 8 and terminal MT (27) of ABS & BA & TRAC & VSC ECU.

OK:

Continuity

NG → **Repair or replace harness or brake actuator.**

OK

6	**Check for open and short circuit in harness and connector between ABS motor relay and ABS & BA & TRAC &VSC ECU (See page IN-30).**

NG → **Repair or replace harness or connector.**

OK

If the same code is still output after the DTC is deleted, check the contact condition of each connection. If the connections are normal, the ECU may be defective.

DI6O0-03

DTC	C0278 / 11	ABS Solenoid Relay Circuit

CIRCUIT DESCRIPTION

This relay supplies power to each ABS solenoid. After the ignition switch is turned ON, if the initial check is OK, the relay goes on.

DTC No.	DTC Detecting Condition	Trouble Area
C0278 / 11	Detection of any conditions from 1. through 2.: 1. 3 or more solenoids are show faulty in response and simultaneously solenoid supply voltage is detected faulty. 2. Solenoid relay will not be switched OFF.	●ABS solenoid relay ●ABS solenoid relay circuit

WIRING DIAGRAM

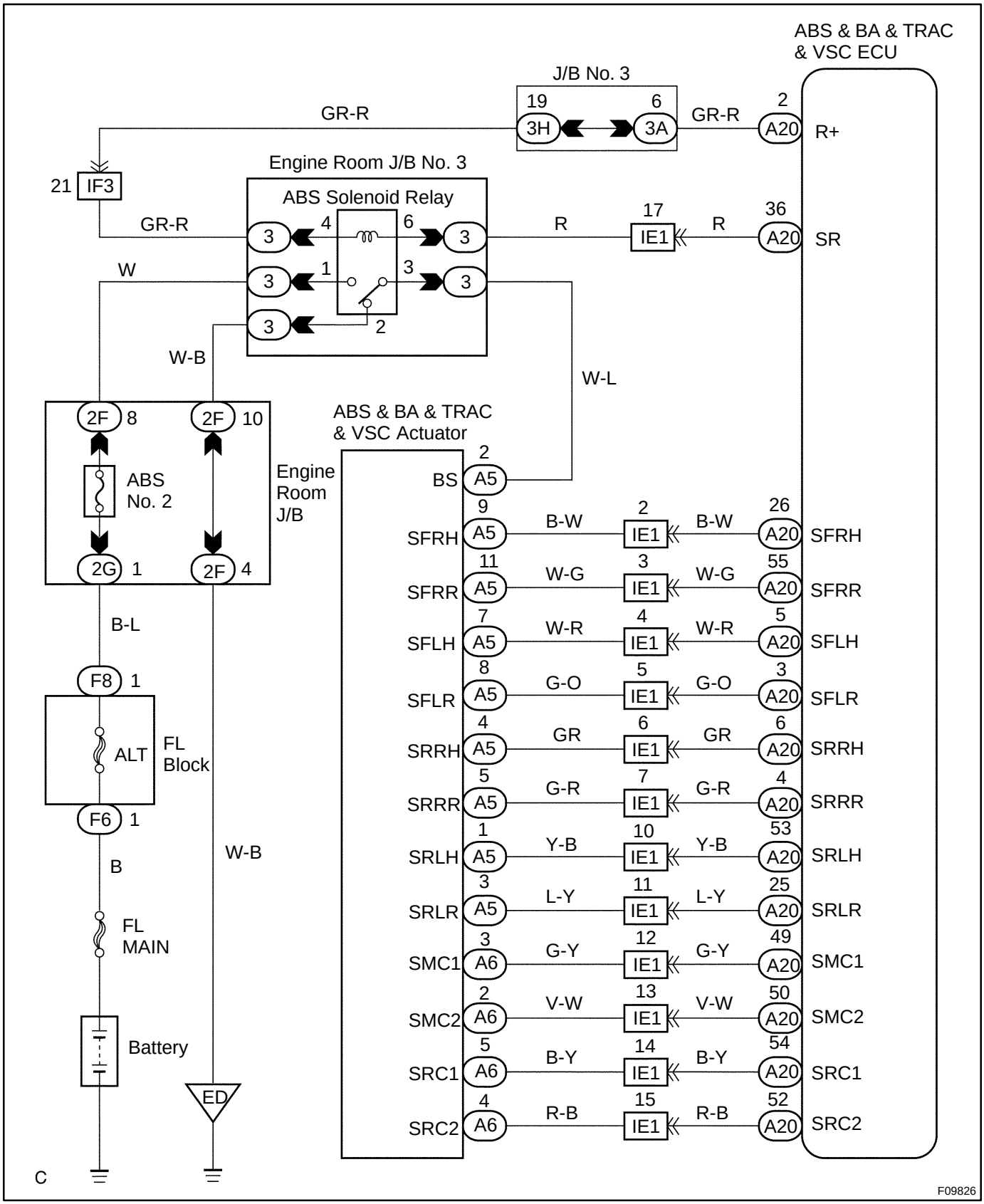

INSPECTION PROCEDURE

1	**Check voltage between terminals 1 and 2 of engine room R/B No. 8 (for ABS solenoid relay).**

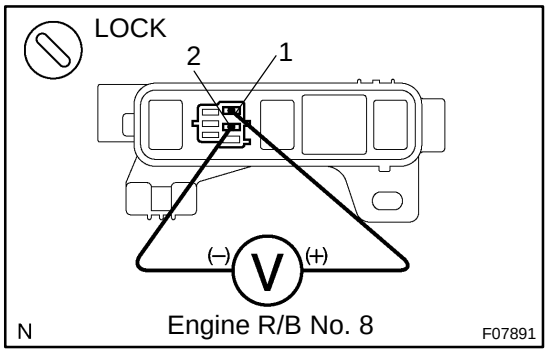

PREPARATION:
Remove the ABS solenoid relay from engine room R/B No. 8.
CHECK:
Measure the voltage between terminals 1 and 2 of engine room R/B No. 8 (for ABS solenoid relay).
OK:

Voltage: 10 - 14 V

NG → **Check and repair harness or connector.**

OK

2	Check ABS solenoid relay.

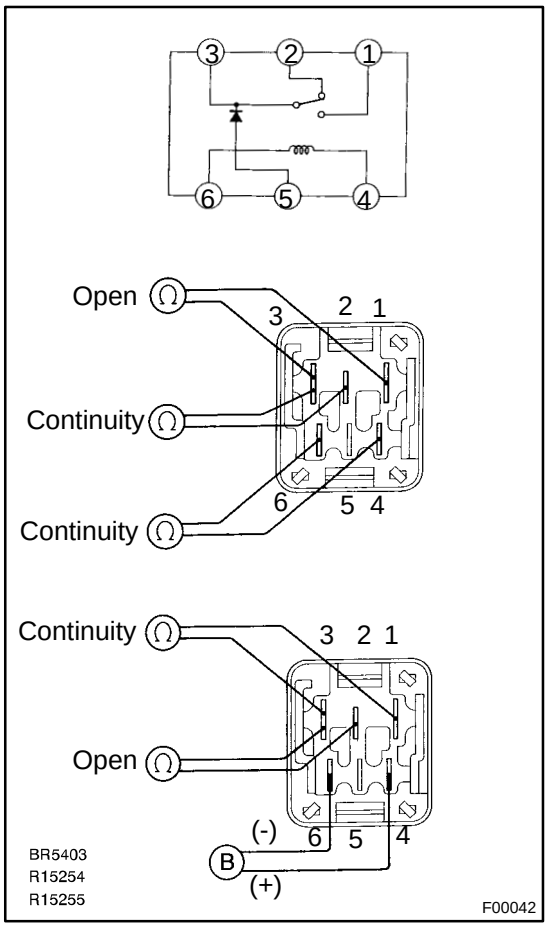

CHECK:

Check continuity between following terminals of ABS solenoid relay.

OK:

Terminals 4 and 6	Continuity (Reference value 80 Ω)
Terminals 2 and 3	Continuity
Terminals 1 and 3	Open

CHECK:

(a) Apply battery positive voltage between terminals 4 and 6.

(b) Check continuity between following terminals of ABS solenoid relay.

OK:

Terminals 2 and 3	Open
Terminals 1 and 3	Continuity

NG → **Replace ABS solenoid relay.**

OK

3	**Check continuity between terminal 3 of engine room R/B No. 8 (for ABS solenoid relay) and each solenoid terminal of ABS & BA & TRAC & VSC ECU.**

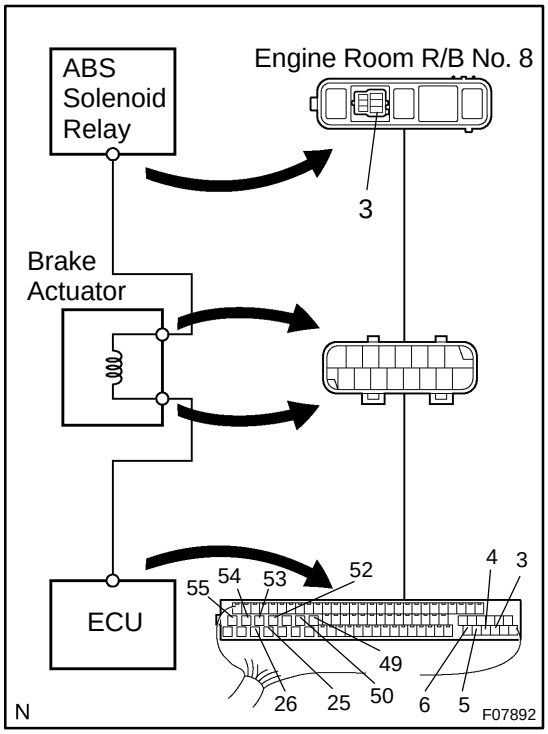

PREPARATION:

Disconnect the connector from the ABS & BA & TRAC & VSC ECU.

CHECK:

Check continuity between terminal 3 of engine room R/B No. 8 and each terminal, 3, 4, 5, 6, 25, 26, 49, 50, 52, 53, 54 and 55 of ECU harness side connector.

OK:

Continuity

HINT:

Resistance of each solenoid coil.

SFLH (5), SRRH (6), SFRH (26), SMC1 (49), SMC2 (50), SRLH (53): 8 - 9.1 Ω

SFLR (3), SRRR (4), SRLR (25), SRC2 (52), SRC1 (54), SFRR (55): 4.0 - 4.6 Ω

NG → **Repair or replace harness or brake actuator.**

OK

4	**Check for open and short circuit in harness and connector between ABS solenoid relay and ABS & BA & TRAC & VSC ECU (See page IN-30).**

NG → **Repair or replace harness or connector.**

OK

If the same code is still output after the DTC is deleted, check the contact condition of each connection. If the connections are normal, the ECU may be defective.

DI6O1-03

DTC	C0365 / 43	Deceleration Sensor Circuit

CIRCUIT DESCRIPTION

Deceleration sensor is combined with yaw rate sensor.

DTC No.	DTC Detecting Condition	Trouble Area
C0365 / 43	Detection of any of conditions from 1. through 4.: 1. The sensor signal is out of range, less than 0.25 V or more than 4.75 V. 2. Deceleration difference between sensor signal and reference value is large. 3. Offset value of sensor signal is higher than the standard value. 4. sensor signal change rapidly higher than the value at the normal condition.	●Deceleration sensor ●Deceleration sensor circuit

WIRING DIAGRAM

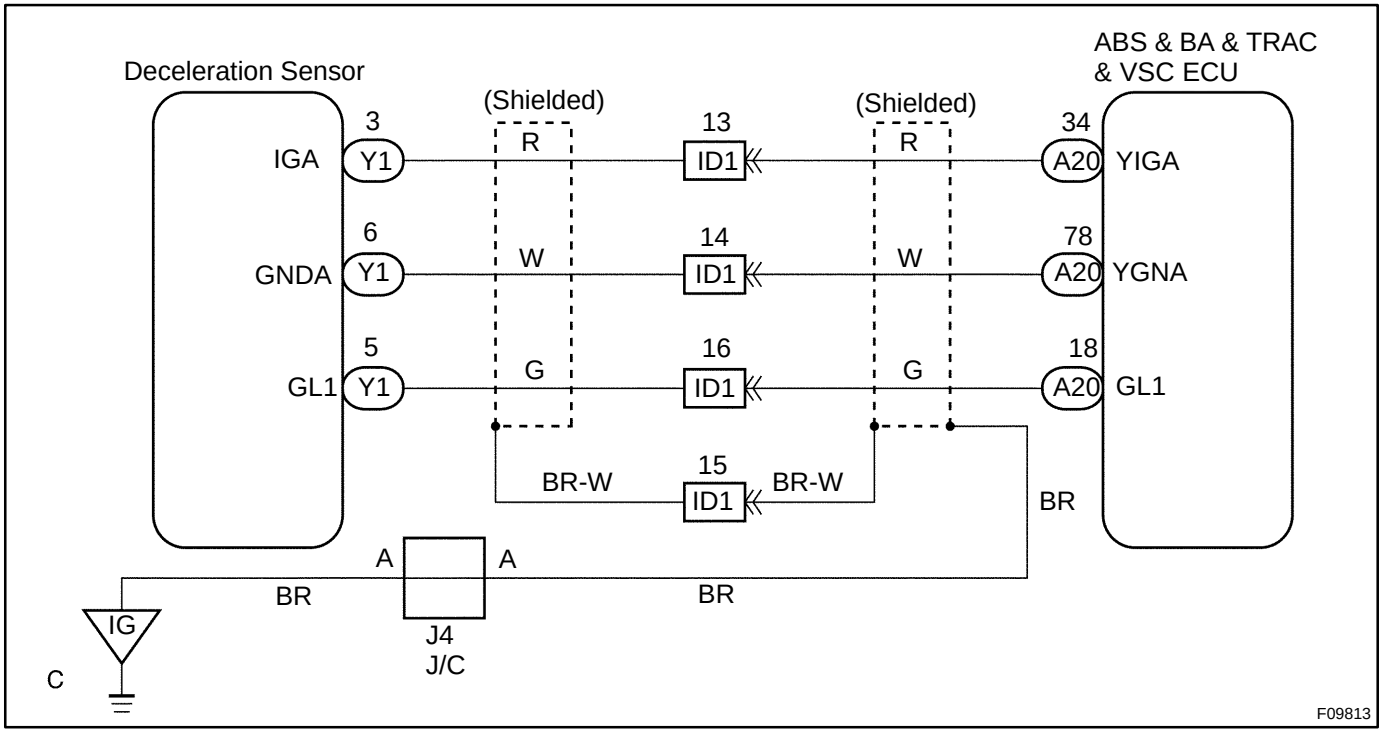

INSPECTION PROCEDURE

HINT:
Start the inspection from step 1 in case of using the TOYOTA hand-held tester and start from step 2 in case of not using the TOYOTA hand-held tester.

1	**Check output value of the deceleration sensor.**

PREPARATION:
(a) Connect the TOYOTA hand-held tester to the DLC3.
(b) Turn the ignition switch ON and push the TOYOTA hand-held tester main switch ON.
(c) Select the DATALIST mode on the TOYOTA hand-held tester.

CHECK:
Check that the deceleration value of the deceleration sensor displayed on the TOYOTA hand-held tester is changing when tilting the vehicle.

OK:
Deceleration value must be changing.

OK → **Check and replace ABS & BA & TRAC & VSC ECU.**

NG

2	**Check deceleration sensor (See page DI-252).**

NG → **Replace deceleration sensor.**

OK

3	**Check for open or short circuit in harness and connector between deceleration sensor and ABS & BA & TRAC & VSC ECU (See page IN-30).**

NG → **Repair or replace harness and connector.**

OK

Check and replace ABS & BA & TRAC & VSC ECU.

DI6O2-03

DTC	C0371 / 55	Yaw Rate Sensor Circuit

CIRCUIT DESCRIPTION

DTC No.	DTC Detecting Condition	Trouble Area
C0371 / 55	Detection of any of conditions from 1. through 4.: 1. The voltage of sensor signal is out of range. 2. The offset value of sensor signal is outside the plausible range. 3. Sensor signal change rapidly under normal driving. 4. Sensor is more or worse sensitivity than reference yaw rate during cornering.	●Yaw rate sensor ●Yaw rate sensor circuit

WIRING DIAGRAM

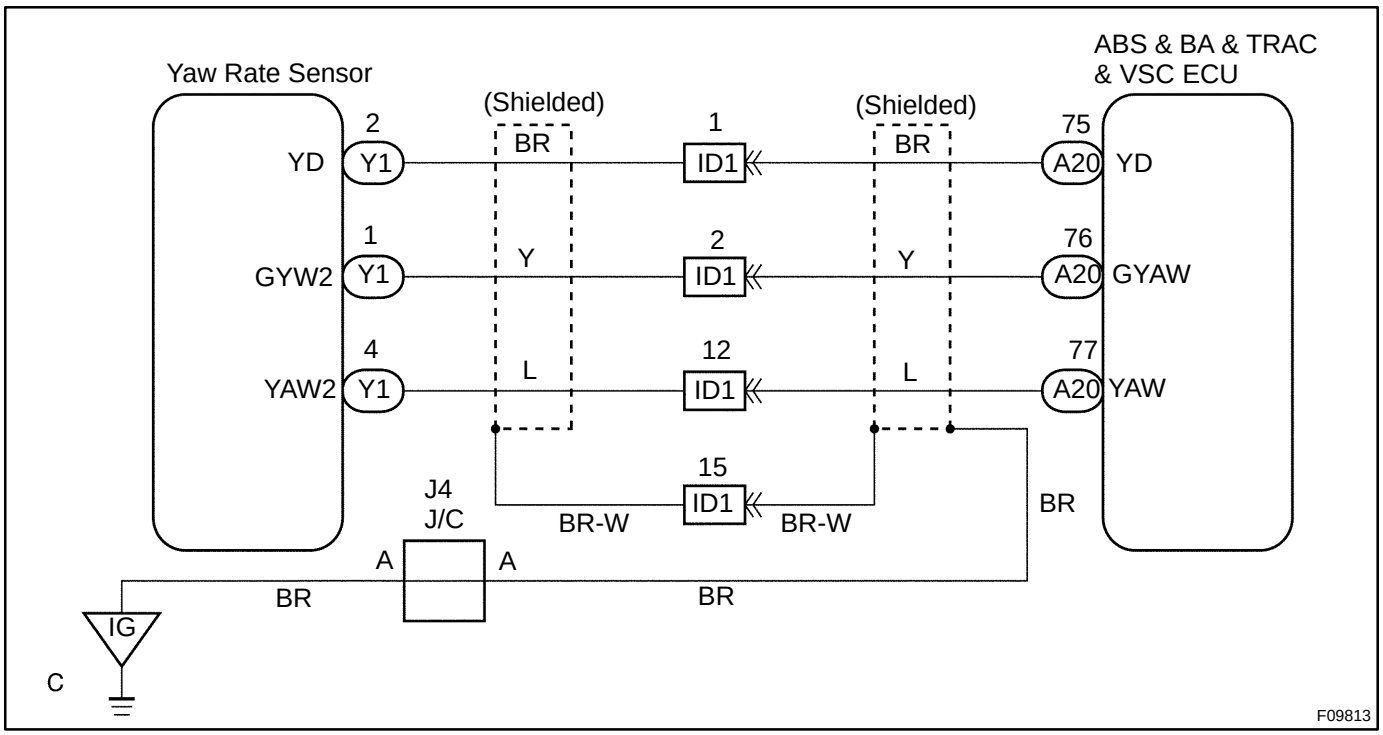

INSPECTION PROCEDURE

HINT:

Start the inspection from step 1 in case of using the TOYOTA hand-held tester and start from step 2 in case of not using the TOYOTA hand-held tester.

1	**Check output value of the yaw rate sensor.**

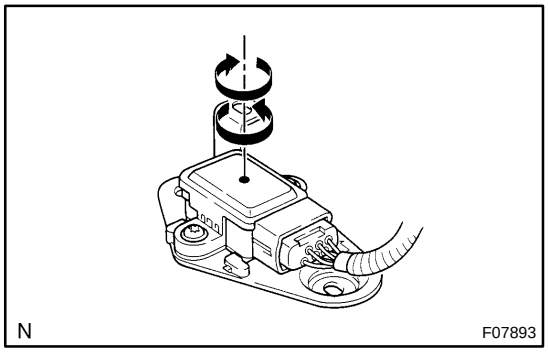

PREPARATION:

(a) Remove the 2 bolts and yaw rate sensor with connector still connected.
(b) Connect the TOYOTA hand-held tester to the DLC3.
(c) Turn the ignition switch ON and push the TOYOTA hand-held tester main switch ON.
(d) Select the DATALIST mode on the TOYOTA hand-held tester.

CHECK:

Check that the yaw rate value of the yaw rate sensor displayed on the TOYOTA hand-held tester is changing: Place the yaw rate sensor vertically to the ground and turn the sensor pivoted on its center.

OK:

Yaw rate value must be changing.

OK	**Go to step 3.**

NG

2	**Check whether continuity exists between terminal YD of yaw rate sensor and terminal YD of ABS & BA & TRAC & VSC ECU.**

NG	**Repair or replace harness or connector.**

OK

Check and replace ABS & BA & TRAC & VSC ECU.

3	Check yaw rate sensor.

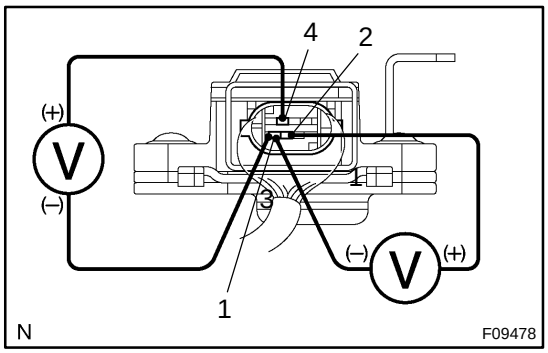

CHECK:

(a) Turn the ignition switch ON.

(b) Measure the voltage between terminals IGA (3) and GYW2 (1), YAW2 (4) and GYW2 (1) of the yaw rate sensor with connector still connected.

OK:

Terminals 3 and 1 (IGA - GYW2)	Approx. 12 V
Terminals 4 and 1 (YAW2 - GYW2)	Approx. 2.5 V

NG → **Replace yaw rate sensor.**

OK

4	Check for open and short circuit in harness and connector between yaw rate sensor and ABS & BA & TRAC & VSC ECU (See page IN-30).

NG → **Repair or replace harness or connector.**

OK

Check and replace ABS & BA & TRAC & VSC ECU.

DI6O3-01

DTC	C1202 / 44	Brake Fluid Level Warning Switch Circuit

CIRCUIT DESCRIPTION

The brake fluid level warning switch sends appropriate signals to the ECU when the brake fluid level is lowered.

HINT:

Depressing the parking brake pedal turns on the brake warning light, but this DTC No. C1202/44 is not output.

DTC No.	DTC Detecting Condition	Trouble Area
C1202 / 44	Fluid level in the brake master cylinder reservoir tank remains low for 60 sec. or more. This means brake fluid warning switch likes on.	●Brake fluid level ●Brake fluid level warning switch ●Brake fluid level warning switch circuit

WIRING DIAGRAM

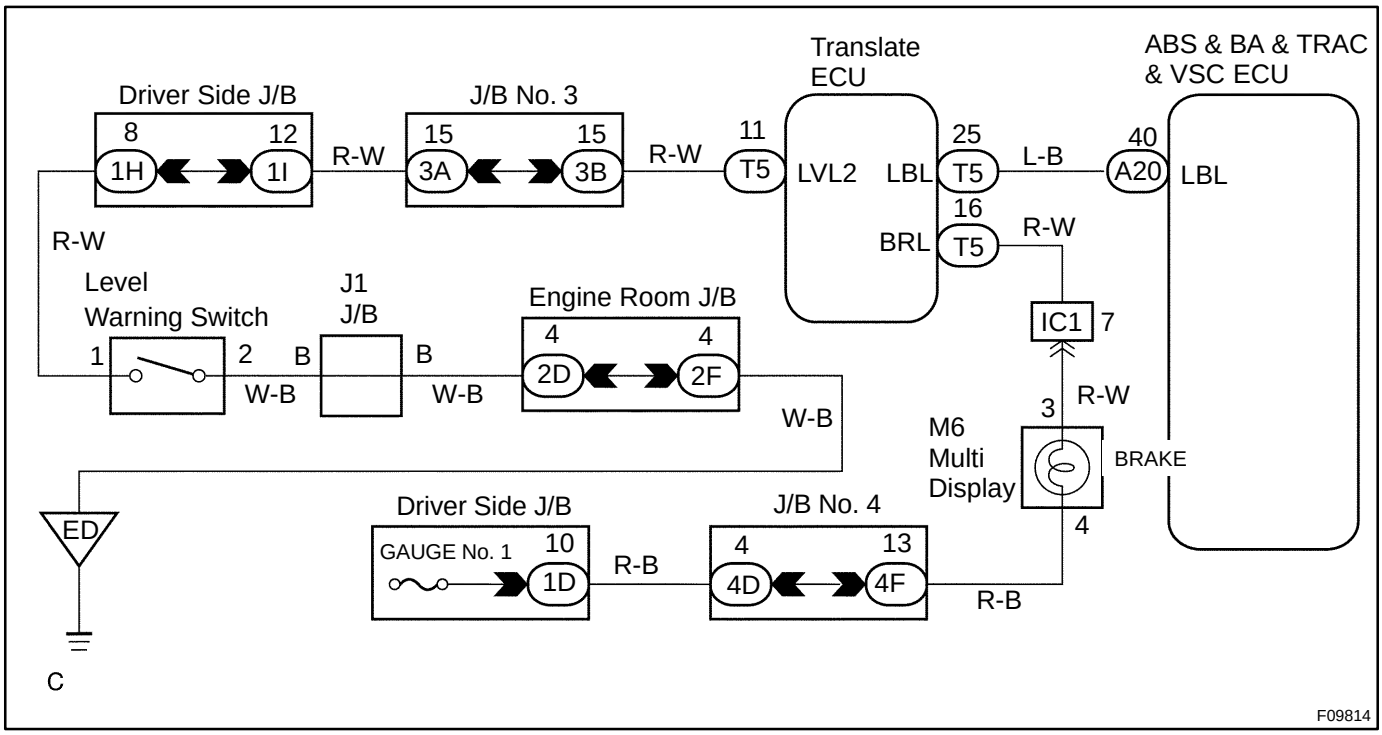

INSPECTION PROCEDURE

1	**Check brake fluid level.**

CHECK:

Check the amount of fluid in the brake reservoir.

NG → **Check for fluid leakage, repair brake line and add fluid.**

OK ↓

2	**Check brake fluid level warning switch (See page BE-53).**

NG → **Replace brake fluid level warning switch.**

OK ↓

3	**Check for open circuit in all the harness and components connected to brake fluid level warning light (See page IN-30).**

NG → **Repair or replace harness or connector.**

OK ↓

Check and replace ABS & BA & TRAC & VSC ECU.

DI6O4-01

DTC	C1208 / 54	Steering Angle Sensor Circuit

CIRCUIT DESCRIPTION

DTC No.	DTC Detecting Condition	Trouble Area
C1208 / 54	Detection of any of conditions 1. through 7: 1. When the condition that ECU terminal IG1 voltage is 9.8 v or more, and does not receive data from steering angle sensor continues for 0.1 sec. or more. 2. Sensor internal failure. 3. The offset value is out of range. 4. Sensor signal change higher. 5. Steering angle value difference between measured and reference is out of range. 6. Steering sensor is not centered. 7. Steering sensor signal is out of range.	●Steering angle sensor ●Steering angle sensor circuit

WIRING DIAGRAM

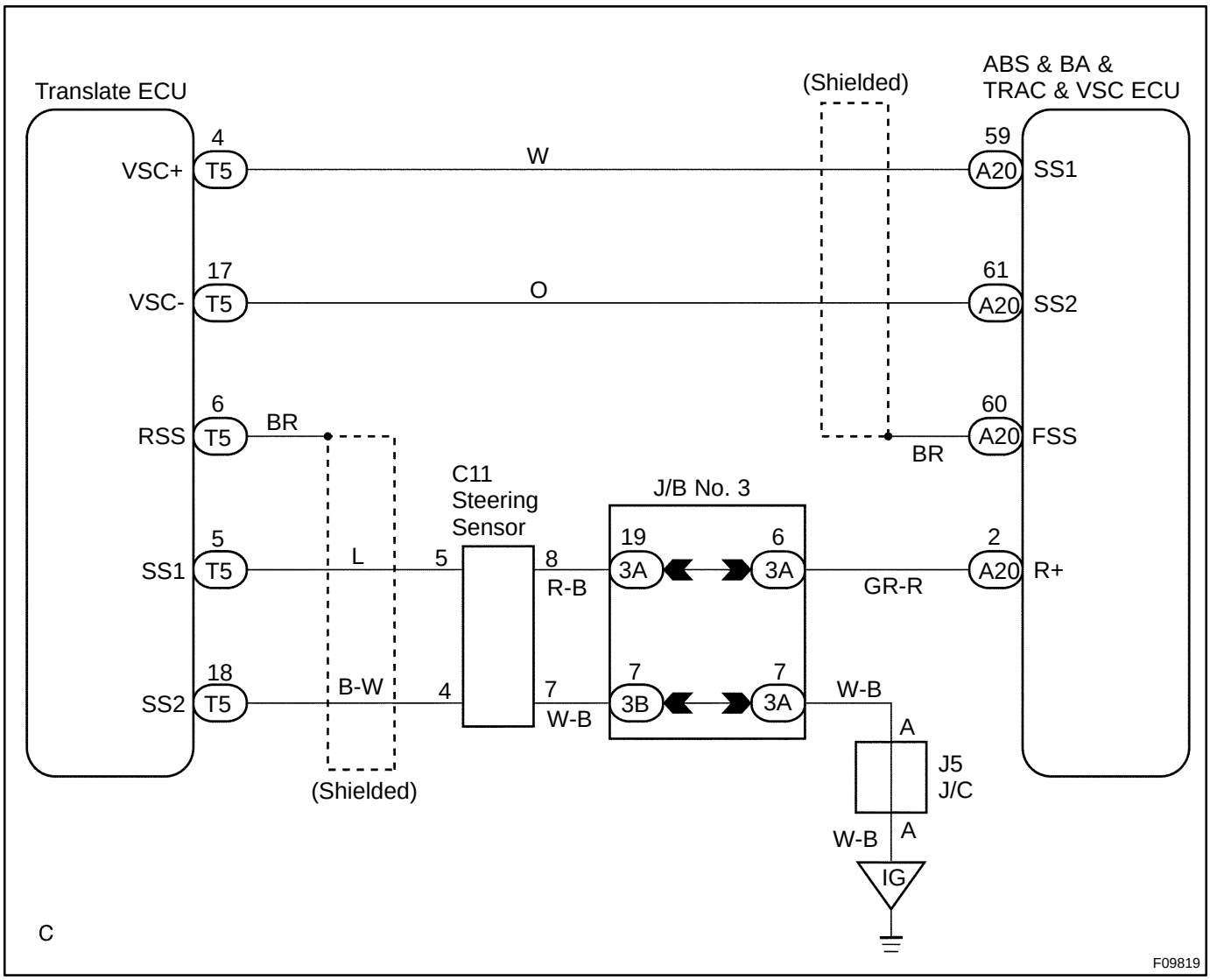

INSPECTION PROCEDURE

HINT:

Start the inspection from step 1 in case of using the TOYOTA hand-held tester and start from step 2 in case of not using the TOYOTA hand-held tester.

1	**Check output value of the steering angle sensor.**

PREPARATION:

(a) Connect the TOYOTA hand-held tester to the DLC3.
(b) Turn the ignition switch ON and push the TOYOTA hand-held tester main switch ON.
(c) Select the DATALIST mode on the TOYOTA hand-held tester.

CHECK:

Check that the steering wheel turning angle value of the steering angle sensor displayed on the TOYOTA hand-held tester is appropriate when turning the steering wheel.

OK:

Steering wheel turning angle value must be appropriate.

OK → **Go to step 4.**

NG

2	**Check the installation condition of steering angle sensor and adapter.**

NG → **Repair or replace steering angle sensor (See page SR-12).**

OK

3	**Check for open and short circuit in harness and connector between steering angle sensor, translate ECU and ABS & BA & TRAC & VSC ECU (See page IN-30).**

NG → **Repair or replace harness or connector.**

OK

4	Calibrate the steering angle sensor (See page DI-252).

NG → Replace steering angle sensor.

OK ↓

5	Is DTC still output?

Check DTC on page DI-252 .

NO → No problem.

YES ↓

6	Replace steering angle sensor. Is DTC still output?

NOTICE:
When replacing the steering angle sensor, perform the zero point calibration (See page DI-252).

NO → No problem.

YES ↓

Replace skid control ECU.

NOTICE:
When replacing the skid control ECU, perform the zero point calibration (See page DI-252).

DI6O5-01

DTC	C1237 / 37	Wrong Number of Teeth at 1 of 4 Wheels

CIRCUIT DESCRIPTION

DTC No.	DTC Detecting Condition	Trouble Area
C1237 / 37	Detection of any of conditions from 1. through 4.: 1. When the ignition switch is ON, the speed difference between the rear right and rear left wheels is 5 km/h (3mph) or more (vehicle speed: 100 km/h (62 mph) or less). 2. When the ignition switch is ON, the slip difference between the reference wheel and any other wheels is 6 % or more (vehicle speed: 100 km/h (62 mph) or more). 3. Continuous ABS control for 60 sec. or more. 4. Interference on 1 or more wheels for 20 sec. with the brake pedal depressed, or for 5 sec. when the brake pedal is not depressed.	●Tire size ●Speed sensor rotor

INSPECTION PROCEDURE

1	**Check tire size.**

NG → **Replace tires so that all 4 tires are the same in size.**

OK ↓

2	**Check sensor rotor (See page DI-267).**

NG → **Replace speed sensor rotor.**

OK ↓

3	**Check speed sensor (See page DI-267).**

NG → **Replace speed sensor.**

OK ↓

4	**Check for open and short circuit in harness and connector between front speed sensor, rear speed sensor and ABS & BA & TRAC & VSC ECU (See page IN-30).**

NG → **Repair or replace harness and connector.**

OK

Check and replace ABS & BA & TRAC & VSC ECU.

DI6O6-03

DTC	C1241 / 41	IG Power Source Circuit

CIRCUIT DESCRIPTION

This is the power source for the ECU, hence the brake actuators.

DTC No.	DTC Detecting Condition	Trouble Area
C1241 / 41	At a vehicle speed of 6 km/h (4 mph) or more, the condition that low battery voltage is 9.8 V or less (during non-operation of ABS control) or 9.4 V or less (during operation of ABS control) and high battery voltage is more than 17.4 V, continues for 0.5 sec. or more.	●Battery ●Charging system ●Power source circuit

WIRING DIAGRAM

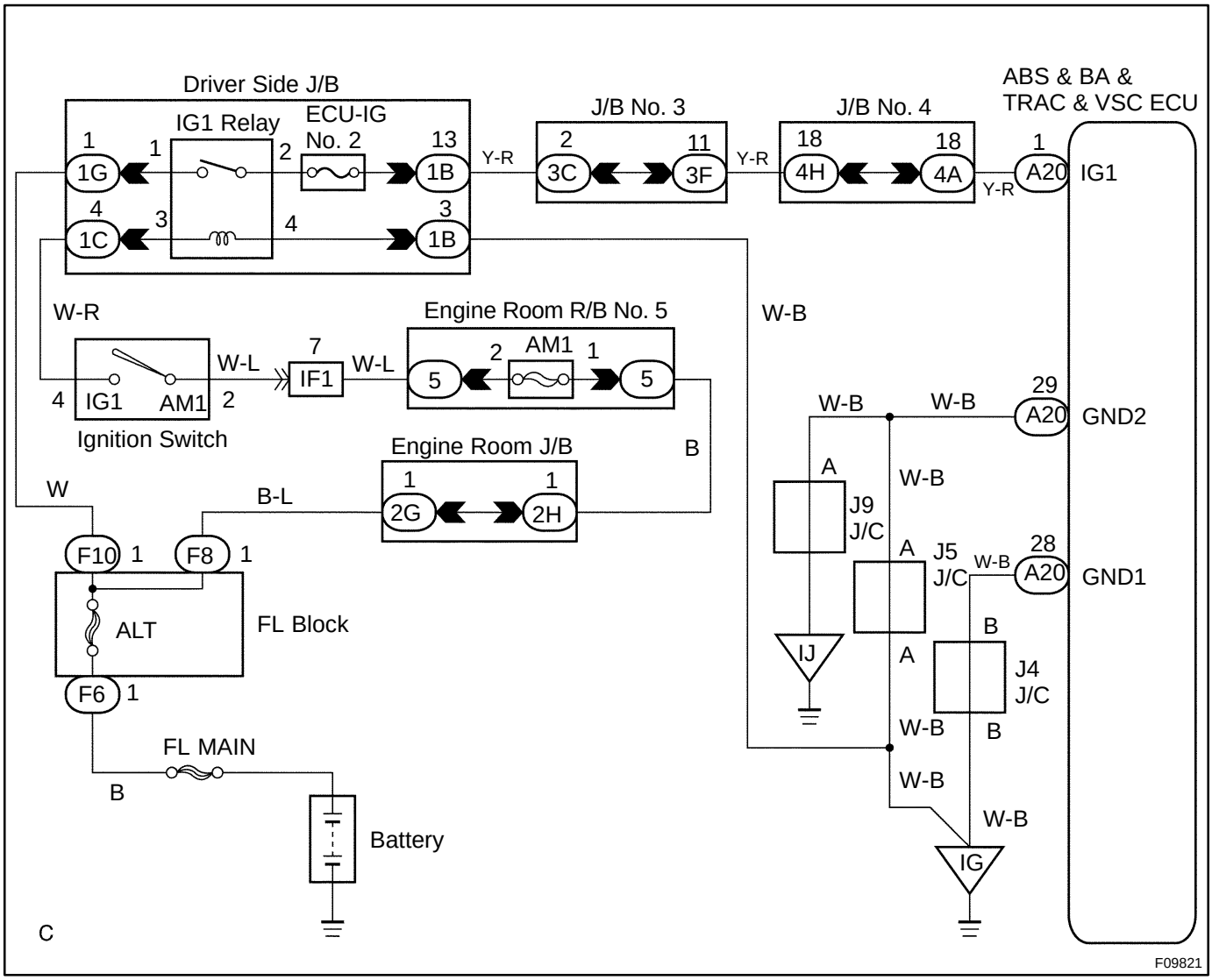

INSPECTION PROCEDURE

1	**Check ECU-IG No. 2 fuse.**

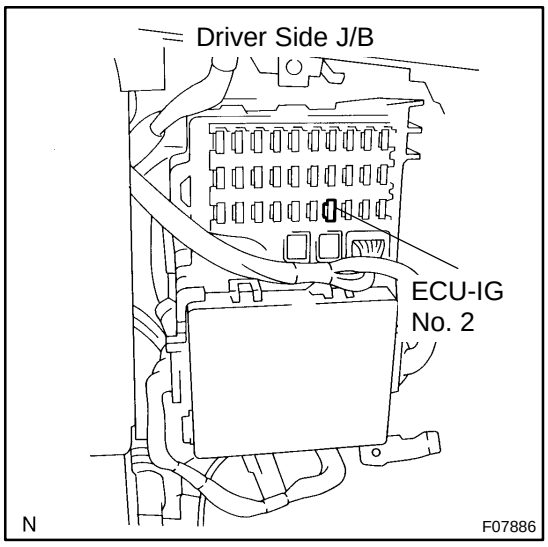

PREPARATION:
Remove the ECU-IG No. 2 fuse from the driver side J/B.
CHECK:
Check continuity of the ECU-IG No. 2 fuse.
OK:
Continuity

NG → **Check for short circuit in all the harness and components connected to ECU-IG No. 2 fuse (See attached wiring diagram).**

OK

2	**Check battery positive voltage.**

OK:
Voltage: 10 - 14 V

NG → **Check and repair the charging system (See page CH-1).**

OK

3	**Check voltage between terminals IG1 (1) and GND (28, 29) of ABS & BA & TRAC & VSC ECU.**

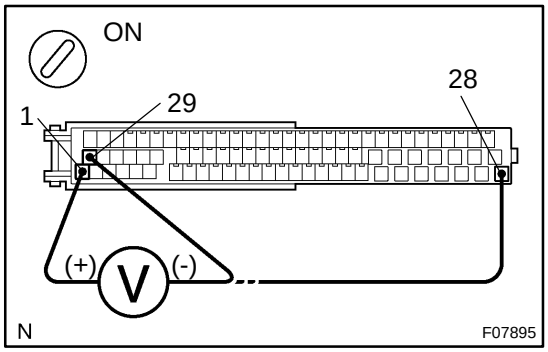

PREPARATION:

Disconnect the connector from the ABS & BA & TRAC & VSC ECU.

CHECK:

(a) Turn the ignition switch ON.

(b) Measure the voltage between terminals 1 and 28, 29 of ABS & BA & TRAC & VSC ECU harness side connector.

OK:

Voltage: 10 - 14 V

OK	**Check and replace ABS & BA & TRAC & VSC ECU.**

NG

4	**Check continuity between terminals GND (28, 29) of ABS & BA & TRAC & VSC ECU and body ground.**

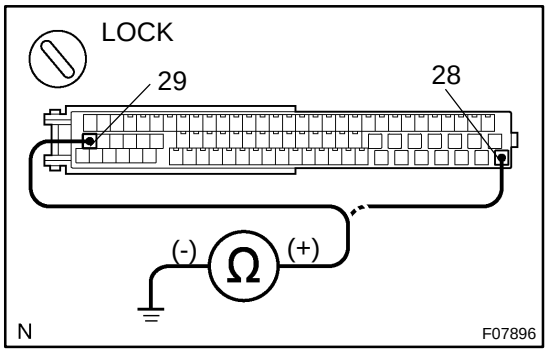

CHECK:

Measure the resistance between terminal 28, 29 of ABS & BA & TRAC & VSC ECU harness side connector and body ground.

OK:

Resistance: 1 Ω or less

NG	**Repair or replace harness or connector.**

OK

Check for open circuit in harness and connector between ABS & BA & TRAC & VSC ECU and ECU-IG fuse (See page IN-30).

DI6O7-02

DTC	C1246 / 53	Master Cylinder Pressure Sensor Circuit

CIRCUIT DESCRIPTION

DTC No.	DTC Detecting Condition	Trouble Area
C1246 / 53	When any of the following 1. through 3. is detected: 1. The voltage of sensor signal is out of range (less than 0.25 V, more than 4.75 V). 2. The sensor supply voltage is out of range (above 5.6 V, below 4.4 V). 3. The sensor signal offset value is out of range.	●Master cylinder pressure sensor ●Master cylinder pressure sensor circuit

WIRING DIAGRAM

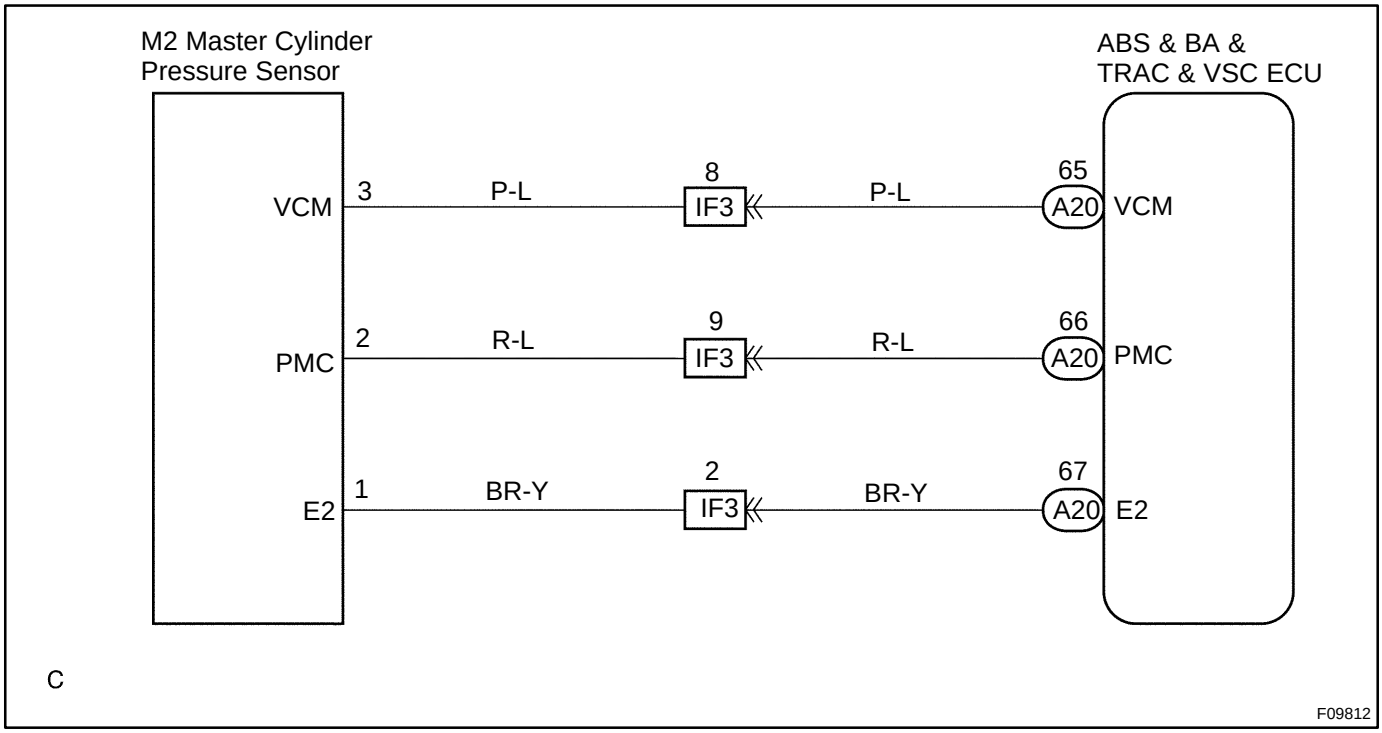

INSPECTION PROCEDURE

HINT:

Start the inspection from step 1, in case of using the TOYOTA hand-held tester and start from step 2, in case of not using the TOYOTA hand-held tester.

1	**Check output value of the master cylinder pressure sensor.**

PREPARATION:

(a) Connect the TOYOTA hand-held tester to the DLC3.
(b) Turn the ignition switch ON and push the TOYOTA hand-held tester main switch ON.
(c) Select the DATALIST mode on the TOYOTA hand-held tester.

CHECK:

Check that the brake fluid pressure value of the master cylinder pressure sensor displayed on the TOYOTA hand-held tester is changing when depressing the brake pedal.

OK:

Brake fluid pressure value must be changing.

OK → **Go to step 4.**

NG

2	**Check master cylinder pressure sensor.**

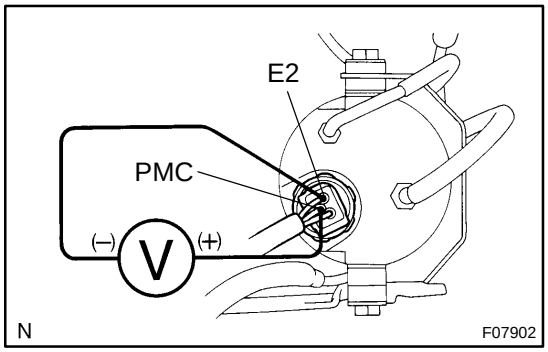

PREPARATION:

Install LSPV gauge to the front caliper bleeder plug portion, and bleed the air from LSPV gauge.

SST 09709-29018

CHECK:

Start the engine and depress the brake pedal, then check the relation between the fluid pressure and voltage of PMC and E2 terminals of the master cylinder pressure sensor with connector still connected.

OK:

Front brake caliper fluid pressure	Voltage
0 kPa (0 Kgf/cm^2, 0 psi)	0.44 - 0.76 V
5,883 kPa (60 kgf/cm^2, 853 psi)	1.34 - 1.66 V
11,768 kPa (120 kgf/cm^2, 1,706 psi)	2.24 - 2.56 V

HINT:

Voltage between terminals VCM and E2: 4.7 - 5.3 V

NG → **Replace master cylinder pressure sensor.**

OK

3	Check for open and short circuit in harness and connector between master cylinder pressure sensor and ABS & BA & TRAC & VSC ECU (See page IN-30).

NG → Repair or replace harness or connector.

OK

4	Check whether or not the ECU terminal STP input voltage is changed when the stop light switch is turned on and off.

NO → Check the stop light switch circuit (See page BE-36).

YES

Check and replace ABS & BA & TRAC & VSC ECU.

DI6O8-03

DTC	C1249 / 58	Stop Light Switch Circuit

CIRCUIT DESCRIPTION

DTC No.	DTC Detecting Condition	Trouble Area
C1249 / 58	After the ignition switch is turned ON, the condition that the STP terminal voltage of ECU is 55 % to 75 % of supplied voltage, continues for 1 sec. or more.	●Stop light switch ●Stop light switch circuit

WIRING DIAGRAM

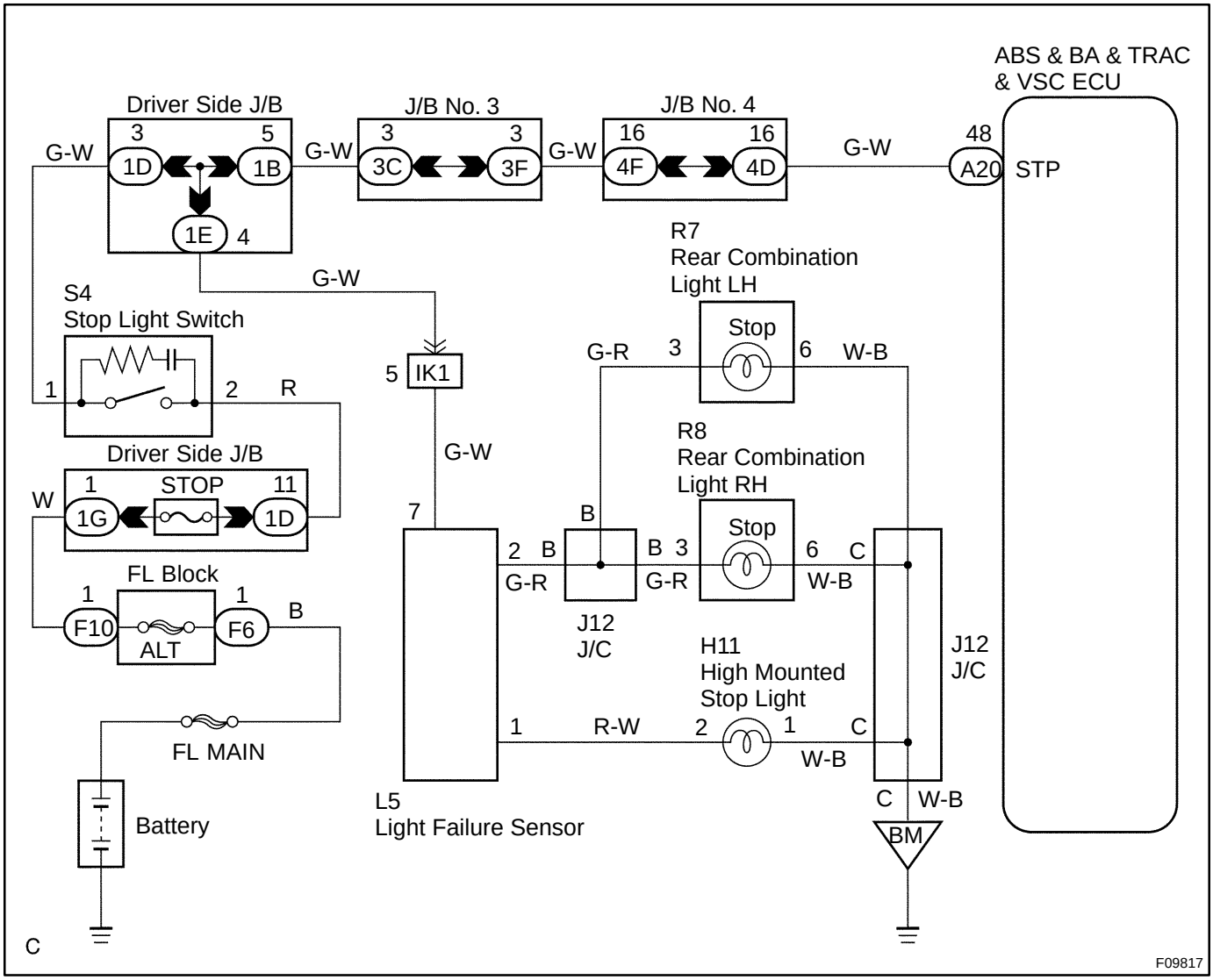

INSPECTION PROCEDURE

1	**Check operation of stop light.**

CHECK:

Check that the stop light lights up when the brake pedal is depressed and turns off when the brake pedal is released.

NG → **Repair stop light circuit (See page BE-36).**

OK

2	**Check voltage between terminal STP (48) of ABS & BA & TRAC & VSC ECU and body ground.**

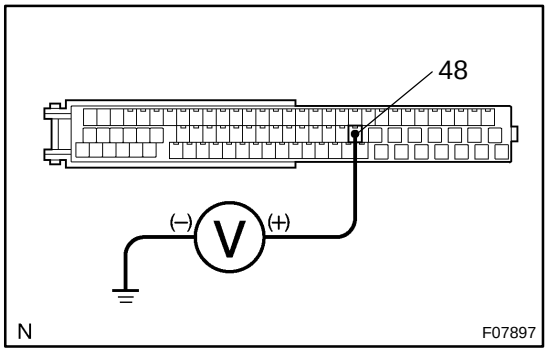

PREPARATION:

Disconnect the connector from the ABS & BA & TRAC & VSC ECU.

CHECK:

Measure the voltage between terminal 48 of ABS & BA & TRAC & VSC ECU harness side connector and body ground when the brake pedal is depressed.

OK:

Voltage: 7.5 - 14 V

OK → **Check and replace ABS & BA & TRAC & VSC ECU.**

NG

3	**Check for open circuit in harness and connector between terminal STP of ABS & BA & TRAC & VSC ECU and stop light switch (See page IN-30).**

NG → **Repair or replace harness or connector.**

OK

Proceed to next circuit inspection shown in problem symptoms table (See page DI-266).

DI6O9-01

DTC	C1300 / 62	ABS & BA & TRAC & VSC ECU Malfunction

CIRCUIT DESCRIPTION

DTC No.	DTC Detecting Condition	Trouble Area
C1300 / 62	ABS & BA & TRAC & VSC ECU internal malfunction is detected.	●ABS & BA & TRAC & VSC ECU

INSPECTION PROCEDURE

1	**Check the DTC for the ABS and VSC (See page DI-252).**

***1** → **Repair ABS and VSC control system according to the code output.**

***2**

Check if ECU is connected to malfunction indicator light.

*1: Output NG code
*2: Malfunction indicator light remains ON

DI6OA-03

DTC	C1350 / 51	Brake Actuator Pump Motor Failure

CIRCUIT DESCRIPTION

DTC No.	DTC Detecting Condition	Trouble Area
C1350 / 51	When any of the following 1. through 3. is detected. 1. No motor voltage supply after actuator of the motor relay. 2. A high level of motor voltage with no actuator of the motor relay. 3. The pump motor voltage is high level for a certain time after the motor relay has elapsed.	●Brake actuator pump motor ●Brake actuator pump motor circuit

WIRING DIAGRAM

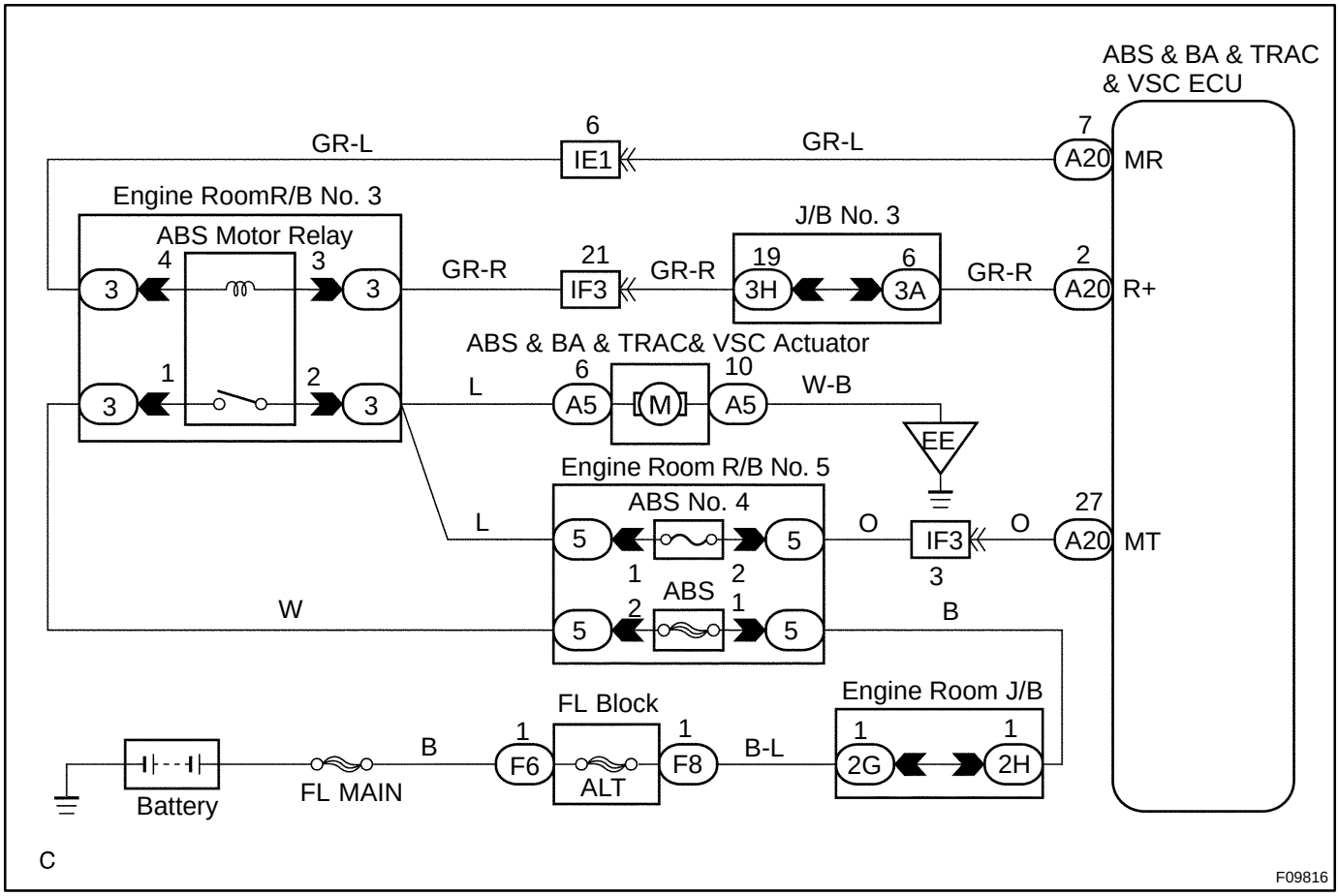

INSPECTION PROCEDURE

1	**Check operation of brake actuator pump motor.**

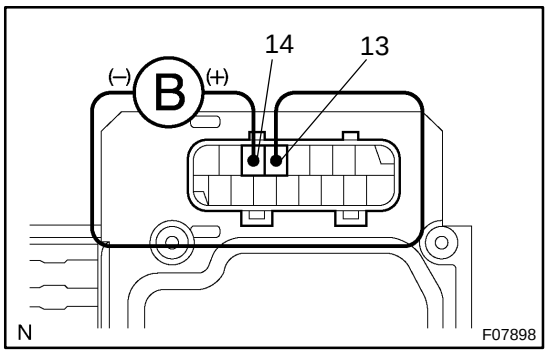

PREPARATION:

Disconnect the connector from the brake actuator.

CHECK:

Connect positive ≦ lead to terminal 14 and negative > lead to terminal 13 of the brake actuator connector, check that the pump motor is operated.

OK:

The running sound of the pump motor should be heard.

OK → **Check for open circuit in harness and connector between ABS motor relay, brake actuator and ECU (See page IN-30).**

NG

Replace brake actuator.

DI6OB-02

DTC	C1351 / 52	Precharge Pump Motor Circuit

CIRCUIT DESCRIPTION

DTC No.	DTC Detecting Condition	Trouble Area
C1351 / 52	When any of the following 1. or 2. is detected: 1. After the ignition switch is turned ON, an open or short circuit continues for 0.06 sec. or more. 2. The precharge pump motor voltage is out of range when precharge pump if off.	●Precharge pump motor ●Precharge pump motor circuit

WIRING DIAGRAM

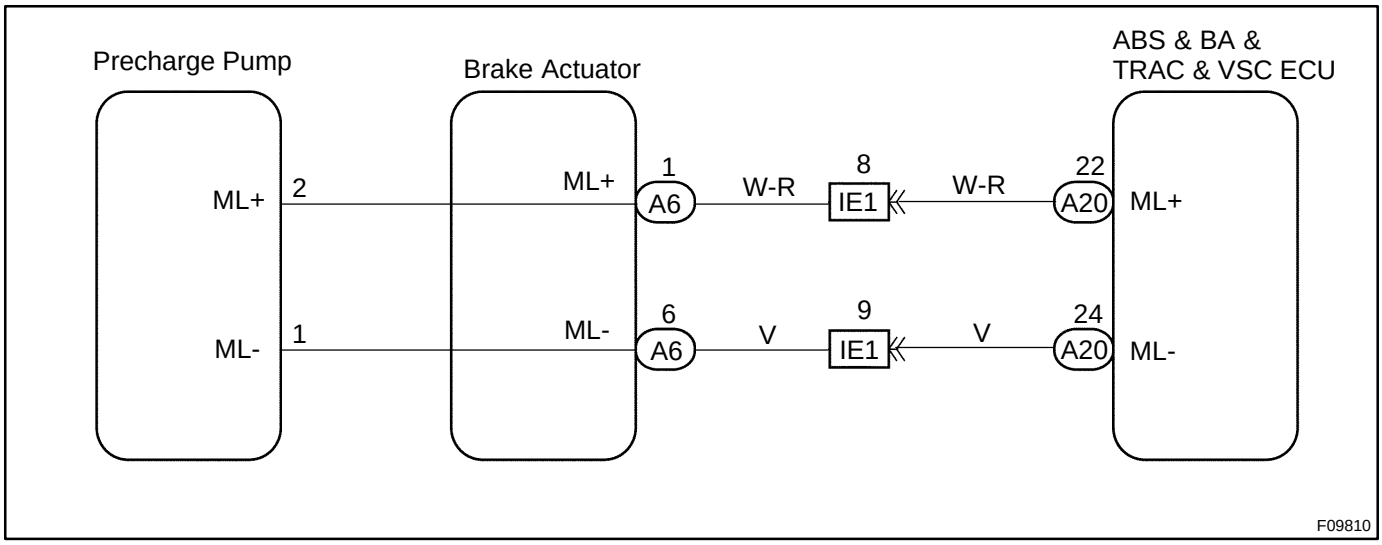

INSPECTION PROCEDURE

HINT:

Start the inspection from step 1 in case of using the TOYOTA hand-held tester and start from step 2 in case of not using TOYOTA hand-held tester.

1	**Check precharge pump motor operation.**

PREPARATION:

(a) Connect the TOYOTA hand-held tester to the DLC3.
(b) Turn the ignition switch ON and push the TOYOTA hand-held tester main switch ON.
(c) Select the ACTIVE TEST mode on the TOYOTA hand-held tester.

CHECK:

Check the operation sound of the precharge pump motor when operating it with the TOYOTA hand-held tester.

OK:

The operation sound of the precharge pump motor should be heard.

NG → **Go to step 3.**

OK

If the same code is still output after the DTC is deleted, check the contact condition of each connection. If the connections are normal, the ECU may be defective.

2	**Check precharge pump motor operation.**

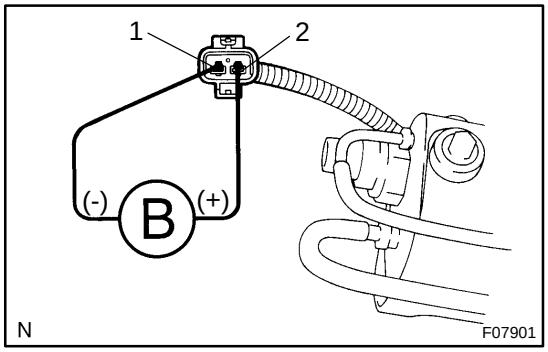

PREPARATION:

Disconnect the connector from the precharge pump motor.

CHECK:

Connect ML+ (2) terminal to the battery positive (+) and ML- (1) terminal to the battery negative (-).

OK:

The operation sound of the pump motor should be heard.

NG → **Check and replace precharge pump.**

OK

3	**Check for open and short circuit in harness and connector between precharge pump and ABS & BA & TRAC & VSC ECU (See page IN-30).**

NG → **Repair or replace harness and connector.**

OK

Check and replace ABS & BA & TRAC & VSC ECU.

DI6OC-03

DTC	42	ECU Communication System Malfunction

CIRCUIT DESCRIPTION

The circuit is used to send TRAC & VSC control information from ABS & BA & TRAC & VSC ECU to the translate ECU (VSC+, VSC-), engine control information and steering angle information from translate ECU to ABS & BA & TRAC & VSC ECU

DTC No.	DTC Detecting Condition	Trouble Area
42	IG1 voltage is 9.5 V or more, and the condition that data from ECU can not be received continues for 5 sec. or more.	●VSC+ or VSC- circuit ●Translate ECU ●ABS & BA & TRAC & VSC ECU

WIRING DIAGRAM

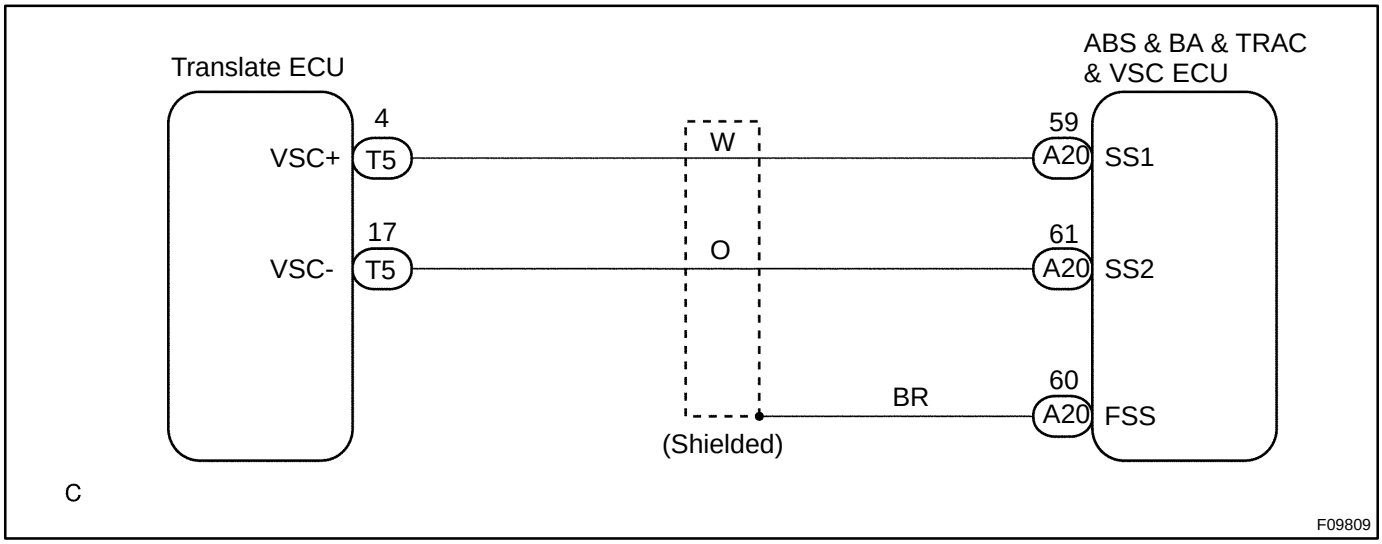

INSPECTION PROCEDURE

1	**Check DTC of translate ECU.**

Check DTC on page DI-252 **.**

*1 → **Repair circuit indicated by the output code.**

*2

2	**Check transrate ECU communication.**

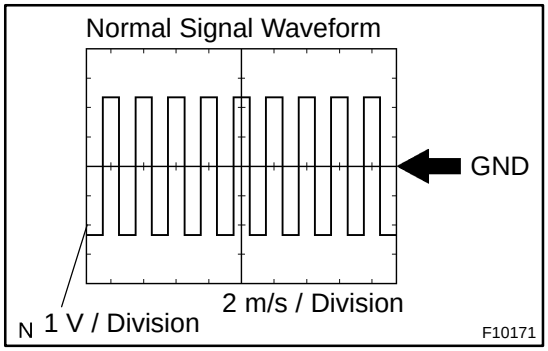

REFERENCE: INSPECTION USING OSCILLOSCOPE

PREPARATION:

(a) Remove the translate ECU.

(b) Connect the oscilloscope to the terminal VSC+ (4) and GND (14) of the translate ECU harness side connector.

CHECK:

Start the engine, and check the signal waveform.

OK → **Check and replace ABS & BA & TRAC & VSC ECU.**

NG

3	**Check for open and short circuit in harness and connector between each of terminals VSC+ and VSC- of translate ECU and ABS & BA & TRAC & VSC ECU (See page IN-30).**

NG → **Repair or replace harness or connector.**

OK

Check and replace ABS & BA & TRAC & VSC ECU.

*1: Output NG code

*2: Output nomal code

DI6OD-03

DTC	44	NEO Signal Circuit

CIRCUIT DESCRIPTION

The ABS & BA & TRAC & VSC ECU receives engine revolution speed signals (NEO signal) from the ECM.

DTC No.	DTC Detecting Condition	Trouble Area
44	When either of the following 1. or 2. is detected: 1. The vehicle speed is 30 km/h (19 mph) or more, and open or short condition of the engine revolution signal under the normal communication condition with ECU continues for 10 secs. or more. 2. While cancel of cruise control is instructed from VSC ECU, open or short condition of the engine revolution signal continues for 0.24 sec. or more.	●NEO circuit ●ECM ●Translate ECU

WIRING DIAGRAM

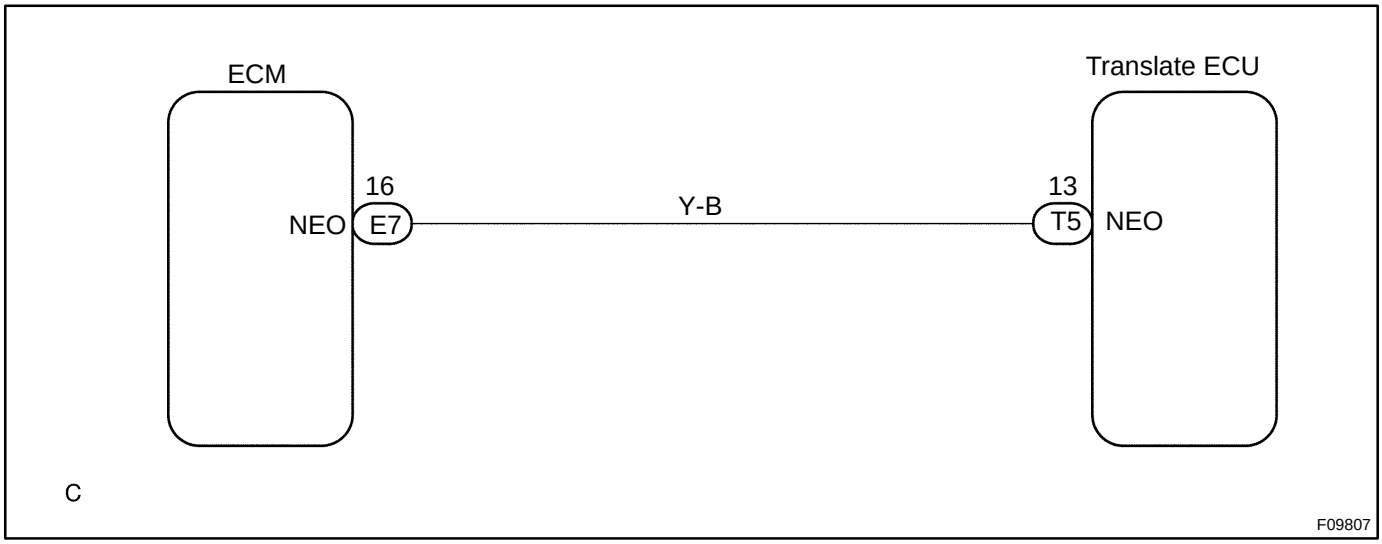

INSPECTION PROCEDURE

1	**Check for open and short circuit in harness and connector between terminal NEO of translate ECU and terminal NEO of ECM (See page IN-30).**

NG → **Repair or replace harness and connector.**

OK

2	**Check voltage between terminal NEO (13) of translate ECU and body ground.**

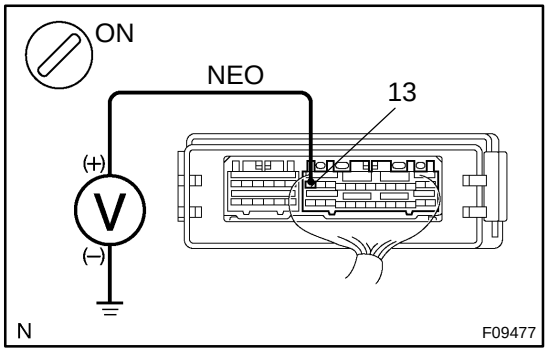

PREPARATION:

Remove the translate ECU with connectors still connected.

CHECK:

(a) Turn the ignition switch ON.

(b) Measure the voltage between terminal 13 of the translate ECU and body ground under the engine conditions below.

OK:

Engine condition	Voltage
OFF (IG ON)	3 - 6 V or below 1 V
ON (Idling)	3 - 6 V ↔ below 1 V (Pulse)

(Reference)

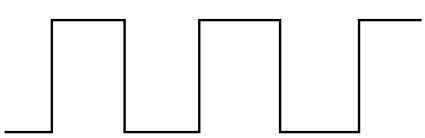

NG → **Check and replace ECM.**

OK

Check and replace transrate ECU.

If the same code is still output after the DTC is deleted, check the contact condition of each connection.

DI6OE-03

DTC	53	ECM Communication Circuit Malfunction

CIRCUIT DESCRIPTION

The circuit is used to send TRAC & VSC control information from the translate ECU to the ECM (TRC+, TRC-), and engine control information from the ECM to the translate ECU (ENG+, ENG-).

DTC No.	DTC Detecting Condition	Trouble Area
53	When any of the following 1. through 3. is detected : 1. IG1 voltage is 8.5 V or more, and the condition that data can not be sent to ECM continues for 5 sec. or more. 2. IG1 voltage is 8.5 V or more, engine speed is 500 r.p.m or more, and the condition that data can not be received from ECM continues for 5 sec. or more. 3. The condition that data can not be transmitted between the translate ECU and ECM occurs at least once within 5 sec. continues 10 consecutive times.	●TRC+ or TRC- circuit ●ENG+ or ENG- circuit ●ECM ●Translate ECU

WIRING DIAGRAM

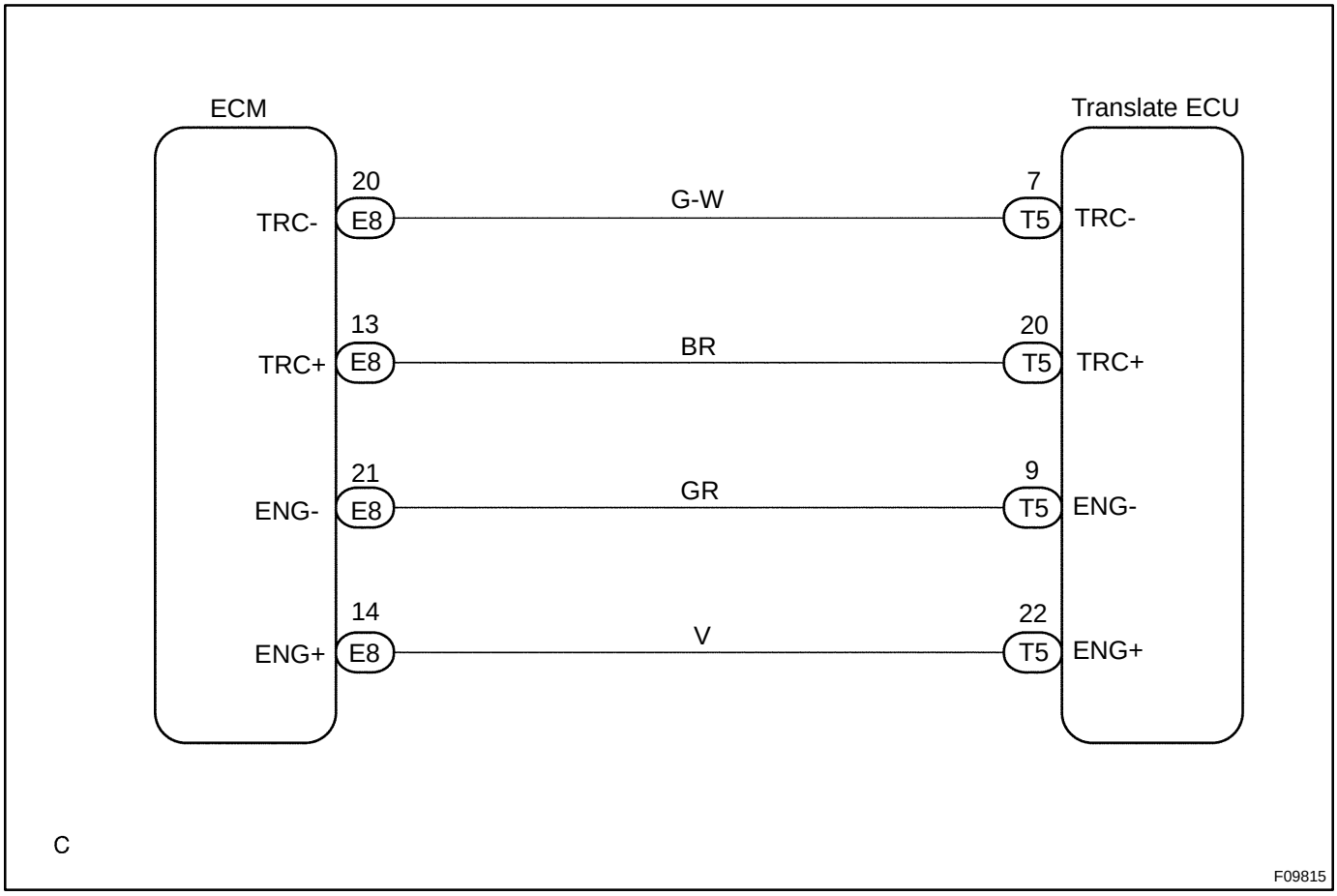

INSPECTION PROCEDURE

1	**Check translate ECU communication.**

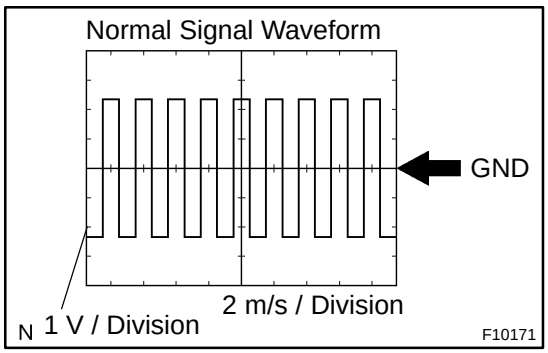

REFERENCE: INSPECTION USING OSCILLOSCOPE

PREPARATION:

(a) Remove the translate ECU.

(b) Connect the oscilloscope to each of the terminals ENG+ or TRC+ and GND of the translate ECU harness side connector.

CHECK:

Start the engine, and check the signal waveform.

OK	**Check and replace translate ECU.**

NG

2	**Check for open and short circuit in harness and connector between each of terminals ENG+, ENG-, TRC+ and TRC- of translate ECU and ECM (See page IN-30).**

NG	**Repair or replace harness or connector.**

OK

Check and replace ECM.

DI6OQ-01

Check for Fluid Leakage

Check for fluid leakage from actuator or hydraulic lines.

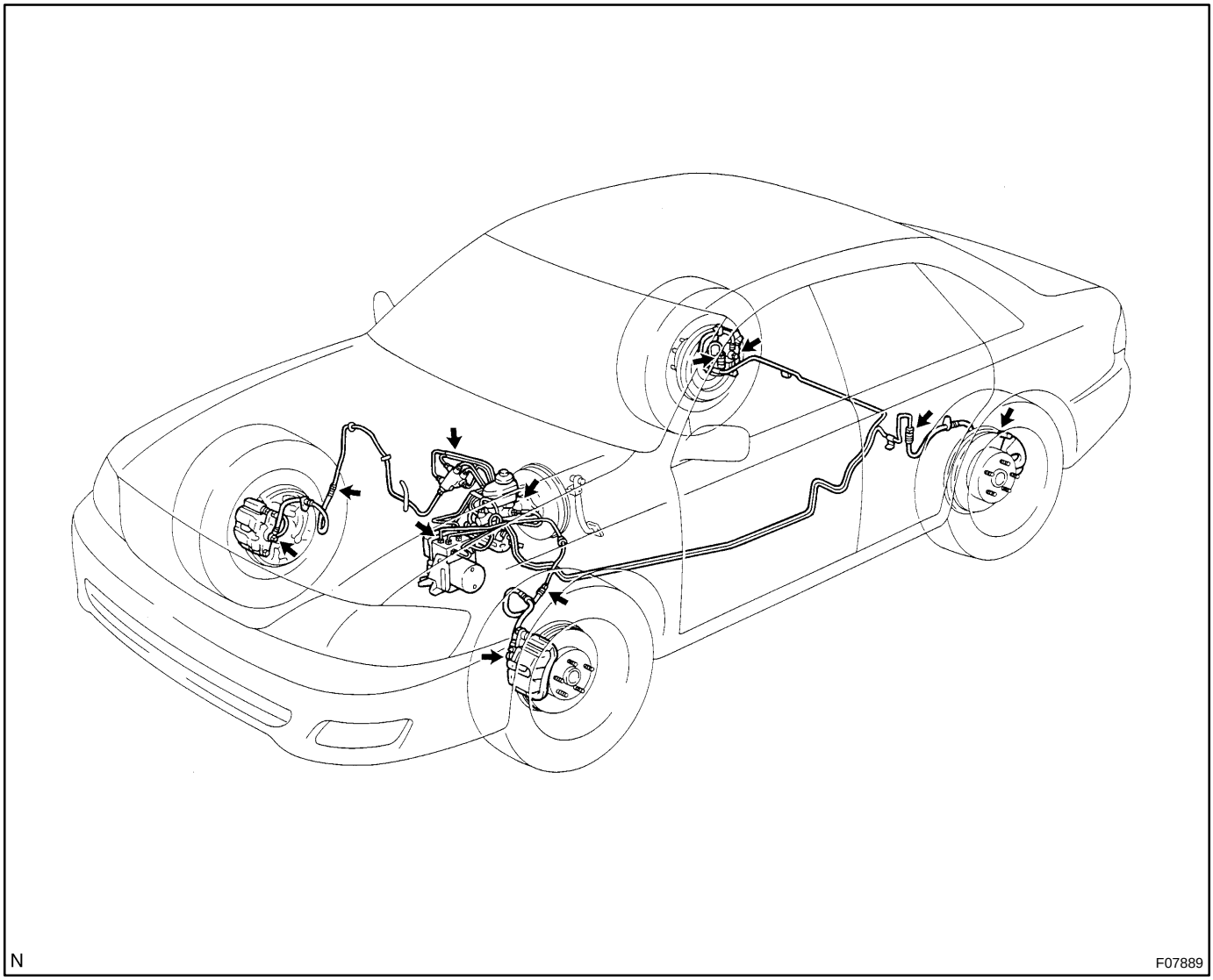

N

F07889

DI6OF-04

DTC	Non Code	Translate ECU Malfunction

CIRCUIT DESCRIPTION

DTC No.	DTC Detecting Condition	Trouble Area
Non Code	Translate ECU internal malfunction is detected.	●Tc terminal circuit ●Brake warning light circuit ●Translate ECU

INSPECTION PROCEDURE

1	**Check the BRAKE warning light circuit (See page DI-330).**

NG → **Repair or replace the BRAKE warning light circuit.**

OK

2	**Check the Tc terminal circuit (See page DI-342).**

NG → **Repair or replace the Tc terminal circuit.**

OK

Check and replace Translate ECU.

DI6OF-03

DTC	Normal Code	Malfunction in ECM

CIRCUIT DESCRIPTION

If any trouble occurs in the ECM control system, the ECU prohibits ABS & VSC control.

DTC No.	DTC Detecting Condition	Trouble Area
Normal Code	Conditions 1., 2,. 3, or 4,continue for 5 sec. or more: 1. Engine malfunction signal is sent from ECM. 2. Shift malfunction signal is sent from ECM 3. The shift position is other than P and N range input voltage is 8 V or more. 4. The shift position is PN or rev and D range input voltage is 8 V or more.	●ECM circuit ●ECM ●Brake fluid level ●Brake fluid level warning switch circuit ●Steering angle sensor ●ABS & BA & TRAC & VSC ECU

INSPECTION PROCEDURE

1	Is DTC out put for ECM?

Check DTC on page DI-3 .

YES → **Repair engine control system according to the output code.**

NO

2	Check the DTC for the ABS and VSC (See page DI-252).

*1 → **Repair ABS and VSC control system according to the code output.**

*2

Check and replace translate ECU.

*1: Output NG code except for DTC of VSC system C1301/42
*2: Output NG code DTC of VSC system C1301/42 only

DI6OL-03

SLIP Indicator Light Circuit

CIRCUIT DESCRIPTION

The SLIP indicator light blinks during TRAC & VSC operation.

WIRING DIAGRAM

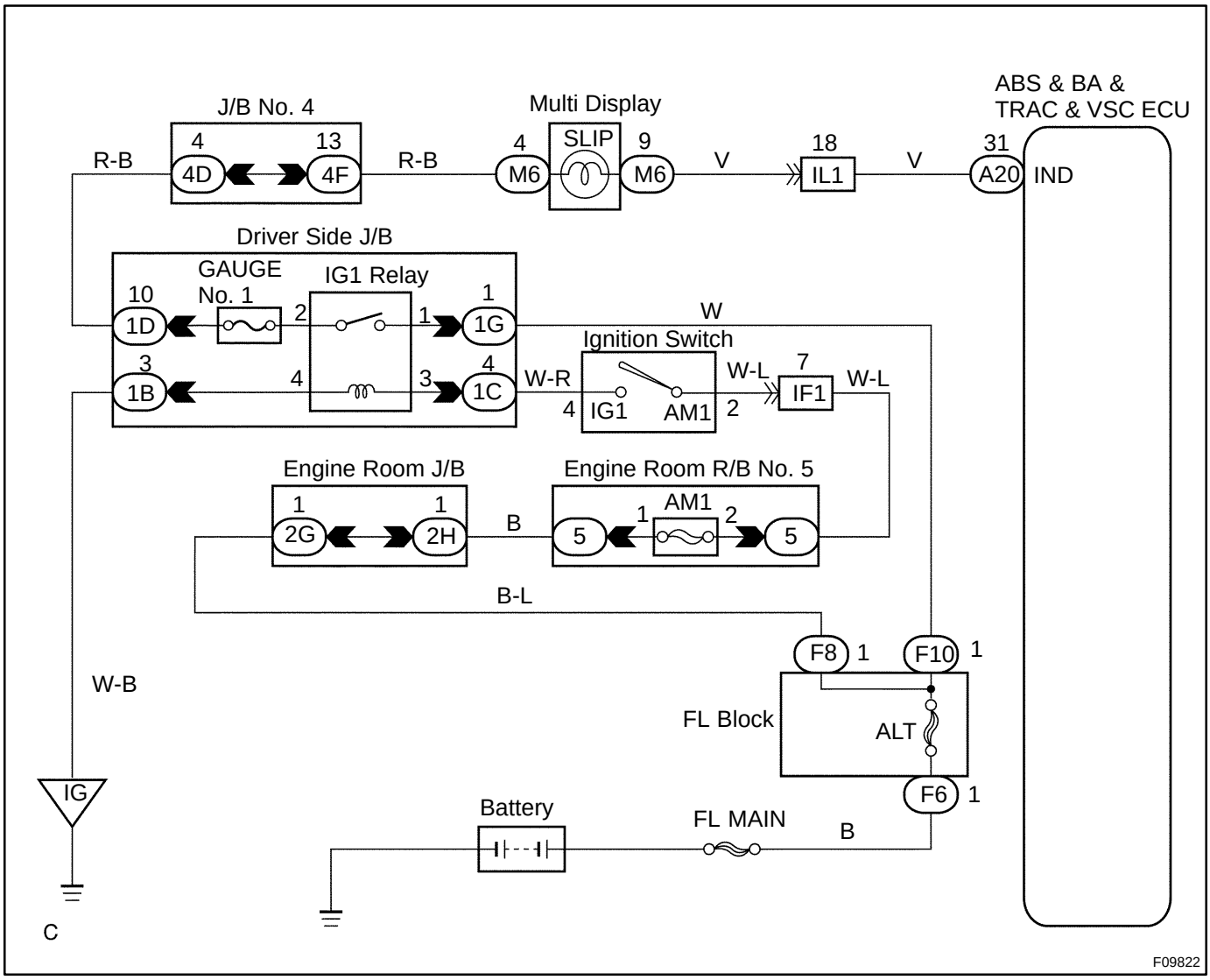

INSPECTION PROCEDURE

HINT:

Start the inspection from step 1, in case of using the TOYOTA hand-held tester and start from step 2, in case of not using the TOYOTA hand-held tester.

1	**Check operation of the SLIP indicator light.**

PREPARATION:

(a) Connect the TOYOTA hand-held tester to the DLC3.
(b) Turn the ignition switch ON and push the TOYOTA hand-held tester main switch ON.
(c) Select the ACTIVE TEST mode on the TOYOTA hand-held tester.

CHECK:

Check that "ON" and "OFF" of the SLIP indicator light can be shown on the combination meter with the TOYOTA hand-held tester.

OK → **Go to step 4.**

NG

2	**Check that the SLIP indicator light is ON for 3 seconds immediately after ignition switch is turned ON.**

OK → **Check and replace ABS & BA & TRAC & VSC ECU.**

NG

3	**Check SLIP indicator light.**

See combination meter troubleshooting on page BE-2 .

NG → **Repair or replace combination meter. Check and replace ABS & BA & TRAC & VSC ECU.**

OK

4	**Check for open and short circuit in harness and connector between ABS & BA TRAC & VSC ECU and SLIP indicator light (See page IN-30).**

NG → **Repair or replace harness or connector.**

OK

Check and replace ABS & BA & TRAC & VSC ECU.

DI6OO-01

Tc Terminal Circuit

CIRCUIT DESCRIPTION

Connecting between terminals Tc and E_1 of the DLC1 or the DLC2 causes the ECU to display DTC by blinking the ABS warning light, VSC warning light and BRAKE warning light.

WIRING DIAGRAM

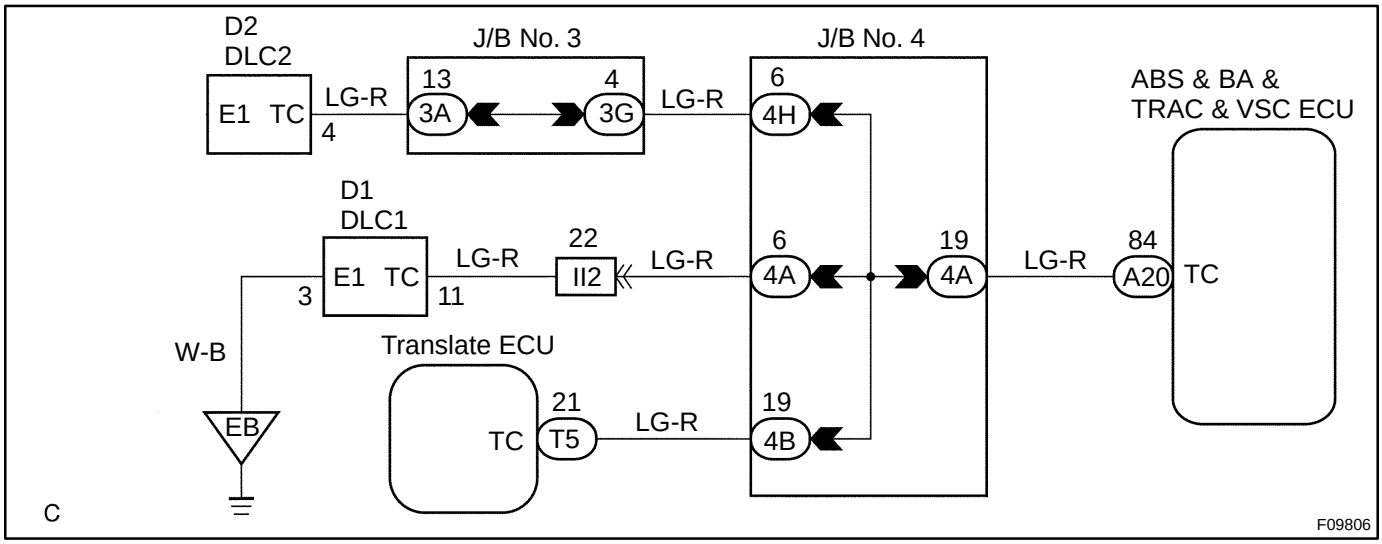

INSPECTION PROCEDURE

1	**Check voltage between terminals Tc and E_1.**

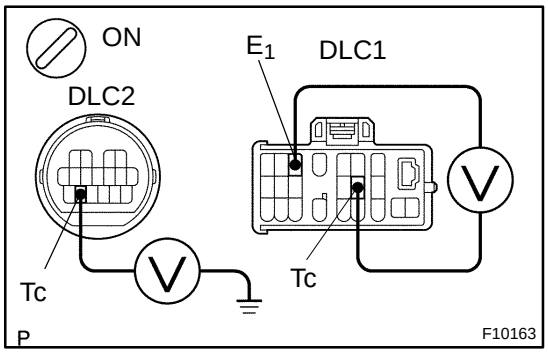

CHECK:

(a) Turn the ignition switch ON.

(b) Measure the voltage between terminals Tc and E_1 of or DLC1 or terminal Tc of DLC2 and body ground.

OK:

Voltage: 10 - 14 V

OK	**If each warning light does not blink even after Tc and E_1 are connected, the ECU may be defective.**

NG

2	**Check for open and short circuit in harness and connector between ABS & BA & TRAC & VSC ECU and DLC2 or DLC1, DLC2 or DLC1 and body ground (See page IN-30).**

NG → **Repair or replace harness or connector.**

OK

Check and replace ABS & BA & TRAC & VSC ECU.

Ts Terminal Circuit

CIRCUIT DESCRIPTION

The sensor check circuit detects abnormality in the speed sensor signal which cannot be detected with the DTC check.

Connecting terminals Ts and E_1 of the DLC1 starts the check.

WIRING DIAGRAM

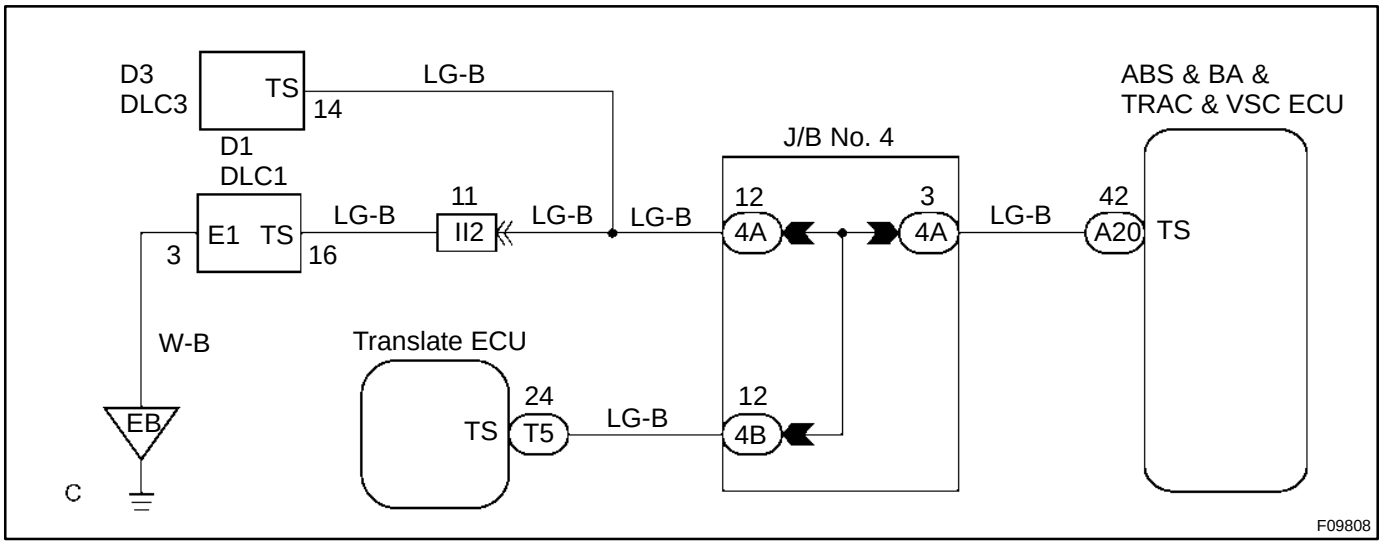

INSPECTION PROCEDURE

1	**Check voltage between terminals Ts and E_1 of DLC1.**

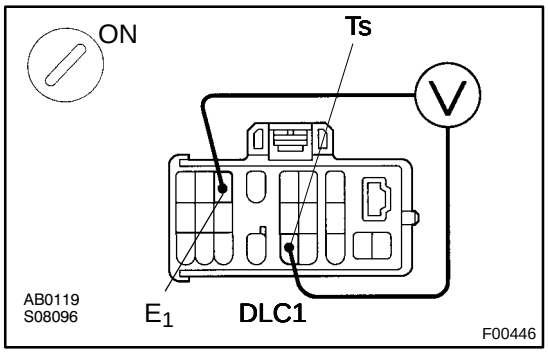

CHECK:

(a) Turn the ignition switch ON.

(b) Measure the voltage between terminals Ts and E_1 of DLC1.

OK:

Voltage: 10 - 14 V

OK → **If ABS warning light does not blink even after Ts and E_1 are connected, the ECU may be defective.**

NG

2	**Check for open and short circuit in harness and connector between ABS & BA & TRAC & VSC ECU and DLC1, DLC1 and body ground (See page IN-30).**

NG → **Repair or replace harness or connector.**

OK

Check and replace ABS & BA & TRAC & VSC ECU.

DI6ON-03

VSC Buzzer Circuit

CIRCUIT DESCRIPTION

The VSC buzzer sounds during VSC operation.

WIRING DIAGRAM

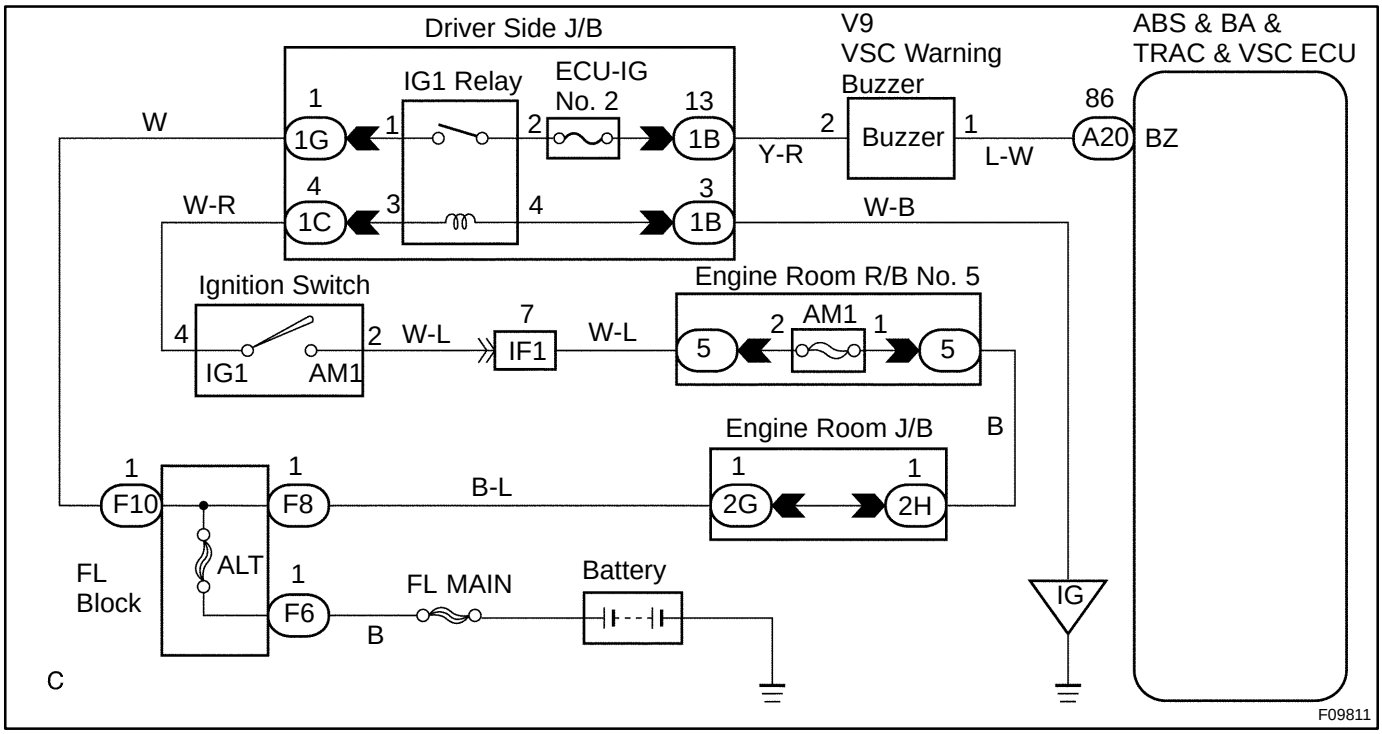

INSPECTION PROCEDURE

HINT:

Start the inspection from step 1 in case of using the TOYOTA hand-held tester and start from step 3 in case of not using the TOYOTA hand-held tester.

1	**Check operation of the VSC buzzer.**

PREPARATION:

(a) Connect the TOYOTA hand-held tester to the DLC3.
(b) Turn the ignition switch ON and push the TOYOTA hand-held tester main switch ON.
(c) Select the ACTIVE TEST mode on the TOYOTA hand-held tester.

CHECK:

Check "ON-OFF" function of the VSC buzzer with the TOYOTA hand-held tester.

OK → **Check and replace ABS & BA & TRAC & VSC ECU.**

NG

2	**Check voltage between terminal 1 of VSC buzzer and body ground.**

PREPARATION:
Disconnect the connector from VSC buzzer.
CHECK:
(a) Turn the ignition switch ON.
(b) Measure voltage between terminal (1) of VSC buzzer and body ground.
OK:
Voltage: 10 - 14 V

NG → **Repair or replace harness or connector from voltage supply to VSC buzzer.**

OK

3	**Check VSC buzzer.**

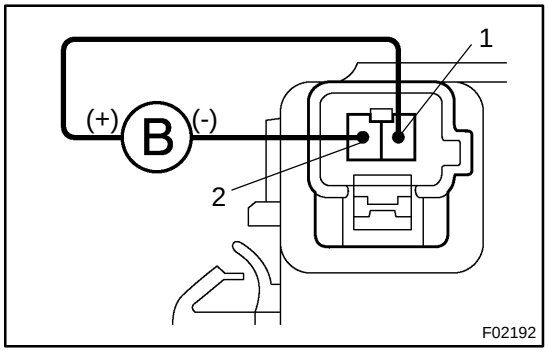

PREPARATION:
Disconnect the VSC buzzer connector.
CHECK:
Apply battery positive voltage to the terminals 1 and 2 of VSC buzzer connector, and check that the VSC buzzer sounds.

NG → **Replace VSC buzzer.**

OK

4	**Check for open and short circuit in harness and connector between ABS & BA & TRAC & VSC ECU and VSC buzzer (See page IN-30).**

NG → **Repair or replace harness or connector.**

OK

Check and replace ABS & BA & TRAC & VSC ECU.

VSC OFF Indicator Light, VSC OFF Switch Circuit

CIRCUIT DESCRIPTION

This is the TRAC & VSC control main switch. When the VSC OFF switch is pressed, TRAC & VSC control is deactivated and the VSC OFF indicator light lights up. By turning off the ignition switch, TRAC & VSC control is surely activated when the ignition switch turns ON next time. Also, the VSC OFF indicator light truns ”ON” when the ECU prohibit TRAC & VSC controls.

WIRING DIAGRAM

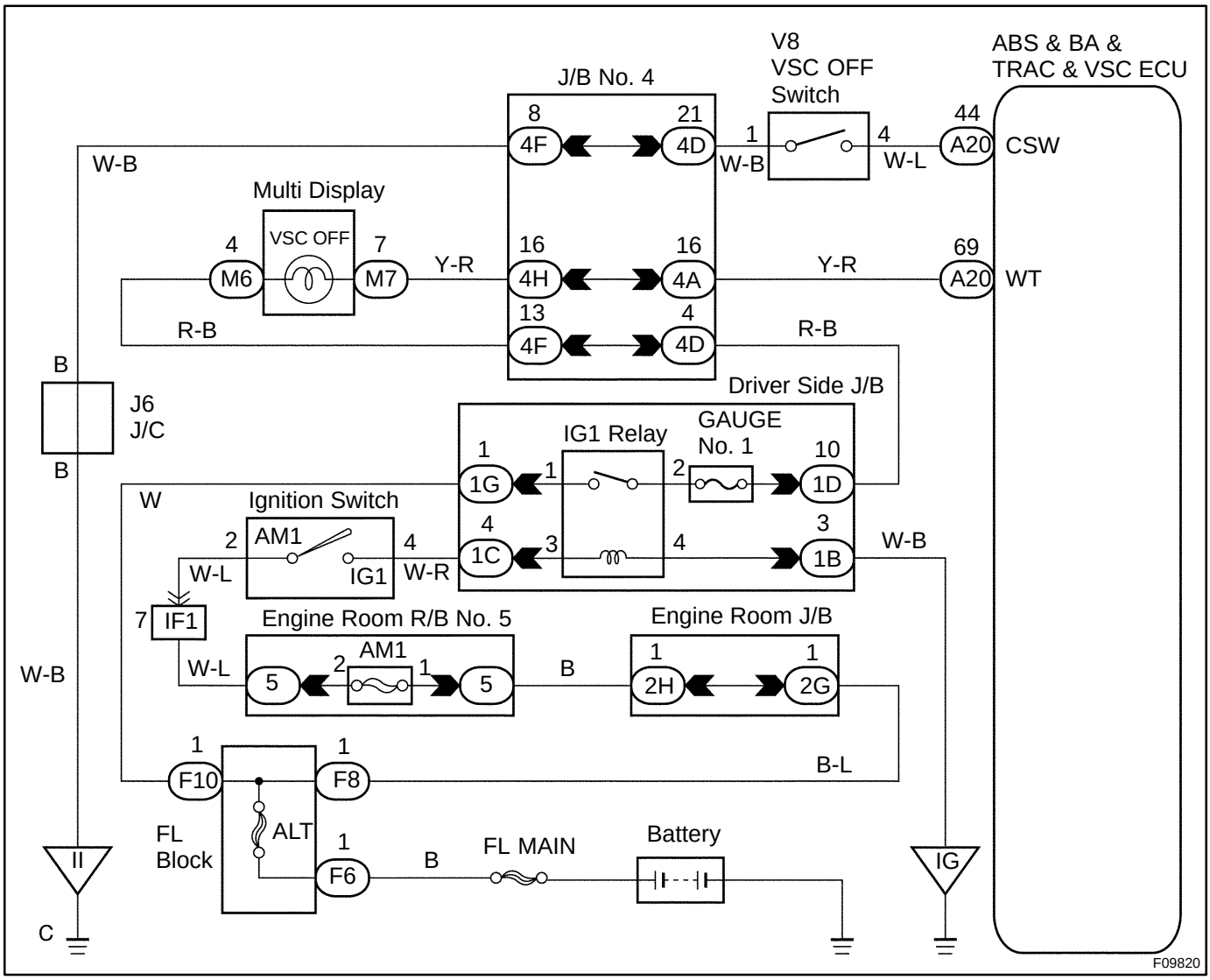

INSPECTION PROCEDURE

HINT:

Start the inspection from step 1 in case of using the TOYOTA hand-held tester and start from step 2 in case of not using the TOYOTA hand-held tester.

1	**Check operation of the VSC OFF indicator light.**

PREPARATION:

(a) Connect the TOYOTA hand-held tester to the DLC3.
(b) Turn the ignition switch ON and push the TOYOTA hand-held tester main switch ON.
(c) Select the ACTIVE TEST mode on the TOYOTA hand-held tester.

CHECK:

Check that "ON" and "OFF" of the VSC OFF indicator light can be shown on the combination meter with the TOYOTA hand-held tester.

NG → **Go to step 4.**

OK

2	**Check VSC OFF switch.**

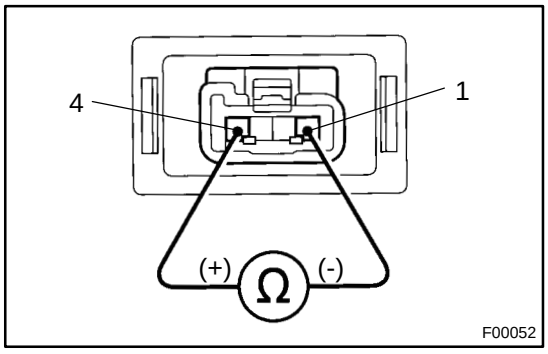

PREPARATION:

(a) Remove the VSC OFF switch.
(b) Disconnect the VSC OFF switch connector.

CHECK:

Measure the resistance between terminals 1 and 4 of the VSC OFF switch when the VSC OFF switch is ON and OFF.

OK:

VSC OFF switch	Resistance
Pressed	Continuity
Released	1MΩ or higher

NG → **Replace VSC OFF switch.**

OK

3	**Check for open and short circuit in harness and connector between terminal CSW of ABS & BA & TRAC & VSC ECU and VSC OFF switch and body ground (See page IN-30).**

NG → **Repair or replace harness or connector.**

OK

4	**Check VSC OFF indicator light.**

See combination meter troubleshooting on page BE-2 .

NG → **Repair or replace combination meter.**

OK

5	**Check for open and short circuit in harness and connector between terminal WT of ABS & BA & TRAC & VSC ECU and VSC OFF indicator light (See page IN-30).**

NG → **Repair or replace harness or connector.**

OK

Check and replace ABS & BA & TRAC & VSC ECU.

DI6OJ-03

VSC Warning Light Circuit

CIRCUIT DESCRIPTION

If the ECU stores DTC to be necessary to shut down VSC operation, the VSC warning light lights on the combination meter.

WIRING DIAGRAM

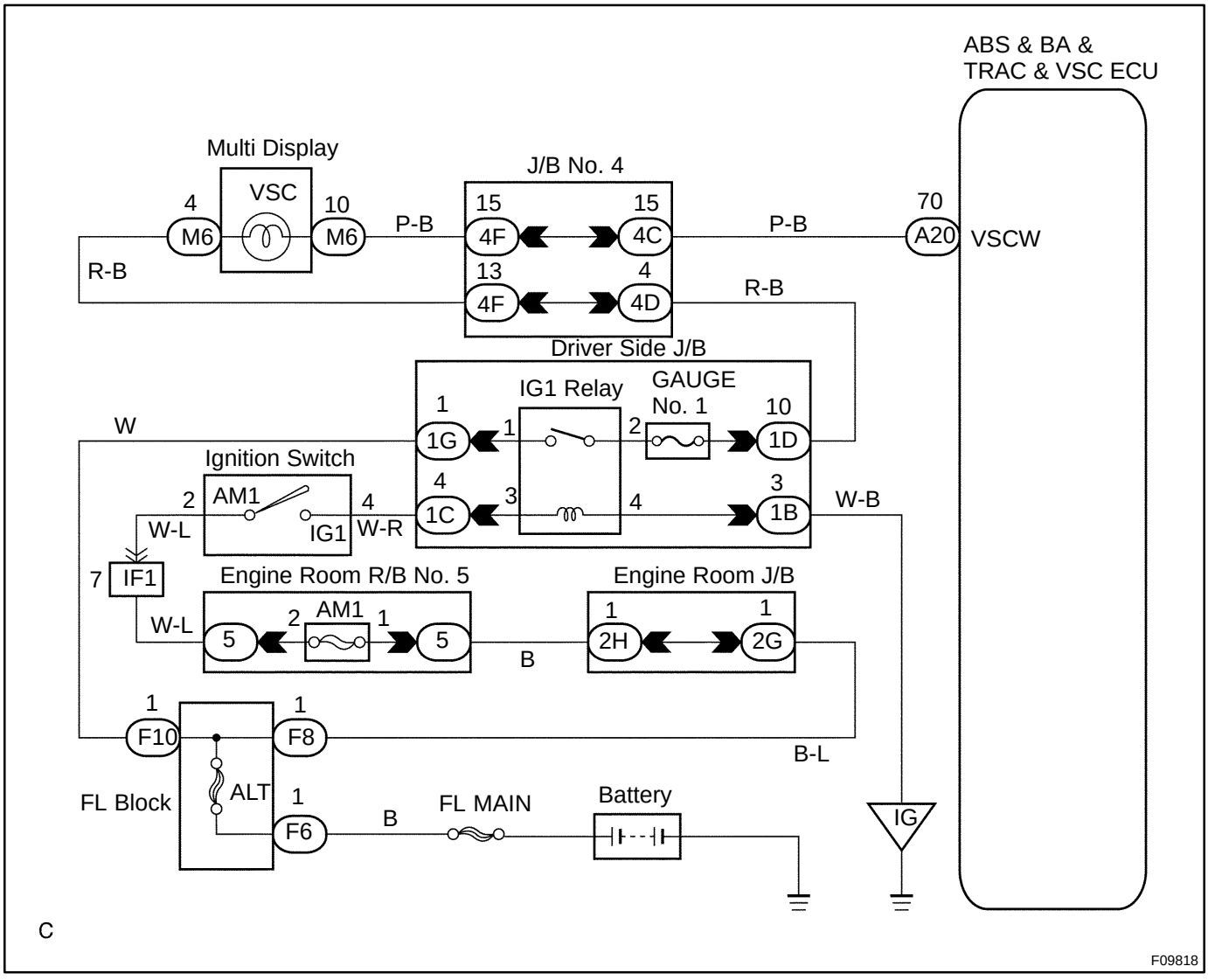

INSPECTION PROCEDURE

HINT:

Start the inspection from step 1 in case of using the TOYOTA hand-held tester and start from step 2 in case of not using the TOYOTA hand-held tester.

1	**Check operation of the VSC warning light.**

PREPARATION:

(a) Connect the TOYOTA hand-held tester to the DLC3.
(b) Turn the ignition switch ON and push the TOYOTA hand-held tester main switch ON.
(c) Select the ACTIVE TEST mode on the TOYOTA hand-held tester.

CHECK:

Check that "ON" and "OFF" of the VSC warning light can be shown on the combination meter with the TOYOTA hand-held tester.

OK → **Check and replace ABS & BA & TRAC & VSC ECU.**

NG

2	**Is DTC output?**

YES → **Repair circuit indicated by the output code.**

NO

3	**Check for open and short circuit in harness and connector between ABS & BA & TRAC & VSC ECU and VSC warning light (See page IN-30).**

NG → **Repair or replace harness or connector.**

OK

4	**Check VSC warning light.**

See the combination meter troubleshooting on page BE-2 .

NG → **Repair or replace combination meter.**

OK

Check and replace ABS & BA & TRAC & VSC ECU.

DI6NR-01

CUSTOMER PROBLEM ANALYSIS CHECK

ABS & BA & VSC Check Sheet

Inspector's Name :

Customer's Name		**Registration No.**	
		Registration Data	/ /
		Frame No.	
Date Vehicle Brought In	/ /	**Odometer Reading**	km miles

Date Problem First Occurred	/ /
Frequency Problem Occurs	☐ Continuous ☐ Intermittent (times a day)

Symptoms	☐ ABS does not operate.	
	☐ ABS does not operate efficiently.	
	☐ TRAC does not operate.	
	☐ VSC does not operate. (Wheels spin when starting rapidly.)	
	☐ BA does not operate.	
	ABS Warning Light Abnormal	☐ Remains ON ☐ Does not Light Up
	VSC OFF Indicator Light Abnormal	☐ Remains ON ☐ Does not Light Up
	VSC Warning Light Abnormal	☐ Remains ON ☐ Does not Light Up
	SLIP Indicator Light Abnormal	☐ Remains ON ☐ Does not Light Up
	BRAKE Warning Light Abnormal	☐ Remains ON ☐ Does not Light Up

Check Item	**Malfunction Indicator Light**	☐ Normal ☐ Does not Light Up

DTC Check	**1st Time**	☐ Normal Code ☐ Malfunction Code (Code)
	2nd Time	☐ Normal Code ☐ Malfunction Code (Code)

DI6NT-03

DIAGNOSTIC TROUBLE CODE CHART

NOTICE:

- **When removing the part, turn the ignition switch OFF.**
- **When replacing the steering angle sensor or ECU, make sure to perform steering angle sensor zero point calibration.**

HINT:

- Using SST 09843-18020, connect the terminals Tc and E_1.
- If any abnormality is not found when inspecting parts, inspect the ECU.
- If a malfunction code is displayed during the DTC check, check the circuit corresponding the code. For details of each code, refer to the page under respective "DTC No." in the DTC chart.

DTC chart of ABS system:

DTC No. (See Page)	Detection Item	Trouble Area
C0278 / 11 (DI-280)	Open or short circuit in ABS solenoid relay circuit	●ABS solenoid relay ●ABS solenoid relay circuit
C0273 / 13 (DI-276)	Open or short circuit in ABS motor relay circuit	●ABS motor relay ●ABS motor relay circuit
C0226 / 21 (DI-273)	Open or short circuit in brake actuator	●Brake actuator ●SFRR or SFRH circuit
C0236 / 22 (DI-273)	Open or short circuit in brake actuator	●Brake actuator ●SFLR or SFLH circuit
C0246 / 23 (DI-273)	Open or short circuit in brake actuator	●Brake actuator ●SRRR or SRRH circuit
C0256 / 24 (DI-273)	Open or short circuit in brake actuator	●Brake actuator ●SRLR or SRLH circuit
C0200 / 31* (DI-267)	Right front wheel speed sensor signal malfunction	●Right front, left front, right rear and left rear speed sensor ●Each speed sensor circuit ●Speed sensor rotor
C0205 / 32* (DI-267)	Left front wheel speed sensor signal malfunction	
C0210 / 33* (DI-267)	Right rear wheel speed sensor signal malfunction	
C0215 / 34* (DI-267)	Left rear wheel speed sensor signal malfunction	
C1330 / 35* (DI-267)	Open circuit in right front speed sensor circuit	●Right front speed sensor ●Right front speed sensor circuit
C1331 / 36* (DI-267)	Open circuit in left front speed sensor circuit	●Left front speed sensor ●Left front speed sensor circuit
C1237 / 37 (DI-295)	Front tires are different from rear in size.	●Tire size ●Speed sensor rotor
C1332 / 38* (DI-267)	Open circuit in right rear speed sensor circuit	●Right rear speed sensor ●Right rear speed sensor circuit
C1333 / 39* (DI-267)	Open circuit in left rear speed sensor circuit	●Left rear speed sensor ●Left rear speed sensor circuit
C1241 / 41 (DI-297)	Low battery positive voltage or abnormally high battery positive voltage	●Battery ●Charging system ●Power source circuit
C1249 / 58 (DI-303)	Open circuit in stop light switch circuit	●Stop light switch ●Stop light switch circuit

C1300 / 62 (DI-305)	Malfunction in ABS & BA & TRAC & VSC ECU	ABS & BA & TRAC & VSC ECU
Always ON (DI-319)	Malfunction in ABS & BA & TRAC & VSC ECU Open circuit in ABS warning light circuit	●Charging system ●ABS warning light circuit

*: As the DTC cannot be erased only by replacing parts, do either of the following operations.
(1) Clear DTC (See page DI-252).
(2) At a vehicle speed of 20 km/h (12 mph), drive the vehicle for 30 sec. or more.

DTC chart of VSC system:

DTC No. (See Page)	Detection Item	Trouble Area
C1225 / 25 (DI-273)	Open or short circuit in brake actuator solenoid circuit (SMC1 circuit)	●Brake actuator ●SMC1 circuit
C1226 / 26 (DI-273)	Open or short circuit in brake actuator solenoid circuit (SMC2 circuit)	●Brake actuator ●SMC2 circuit
C1227 / 27 (DI-273)	Open or short circuit in brake actuator solenoid circuit (SRC1 circuit)	●Brake actuator ●SRC1 circuit
C1228 / 28 (DI-273)	Open or short circuit in brake actuator solenoid circuit (SRC2 circuit)	●Brake actuator ●SRC2 circuit
C1301 / 42*	Malfunction in communication with the translate ECU	●Brake fluid level warning switch circuit ●Translate ECU ●Translate ECU circuit ●ECM ●ECM circuit
C0365 / 43 (DI-285)	Malfunction in deceleration sensor (combined in yaw rate sensor)	●Deceleration sensor ●Deceleration sensor circuit
C1202 / 44 (DI-290)	Brake fluid level low Open circuit in brake fluid level warning switch circuit	●Brake fluid level ●Brake fluid level warning switch ●Brake fluid level warning switch circuit
C1350 / 51 (DI-306)	Pump motor is locked Open circuit in pump motor ground	●Brake actuator pump motor ●Brake actuator pump motor circuit
C1351 / 52 (DI-308)	VSC pump motor is locked Open or short circuit in VSC pump motor circuit	●Precharge pump motor ●Precharge pump motor circuit
C1246 / 53 (DI-300)	Malfunction in master cylinder pressure sensor	●Master cylinder pressure sensor ●Master cylinder pressure sensor circuit
C1208 / 54 (DI-292)	Malfunction in steering angle sensor	●Steering angle sensor ●Steering angle sensor circuit
C0371 / 55 (DI-287)	Malfunction in yaw rate sensor circuit	●Yaw rate sensor ●Yaw rate sensor circuit
Always ON (DI-322)	Malfunction in ABS & BA & TRAC & VSC ECU Open circuit in VSC warning light circuit	●Charging system ●VSC warning light circuit

*: Troubleshoot according to the DTC chart of the translate ECU.

DTC chart of translate ECU(output NG code DTC of VSC system C1301/42 only):

DTC No. (See Page)	Detection Item	Trouble Area
Normal code* (DI-317)	Malfunction in ECM control system	●ECM circuit ●ECM ●Brake fluid level ●Brake fluid level warning switch circuit ●Steering angle sensor ●ABS & BA & TRAC & VSC ECU
42 (DI-311)	Malfunction in communication with the ABS & BA & TRAC & VSC ECU	●VSC+ or VSC- circuit ●Translate ECU ●ABS & BA & TRAC & VSC ECU
44 (DI-313)	Open or short circuit in NEO circuit	●NEO circuit ●ECM ●Translate ECU
53 (DI-315)	Malfunction in communication with the ECM	●TRC+ or TRC- circuit ●ENG+ or ENG- circuit ●ECM ●Translate ECU
Non code (DI-318)	Malfunction in translate ECU	●Tc terminal circuit ●BRAKE warning light circuit ●Translate ECU

*: Translate ECU is normal.

HINT:

The BRAKE warning light does not turn on due to an error in VSC.

If it is on, check that the parking brake pedal is released, the brake fluid level is normal and no malfunction is identified in the fluid level warning switch system.

ABS WITH EBD & BA & TRAC & VSC SYSTEM

DI6NQ-01

HOW TO PROCEED WITH TROUBLESHOOTING

Troubleshoot in accordance with the procedure on the following pages.

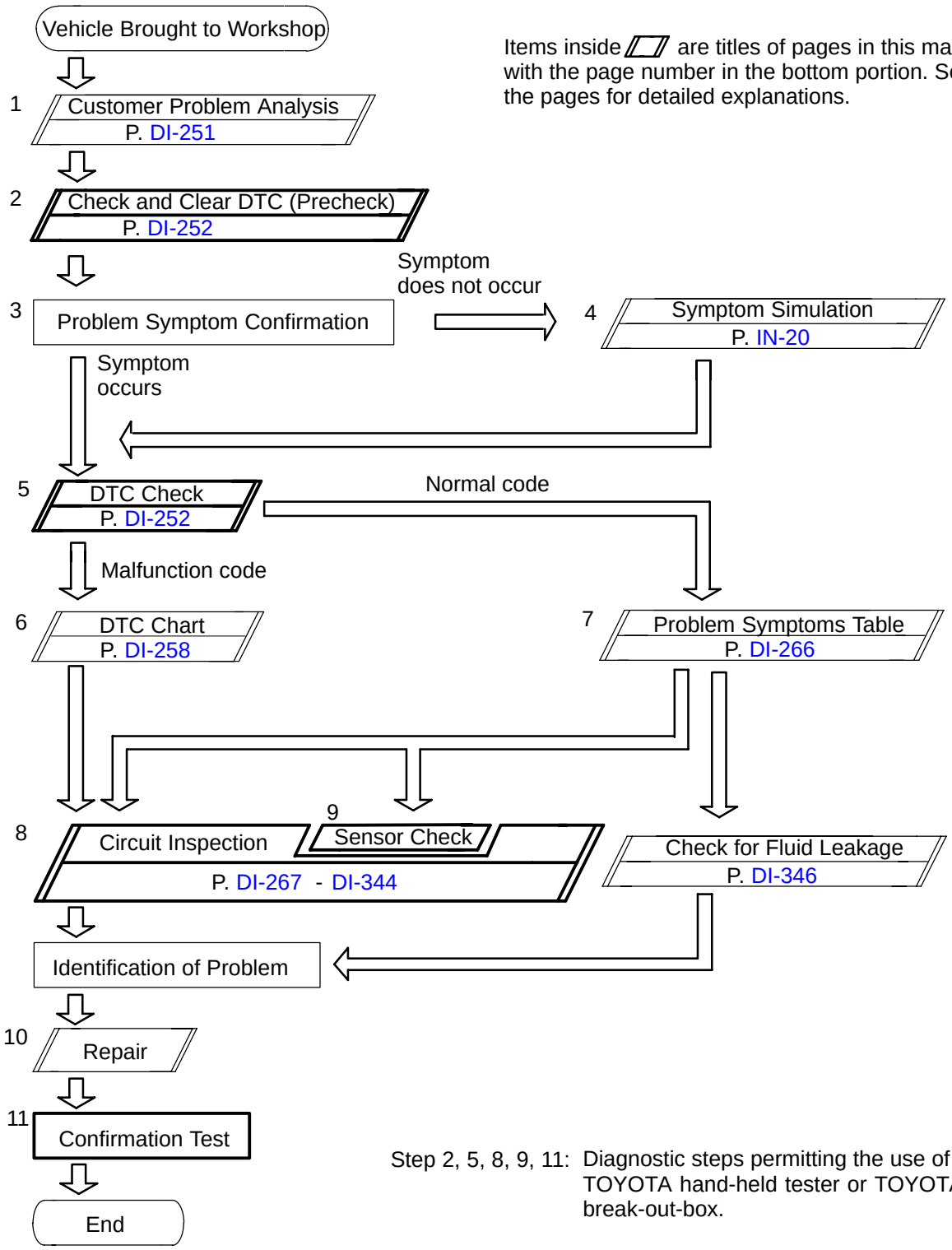

Items inside ▱ are titles of pages in this manual, with the page number in the bottom portion. See the pages for detailed explanations.

Step 2, 5, 8, 9, 11: Diagnostic steps permitting the use of the TOYOTA hand-held tester or TOYOTA break-out-box.

Fail safe function:
When a failure occurs in the ABS & BA & TRAC & VSC system, the respective warning light (ABS, VSC) is lit and the operation of ABS & BA & TRAC & VSC is prohibited. In addition to this, when the failure which disables the EBD operation occurs, the brake warning light is lit as well and the EBD operation is prohibited.

DI6NU-01

PARTS LOCATION

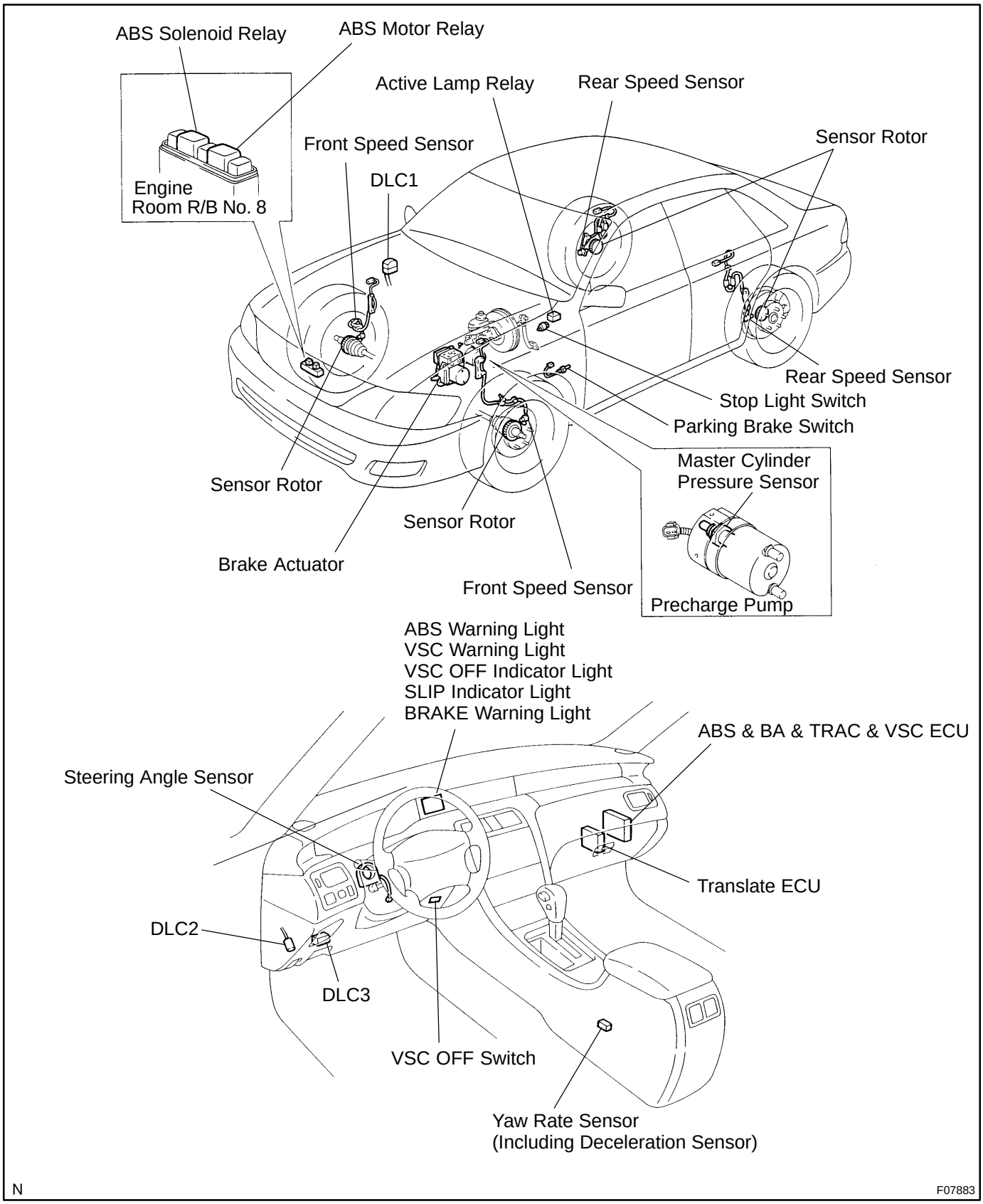

N

F07883

DI6NS-01

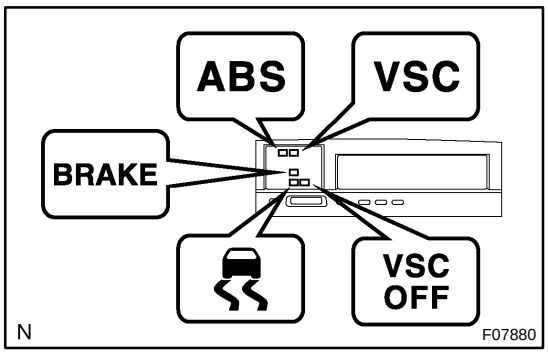

PRE-CHECK

1. DIAGNOSIS SYSTEM

(a) Check the warning lights.

(1) Release the parking brake pedal.

(2) When the ignition switch is turned ON, check that the ABS warning light, VSC warning light, VSC OFF indicator light, BRAKE warning light and SLIP indicator light goes on for approx. 3 seconds.

HINT:

- When the parking brake is applied or the level of the brake fluid is low, the BRAKE warning light is lit.
- If the indicator check result is not normal, proceed to troubleshooting for the ABS warning light circuit, VSC warning light circuit, VSC OFF indicator light circuit, BRAKE warning light circuit or SLIP indicator light circuit.

Trouble Area	See page
ABS warning light circuit	DI-325
VSC warning light circuit	DI-327
VSC OFF indicator light circuit	DI-336
BRAKE warning light circuit	DI-330
SLIP indicator light circuit	DI-333

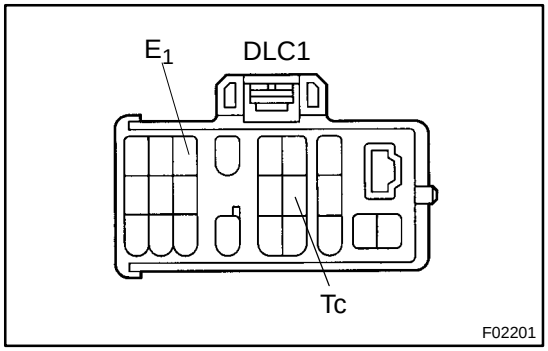

(b) In case of not using TOYOTA hand-held tester:
Check the DTC of ABS & BA & TRAC & VSC ECU.

(1) Using SST, connect terminals Tc and E_1 of DLC1.
SST 09843-18020

(2) Turn the ignition switch ON.

(3) Read the DTC from the ABS warning light and VSC warning light on the combination meter.

HINT:

- If no code appears, inspect the diagnostic circuit, ABS warning light circuit or VSC waning light circuit.

Trouble Area	See page
Tc terminal circuit	DI-342
ABS warning light circuit	DI-325
VSC warning light circuit	DI-327

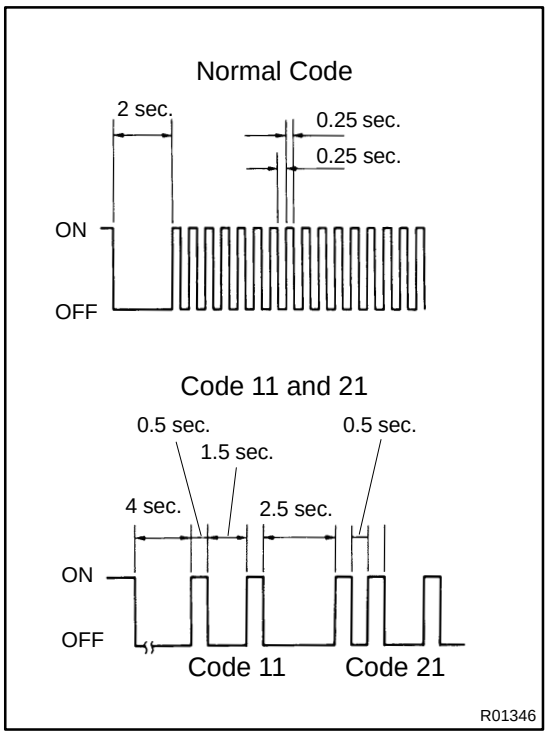

- As an example, the blinking patterns for normal code and codes 11 and 21 are shown on the left.

(4) Codes are explained in the code table on page DI-258 .

(5) After completing the check, disconnect terminals Tc and E_1, and turn off the display.

If 2 or more malfunction codes are identified at the same time, the lowest numbered DTC will be displayed 1st.

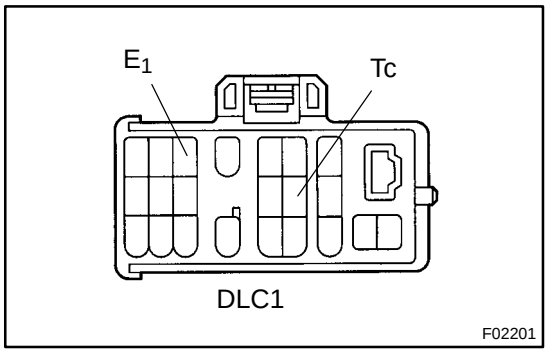

(c) In case of not using TOYOTA hand-held tester:
Check the DTC of translate ECU.

(1) Release the parking brake pedal.

(2) Check the brake fluid level.

(3) Using SST, connect terminals Tc and E_1 of DLC1.
SST 09843-18020

(4) Turn the ignition switch ON.

(5) Read the DTC from the BRAKE warning light.

HINT:

- If no code appears, inspect the diagnostic circuit, and BRAKE warning light circuit.

Trouble Area	See page
Tc terminal circuit	DI-342
BRAKE warning light circuit	DI-330

- When the parking brake is applied or the level of the brake fluid is low, the BRAKE warning light is lit.
- If every sensor is normal, a normal code is output. (A cycle of 0.25 sec. ON and 0.25 sec. OFF is repeated.)
- If 2 or more malfunction codes are identified at the same time, the lowest numbered code will be displayed 1st.

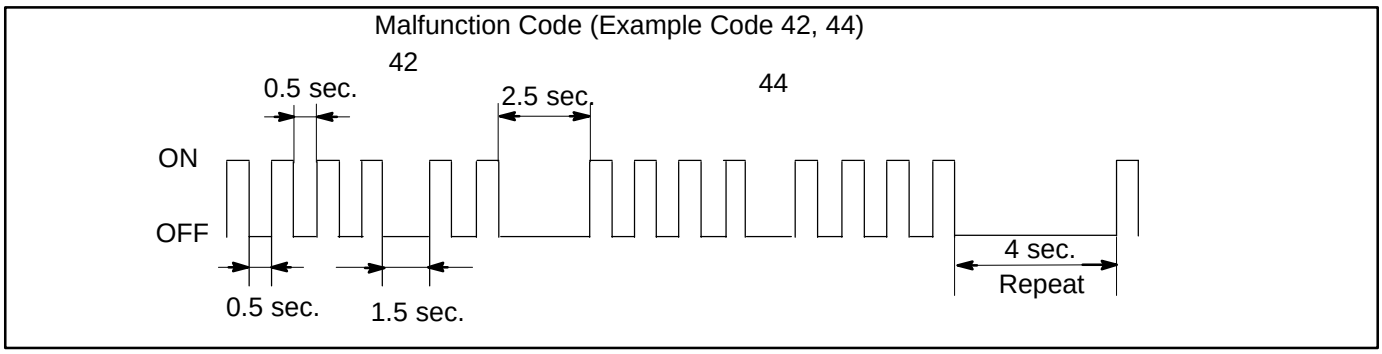

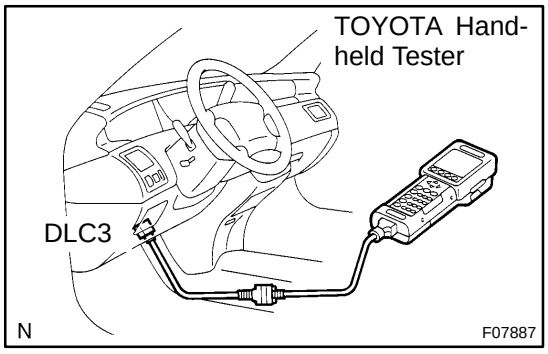

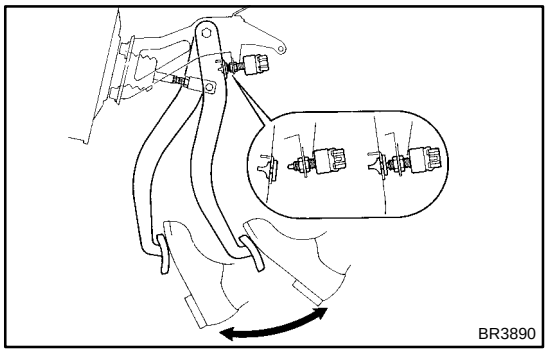

(d) In case of using TOYOTA hand-held tester:
Check the DTC.
(1) Hook up the TOYOTA hand- held tester to the DLC3.
(2) Turn the ignition switch ON.
(3) Read the DTC by following the prompts on the tester screen.

HINT:
Please refer to the TOYOTA hand-held tester operator's manual for further details.

(e) In case of not using TOYOTA hand-held tester:
Clear the DTC.
(1) Using SST, connect terminals Tc and E_1 of DLC1.
SST 09843-18020
(2) Turn the ignition switch ON.
(3) Clear the DTC stored in ECU by depressing the brake pedal 8 times or more within 5 seconds.
(4) Check that the warning light shows the normal code.
(5) Remove the SST from the terminals of DLC1.
SST 09843-18020

HINT:
Cancellation cannot be done by removing the battery cable or ECU-IG fuse.

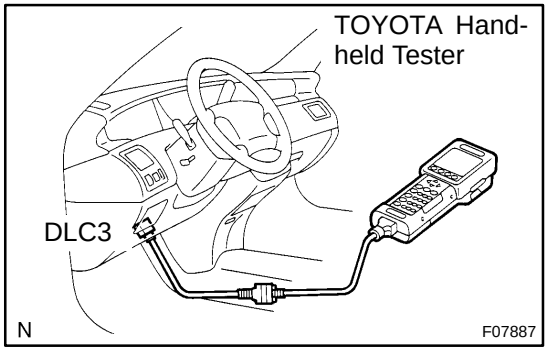

(f) In case of using TOYOTA hand-held tester:
Clear the DTC.
(1) Hook up the TOYOTA hand- held tester to the DLC3.
(2) Turn the ignition switch ON.
(3) Operate the TOYOTA hand-held tester to erase the codes.

HINT:
Please refer to the TOYOTA hand-held tester operator's manual for further details.

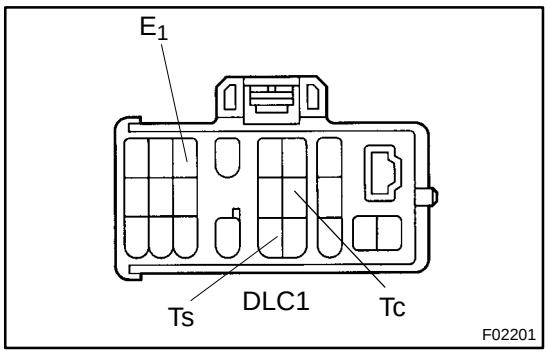

2. SPEED SENSOR SIGNAL CHECK (TEST MODE)

(a) In case of not using TOYOTA hand-held tester:
Check the sensor signal.

(1) Turn the ignition switch OFF.

(2) Using SST, connect terminals Ts and E_1 of DLC1.
SST 09843-18020

(3) Start the engine.

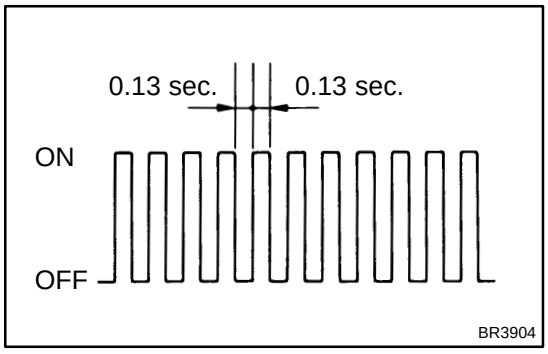

(4) Check that the ABS warning light blinks.

HINT:
If the ABS warning light does not blink, inspect the ABS warning light circuit (See page DI-325).

(5) Drive vehicle straight forward.
Drive vehicle at a speed faster than 45 km/h (28 mph) for several seconds.

HINT:
The sensor check may not be completed if the front wheels are spun or the steering wheel is steered during this check.

(6) Stop the vehicle.

(7) Using SST, connect terminals Tc and E_1 of DLC1.
SST 09843-18020

(8) Read the number of blinks of the ABS warning light.

HINT:

- See the list of DTC shown on the next page.
- If every sensor is normal, a normal code is output (A cycle of 0.25 sec. ON and 0.25 sec. OFF is repeated).
- If 2 or more malfunction codes are identified at the same time, the lowest numbered code will be displayed 1st.

Malfunction Code (Example Code 72, 76)

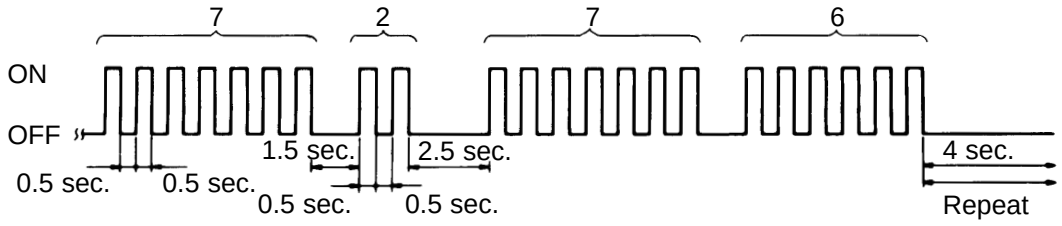

(9) After doing the check, disconnect the SST from terminals Ts and E_1, Tc and E_1 of DLC1, and turn the ignition switch OFF.
SST 09843-18020

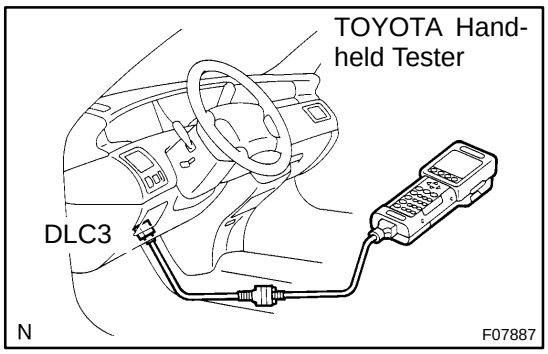

(b) In case of using TOYOTA hand-held tester:
Check the sensor signal.
(1) Hook up the TOYOTA hand- held tester to the DLC3.
(2) Do step (3) - (6) on the previous page.
(3) Read the DTC by following the prompts on the tester screen.

HINT:
Please refer to the TOYOTA hand-held tester operator's manual for further details.

DTC of speed sensor check function:

Code No.	Diagnosis	Trouble Area
C1271 / 71	Low output voltage of right front speed sensor	●Right front speed sensor ●Sensor installation ●Right front speed sensor rotor
C1272 / 72	Low output voltage of left front speed sensor	●Left front speed sensor ●Sensor installation ●Left front speed sensor rotor
C1273 / 73	Low output voltage of right rear speed sensor	●Right rear speed sensor ●Sensor installation ●Right rear speed sensor rotor
C1274 / 74	Low output voltage of left rear speed sensor	●Left rear speed sensor ●Sensor installation ●Left rear speed sensor rotor
C1275 / 75	Abnormal change in output signal of right front speed sensor	Right front speed sensor rotor
C1276 / 76	Abnormal change in output signal of left front speed sensor	Left front speed sensor rotor
C1277 / 77	Abnormal change in output signal of right rear speed sensor	Right rear speed sensor rotor
C1278 / 78	Abnormal change in output signal of left rear speed sensor	Left rear speed sensor rotor

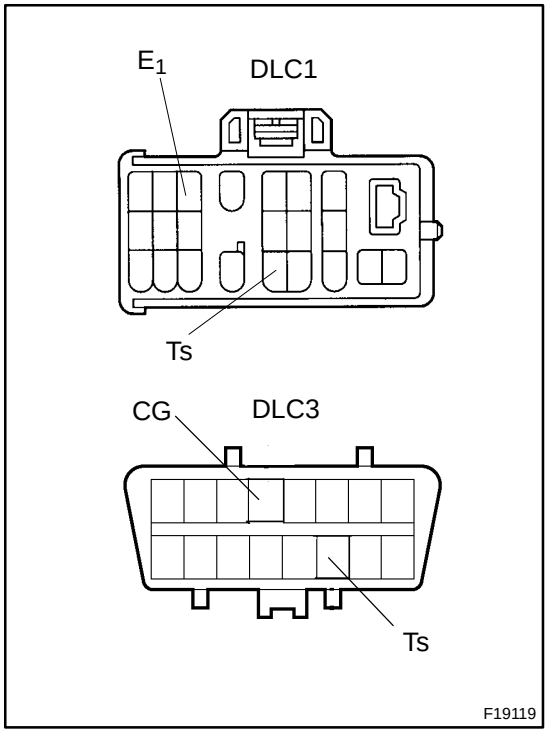

3. STEERING ANGLE SENSOR ZERO POINT CALIBRATION

NOTICE:

Make sure to perform steering angle sensor zero point calibration when:

- **Replacing the steering angle sensor or ECU.**
- **Adjusting the front wheel alignment of the steering wheel center point in accordance with removal and installation or replacement of the suspension, axle or steering parts.**

(a) Using the SST, connect terminals Ts and E_1 of DLC1 or Ts and CG of DLC3.
SST DLC1: 09843-18020
DLC3: 09843-18040

(b) Turn the ignition switch to the ON position, without starting the engine.

(c) Make sure the steering wheel off center angle is within 3 degrees of center before attempting calibration.

HINT:
If the off center angle is greater than 3 degrees from center, further adjustments to the tie rods may be necessary.

(d) Shift the gear selector switch to the P range.
(e) Press the VSC OFF switch and hold it while depressing the brake pedal 3 times within 2 seconds.
(f) Continue to hold the VSC OFF switch until the VSC buzzer (repeated beeping) sounds.
(g) Release the VSC OFF switch. The VSC buzzer will continue to sound for 3 seconds confirming the operation is complete.

HINT:
If the procedure is done correctly and VSC buzzer does not sound, there may be a malfunction of the steering angle sensor.

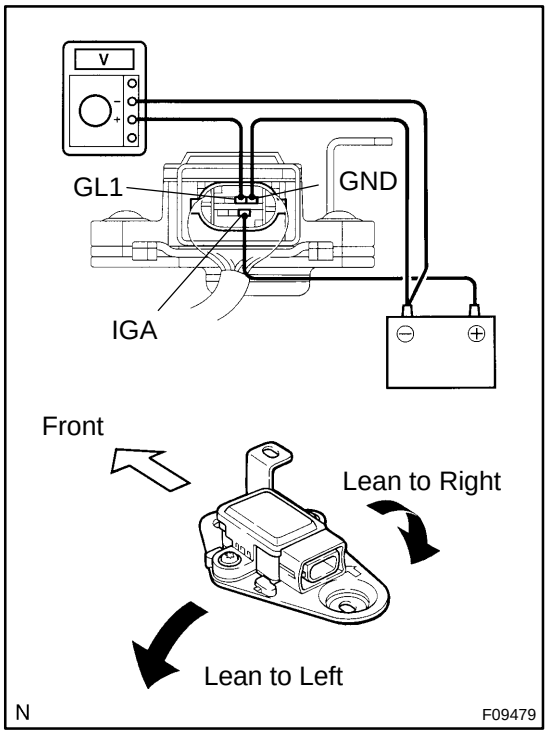

4. DECELERATION SENSOR CHECK

(a) Apply battery positive voltage.
(b) Connect IGA terminal to the battery positive (+) terminal, and GND terminal to the battery negative (-) terminal, and apply about 12 V between IGA and GND terminals.
(c) Check the output voltage of GL1 terminal.

Symbols	Condition	Standard Value
GL1	Horizontal	About 2.5 V
GL1	Lean right down	About 2.3 V - 4V
GL1	Lean left down	1 V - About 2.3 V

HINT:

- If the sensor is tilted too much, it may show the wrong value.
- If dropped, the sensor should be replaced with a new one.
- The sensor removed from the vehicle should not be placed upside down.

DI6NW-01

PROBLEM SYMPTOMS TABLE

If a normal code is displayed during the DTC check but the problem still occurs, check the circuits for each problem symptom in the order given in the table below and proceed to the relevant troubleshooting page.

NOTICE:

When replacing ABS & BA & TRAC & VSC ECU, sensor, etc., turn the IG switch OFF.

Symptom	Suspect Area	See page
ABS does not operate	Only when 1. - 4. are all normal and the problem is still occurring, replace the ABS & BA & TRAC & VSC ECU. 4. Check the DTC, reconfirming that the normal code is output. 5. IG power source circuit 6. Speed sensor circuit 7. Check the brake actuator with a hand-held tester. If abnormal, check the hydraulic circuit for leakage (See page DI-346).	 DI-252 DI-297 DI-267 BR-52
ABS does not operate efficiently	Only when 1. - 4. are all normal and the problem is still occurring, replace the ABS & BA & TRAC & VSC ECU. 1. Check the DTC, reconfirming that the normal code is output. 2. Speed sensor circuit 3. Stop light switch circuit 4. Check the brake actuator with a hand-held tester. If abnormal, check the hydraulic circuit for leakage (See page DI-346).	 DI-252 DI-267 DI-303 BR-52
ABS warning light abnormal	1. ABS warning light circuit 2. ABS & BA & TRAC & VSC ECU	DI-325
DTC check cannot be done	Only when 1. - 4. are all normal and the problem is still occurring, replace the ABS & BA & TRAC & VSC ECU. 1. ABS warning light circuit 2. VSC warning light circuit 3. Tc terminal circuit	 DI-325 DI-327 DI-342
Speed sensor signal check cannot be done	1. Ts terminal circuit 2. ABS & BA & TRAC & VSC ECU	DI-344
VSC does not operate	Only when circuits inspected for each problem symptom are all normal and the problem is still occurring, replace the ABS & BA & TRAC & VSC ECU. 1. Check the DTC, reconfirming that the normal code is output. 2. IG power source circuit 3. Hydraulic circuit for leakage 4. Speed sensor circuit	 DI-252 DI-297 DI-346 DI-267
BA does not operate	Stop light switch circuit	DI-303
SLIP indicator light abnormal	SLIP indicator light circuit	DI-333
BRAKE warning light abnormal	1. BRAKE warning light circuit 2. ABS & BA & TRAC & VSC ECU	DI-330
VSC OFF indicator light abnormal	Only when circuits inspected for each problem symptom are all normal and the problem is still occurring, replace the ABS & BA & TRAC & VSC ECU. 1. VSC OFF indicator light circuit 2. VSC OFF switch circuit	 DI-336 DI-336

DI6NV-03

TERMINALS OF ECU

ABS & BA & TRAC & VSC ECU:

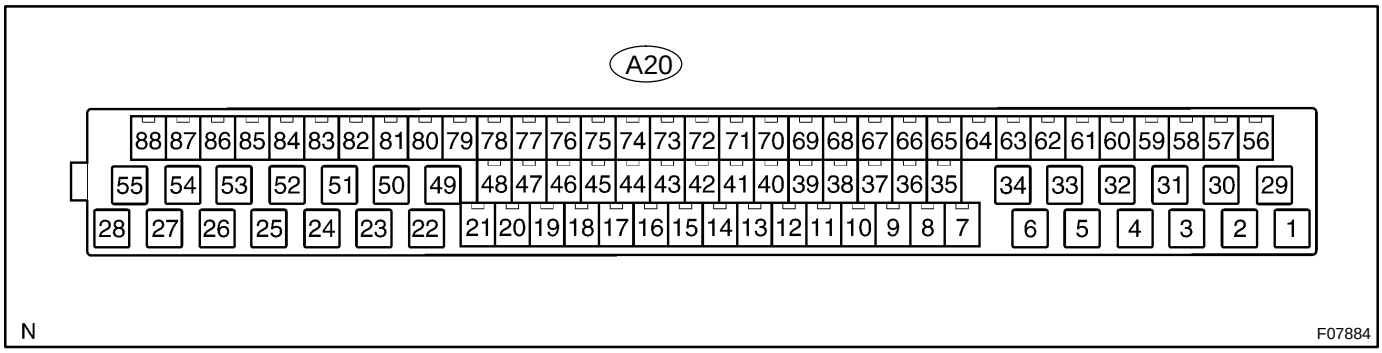

Symbols (Terminals No.)	Wiring Color	Condition	STD Voltage (V)
IG1 (A20 - 1) - GND (A20 - 28, 29)	Y-R ↔ W-B	IG switch ON	10 - 14
R+ (A20 - 2) - SR (A20 - 36)	GR-R ↔ R	IG switch ON, ABS warning light OFF	10 - 14
R+ (A20 - 2) - MR (A20 - 7)	GR-R ↔ GR-L	IG switch ON	Below 1.0
SFLR (A20 - 3) - GND (A20 - 28, 29)	G-O ↔ W-B	IG switch ON, ABS warning light OFF	10 - 14
SRRR (A20 - 4) - GND (A20 - 28, 29)	G-R ↔ W-B	IG switch ON, ABS warning light OFF	10 - 14
SFLH (A20 - 5) - GND (A20 - 28, 29)	W-R ↔ W-B	IG switch ON, ABS warning light OFF	10 - 14
SRRH (A20 - 6) - GND (A20 - 28, 29)	GR ↔ W-B	IG switch ON, ABS warning light OFF	10 - 14
FL+ (A20 - 8) - FL- (A20 - 10)	BR ↔ B-R	IG switch ON, slowly turn left front wheel	AC generation
RR+ (A20 - 11) - RR- (A20 - 12)	G ↔ Y	IG switch ON, slowly turn right rear wheel	AC generation
RL+ (A20 - 13) - RL- (A20 - 14)	LG ↔ V	IG switch ON, slowly turn left rear wheel	AC generation
FR+ (A20 - 17) - FR- (A20 - 16)	B-W ↔ L	IG switch ON, slowly turn right front wheel	AC generation
GL1 (A20 - 18) - GND (A20 - 28, 29)	G ↔ W-B	IG switch ON	0.5 - 4.5
ML+ (A20 - 22) - ML- (A20 - 24)	W-R ↔ V	IG switch ON	10 - 14
SRLR (A20 - 25) - GND (A20 - 28, 29)	L-Y ↔ W-B	IG switch ON, ABS warning light OFF	10 - 14
SFRH (A20 - 26) - GND (A20 - 28, 29)	B-W ↔ W-B	IG switch ON, ABS warning light OFF	10 - 14
MT (A20 - 27) - GND (A20 - 28, 29)	O ↔ W-B	IG switch ON, ABS warning light OFF	Below 1.5
IND (A20 - 31) - GND (A20 - 28, 29)	V ↔ W-B	IG switch ON, SLIP indicator light ON	Below 2.0
		IG switch ON, SLIP indicator light OFF	10 - 14
EBDW (A20 - 32) - GND (A20 - 28, 29)	R-Y ↔ W-B	IG switch ON, BRAKE warning light OFF	Below 1.5
		IG switch ON, BRAKE warning light ON	10 - 14
LBL (A20 - 40) - GND (A20 - 28, 29)	L-B ↔ W-B	IG switch ON, fluid level switch ON	Below 1.0

Ts (A20 - 42) - GND (A20 - 28, 29)	LG-B ↔ W-B	IG switch ON	10 - 14
CSW (A20 - 44) - GND (A20 - 28, 29)	W-L ↔ W-B	IG switch ON, VSC OFF indicator ON	Below 1.5
		IG switch ON, VSC OFF indicator OFF	8 - 14
D/G (A20 - 46) - GND (A20 - 28, 29)	W ↔ W-B	IG switch ON	10 - 14
STP (A20 - 48) - GND (A20 - 28, 29)	G-W ↔ W-B	Stop light switch ON (Brake pedal pushed)	8 - 14
		Stop light switch OFF (Brake pedal released)	Below 1.5
SMC1 (A20 - 49) - GND (A20 - 28, 29)	G-Y ↔ W-B	IG switch ON, ABS warning light OFF	10 - 14
SMC2 (A20 - 50) - GND (A20 - 28, 29)	V-W ↔ W-B	IG switch ON, ABS warning light OFF	10 - 14
BAT (A20 - 51) - GND (A20 - 28, 29)	W-L ↔ W-B	IG switch OFF	10 - 14
SRC2 (A20 - 52) - GND (A20 - 28, 29)	R-B ↔ W-B	IG switch ON, ABS warning light OFF	10 - 14
SRLH (A20 - 53) - GND (A20 - 28, 29)	Y-B ↔ W-B	IG switch ON, ABS warning light OFF	10 - 14
SRC1 (A20 - 54) - GND (A20 - 28, 29)	B-Y ↔ W-B	IG switch ON, ABS warning light OFF	10 - 14
SFRR (A20 - 55) - GND (A20 - 28, 29)	W-G ↔ W-B	IG switch ON, ABS warning light OFF	10 - 14
SS1 (A20 - 59) - GND (A20 - 28, 29)	W ↔ W-B	IG switch ON	Pulse generation
FSS (A20 - 60) - GND (A20 - 28, 29)	BR ↔ W-B	IG switch OFF	Continuity
SS2 (A20 - 61) - GND (A20 - 28, 29)	O ↔ W-B	IG switch ON	Pulse generation
VCM (A20 - 65) - GND (A20 - 28, 29)	P-L ↔ W-B	IG switch ON	4.5 - 5.5
PMC (A20 - 66) - GND (A20 - 28, 29)	R-L ↔ W-B	IG switch ON, brake pedal released	0.3 - 0.8
E_2 (A20 - 67) - GND (A20 - 28, 29)	BR-Y ↔ W-B	IG switch OFF	Continuity
SP1 (A20 - 68) - GND (A20 - 28, 29)	L-O ↔ W-B	Vehicle driveing at about 20 km/h (12 mph)	Pulse generation
WT (A20 - 69) - GND (A20 - 28, 29)	Y-R ↔ W-B	IG switch ON, VSC OFF indicator light ON	Below 2.0
		IG switch ON, VSC OFF indicator light OFF	10 - 14
VSCW (A20 - 70) - GND (A20 - 28, 29)	P-B ↔ W-B	IG switch ON, VSC warning light ON	Below 2.0
		IG switch ON, VSC warning light OFF	10 - 14
PKB (A20 - 74) - GND (A20 - 28, 29)	Y-G ↔ W-B	IG switch ON, parking brake switch ON	Below 2.0
		IG switch ON, parking brake switch OFF	10 - 14
YD (A20 - 75) - GND (A20 - 28, 29)	BR ↔ W-B	IG switch ON, VSC warning light OFF	4.5 - 5.5
GYAW (A20 - 76) - GND (A20 - 28, 29)	Y ↔ W-B	IG switch OFF	Continuity
YAW (A20 - 77) - GND (A20 - 28, 29)	L ↔ W-B	IG switch ON, vehicle stationaly condition	2 - 3

WA (A20 - 81) - GND (A20 - 28, 29)	B ↔ W-B	IG switch ON, ABS warning light ON	10 - 14
		IG switch ON, ABS warning light OFF	Below 2.0
Tc (A20 - 84) - GND (A20 - 28, 29)	LG-R ↔ W-B	IG switch ON	10 - 14
Bz (A20 - 86) - GND (A20 - 28, 29)	L-W ↔ W-B	IG switch ON, VSC buzzer sounds	Below 1.0 ↔ 10 - 14
		IG switch ON, VSC buzzer does not sound	10 - 14

Translate ECU:

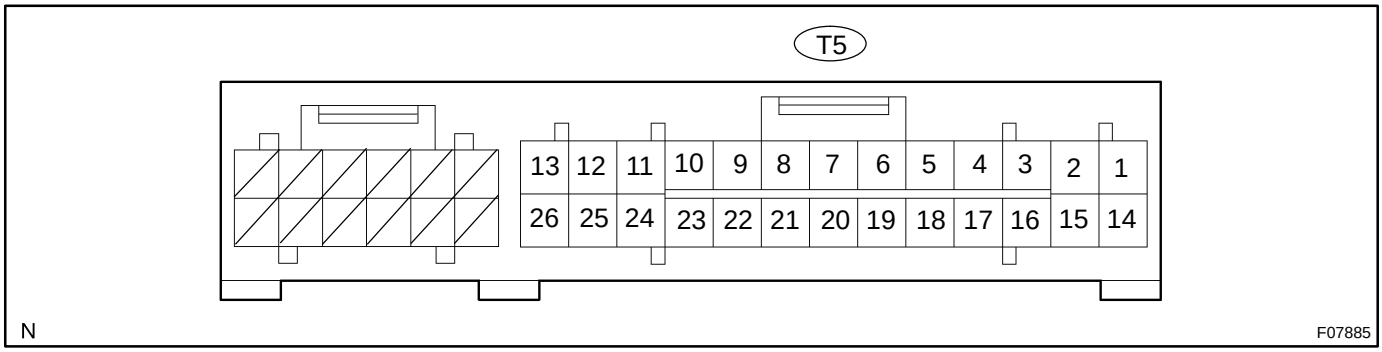

Symbols (Terminals No.)	Wiring Color	Condition	STD Voltage (V)
IG1(T5 - 1) - GND (T5 - 14)	Y-R ↔ W-B	IG switch ON	10 - 14
PKB2 (T5 - 2) - GND (T5 - 14)	Y-G ↔ W-B	IG switch ON, paking brake switch ON	Below 2.0
		IG switch ON, paking brake switch OFF	10 - 14
VSC+ (T5 - 4) - VSC- (T5 - 17)	W ↔ O	Engine idling	Pulse generation
SS1 (T5 - 5) - SS2 (T5 - 18)	L ↔ B-W	Engine idling	Pulse generation
RSS (T5 - 6) - GND (T5 - 14)	BR ↔ W-B	IG switch OFF	Continuity
P (T5 - 10) - GND (T5 - 14)	G-W ↔ W-B	IG switch ON, shift lever is in P range	8 - 14
		IG switch ON, shift lever is in other than P range	Below 1.5
LVL2 (T5 - 11) - GND (T5 - 14)	R-W ↔ W-B	IG switch ON, fluid level switch ON	Below 1.5
D (T5 - 12) - GND (T5 - 14)	Y-R ↔ W-B	IG switch ON, shift lever is in D range	8 - 14
		IG switch ON, shift lever is in other than D range	Below 1.5
NEO (T5 - 13) - GND (T5 - 14)	Y-B ↔ W-B	Engine idling	Pulse generation
PKB (T5 - 15) - GND (T5 - 14)	Y-G ↔ W-B	IG switch OFF, parking brake switch ON	Below 2.0
BRL (T5 - 16) - GND (T5 - 14)	R-W ↔ W-B	IG switch ON, BRAKE warning light ON	Below 2.0
		IG switch ON, BRAKE warning light OFF	10 - 14
TRC+ (T5 - 20) - TRC- (T5 - 7)	BR ↔ W-B	Engine idling	Pulse generation
Tc (T5 - 21) - GND (T5 - 14)	LG-R ↔ W-B	IG switch ON	10 - 14
ENG+ (T5 - 22) - ENG- (T5 - 9)	V ↔ GR	Engine idling	Pulse generation
Ts (T5 - 24) - GND (T5 - 14)	LG-B ↔ W-B	IG switch ON	10 - 14
LBL (T5 - 25) - GND (T5 - 14)	L-B ↔ W-B	IG switch ON, fluid level switch ON	Below 1.0
CCS (T5 - 26) - GND (T5 - 14)	Y-R ↔ W-B	IG switch ON	Below 2.0

DI02S-08

O/D Cancel Signal Circuit

CIRCUIT DESCRIPTION

While driving uphill with cruise control activated, in order to minimize gear shifting and provide smooth cruising overdrive may be prohibited temporarily under some condition.
The cruise control ECU sends O/D cut signals to the ECM as necessary and the ECM cancels overdrive shifting until these signals are discontinued.

WIRING DIAGRAM

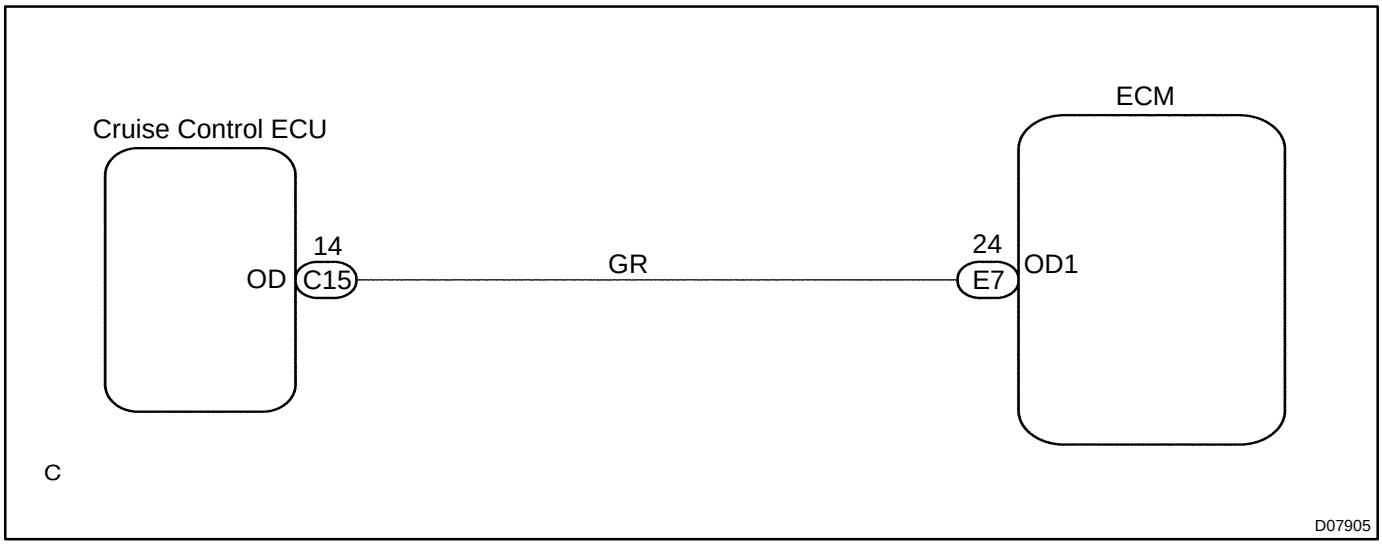

INSPECTION PROCEDURE

1	**Check voltage between terminal OD1 of ECM and body ground.**

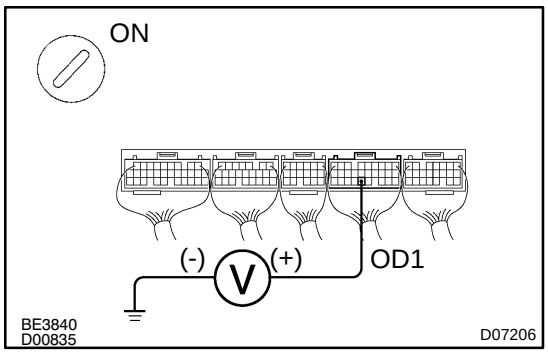

PREPARATION:

(a) Remove the glove compartment.

(b) Turn the ignition switch ON.

CHECK:

Measure voltage between terminal OD1 of ECM and body ground.

OK:

Voltage: 10 - 14 V

OK	**Proceed to next circuit inspection shown on problem symptoms table (See page DI-175).**

NG

2	**Check voltage between terminal OD of cruise control ECU harness side connector and body ground.**

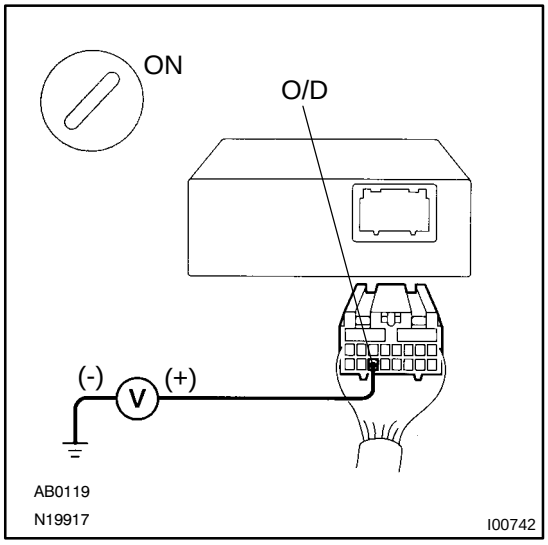

PREPARATION:

(a) Disconnect the cruise control ECU connector.

(b) Turn the ignition switch ON.

CHECK:

Measure voltage between terminal OD of cruise control ECU harness side connector and body ground.

OK:

Voltage: 10 - 14 V

OK	**Check and replace the cruise control ECU (See page IN-30).**

NG

3	**Check harness and connector between cruise control ECU and ECM (See page IN-30).**

NG → **Repair or replace the harness or connector.**

OK

Check and replace the ECM (See page IN-30).

DI1KD-08

O/D Main Switch & O/D OFF Indictor Light Circuit

CIRCUIT DESCRIPTION

The O/D main switch is a momentary type switch. When pressing the O/D OFF main switch, the O/D OFF indicator light lights up and ECM prohibits shifting to O/D, and when pressing it again, the O/D OFF indicator light goes off and ECM allows shifting to O/D. Turning the IG switch OFF will reset the O/D OFF indicator light.

WIRING DIAGRAM

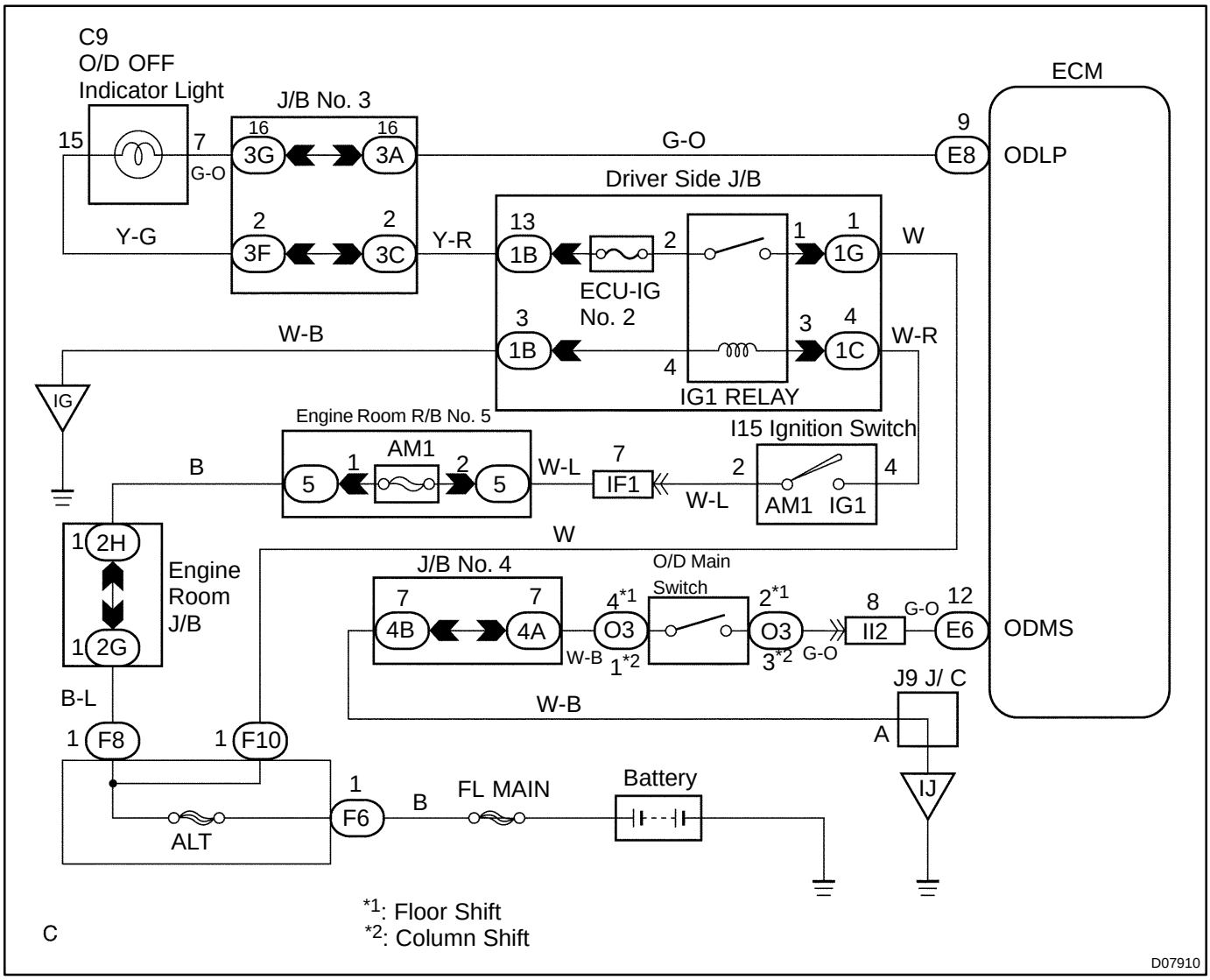

INSPECTION PROCEDURE

1	**Check operation of O/D main switch.**

PREPARATION:

Turn the ignition switch ON.

CHECK:

(a) Check O/D OFF indicator light when O/D main switch is pushed in to ON.

(b) Check O/D OFF indicator light when O/D main switch is pushed again.

OK:

(a) O/D OFF indicator light lights up.

(b) O/D OFF indicator light goes off.

OK → **Proceed to next inspection shown on symptoms problem tables (See page DI-175).**

NG

2	**Check and replace the combination meter (See page BE-2).**

NG → **Replace the combination meter.**

OK

3	Check O/D main switch.

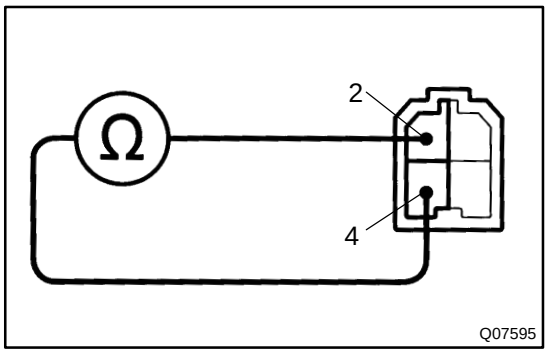

PREPARATION:
Disconnect the O/D main switch connector.
CHECK:
(a) Floor shift:
Check continuity between terminals 2 and 4 of O/D main switch connector.
(b) Column shift:
Check continuity between terminals 1 and 3 of O/D main switch connector.
OK:

O/D main switch condition	Specified condition
Press continuously O/D main switch	Continuously
Release O/D main switch	No continuously

NG → **Replace and repair O/D main switch.**

OK

4	Check voltage between terminal ODMS of ECM and body ground.

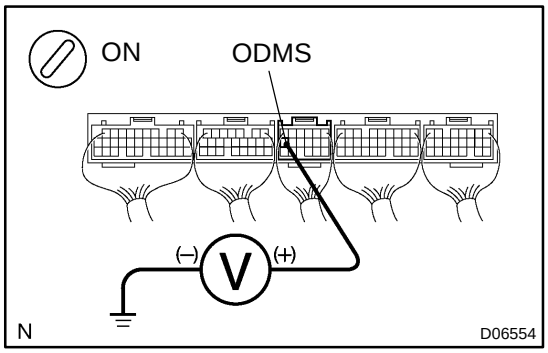

PREPARATION:
Turn the ignition switch ON.
CHECK:
Check voltage between terminal ODMS of ECM and body ground when O/D main switch is ON and OFF.
OK:

O/D main switch condition	Specified condition
Press continuously O/D main switch	Below 1.0 V
Release O/D main switch	10 - 14 V

OK → **Check and replace the ECM (See page IN-30).**

NG

5	Check voltage between terminal ODLP of ECM and body ground.

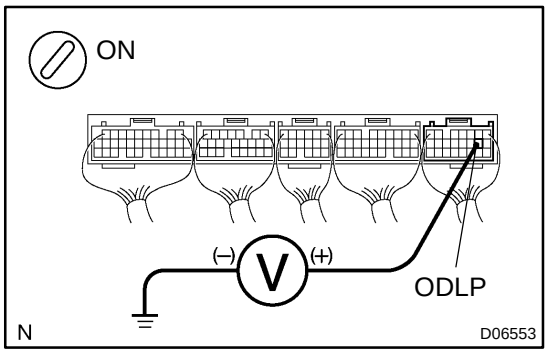

PREPARATION:

(a) Disconnect the connector of ECM.

(b) Turn the ignition switch ON.

CHECK:

Check voltage between terminal ODLP of ECM and body ground.

OK:

Voltage: 7.5 - 14 V

OK	Check and replace the ECM (See page IN-30).

NG

Check and replace harness and connector between combination meter and ECM, O/D main switch and ECM, O/D main switch and body ground. (See page IN-30).

DI4DO-02

CIRCUIT INSPECTION

DTC	P0500	Vehicle Speed Sensor Malfunction

CIRCUIT DESCRIPTION

The speed sensor for ABS detects the wheel speed and sends the appropriate signals to the ABS ECU. The ECU converts these signals in to a 4-pulse signal and outputs it to the combination meter.
After this signal is converted into a more precise rectangular waveform by the waveform shaping circuit inside the combination meter, it is then transmitted to the ECM. The ECM determines the vehicle speed based on the frequency of these pulse signals.

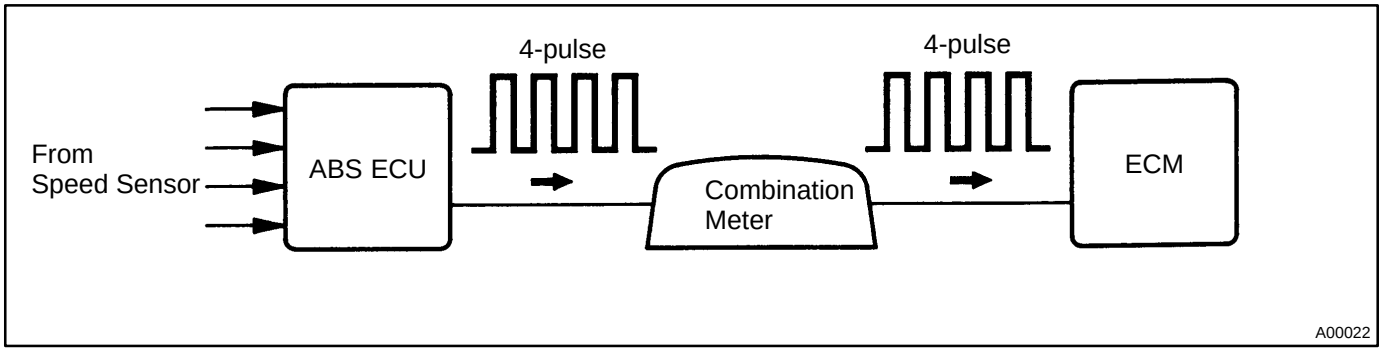

DTC No.	DTC Detecting Condition	Trouble Area
P0500	Satisfying all of the following conditions, 2 sec. (Intake air temperature: -10 °C or more) or 8 sec. (Intake air temperature: less than -10 °C) elapsed. (c) After 2 sec. (the engine coolant temperature: 20 °C or more) or 30 sec. (the engine coolant temperature: less than 20 °C) with the park/neutral position switch set to P, N position. (d) No abnormality of the throttle position sensor is detected. (e) After 0.5 sec. or more with the ignition switch turned ON. (f) No vehicle speed is signal to ECM. (g) The engine rpm is equal to the speed sensor rpm or more when the throttle opening angle is as shown below. 1. The throttle opening angle is less than 13° and the engine rpm is 2,350 or more. 2. The throttle opening angle is less than 21° and the engine rpm is 2,680 or more. 3. The throttle opening angle is less than 30° and the engine rpm is 2,835 or more. 4. The throttle opening angle is less than 30° and the engine rpm is 3,145 or more.	●Open or short in vehicle speed sensor circuit ●ABS speed sensor ●Combination meter ●ECM ●ABS ECU ●Automatic transaxle (clutch, brake or gear etc.)
	Clutch or brake slips or gear is broken (2-trip detection logic)	

WIRING DIAGRAM

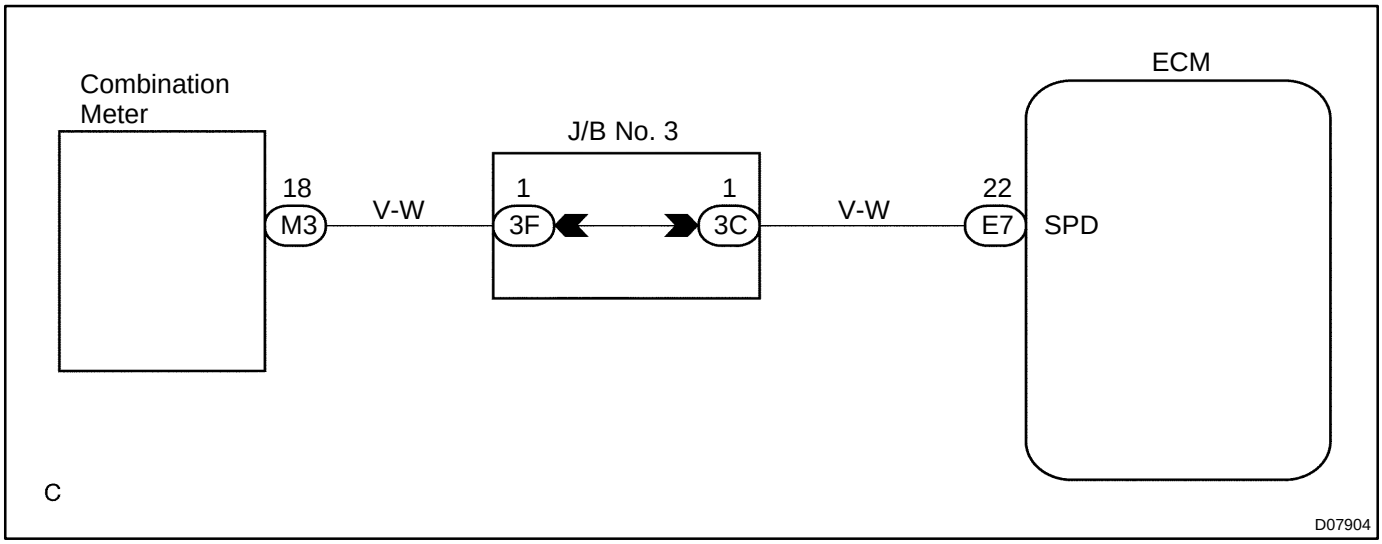

INSPECTION PROCEDURE

1	**Check operation of speedometer.**

CHECK:

Drive the vehicle and check if the operation of the speedometer in the combination meter is normal.

HINT:

The vehicle speed sensor is operating normally if the speedometer display is normal.

NG → **Check speedometer circuit.**

OK

2	**Check for short in harness and connector between terminal SPD of ECM and body ground.**

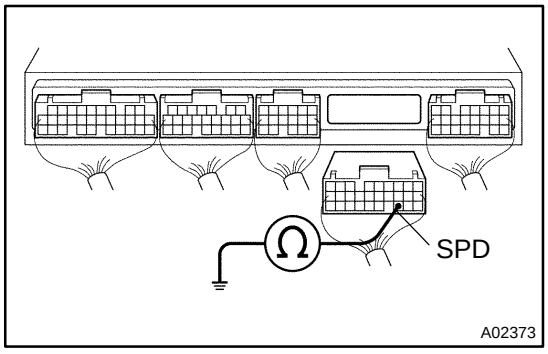

PREPARATION:

(a) Remove the glove compartment (See page BO-90).

(b) Disconnect the connector from ECM.

CHECK:

Check continuity between terminal SPD of ECM and body ground.

OK:

No continuity

NG → **Repair or replace harness or connector.**

OK

3	**Check voltage between terminal SPD of ECM connector and body ground.**

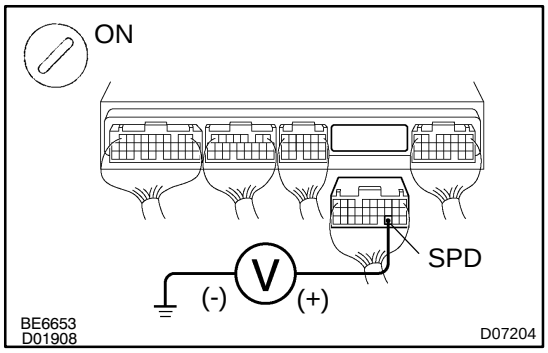

PREPARATION:
Turn the ignition switch ON.
CHECK:
Measure voltage between terminal SPD of ECM connector and body ground.
OK:
Voltage: 9 - 14 V

NG → **Check for open in harness and connector between J/B No. 3 and ECM (See page IN-30).**

OK

4	**Check for open in harness and connector between J/B No. 3 and combination meter (See page IN-30).**

NG → **Repair or replace harness or connector.**

OK

5	**Check ECM (See page IN-30).**

NG → **Replace ECM.**

OK

Check and repair the transaxle (clutch, brake or gear etc.).

DI02K-08

DTC	P0750, P0755	Shift Solenoid A/B Malfunction (Shift Solenoid Valve No.1/No.2)

SYSTEM DESCRIPTION

The ECM uses signals from the vehicle speed sensor and direct clutch speed sensor to detect the actual gear position (1st, 2nd, 3rd or O/D gear).
Then the ECM compares the actual gear with the shift schedule in the ECM memory to detect mechanical trouble of the shift solenoid valves, valve body or automatic transaxle (clutch, brake or gear etc.).

DTC No.	DTC Detecting Condition	Trouble Area
P0750 P0755	During normal driving, the gear required by the ECM does not match the actual gear (2-trip detection logic)	●Shift solenoid valve No.1/No.2 is stuck open or closed ●Valve body is blocked up or stuck ●Automatic transaxle (clutch, brake or gear etc.)

HINT:
Check the shift solenoid valve No.1 when DTC P0750 is output and check the shift solenoid valve No.2 when DTC P0755 is output.

INSPECTION PROCEDURE

1	**Check shift solenoid valve No.1 or No.2 operation.**

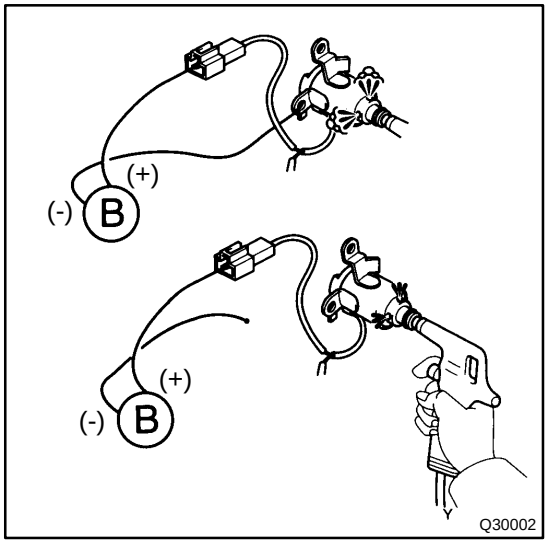

PREPARATION:
(a) Remove the oil pan.
(b) Remove the shift solenoid valve No.1 or No.2.

CHECK:
(a) Applying 490 kPa (5 kgf/cm^2, 71 psi) of compressed air, check that the solenoid valve does not leak air.
(b) When battery positive voltage is supplied to the shift solenoid valve, check that the valve opens.

OK:

(a) Solenoid valve does not leak air.
(b) Solenoid valve opens.

NG → **Replace the shift solenoid valve No.1 or No.2.**

OK

2	Check the valve body (See page DI-175).

NG → Repair or replace the valve body.

OK

Repair the transaxle.

DI02L-08

DTC	P0753, P0758	Shift Solenoid A/B Electrical Malfunction (Shift Solenoid Valve No.1/No.2)

CIRCUIT DESCRIPTION

Shifting from 1st to O/D is performed in combination with ON and OFF of the shift solenoid valves No.1 and No.2 controlled by ECM. If an open or short circuit occurs in either of the shift solenoid valves, the ECM controls the remaining normal shift solenoid valve to allow the vehicle to be operated smoothly (Fail safe function).

Fail safe function:

If either of the shift solenoid valve circuits develops an open or short, the ECM turns the other shift solenoid ON and OFF to shift to the gear positions shown in the table below. The ECM also turns the shift solenoid valve SL OFF at the same time. If both solenoids are malfunctioning, hydraulic control cannot be performed electronically and must be done manually.

Manual shifting as shown in the following table must be done (In the case of a short circuit, the ECM stops sending current to the short circuited solenoid).

Position	NORMAL			SHIFT SOLENOID NO.1 MALFUNCTIONING			SHIFT SOLENOID NO.2 MALFUNCTIONING			BOTH SOLENOIDS MALFUNCTIONING
	Solenoid valve		Gear	Solenoid valve		Gear	Solenoid valve		Gear	Gear when shift selector is manually operated
	No.1	No.2		No.1	No.2		No.1	No.2		
D	ON	OFF	2nd	X	ON	3rd	ON	X	1st	O/D
	ON	ON	1st	X	ON	3rd	OFF	X	O/D	O/D
	OFF	ON	3rd	X	ON	3rd	OFF	X	O/D	O/D
	OFF	OFF	O/D	X	OFF	O/D	OFF	X	O/D	O/D
2	ON	OFF	2nd	X	ON	3rd	ON	X	1st	O/D
	ON	ON	1st	X	ON	3rd	OFF	X	O/D	O/D
	OFF	ON	3rd	X	ON	3rd	OFF	X	O/D	O/D
L	ON	OFF	1st	X	OFF	1st	ON	X	1st	1st
	ON	ON	2nd	X	ON	2nd	ON	X	1st	1st

X: Malfunctions

HINT:

Check the shift solenoid valve No.1 when DTC P0753 is output and check the shift solenoid valve No.2 when DTC P0758 is output.

DTC No.	DTC Detecting Condition	Trouble Area
P0753 P0758	The ECM checks for an open or short circuit in the shift solenoid valve No.1 and/or No.2 circuit when it changes. The ECM records DTC P0753 or P0758 if condition (a) or (b) is detected once, but it does not light up MIL. After ECM detects condition (a) or (b) continuously 8 times or more in a trip and the MIL lights up. (a) When the solenoid is energized, the solenoid resistance is 8 Ω or less and is counted. (b) When the solenoid is not energized, the solenoid resistance is 100 kΩ or more and is counted.	●Open or short in shift solenoid valve No.1/No.2 circuit ●Shift solenoid valve No.1/No.2 ●ECM

WIRING DIAGRAM

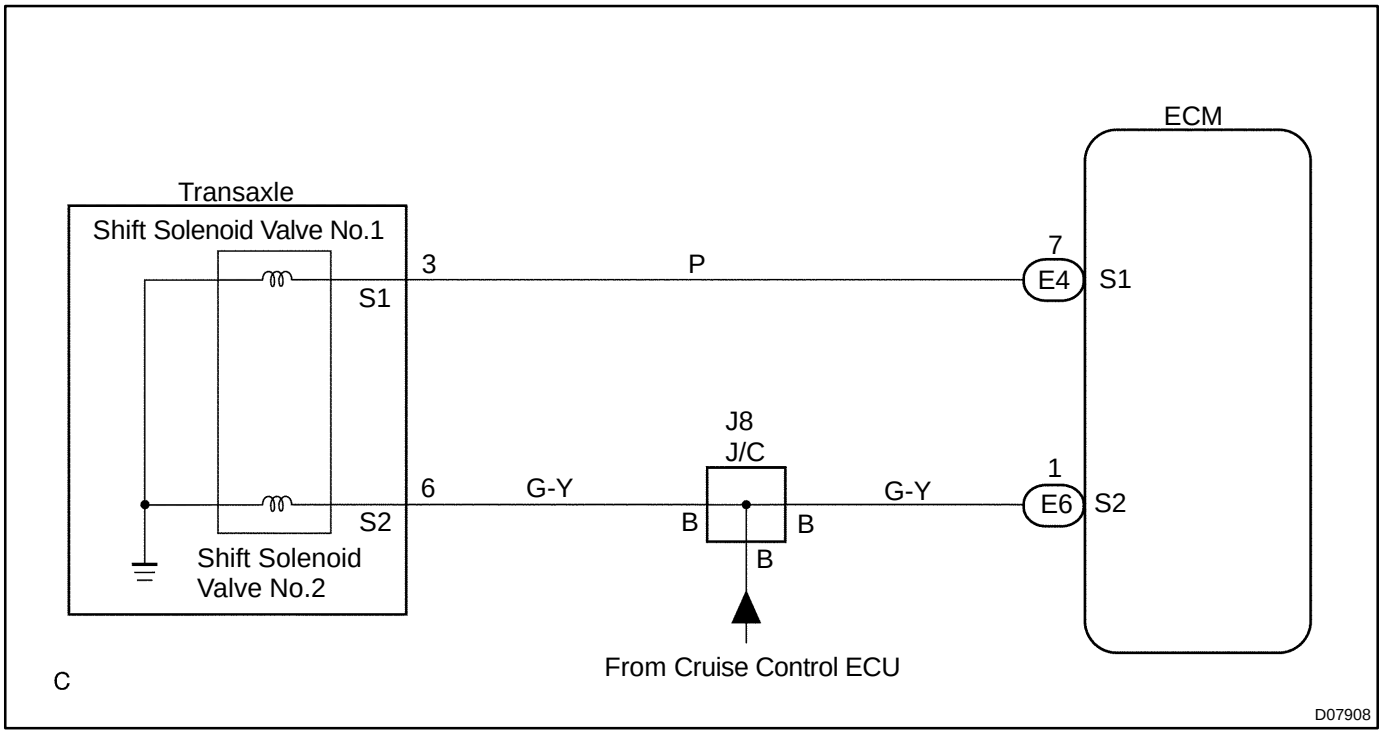

INSPECTION PROCEDURE

1	**Measure resistance between terminal S1 or S2 of ECM and body ground.**

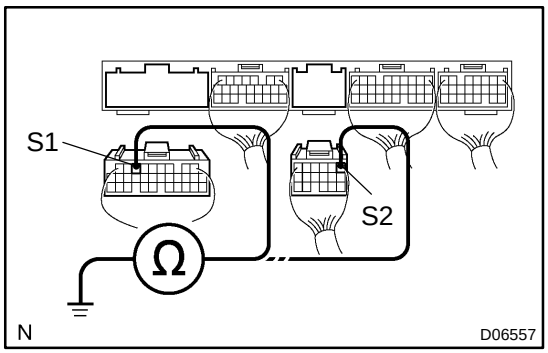

PREPARATION:

(a) Remove the glove compartment (See page BO-90).

(b) Disconnect the connector from ECM.

CHECK:

Measure resistance between terminal S1 or S2 of ECM and body ground.

OK:

Resistance: 11 - 15 Ω

OK	**Check and replace the ECM (See page IN-30).**

NG

2	**Measure resistance of harness and connector between ECM and automatic transaxle solenoid connector.**

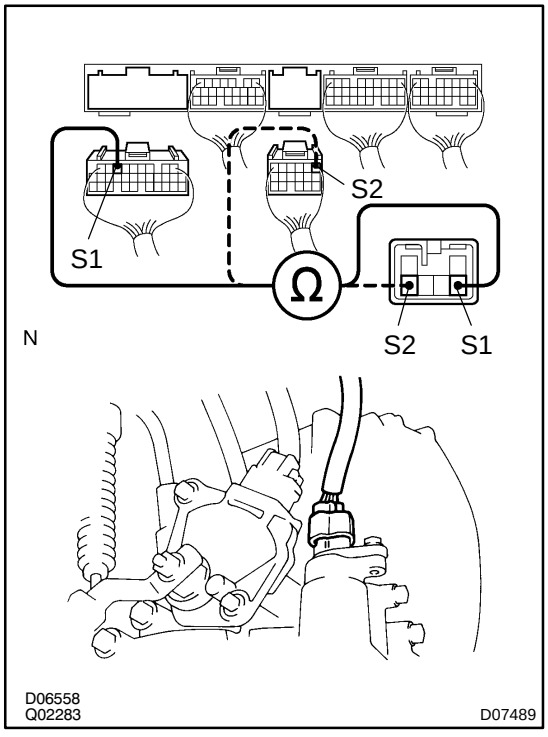

PREPARATION:

Disconnect the solenoid connector from the automatic transaxle.

CHECK:

Measure resistance of the harness and connector between terminal S1 or S2 of ECM and terminal S1 or S2 of solenoid connector.

OK:

Resistance: 0 Ω

NG	**Repair or replace the harness or connector.**

OK

3	Check shift solenoid valve No.1 or No.2.

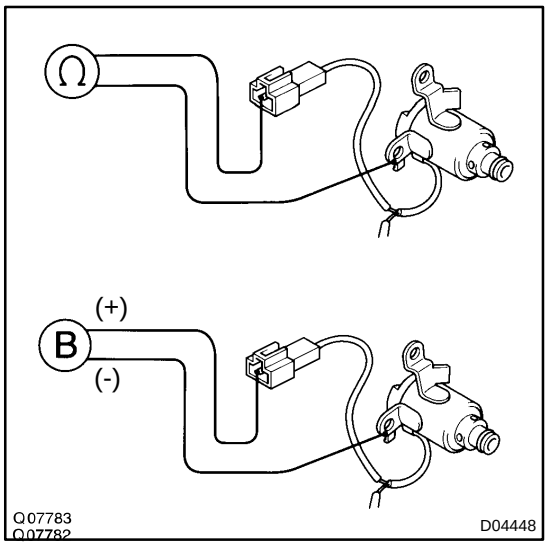

PREPARATION:

(a) Jack up the vehicle.
(b) Remove the oil pan.
(c) Disconnect the solenoid connector.
(d) Remove the shift solenoid valve No.1 or No.2.

CHECK:

(a) Measure resistance between solenoid connector and body ground.
(b) Connect the positive ≦ lead to terminal of solenoid connector, negative > lead to solenoid body.

OK:

(a) Resistance: 11 - 15 Ω
(b) The solenoid makes an operating noise.

NG → **Replace the solenoid valve.**

OK

Repair or replace the solenoid wire.

DI02M-08

DTC	P0770	Shift Solenoid E Malfunction (Shift Solenoid Valve SL)

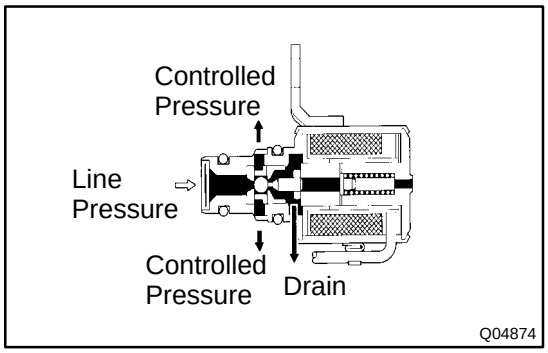

SYSTEM DESCRIPTION

The ECM uses the signals from the throttle position sensor, air-flow meter and crankshaft position sensor to monitor the engagement condition of the lock-up clutch.

Then the ECM compares the engagement condition of the lock-up clutch with the lock-up schedule in the ECM memory to detect mechanical trouble of the shift solenoid valve SL, valve body, torque converter clutch or automatic transaxle (clutch, brake or gear etc.).

DTC No.	DTC Detecting Condition	Trouble Area
P0770	●Lock-up does not occur when driving in the lock-up range (normal driving at 80 km/h [50 mph]), or lock-up remains ON in the lock-up OFF range. (2-trip detection logic) ●When lock-up is ON, clutch or brake slips or gear is broken.	●Shift solenoid valve SL is stuck open or closed ●Valve body blocked up or stuck ●Lock-up clutch ●Automatic transaxle (clutch, brake or gear etc.)

INSPECTION PROCEDURE

1	**Check solenoid valve SL operation.**

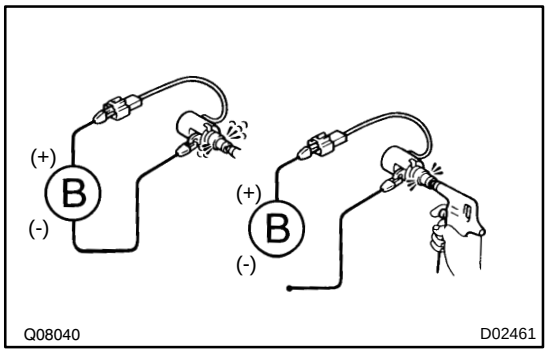

PREPARATION:

(a) Remove the oil pan.

(b) Remove the shift solenoid valve SL.

CHECK:

(a) Applying 490 kPa (5 kgf/cm^2, 71 psi) of compressed air, check that the solenoid valve does not leak air.

(b) When battery positive voltage is supplied to the shift solenoid valve, check that the solenoid valve opens.

OK:

(a) Solenoid valve does not leak air.

(b) Solenoid valve opens.

NG → **Replace the solenoid valve SL.**

OK

2	Check valve body (See page DI-175).

NG → Repair or replace the valve body.

OK

3	Check the torque converter clutch (See page AX-43).

NG → Replace the torque converter clutch.

OK

Repair the transaxle (See page AX-33).

DI02N-08

DTC	P0773	Shift Solenoid E Electrical Malfunction (Shift Solenoid Valve SL)

CIRCUIT DESCRIPTION

The shift solenoid valve SL is turned ON and OFF by signals from the ECM to control the hydraulic pressure acting on the lock-up relay valve, which then controls operation of the lock-up clutch.
Fail safe function:
If the ECM detects a malfunction, it turns the shift solenoid valve SL OFF.

DTC No.	DTC Detecting Condition	Trouble Area
P0773	Either (a) or (b) is detected for 1 time. (2-trip detection logic) (a) Solenoid resistance is 8 Ω or less short when solenoid is energized. (b) Solenoid resistance is 100 kΩ or more when solenoid is not energized.	●Open or short in shift solenoid valve SL circuit ●Shift solenoid valve SL ●ECM

WIRING DIAGRAM

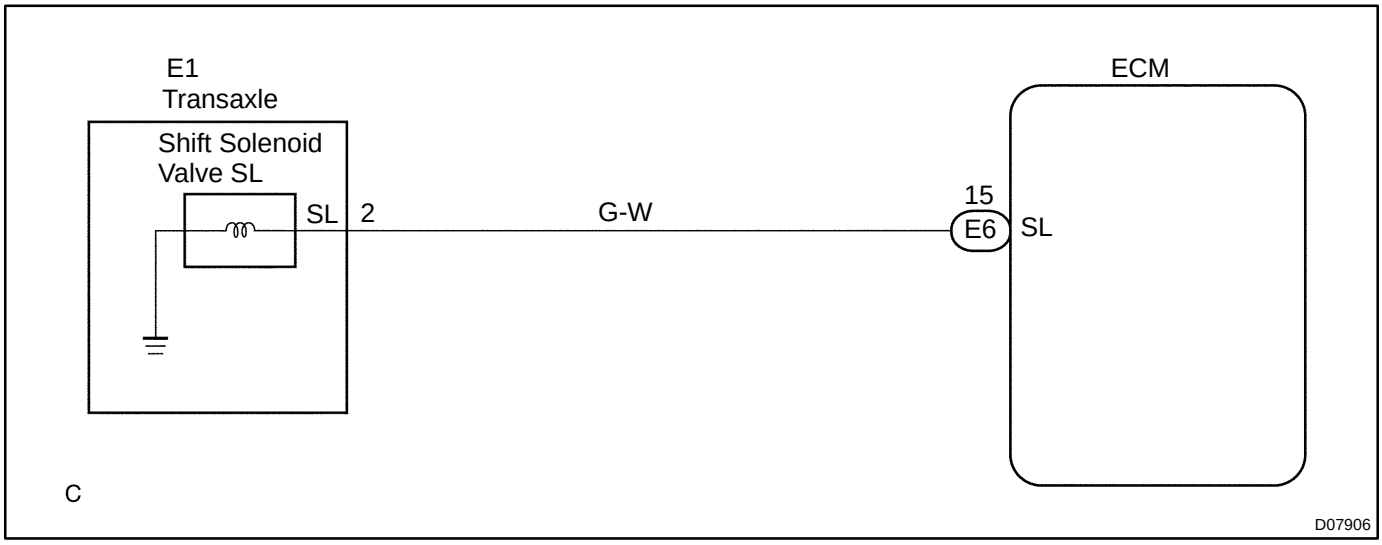

INSPECTION PROCEDURE

1	**Measure resistance between terminal SL of ECM and body ground.**

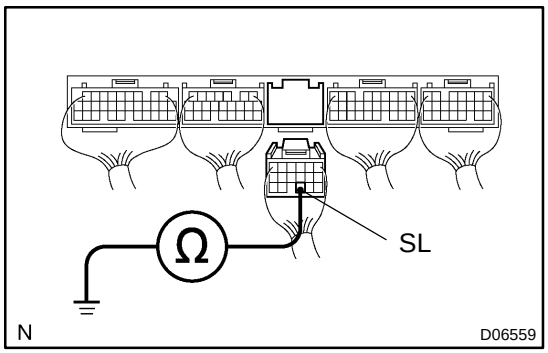

PREPARATION:

(a) Remove the glove compartment (See page BO-90).

(b) Disconnect the connector from ECM.

CHECK:

Measure resistance between terminal SL of ECM and body ground.

OK:

Resistance: 11 - 15 Ω at 20 °C (68 °F)

OK	**Check and replace the ECM (See page IN-30).**

NG

2	**Measure resistance of harness and connector between ECM and automatic transaxle solenoid connector.**

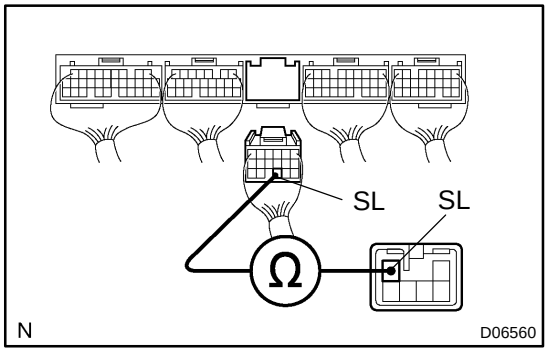

PREPARATION:

Disconnect the solenoid connector from the transaxle.

CHECK:

Measure resistance of the harness and connector between terminal SL of ECM and terminal SL of solenoid connector.

OK:

Resistance: 0 Ω

NG	**Repair or replace the harness or connector.**

OK

3	Check shift solenoid valve SL.

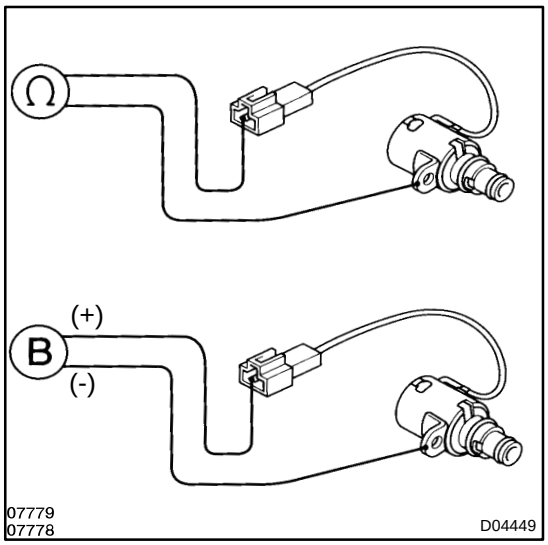

PREPARATION:

(a) Jack up the vehicle.
(b) Remove the oil pan.
(c) Disconnect the shift solenoid valve SL connector.
(d) Remove the shift solenoid valve SL.

CHECK:

(a) Measure resistance between terminal SL of shift solenoid valve and solenoid body.
(b) Connect positive ⊕ lead to terminal of solenoid connector, negative ⊖ lead to solenoid body.

OK:

(a) Resistance: 11 - 15 Ω at 20 ˚C (68 ˚F)
(b) The shift solenoid valve SL makes operation noise.

NG → **Replace the shift solenoid valve SL.**

OK

Replace or repair the solenoid wire, harness and connector between ECM and automatic transaxle solenoid connector.

DI02O-06

DTC	P1520	Stop Light Switch Signal Malfunction

CIRCUIT DESCRIPTION

The purpose of this circuit is to prevent the engine from stalling, while driving in lock-up condition, when brakes are suddenly applied.
When the brake pedal is operated, this switch sends a signal to ECM. Then the ECM cancels operation of the lock-up clutch while braking is in progress.

DTC No.	DTC Detecting Condition	Trouble Area
P1520	No stop light switch signal to ECM during driving. (2-trip detection logic)	●Open or short in stop light switch circuit ●Stop light switch ●ECM

WIRING DIAGRAM

See page DI-134 .

INSPECTION PROCEDURE

See page DI-134 .

DI02P-07

DTC	P1705	NC2 Revolution Sensor Circuit Malfunction (Direct Clutch Speed Sensor)

CIRCUIT DESCRIPTION

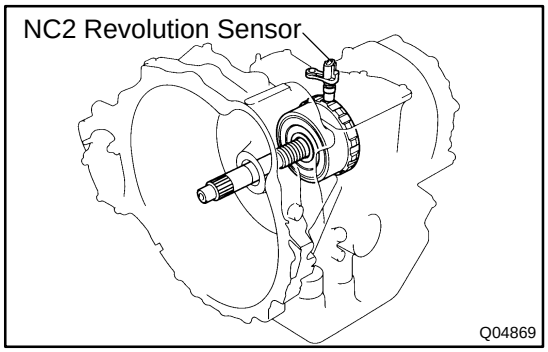

This sensor detects the rotation speed of the direct clutch drum. By comparing the direct clutch speed signal with the vehicle speed sensor signal, the ECM detects the shift timing of the gears and appropriately controls the engine torque and hydraulic pressure in response to various conditions, thus performing smooth gear shifting.

DTC No.	DTC Detecting Condition	Trouble Area
P1705	The ECM detects conditions (a), (b), (c), (d), (e) and (f) continuity for 4 secs. or more. (2-trip detection logic) (a) Gear change not being performed (b) Gear position: 1st, 2nd 3rd or O/D (c) T/M input shaft rpm: 300 rpm or less (d) T/M output shaft rpm: 1,000 rpm or more (e) Park/neutral position switch: OFF (f) Shift solenoid valves No. 1, No. 2, SL and vehicle speed sensor are in normal operation.	●Open or short in direct clutch speed sensor circuit ●Direct clutch speed sensor ●ECM

WIRING DIAGRAM

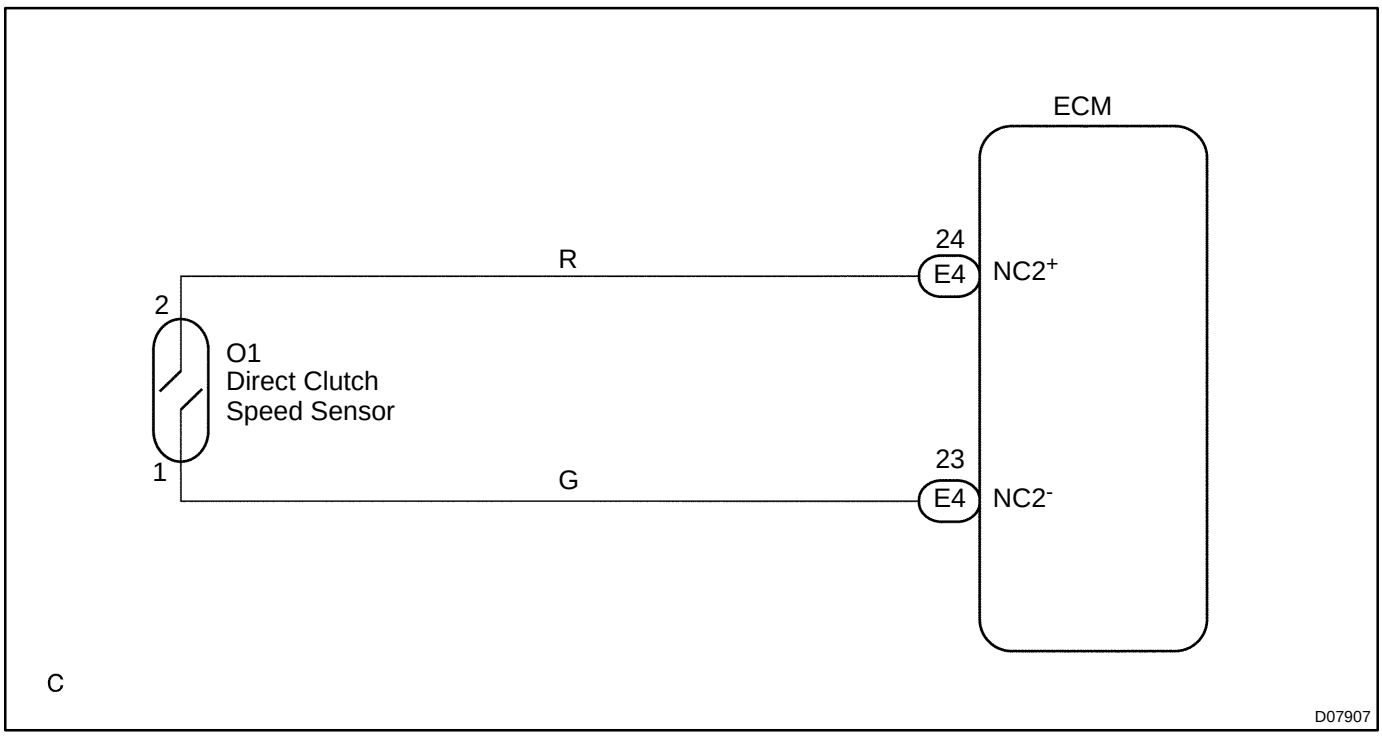

INSPECTION PROCEDURE

1	**Check resistance between terminals NC2+ and NC2- of ECM.**

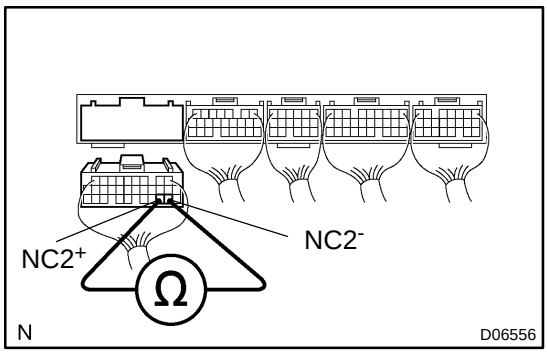

PREPARATION:
(a) Remove the glove compartment.
(b) Disconnect the connector from ECM.

CHECK:
Check resistance between terminals NC2+ and NC2- of ECM.

OK:
Resistance: 560 - 680 Ω at 20 ˚C (68 ˚F)

OK → **Check and replace the ECM (See page IN-30).**

NG

2	**Check direct clutch speed sensor.**

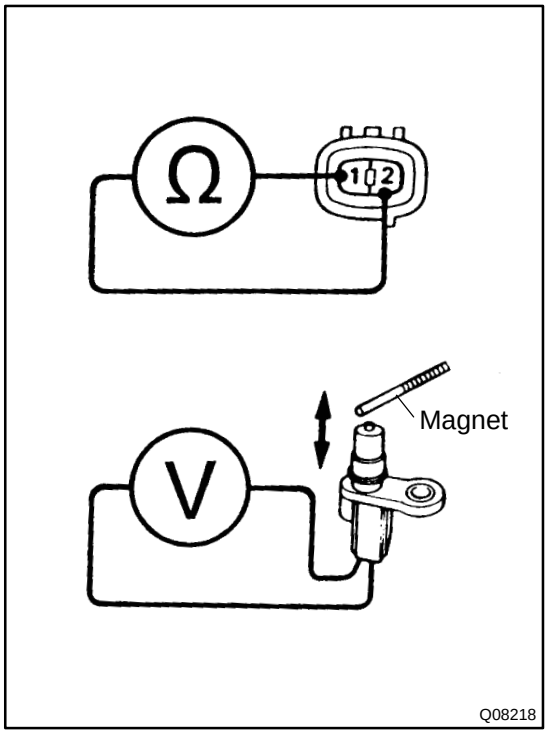

PREPARATION:
Remove the Direct clutch speed sensor from transaxle.

CHECK:
(a) Measure resistance between terminals 1 and 2 of speed sensor.
(b) Check voltage between terminals 1 and 2 of the speed sensor when a magnet is put close to the front end of the speed sensor then taken away quickly.

OK:
(a) Resistance: 560 - 680 Ω at 20 ˚C (68 ˚F)
(b) Voltage is generated intermittently.

HINT:
The voltage generated is extremely low.

NG → **Replace the direct clutch speed sensor.**

OK

Check and repair the harness and connector between ECM and direct clutch speed sensor (See page IN-30).

DI02Q-07

DTC	P1765	Linear Solenoid for Accumulator Pressure Control Circuit Malfunction (Shift Solenoid Valve SLN)

CIRCUIT DESCRIPTION

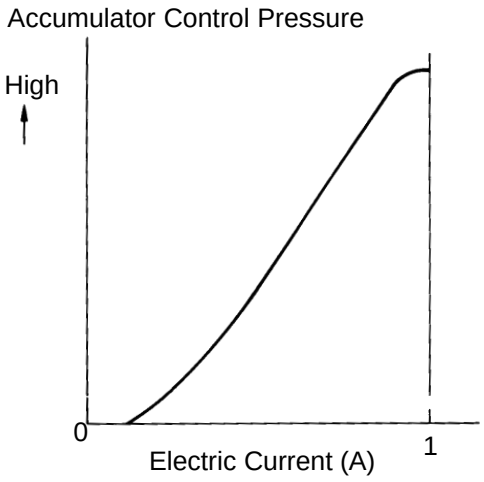

AT5608

The shift solenoid valve SLN controls the hydraulic pressure acting on the accumulator control valve when gears are shifted and performs smooth gear shifting.
The ECM determines optimum operating pressure according to the signals from the throttle position sensor, vehicle speed sensor and direct clutch speed sensor and controls the volume of current flow to the solenoid valve.
The amount of current to the solenoid is controlled by the (*) duty ratio of ECM output signals, causing a momentary change to the hydraulic pressure acting on the clutches during gear shifting.
When the duty ratio is high, the hydraulic pressure acting on the clutches is low.

(*) Duty Ratio
The duty ratio is the ratio of the period of continuity in one cycle.
For example, if A is the period of continuity in one cycle, and B is the period of non-continuity, then

$$\text{Duty Ratio} = \frac{A}{A+B} \times 100\ (\%)$$

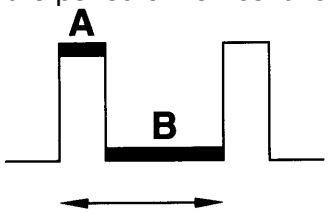

D00061 BE4056

D00060

DTC No.	DTC Detecting Condition	Trouble Area
P1765	After the engine is warmed up, the current flows to the shift solenoid valve SLN for 1 sec or more under condition (a) or (b): (a) Engine speed: 500 rpm or more (b) Park/neutral position switch: ON (P or N position)	●Open or short in shift solenoid valve SLN circuit ●Shift solenoid valve SLN ●ECM

Reference

Waveform between terminals SLN^+ and SLN^- when engine is idling.

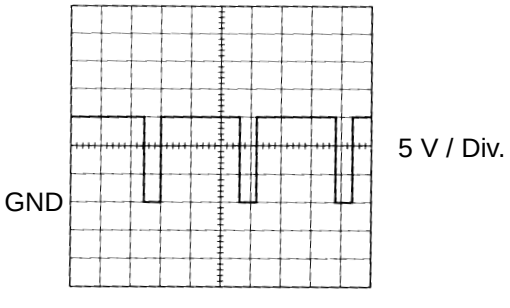

Waveform between terminals SLN^+ and SLN^- during shift change.

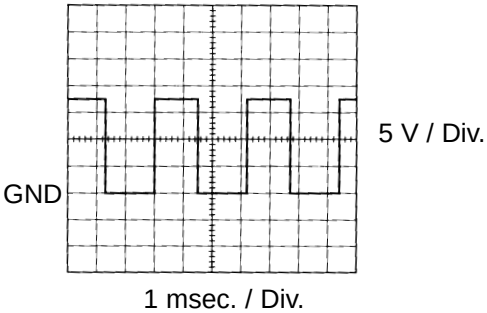

AT8764 AT8766

D00062

WIRING DIAGRAM

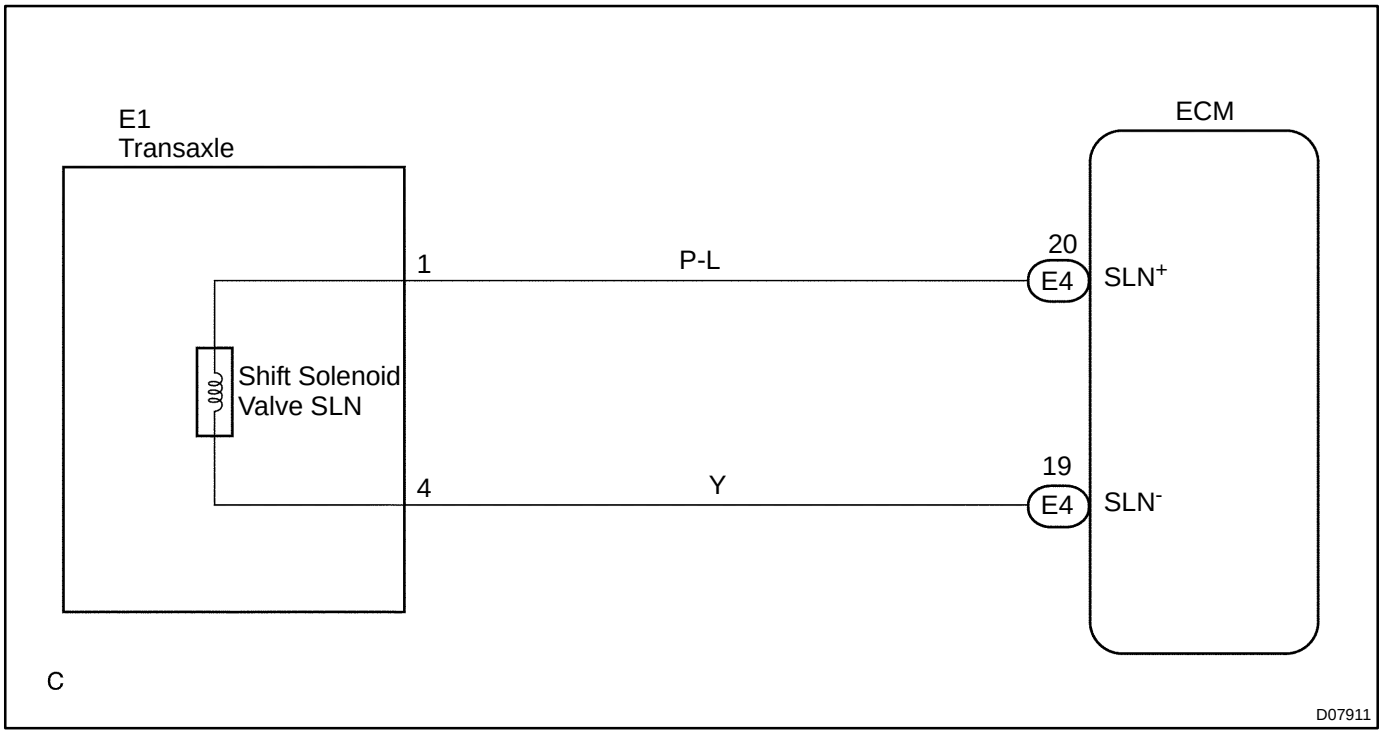

INSPECTION PROCEDURE

1	**Check shift solenoid valve SLN.**

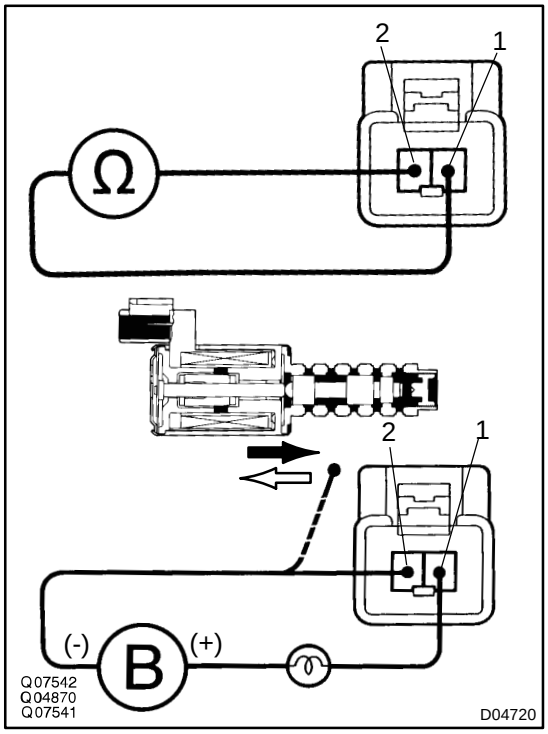

Check solenoid resistance and operation:

PREPARATION:

Disconnect the shift solenoid valve SLN connector.

CHECK:

(a) Measure resistance between terminals 1 and 2 of solenoid connector.

(b) Connect positive ⊕ lead with an 8 - 10 W bulb to terminal 1 of solenoid connector and negative ⊖ lead to terminal 2, then check the movement of the valve.

OK:

(a) Resistance: 5.1 - 5.5 Ω

(b)

When battery positive voltage is supplied.	Valve moves in direction shown in illustration. (on the left)
When battery positive voltage is cut off.	Valve moves in direction shown in illustration. (on the right)

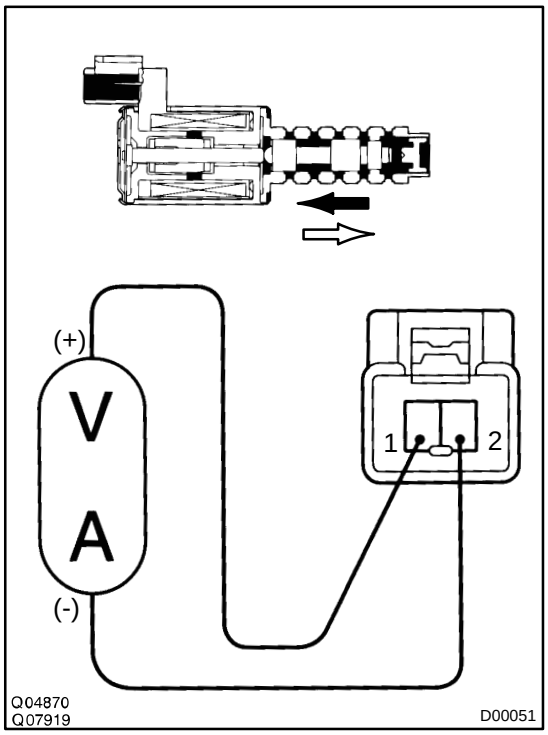

Check solenoid operation:

PREPARATION:

Connect positive ⊕ lead of the variable power supply to terminal 1 of solenoid connector and negative ⊖ lead to terminal 2.

CHECK:

(a) Check the movement of the valve when the voltage is gradually increased.
(A current greater than 1A should not be supplied.)

(b) Check the movement of the valve when the voltage is cut off.

OK:

(a) As the voltage is increased, the valve should move slowly in the ⇐ direction.

(b) The valve should return in the ⇨ direction.

NG → **Replace the shift solenoid valve SLN.**

OK

2	**Check harness and connector between battery and shift solenoid valve SLN, shift solenoid valve SLN and ECM (See page IN-30).**

NG → **Repair or replace the harness or connector.**

OK

Check and replace the ECM (See page IN-30).

DI6K8-01

DTC	P1780	Park/Neutral Position Switch Malfunction

CIRCUIT DESCRIPTION

The park/neutral position switch detects the shift lever position and sends signals to the ECM.
The ECM receives signals (NSW, R, 2 and L) from the park/neutral position switch. When the signal is not sent to the ECM from the park/neutral position switch, the ECM judges that the shift lever is in D position.

DTC No.	DTC Detection Condition	Trouble Area
P1780	When driving under conditions (a) and (b) for 30 seconds or more, the park/neutral position switch is ON (N position). (2-trip detection logic) (a) Vehicle speed: 70 km/h (44 mph) or more (b) Engine speed: 1,500 - 2,500 rpm	●Short in park/neutral position switch circuit ●Park/neutral position switch ●ECM

WIRING DIAGRAM

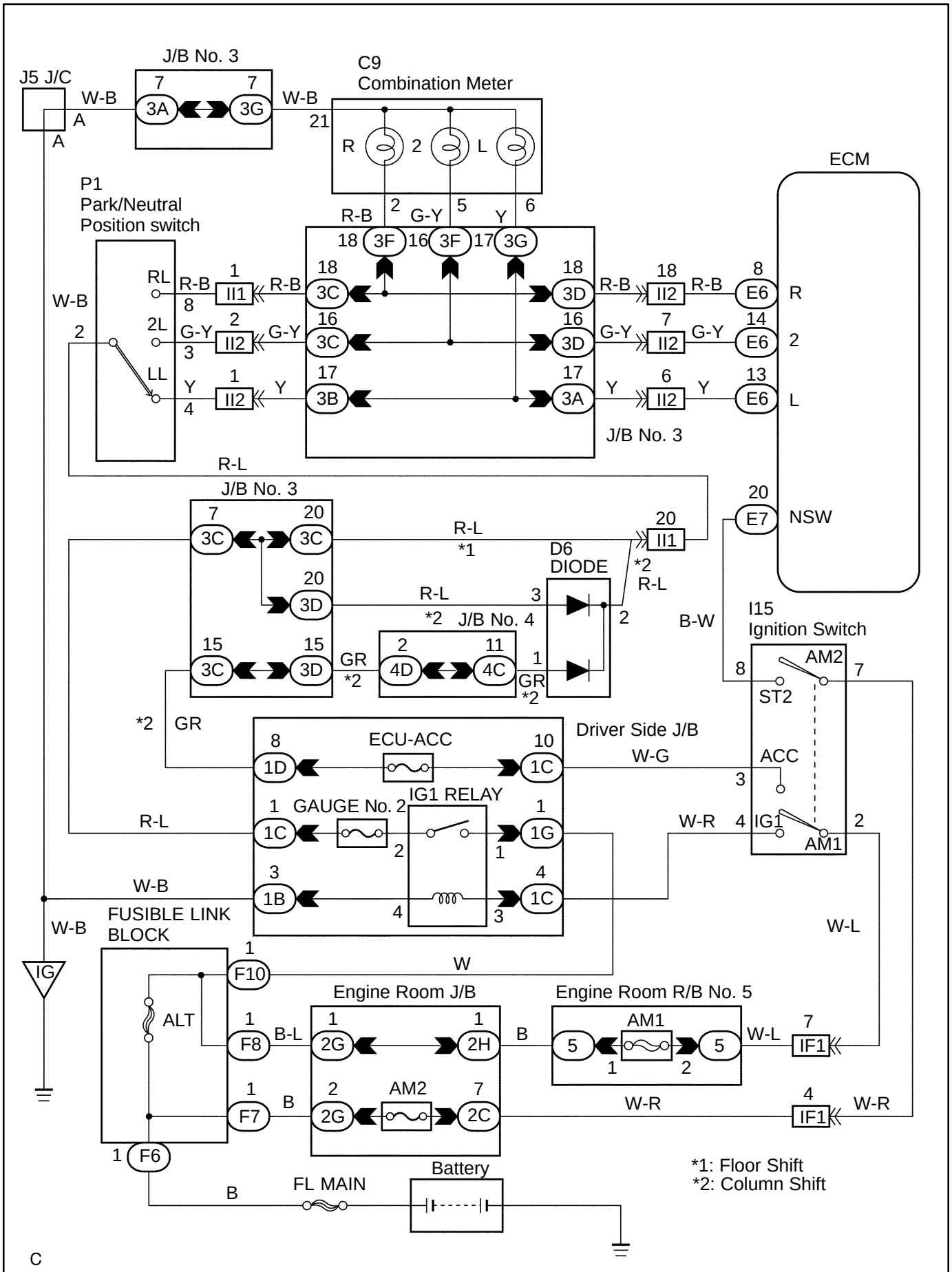

INSPECTION PROCEDURE

1	**Read PNP, REVERSE, 2ND and LOW signals.**

When using TOYOTA hand-held tester:

PREPARATION:

(a) Remove the DLC3 cover.
(b) Connect a TOYOTA hand-held tester to the DLC3.
(c) Turn the ignition switch ON and TOYOTA hand-held tester main switch ON.

CHECK:

Shift lever into the P, R, N, 2 and L positions, and read the PNP, REVERSE, 2ND and LOW signals on the TOYOTA hand-held tester.

OK:

Shift position	Signal
2	2ND OFF → ON
L	LOW OFF → ON
R	REVERSE OFF → ON
P, N	NSW OFF → ON

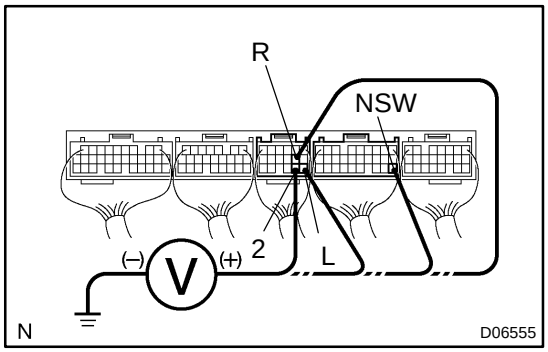

When not using TOYOTA hand-held tester:

PREPARATION:

(a) Remove the glove compartment.
(b) Turn the ignition switch ON.

CHECK:

Measure voltage between each of terminals NSW, 2, L and R of ECM and body ground when the shift lever is shifted to the following positions.

OK:

Position	NSW-Body ground	R-Body ground	2-Body ground	L-Body ground
P, N	0 V	0 V	0 V	0 V
R	9 - 14 V*	9 - 14 V*	0 V	0 V
D	9 - 14 V	0 V	0 V	0 V
2	9 - 14 V	0 V	9 - 14 V	0 V
L	9 - 14 V	0 V	0 V	9 - 14 V

HINT:

*: The voltage will drop slightly due to lighting up of the back up light.

OK → **Check and replace the ECM (See page IN-30).**

NG

2	Check park/neutral position switch.

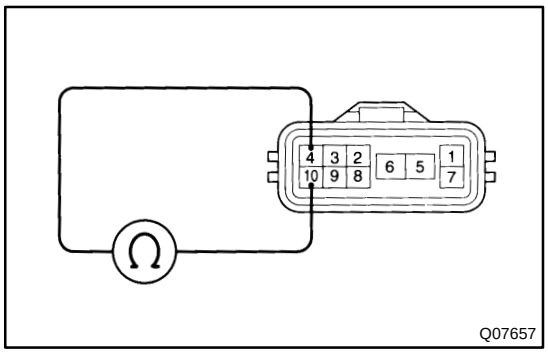

PREPARATION:

(a) Jack up the vehicle.

(b) Remove the park/neutral position switch (See page AX-4).

CHECK:

Check continuity between each terminal shown below when the shift lever is moved to each position.

Shift Position	Terminal No. to continuity	
P	2 - 7	5 - 6
R	2 - 8	-
N	2 - 9	5 - 6
D	2 - 10	-
2	2 - 3	-
L	2 - 4	-

OK:

There is continuity.

NG → **Replace the park/neutral position switch.**

OK

Repair or replace harness and connector between battery and park/neutral position switch, park/neutral position switch and ECM (See page IN-30).

NG → **Repair or replace the harness and connector.**

OK

Check and replace the ECM (See page IN-30).

DI02D-02

CUSTOMER PROBLEM ANALYSIS CHECK

Transaxle Control System Check Sheet	Inspector's Name :

Customer's Name		Registration No.	
		Registration Year	/ /
		Frame No.	
Date Vehicle Brought In	/ /	Odometer Reading	km mile

Date Problem Occurred	/ /
Frequency problem occurs	☐ Continuous ☐ Intermittent (times a day)

Symptoms	☐ Vehicle does not move (☐ Any position ☐ Particular position)
	☐ No up-shift (☐ 1st → 2nd ☐ 2nd → 3rd ☐ 3rd → O/D)
	☐ No down-shift (☐ O/D →3rd ☐ 3rd → 2nd ☐ 2nd → 1st)
	☐ Lock-up malfunction
	☐ Shift point too high or too low
	☐ Harsh engagement (☐ N → D ☐ Lock-up ☐ Any drive position)
	☐ Slip or shudder
	☐ No kick-down
	☐ Others ( )

Check Item	Malfunction Indicator Lamp	☐ Normal ☐ Remains ON

DTC Check	1st Time	☐ Normal code	☐ Malfunction code (Code)
	2nd Time	☐ Normal code	☐ Malfunction code (Code)

DI02F-06

DIAGNOSTIC TROUBLE CODE CHART

If a DTC is displayed during the DTC check, check the circuit listed for that code in the table below and proceed to the page given.

*: ● ...MIL lights up

DTC No. (See Page)	Detection Item	Trouble Area	MIL *	Memory
P0500 (DI-178)	Vehicle Speed Sensor Malfunction (Vehicle Speed Sensor)	□Open or short in vehicle speed sensor circuit □Vehicle speed sensor □Combination meter □ECM □Automatic transaxle (clutch, brake or gear etc.)	●	○
P0750 (DI-181)	Shift Solenoid A Malfunction (Shift Solenoid Valve No.1)	□Shift solenoid valve No.1 is stuck open or closed □Valve body is blocked up or stuck □Automatic transaxle (clutch, brake or gear etc.)	●	○
P0753 (DI-183)	Shift Solenoid A Electrical Malfunction (Shift Solenoid Valve No.1)	□Open or short in shift solenoid valve No.1 circuit □Shift solenoid valve No.1 □ECM	●	○
P0755 (DI-181)	Shift Solenoid B Malfunction (Shift Solenoid Valve No.2)	□Shift solenoid valve No.2 is stuck open or closed □Valve body is blocked up or stuck □Automatic transaxle (clutch, brake or gear etc.)	●	○
P0758 (DI-183)	Shift Solenoid B Electrical Malfunction (Shift Solenoid Valve No.2)	□Open or short in shift solenoid valve No.2 circuit □Shift solenoid valve No.2 □ECM	●	○
P0770 (DI-187)	Shift Solenoid E Malfunction (Shift Solenoid Valve SL)	□Shift solenoid valve SL is stuck open or closed □Valve body is blocked up or stuck □Lock-up clutch □Automatic transaxle (clutch, brake or gear etc.)	●	○
P0773 (DI-189)	Shift Solenoid E Electrical Malfunction (Shift Solenoid Valve SL)	□Open or short in shift solenoid valve SL circuit □Shift solenoid valve SL □ECM	●	○
P1520 (DI-192)	Stop Light Switch Signal Malfunction	□Open or short in stop light switch circuit □Stop light switch □ECM	●	○
P1705 (DI-193)	NC2 Revolution Sensor Circuit Malfunction (Direct Clutch Speed Sensor)	□Open or short in direct clutch speed sensor circuit □Direct clutch speed sensor □ECM	●	○
P1765 (DI-195)	Linear Solenoid for Accumulator Pressure Control Circuit Malfunction (Shift Solenoid Valve SLN)	□Open or short in shift solenoid valve SLN circuit □Shift solenoid valve SLN □ECM	●	○
P1780 (DI-199)	Park/Neutral Position Switch Malfunction	□Short in park/neutral position switch circuit □Park/neutral position switch □ECM	●	○

AUTOMATIC TRANSAXLE

DI02C-06

HOW TO PROCEED WITH TROUBLESHOOTING

Items inside ▱ are titles of pages in this manual, with the page number indicated in the bottom portion. See the indicated pages for detailed explanations.

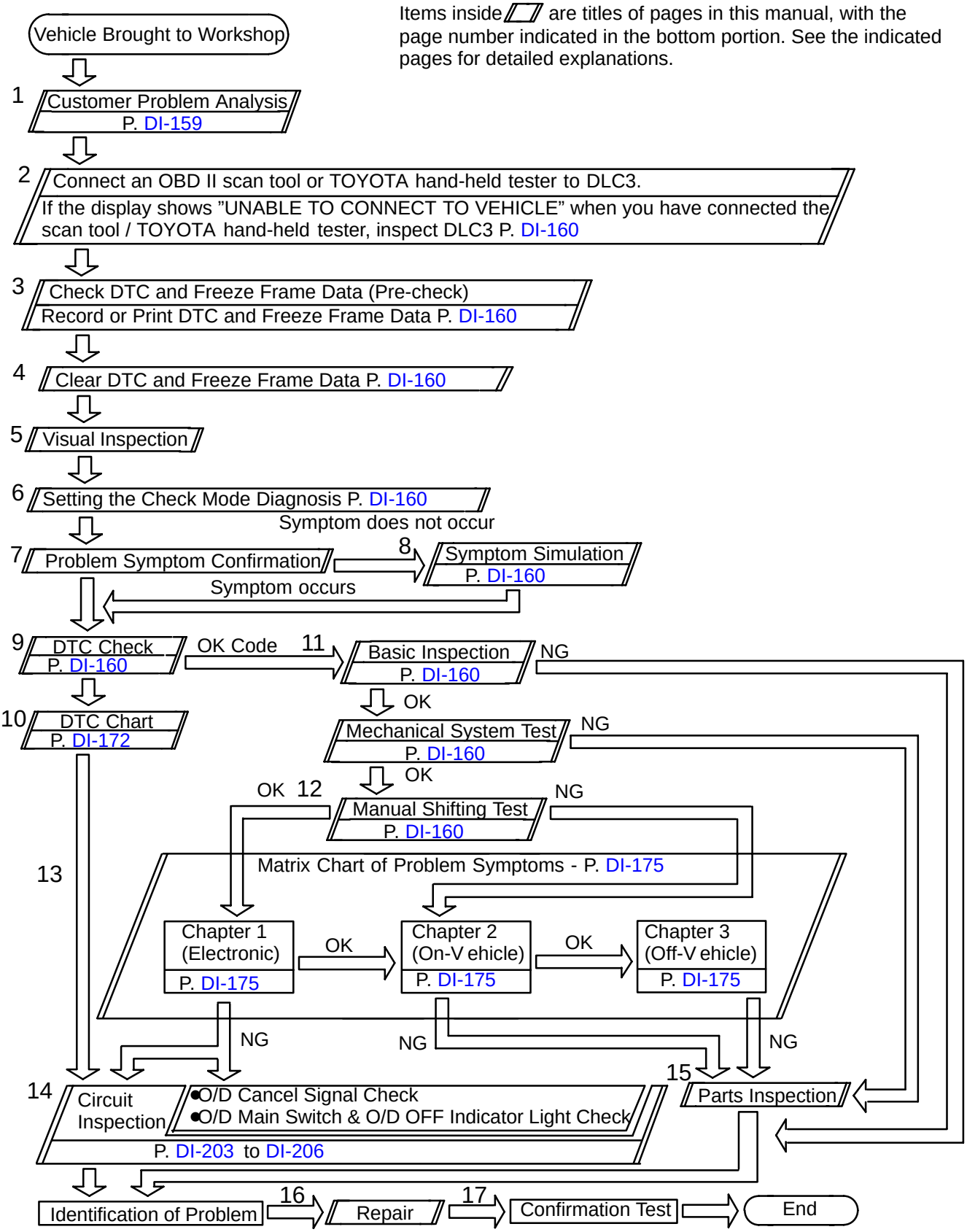

DI02G-06

PARTS LOCATION

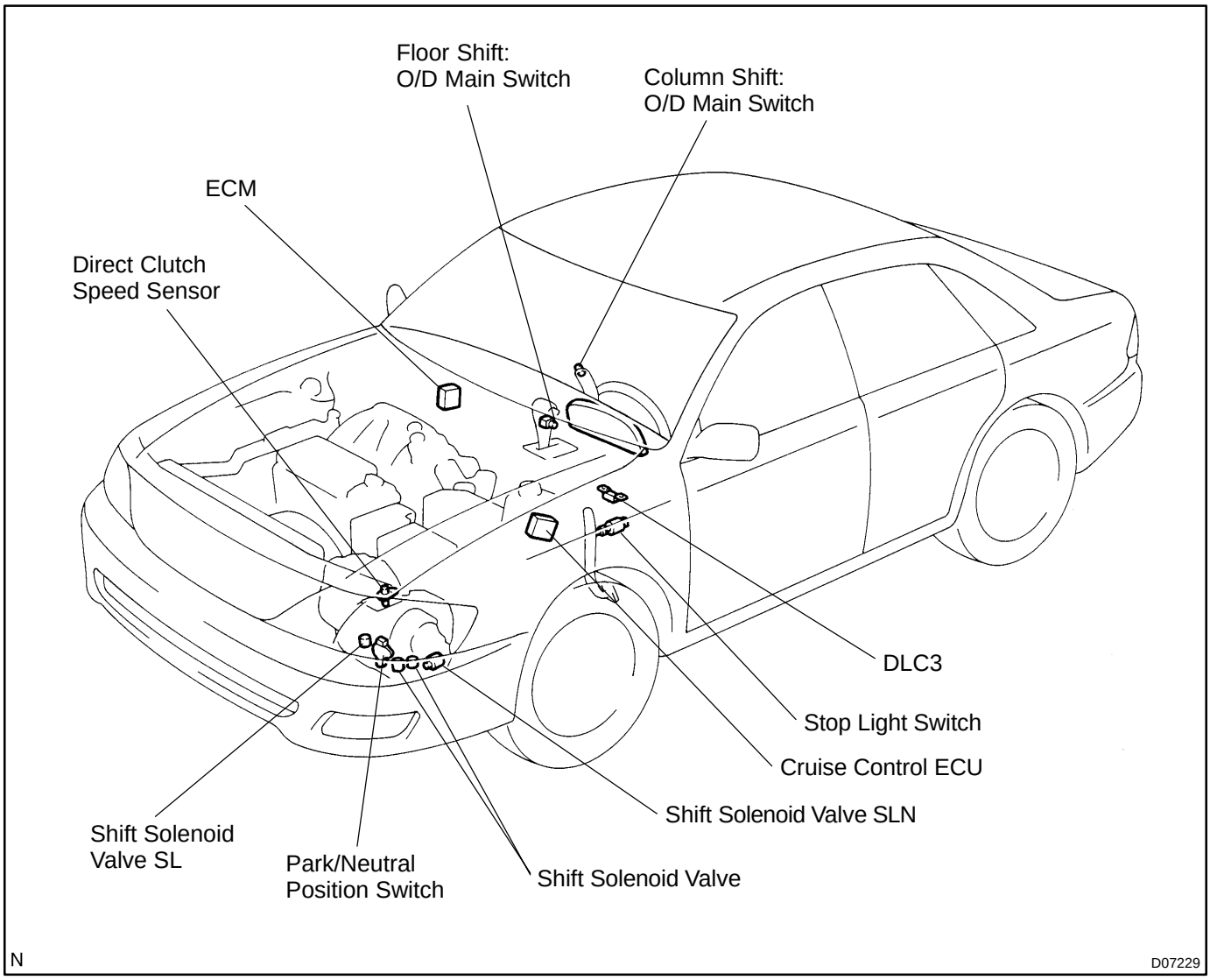

DI02E-08

PRE-CHECK

1. DIAGNOSIS SYSTEM

(a) Description

- When troubleshooting OBD II vehicles, the only difference from the usual troubleshooting procedure is that you connect to the vehicle an OBD II scan tool complying with SAE J1987 or TOYOTA hand-held tester, and read off various data output from the vehicle's ECM.

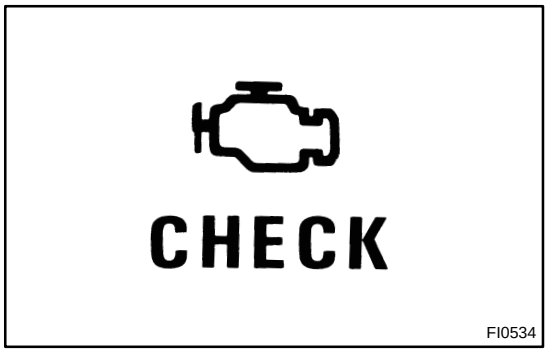

- OBD II regulations require that the vehicle's on-board computer lights up the Malfunction Indicator Lamp (MIL) on the instrument panel when the computer detects a malfunction in the computer itself or in drive system components which affect vehicle emissions. In addition to the MIL lighting up when a malfunction is detected, the applicable DTCs prescribed by SAE J2012 are recorded in the ECM memory (See page DI-14).
  If the malfunction only occurs in 3-trip, the MIL goes off but the DTCs remain recorded in the ECM memory.

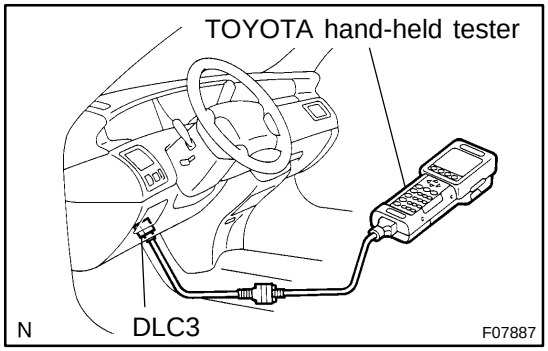

- To check the DTCs, connect an OBD II scan tool or TOYOTA hand-held tester to DLC3 on the vehicle. The OBD II scan tool or TOYOTA hand-held tester also enables you to erase the DTCs and check freeze frame data and various forms of engine data (For instruction book).
- DTCs include SAE controlled codes and Manufacturer controlled codes.
  SAE controlled codes must be set as prescribed by the SAE, while Manufacturer controlled codes can be set freely by the manufacturer within the prescribed limits (See DTC chart on page).

- The diagnosis system operates in normal mode during normal vehicle use, and also has a check mode for technicians to simulate malfunction symptoms and perform troubleshooting. Most DTCs use 2-trip detection logic(*) to prevent erroneous detection. By switching the ECM to check mode when troubleshooting, the technician can cause the MIL to light up and for a malfunction that is only detected once or momentarily (TOYOTA hand-held tester) (See page DI-160).
- *2-trip detection logic:
  When a logic malfunction is first detected, the malfunction is temporarily stored in the ECM memory. If the same malfunction is detected again during the 2nd test drive, this 2nd detection causes the MIL to light up.

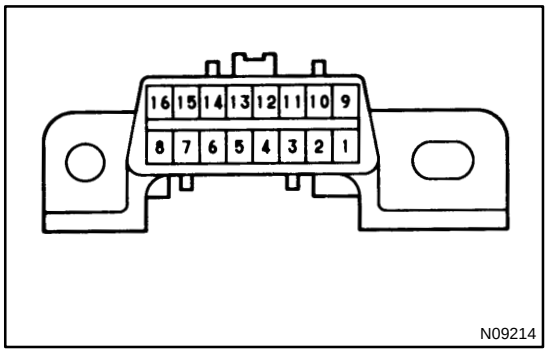

(b) Inspect the DLC3.
The vehicle's ECM uses ISO 9141-2 for communication. The terminal arrangement of DLC3 complies with SAE J1962 and matches the ISO 9141-2 format.

Tester connection	Condition	Specified condition
7 (Bus ≦ Line) - 5 (Signal ground)	During communication	Pulse generation
4 (Chassis Ground) - Body	Always	1 Ω or less
5 (Signal Ground) - Body	Always	1 Ω or less
16 (B+) - Body	Always	9 - 14 V

HINT:
If your display shows "UNABLE TO CONNECT TO VEHICLE" when you have connected the cable of OBD II scan tool or TOYOTA hand-held tester to DLC3, turned the ignition switch ON and operated the scan tool, there is a problem on the vehicle side or tool side.

- If communication is normal when the tool is connected to another vehicle, inspect DLC3 on the original vehicle.
- If communication is still not possible when the tool is connected to another vehicle, the problem is probably in the tool itself, so consult the Service Department listed in the tool's instruction manual.

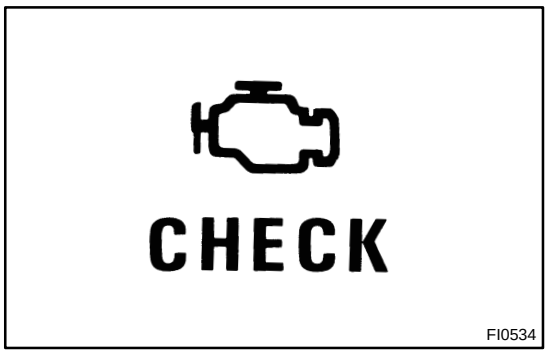

2. INSPECT DIAGNOSIS (NORMAL MODE)

(a) Check the MIL.

(1) The MIL comes on when the ignition switch is turned ON and the engine is not running.

HINT:

If the MIL does not light up, troubleshoot the combination meter (See page BE-2).

(2) When the engine is started, the MIL should go off. If the lamp remains on, the diagnosis system has detected a malfunction or abnormality in the system.

(b) Check the DTC.

NOTICE:

TOYOTA hand-held tester only:

When the diagnostic system is switched from normal mode to check mode, it erases all DTCs and freeze frame data recorded in normal mode. So before switching modes, always check the DTCs and freeze frame data, and note them down.

(1) Prepare an OBD II scan tool (complying with SAE J1978) or TOYOTA hand-held tester.

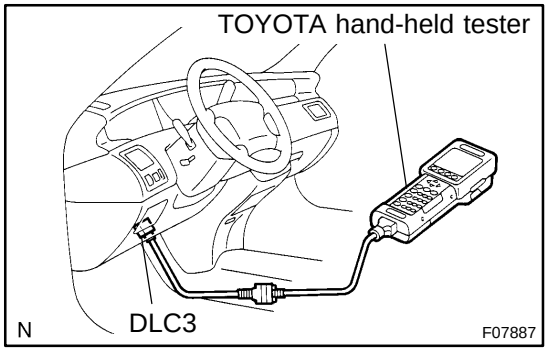

(2) Connect the OBD II scan tool or TOYOTA hand-held tester to DLC3 at the lower of the instrument panel.

(3) Turn the ignition switch ON and turn the OBD II scan tool or TOYOTA hand-held tester switch ON.

(4) Use the OBD II scan tool or TOYOTA hand-held tester to check the DTCs and freeze frame data and note them down (For operating instructions, see the OBD II scan tool's instruction book).

(5) See page DI-172 to confirm the details of the DTCs.

NOTICE:

When simulating symptoms with an OBD II scan tool (excluding TOYOTA hand-held tester) to check the DTCs, use normal mode. For codes on the DTCs chart subject to "2-trip detection logic", turn the ignition switch OFF after the symptoms have been simulated the 1st time. Then repeat the simulation process again. When the program has DTCs they are recorded in the ECM.

3. INSPECT DIAGNOSIS (CHECK MODE)

HINT:

TOYOTA hand- held tester only: Compared to the normal mode, the check mode has high sensing ability to detect malfunctions. Furthermore, the same diagnostic items which are detected in Normal mode can also be detected in Check mode.

(a) Check the DTC.

(1) Check the initial conditions.

- Battery positive voltage 11 V or more
- Throttle valve fully closed
- Transaxle in P position
- Air conditioning switched OFF

(2) Turn the ignition switch OFF

(3) Prepare a TOYOTA hand-held tester

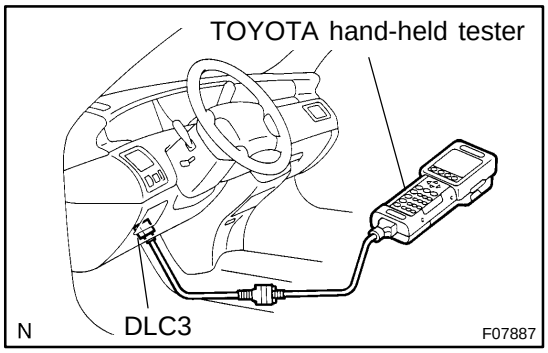

(4) Connect the TOYOTA hand-held tester to DLC3 at the lower of the instrument panel.

(5) Turn the ignition switch ON and switch the TOYOTA hand-held tester ON.

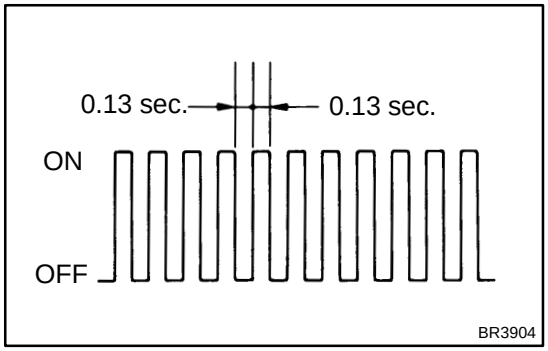

(6) Switch the TOYOTA hand-held tester from Normal mode to Check mode (Check that the MIL flashes).

(7) Start the engine (MIL goes out after the engine starts).

(8) Simulate the conditions of the malfunction described by the customer.

NOTICE:

Leave the ignition switch ON until you have checked the DTCs, etc..

(9) After simulating the malfunction conditions, use the TOYOTA hand-held tester diagnosis selector to check the DTCs and freeze frame data, etc.

HINT:

Take care not to turn the ignition switch OFF, as turning it off switches the diagnosis system from Check mode to Normal mode, so all DTCs, etc. are erased.

(10) After checking the DTC, inspect the applicable circuit.

(b) Clearance the DTC.
The following operation will erase the DTC and freeze frame data. Operating an OBD II scan tool (complying with SAE J1978) or TOYOTA hand-held tester to erase the codes (See the OBD II scan tool's instruction book for operating instructions.).

4. ROAD TEST

NOTICE:

Perform the test at normal operating ATF temperature 50 - 80 °C (122 - 176 °F).

(a) D position test
Shift into the D position and fully depress the accelerator pedal and check the following points:

(1) Check up-shift operation.
Check to see that 1 → 2, 2 → 3 and 3 → O/D up-shift takes place,and that the shift points conform the automatic shift schedule (See page SS-24).

HINT:

- O/D Gear Up-shift Prohibition Control (1. Coolant temp. is 60 °C (140 °F) or less. 2. If there is a 10 km/h (6 mph) difference between the set cruise control speed and vehicle speed.)
- O/D Gear Lock-up Prohibition Control (1. Brake pedal is depressed. 2. Coolant temp. is 60 °C (140 °F) or less.)

(2) Check for shift shock and slip.
Check for shock and slip at the 1 → 2, 2 → 3 and 3 → O/D up-shifts.

(3) Check for abnormal noises and vibration.
Run at the D position lock-up or O/D gear and check for abnormal noises and vibration.

HINT:

The check for the cause of abnormal noises and vibration must be done very thoroughly as it could also be due to loss of balance in the differential torque converter clutch, etc.

(4) Check kick-down operation.
While running in the D position, 2nd, 3rd and O/D gears, check to see that the possible kick-down vehicle speed limits for 2 → 1, 3 → 2 and O/D → 3 kick-downs conform to those indicated in the automatic shift schedule (See page SS-24).

(5) Check abnormal shock and slip at kick-down.

(6) Check the lock-up mechanism.

- Drive in D position, O/D gear, at a steady speed (lock-up ON) of about 60 km/h (37 mph).
- Lightly depress the accelerator pedal and check that the engine speed does not change abruptly.

If there is a big jump in engine speed, there is no lock-up.

(b) 2 position test
Shift into the 2 position and fully depress the accelerator pedal and check the following points:

(1) Check up-shift operation.
Check to see that the 1 → 2 up-shift takes place and that the shift point conforms to the automatic shift schedule (See page SS-24).

HINT:

There is no O/D up-shift and lock-up in the 2 position.

(2) Check engine braking.
While running in the 2 position and 2nd gear, release the accelerator pedal and check the engine braking effect.

(3) Check for abnormal noises during acceleration and deceleration, and for shock at up-shift and down-shift.

(c) L position test
Shift into the 2 position and fully depress the accelerator pedal and check the following points:
(1) Check no up-shift.
While running in the L position, check that there is no up-shift to 2nd gear.
(2) Check engine braking.
While running in the L position, release the accelerator pedal and check the engine braking effect.
(3) Check for abnormal noises during acceleration and deceleration.

(d) R position test
Shift into the R position and fully depress the accelerator pedal and check for slipping.

CAUTION:
Before conducting this test ensure that the test area is free from people and obstruction.

(e) P position test
Stop the vehicle on a grade (more than 5˚) and after shifting into the P position, release the parking brake. Then, check to see that the parking lock pawl holds the vehicle in place.

5. BASIC INSPECTION

(a) Check the fluid level.

HINT:

- Drive the vehicle so that the engine and transaxle are at normal operating temperature.
Fluid temp.: 70 - 80 ˚C (158 - 176 ˚F)
- Only use the COOL range on the dipstick as a rough reference when the fluid is replaced or the engine does not run.

(1) Park the vehicle on a level surface and set the parking brake.
(2) With the engine idling and the brake pedal depressed, shift the shift lever into all positions from P to L position and return to P position.

Column Shift:

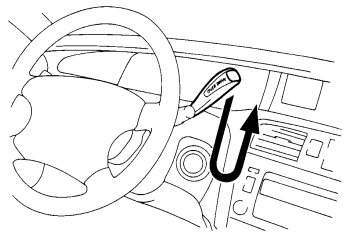

Floor Shift:

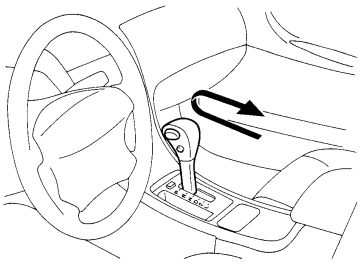

D07227
D07228
D07756

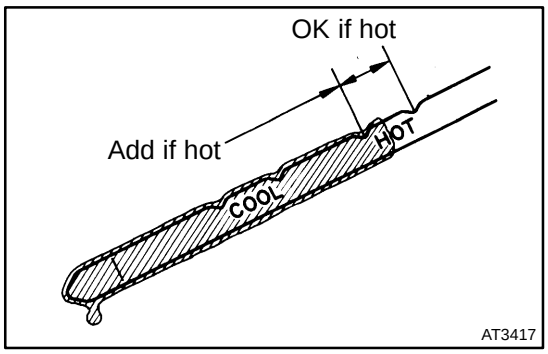

(3) Pull out the dipstick and wipe it clean.
(4) Push it back fully into the pipe.
(5) Pull it out and check that the fluid level is in the HOT range.

If the level is not within the range, add new fluid.

Fluid type: ATF D-II or DEXRON®III (DEXRON®II)

NOTICE:

- **Do not overfill.**
- **After filling ATF, check the oil level securely then drive a vehicle.**

(b) Check the fluid condition.

If the fluid smells burnt or is black, replace it.

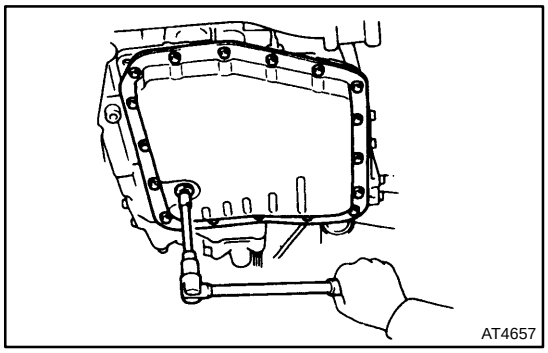

(c) Replace the ATF.
(1) Remove the drain plug and drain the fluid.
(2) Reinstall the drain plug securely.

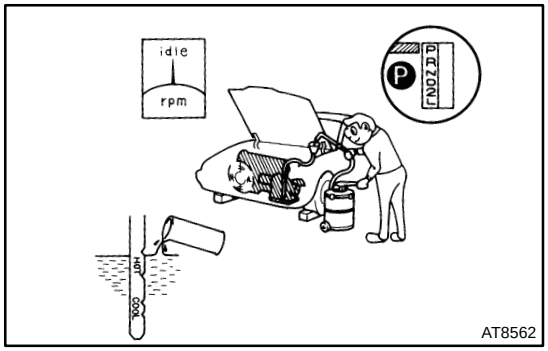

(3) With the engine OFF add new fluid through the oil filler pipe.

Fluid type: ATF D-II or DEXRON®III (DEXRON®II)

Capacity: 4.75 liters (5.0 US qts, 4.2 Imp. qts)

(4) Start the engine and shift the shift lever into all positions from P to L position and then shift into P position.

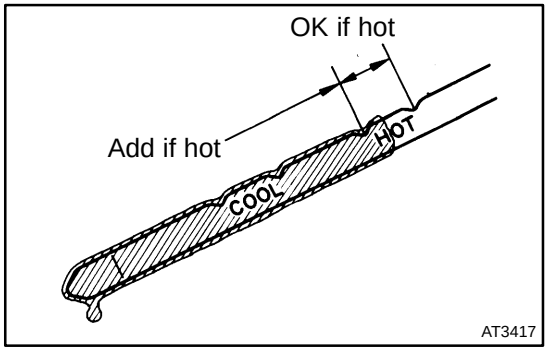

(5) With the engine idling, check the fluid level. Add fluid up to the COOL level on the dipstick.
(6) Check the fluid level at the normal operating temperature, 70 - 80 °C (158 - 176 °F), and add as necessary.

NOTICE:

Do not overfill.

(d) Check the fluid leaks.
Check for leaks in the transaxle.

If there are leaks, it is necessary to repair or replace O-rings, gasket, oil seals, plugs or other parts.

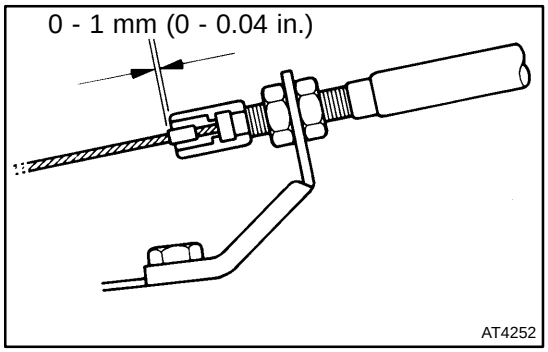

(e) Inspect and adjust the throttle cable.
(1) Check that the accelerator pedal is fully released.
(2) Check that the inner cable is not slack.
(3) Measure the distance between the outer cable end and stopper on the cable.
Standard distance: 0 - 1 mm (0 - 0.04 in.)

If the distance is not the standard, adjust the cable by adjusting nuts.

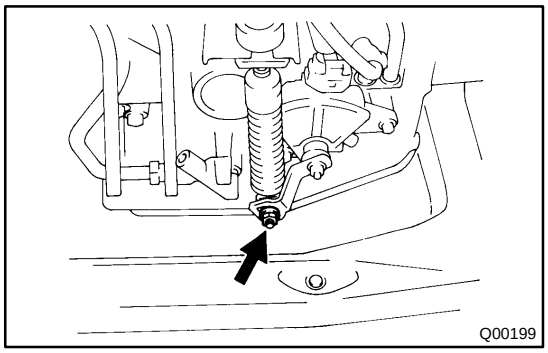

(f) Inspect and adjust the shift lever position.
When shifting the shift lever from the N position to other positions, check that the lever can be shifted smoothly and accurately to each position and that the position indicator is aligned with the correct position.

If the indicator is not aligned with the correct position, carry out the following adjustment procedures.
(1) Loosen the nut on the shift lever.

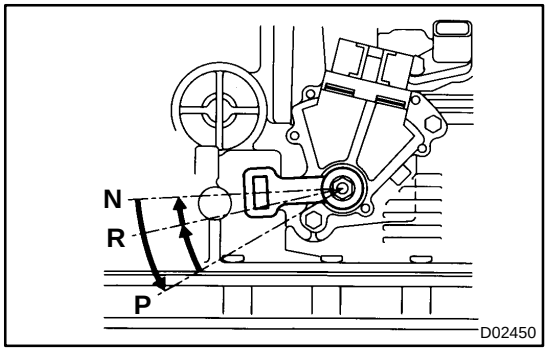

(2) Push the control shaft fully downward.
(3) Return the control shaft lever 2 notches to N position.
(4) Set the shift lever to N position.
(5) While holding the shift lever lightly toward the R position side, tighten the shift lever nut.
Torque: 13 N·m (130 kgf·cm, 9 ft·lbf)
(6) Start the engine and make sure that the vehicle moves forward when shifting the lever from the N to D position and reverses when shifting it to the R position.

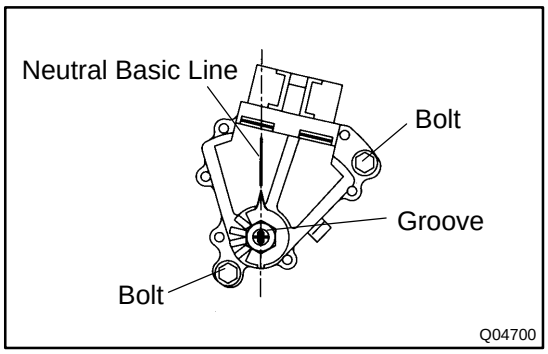

(g) Inspect and adjust the park/neutral position.
Check that the engine can be started with the shift lever only in the N or P position, but not in other positions.

If it is not as stated above, carry out the following adjustment procedures.

(1) Loosen the park/neutral position switch bolt and set the shift lever to the N position.
(2) Align the groove and neutral basic line.
(3) Hold in position and tighten the bolt.

Torque: 5.4 N·m (55 kgf·cm, 48 in·lbf)

For continuity inspection of the park/neutral position switch, see page DI-199 .

(h) Check the idle speed.

Idle speed: 700 ± 50 rpm
(In N position and air conditioner OFF)

6. MECHANICAL SYSTEM TESTS

(a) Measure the stall speed.
The object of this test is to check the overall performance of the transaxle and engine by measuring the stall speeds in the D and R positions.

NOTICE:

- **Do the test at normal operating fluid temperature 50 - 80 ˚C (122 - 176 ˚F).**
- **Do not continuously run this test longer than 5 seconds.**
- **To ensure safety, conduct this test in a wide, clear level area which provides good traction.**
- **The stall test should always be carried out in pairs. One technician should observe the conditions of wheels or wheel stoppers outside the vehicle while the other is doing the test.**

(1) Chock the 4 wheels.
(2) Connect an OBD II scan tool or TOYOTA hand-held tester to DLC3.
(3) Fully apply the parking brake.
(4) Keep your left foot pressing firmly on the brake pedal.
(5) Start the engine.
(6) Shift into the D position. Press all the way down on the accelerator pedal with your right foot. Quickly read the stall speed at this time.

Stall speed: 2,325 – 2,775 rpm

(7) Do the same test in R position.

Stall speed: 2,325 – 2,775 rpm

Evaluation:

Problem	Possible cause
(a) Stall speed low in D and R positions	●Engine output may be insufficient ●Stator one-way clutch is operating properly HINT: If more than 600 rpm below the specified value, the torque converter clutch could be faulty.
(b) Stall speed high in D position	●Line pressure too low ●Forward clutch slipping ●No.2 one-way clutch not operating properly ●O/D clutch slipping

(c) Stall speed high in R position	●Line pressure too low ●Direct clutch slipping ●1st & reverse brake slipping ●O/D clutch slipping
(d) Stall speed high in D and R positions	●Line pressure too low ●Improper fluid level ●O/D one-way clutch not operating properly

(b) Measure the time lag.

When the shift lever is shifted while the engine is idling, there will be a certain time lapse or lag before the shock can be felt. This is used for checking the conditions of the O/D direct clutch, forward clutch, and 1st & reverse brake.

NOTICE:

- **Do the test at normal operating fluid temperature 50 - 80 ˚C (122 - 176 ˚F).**
- **Be sure to allow 1 minute interval between tests.**
- **Take 3 measurements and take the average value.**

(1) Connect an OBD II scan tool or TOYOTA hand-held tester to DLC3.

(2) Fully apply the parking brake.

(3) Start the engine and check idle speed.

Idle speed: 700 ± 50 rpm (In N position and air conditioner OFF)

(4) Shift the shift lever from N to D position. Using a stop watch, measure the time from when the lever is shifted until the shock is felt.

Time lag: N → D Less than 1.2 seconds

In the same manner, measure the time lag for N → R.

Time lag: N → R Less than 1.5 seconds

Evaluation (If N → D time or N → R time lag is longer than the specified):

Problem	Possible cause
N → D time lag is longer	●Line pressure too low ●Forward clutch worn ●O/D one-way clutch not operating
N → R time lag is longer	●Line pressure too low ●Direct clutch worn ●1st & reverse brake worn ●O/D one-way clutch not operating properly

7. HYDRAULIC TEST

Measure the line pressure.

NOTICE:

- **Do the test at normal operation fluid temperature 50 - 80 ˚C (122 - 176 ˚F).**
- **The line pressure test should always be carried out in pairs. One technician should observe the conditions of wheels or wheel stoppers outside the vehicle while the other is doing the test.**
- **Be careful to prevent SST's hose from interfering with the exhaust pipe.**

(1) Warm up the ATF.

(2) Remove the test plug on the transaxle case front left side and connect SST (See page AX-33 for the location to connect SST).

SST 09992-00095 (09992-00231, 09992-00271)

(3) Fully apply the parking brake and chock the 4 wheels.

(4) Connect an OBD II scan tool or TOYOTA hand-held tester to DLC3.

(5) Start the engine and check idling speed.

(6) Keep your left foot pressing firmly on the brake pedal and shift into D position.

(7) Measure the line pressure when the engine is idling.

(8) Depress the accelerator pedal all the way down. Quickly read the highest line pressure when engine speed reaches stall speed.

(9) In the same manner, do the test in R position.

Specified line pressure:

Condition	D position kPa (kgf/cm^2, psi)	R position kPa (kgf/cm^2, psi)
Idling	401 - 461 (4.1 - 4.7, 58 - 66)	804 - 882 (8.2 - 9.0, 117 - 128)
Stall	1,138 - 1,236 (11.6 - 12.6, 165 - 179)	1,716 - 1,854 (17.5 - 18.9, 249 - 269)

If the measured pressure is not up to the specified value, recheck the throttle cable adjustment and retest.

Evaluation:

Problem	Possible cause
If the measured values at all positions are higher	●Throttle cable out of adjustment ●Throttle valve defective ●Regulator valve defective
If the measured values at all positions are lower	●Throttle cable out of adjustment ●Throttle valve defective ●Regulator valve defective ●Oil pump defective ●O/D direct clutch defective
If pressure is low in the D position only	●D position circuit fluid leakage ●Forward clutch defective
If pressure is low in the R position only	●R position circuit fluid leakage ●Direct clutch defective ●1st & reverse brake defective

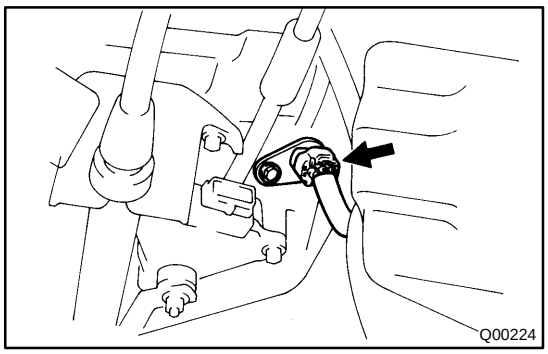

8. MANUAL SHIFTING TEST

HINT:

With this test, it can be determined whether the trouble is within the electrical circuit or is a mechanical problem in the transaxle.

(a) Disconnect the solenoid wire.

(b) Inspect the manual driving operation.

Check that the shift and gear positions correspond with the table below.

While driving, shift through the L, 2 and D positions. Check that the gear change corresponds to the shift position.

Shift Position	Gear Position
D	O/D
2	O/D
L	1st
R	Reverse
P	Pawl Lock

HINT:

If the L, 2 and D position gear positions are difficult to positions are difficult to distinguish, do the above read test.

If any abnormality is found in the above test, the problem is in the transaxle itself.

(c) Connect the solenoid wire.

(d) Cancel out the DTC (See page DI-160).

DI02I-07

PROBLEM SYMPTOMS TABLE

If a normal code is displayed during the diagnostic trouble code check but the trouble still occurs, check the circuits for each symptom in the order given in the charts on the following pages and proceed to the page given for troubleshooting.

The Matrix Chart is divided into 3 chapters.

Chapter 1: Electronic circuit matrix chart

Chapter 2: On-vehicle repair matrix chart

Chapter 3: Off-vehicle repair matrix chart

If the instruction ”Proceed to next circuit inspection shown in matrix chart” is given in the flow chart for each circuit, proceed to the circuit with the next highest number in the table to continue the check.

If the trouble still occurs even though there are no abnormalities in any of the other circuits, then check and replace the ECM.

Chapter 1: Electronic circuit matrix chart

Symptom	Suspect Area	See page
No up-shift (A particular gear, from 1st to 3rd gear, is not up-shifted)	ECM	IN-30
No up-shift (3rd → O/D)	1. O/D main switch & O/D OFF indicator light circuit 2. O/D cancel signal circuit 3. ECM	DI-206 DI-203 IN-30
No down-shift (O/D → 3rd)	ECM	IN-30
No down-shift (A particular gear, from 3rd to 1st gear, is not down-shifted)	ECM	IN-30
No lock-up or No lock-up off	ECM	IN-30
Shift point too high or too low	ECM	IN-30
Up-shift to 2nd while in L position	ECM	IN-30
Up-shift to 3rd while in 2 position	ECM	IN-30
Up-shift to O/D from 3rd while O/D main switch is OFF	1. O/D main switch & O/D OFF indicator light circuit 2. ECM	DI-206 IN-30
Up-shift to O/D from 3rd while engine is cold	ECM	IN-30
Harsh engagement (N → D)	ECM	IN-30
Harsh engagement (Any driving position)	ECM	IN-30
Poor acceleration	ECM	IN-30
Engine stalls when starting off or stopping	ECM	IN-30
No kick-down	ECM	IN-30

Chapter 2: On-vehicle repair
(● : A541E automatic transaxle repair manual Pub. No. RM741U)

Symptom	Suspect Area	See page
Vehicle does not move in any forward position and reverse position	1. Manual valve 2. Throttle valve 3. Primary regulator valve 4. Off-vehicle repair matrix chart	● ● ● -
Vehicle does not move in R position	Off-vehicle repair matrix chart	-
No up-shift (1st → 2nd)	1. 1-2 shift valve 2. Off-vehicle repair matrix chart	● -
No up-shift (2nd → 3rd)	1. 2-3 shift valve 2. Off-vehicle repair matrix chart	● -
No up-shift (3rd → O/D)	1. 3-4 shift valve 2. Off-vehicle repair matrix chart	● -
No down-shift (O/D → 3rd)	3-4 shift valve	●
No down-shift (3rd → 2nd)	2-3 shift valve	●
No down-shift (2nd → 1st)	1-2 shift valve	●
No lock-up or No lock-up off	1. Lock-up relay valve 2. Off-vehicle repair matrix chart	● -
Harsh engagement (N → D)	1. C_1 accumulator 2. Off-vehicle repair matrix chart	● -
Harsh engagement (N → R)	1. C_2 accumulator 2. No.1 accumulator control valve 3. Off-vehicle repair matrix chart	● ● -
Harsh engagement (N → L)	Low coast modulator valve	●
Harsh engagement (Lock-up)	1. Lock-up relay valve 2. Off-vehicle repair matrix chart	● -
Harsh engagement (1st → 2nd → 3rd → O/D)	1. Throttle modulator valve 2. Cut back valve 3. Throttle valve	● ● ●
Harsh engagement (2nd → 3rd)	C_2 accumulator	●
Harsh engagement (3rd → O/D)	B_0 accumulator	●
Harsh engagement (O/D → 3rd)	1. C_0 accumulator 2. B_0 accumulator	● ●
Slip or shudder (Forward and reverse)	1. Throttle valve 2. Oil strainer 3. Off-vehicle repair matrix chart	● ● -
No engine braking (1st: L position)	1. Low coast modulator valve 2. Off-vehicle repair matrix chart	● -
No engine braking (2nd: 2 position)	1. 2nd coast modulator valve 2. Off-vehicle repair matrix chart	● -
No kick-down	1. 1-2 shift valve 2. 2-3 shift valve 3. 3-4 shift valve	● ● ●

Chapter 3: Off-vehicle repair
(● : A541E automatic transaxle repair manual Pub. No. RM741U)

Symptom	Suspect Area	See page
Vehicle does not move in any forward position and reverse position	1. Front and rear planetary gear 2. O/D planetary gear 3. O/D one-way clutch (F_0) 4. O/D direct clutch (C_0) 5. Forward clutch (C_1) 6. O/D brake (B_0)	● ● ● ● ● ●
Vehicle does not move in R position	1. Front and rear planetary gear unit 2. Direct clutch (C_2) 3. O/D direct clutch (C_0) 4. 1st & reverse brake (B_3)	● ● ● ●
No up-shift (1st → 2nd)	1. No. 1 one-way clutch (F_1) 2. 2nd brake (B_2)	● ●
No up-shift (2nd → 3rd)	Direct clutch (C_2)	●
No up-shift (3rd → O/D)	O/D brake (B_0)	●
No lock-up or No lock-up off	Torque converter clutch	-
Harsh engagement (N → D)	1. Forward clutch (C_1) 2. O/D one-way clutch (F_0) 3. No. 2 one-way clutch (F_2)	● ● ●
Harsh engagement (N → R)	1. Direct clutch (C_2) 2. 1st & reverse brake (B_3)	● ●
Harsh engagement (Lock-up)	Torque converter clutch	-
Slip or shudder (Forward position: After warm-up)	1. Torque converter clutch 2. O/D direct clutch (C_0) 3. Forward clutch (C_1) 4. O/D one-way clutch (F_0)	● ● ● ●
Slip or shudder (R position)	1. Direct clutch (C_2) 2. 1st & reverse brake (B_3) 3. O/D direct clutch (C_0)	● ● ●
Slip or shudder (1st)	No. 2 one-way clutch (F_2)	●
Slip or shudder (2nd)	1. No. 1 one-way clutch (F_1) 2. 2nd brake (B_2)	● ●
Slip or shudder (3rd)	Direct clutch (C_2)	●
Slip or shudder (O/D)	O/D brake (B_0)	●
No engine braking (1st ~ 3rd: D position)	2nd brake (B_2)	●
No engine braking (1st: L position)	1st & reverse brake (B_3)	●
No engine braking (2nd: 2 position)	2nd coast brake (B_1)	●
Poor acceleration (All position)	1. Torque converter clutch 2. O/D planetary gear	- ●
Poor acceleration (O/D)	1. O/D direct clutch (C_0) 2. O/D planetary gear	● ●
Large shift shock or engine stalls when starting off or stopping	Torque converter clutch	-

DI6K7-01

TERMINALS OF ECM

ECM Terminals

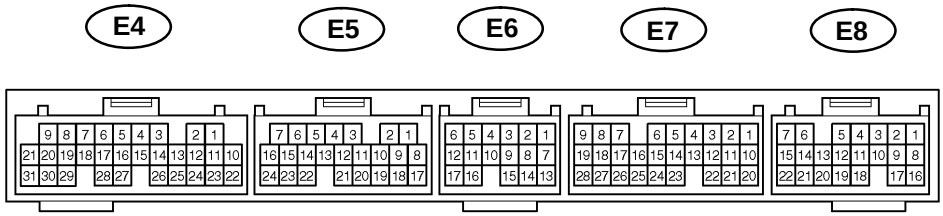

D01054

Symbols (Terminals No.)	Wiring Color	Condition	STD Voltage (V)
S1 (E4-7) ↔ E1 (E5-17)	P ↔ BR	IG ON	10 - 14
		1st or 2nd gear	10 - 14
		3rd or O/D gear	Below 1
S2 (E6-1) ↔ E1 (E5-17)	G-Y ↔ BR	IG ON	Below 1
		2nd or 3rd gear	10 - 14
		1st or O/D gear	Below 1
SL (E6-15) ↔ E1 (E5-17)	G-W ↔ BR	IG ON	Below 1
		Vehicle driving under lock-up position	10 - 14
$NC2^{+}$ (E4-24) ↔ $NC2^{-}$ (E4-23)	R ↔ G	Engine is running (Except 2nd gear)	Pulse signal is output Below 1 ↔ 4 - 5
SLN^{+} (E4-20) ↔ SLN^{-} (E4-19)	P-L ↔ Y	IG ON	10 - 14
OD1 (E7-24) ↔ E1 (E5-17)	GR ↔ BR	IG ON	5 - 6
ODLP (E8-9) ↔ E1 (E5-17)	G-O ↔ BR	Except O/D gear	10 - 14
		O/D gear	Below 1
L (E6-13) ↔ E1 (E5-17)	Y ↔ BR	IG ON and Shift lever L position	10 - 14
		IG ON and Shift lever other than L position	Below 1
2 (E6-14) ↔ E1 (E5-17)	G-Y ↔ BR	IG ON and Shift lever 2 position	10 - 14
		IG ON and Shift lever other than 2 position	Below 1
R (E6-8) ↔ E1 (E5-17)	R-B ↔ BR	IG ON and Shift lever R position	10 - 14
		IG ON and Shift lever other than R position	Below 1
NSW (E7-20) ↔ E1 (E5-17)	B-W ↔ BR	IG ON and Shift lever P or N position	10 - 14
		IG ON and Shift lever other than P or N position	Below 1
ODMS (E6-12) ↔ E1 (E5-17)	G-O ↔ BR	IG ON	10 - 14
		IG ON and Press continuously O/D main switch	Below 1.5
SPD (E7-22) ↔ E1 (E5-17)	V-W ↔ BR	IG ON and vehicle stationary	Below 1.5
		IG ON and one front wheel is turned slowly	Pulse signal is output Below 1.5 ↔ 4 - 5

DI6LY-01

Driver buckle switch circuit

WIRING DIAGRAM

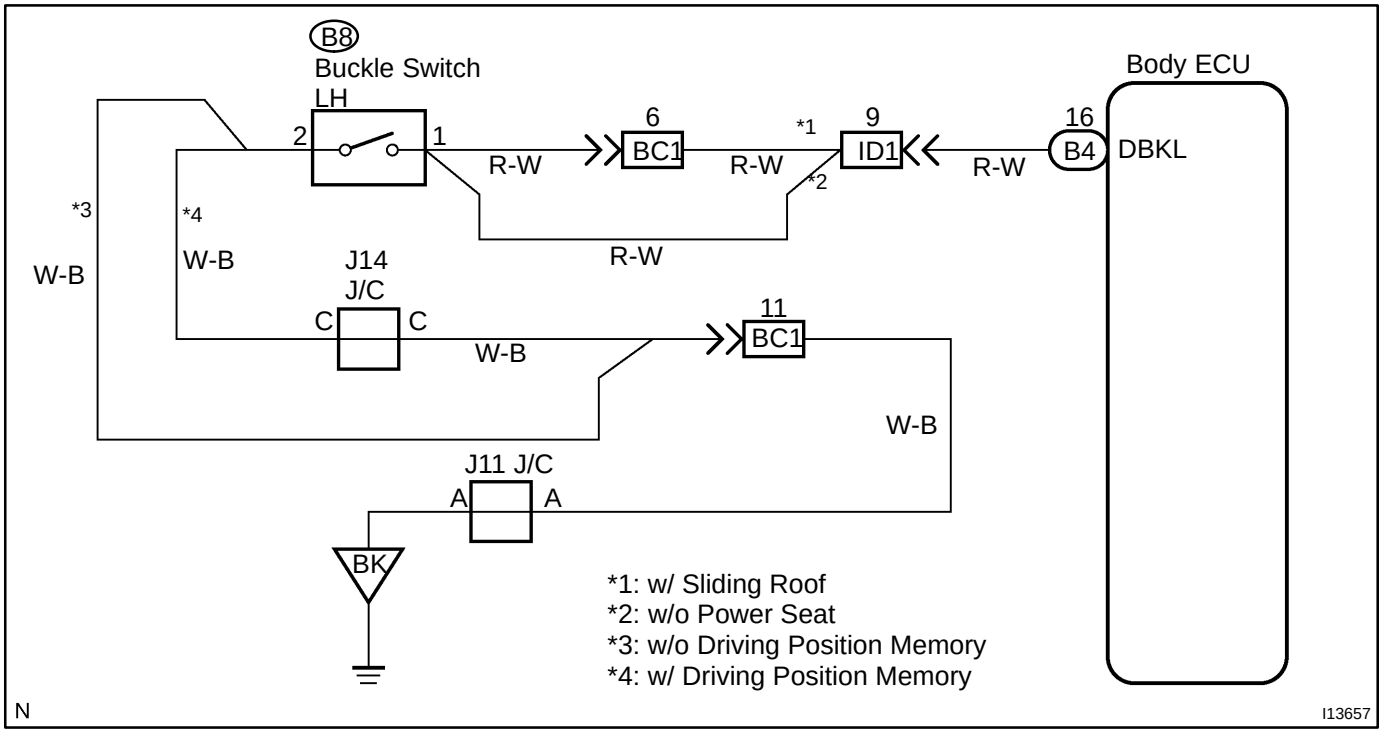

INSPECTION PROCEDURE

1	Check driver buckle switch. (See page BE-53)

NG → Replace the driver buckle switch.

OK

2	Check wireharness and connector between driver buckle switch and body ground (See page IN-30).

NG → Repair or replace wireharness or connector.

OK

Proceed to next circuit inspection shown on problem symptoms table (See page DI-622).

DI6M2-01

Diagnosis Circuit

CIRCUIT DESCRIPTION

This circuit sends a signal to the ECU that DTC output is required.

WIRING DIAGRAM

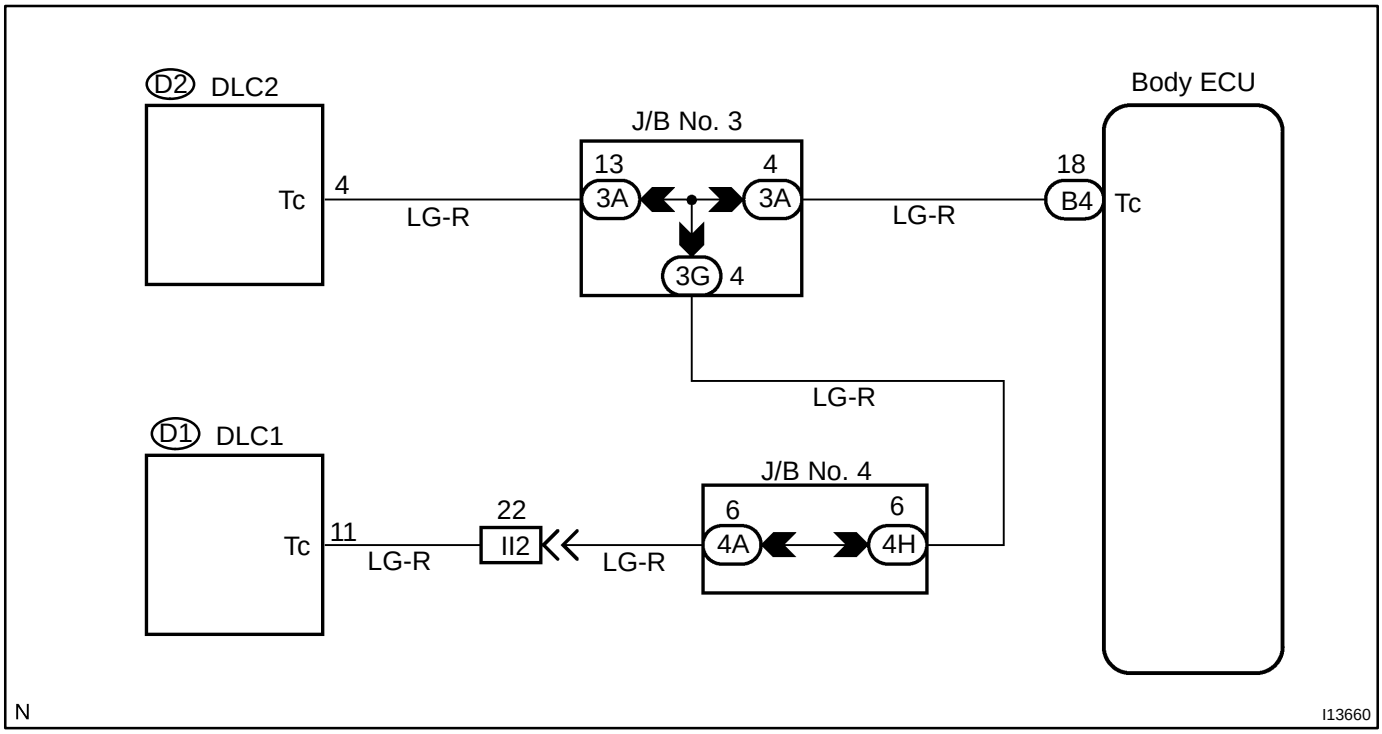

INSPECTION PROCEDURE

1	**Check voltage between terminals Tc and E_1 of DLC3.**

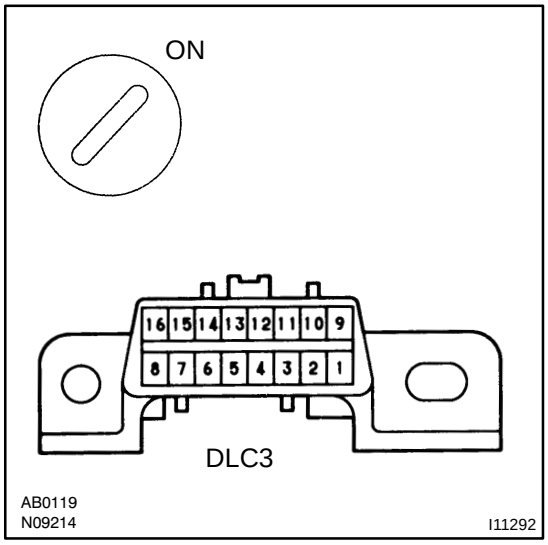

PREPARATION:
Turn ignition switch ON.
CHECK:
Measure voltage between terminals SIL(7) and CG(4) of DLC3.
OK:
Voltage: 10 - 14 V

OK → **Proceed to next circuit inspection shown in problem symptom table (See page DI-622).**

NG

2	**Check harness and connector between body control ECU and DLC3, DLC3 and body ground (See page IN-30).**

NG → **Repair or replace harness or connector.**

OK

Check and replace Body Control ECU (See page IN-30).

DI6LP-01

Door courtesy switch circuit

CIRCUIT DESCRIPTION

The door courtesy switch goes on when the door is opened and goes off when door is closed.

WIRING DIAGRAM

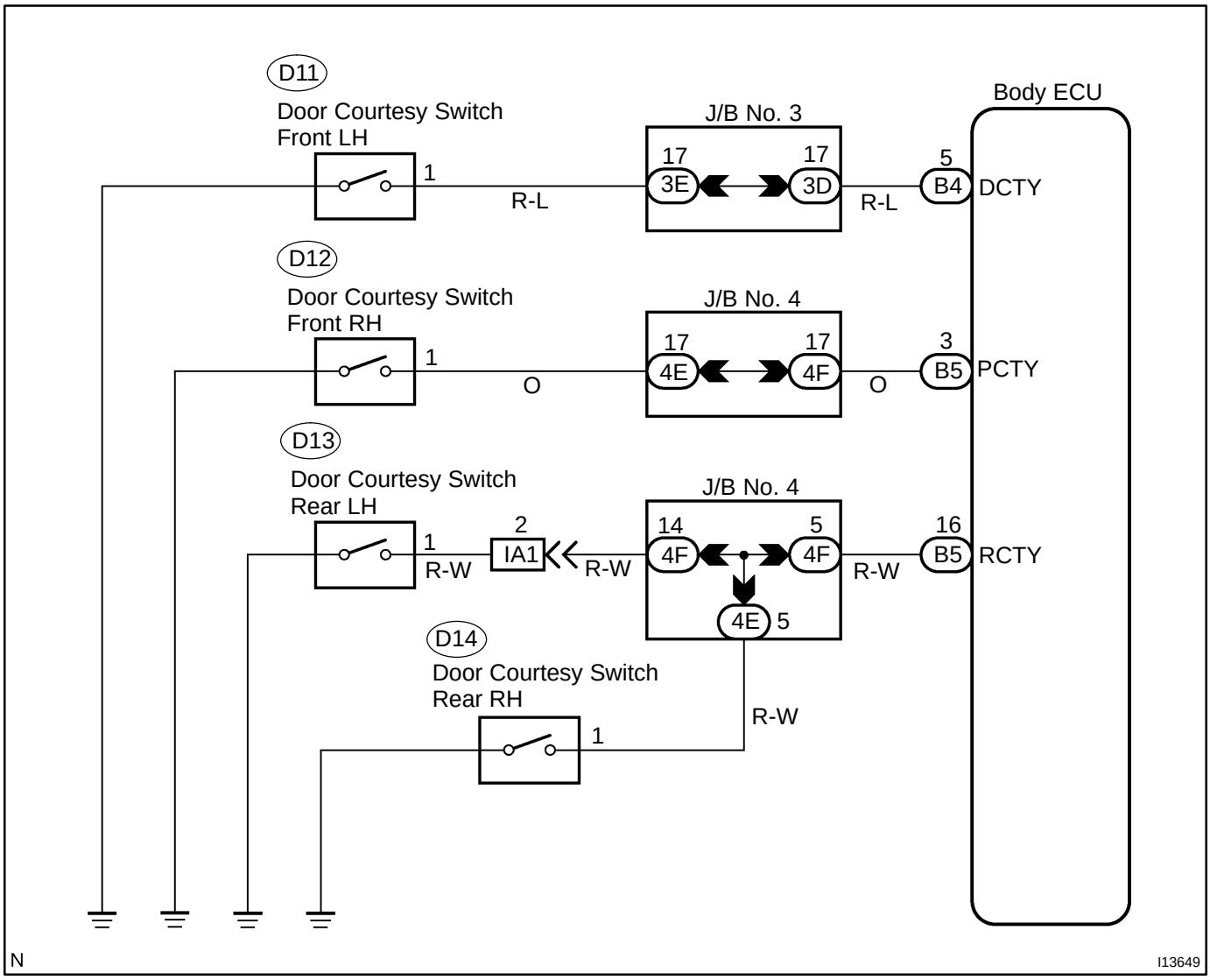

INSPECTION PROCEDURE

1	**Check operation of door courtesy light.**

CHECK:

Check that door courtesy light comes on when door opened, and goes off when door is closed.

OK:

Must be operated normally.

OK → **Proceed to next circuit inspection shown on problem symptom table (See page DI-622).**

NG

2	**Check courtesy switch (See page BE-31).**

NG → **Replace the courtesy switch.**

OK

3	**Check wireharness and connector between courtesy light and body ECU, courtesy switch and body door ECU (See page IN-30).**

NG → **Repair or replace wireharness or connector.**

OK

Proceed to next circuit inspection shown on problem symptoms table (See page DI-622).

DI6LR-01

Rear door unlock detection switch circuit

CIRCUIT DESCRIPTION

The door unlock detection switch is built in the door lock motor assembly. This switch is ON when the door lock knob is in the unlock position and OFF when the lock knob is in the lock position. The ECU detects the door lock knob conditions is this circuit. It is used as one of the operating conditions for the key confinement prevention function.

WIRING DIAGRAM

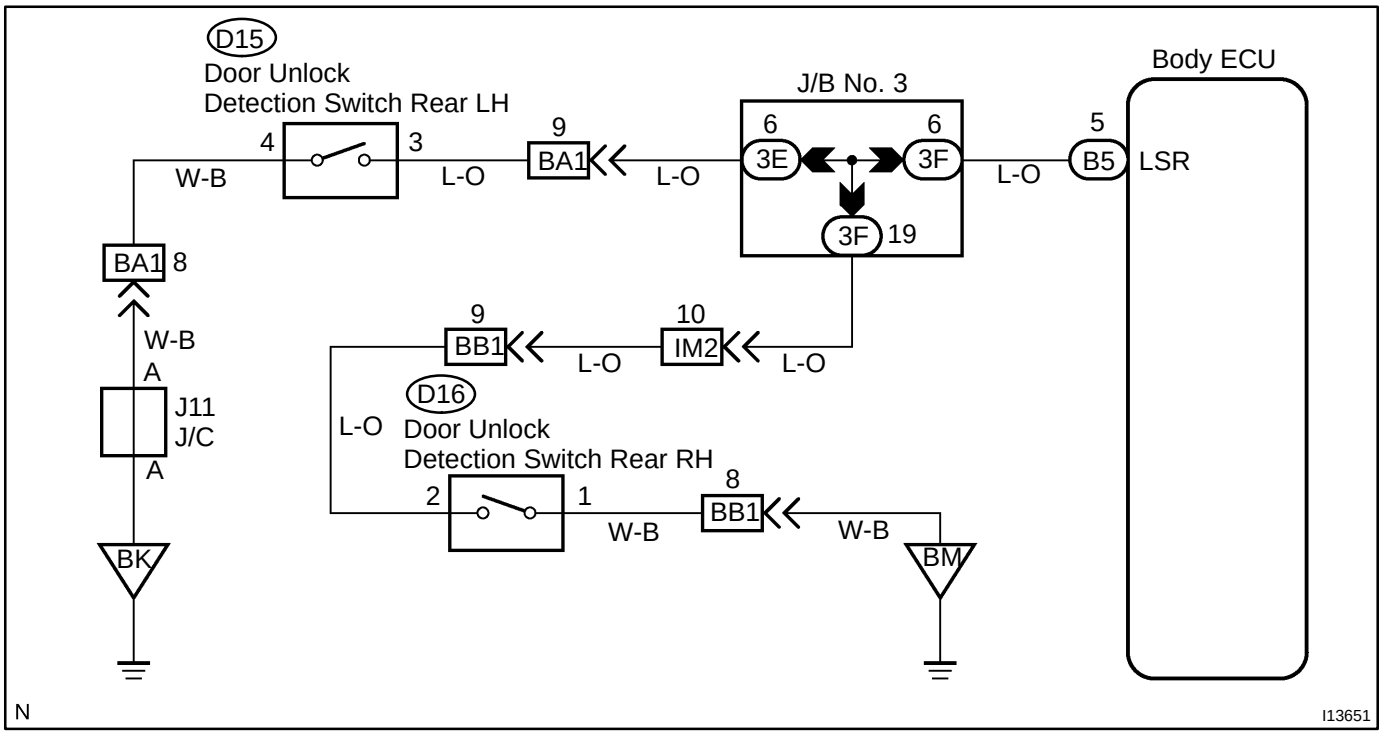

INSPECTION PROCEDURE

1	Check door unlock detection switch. (See page BE-82)

NG → Replace the door lock motor.

OK

2	Check wireharness and connector between door unlock detection switch and body ECU. (See page IN-30)

NG → Repair or replace wireharness or connector.

OK

Proceed to next circuit inspection shown on problem symptoms table.
(See page DI-622)

DI6LQ-01

Door lock motor circuit

WIRING DIAGRAM

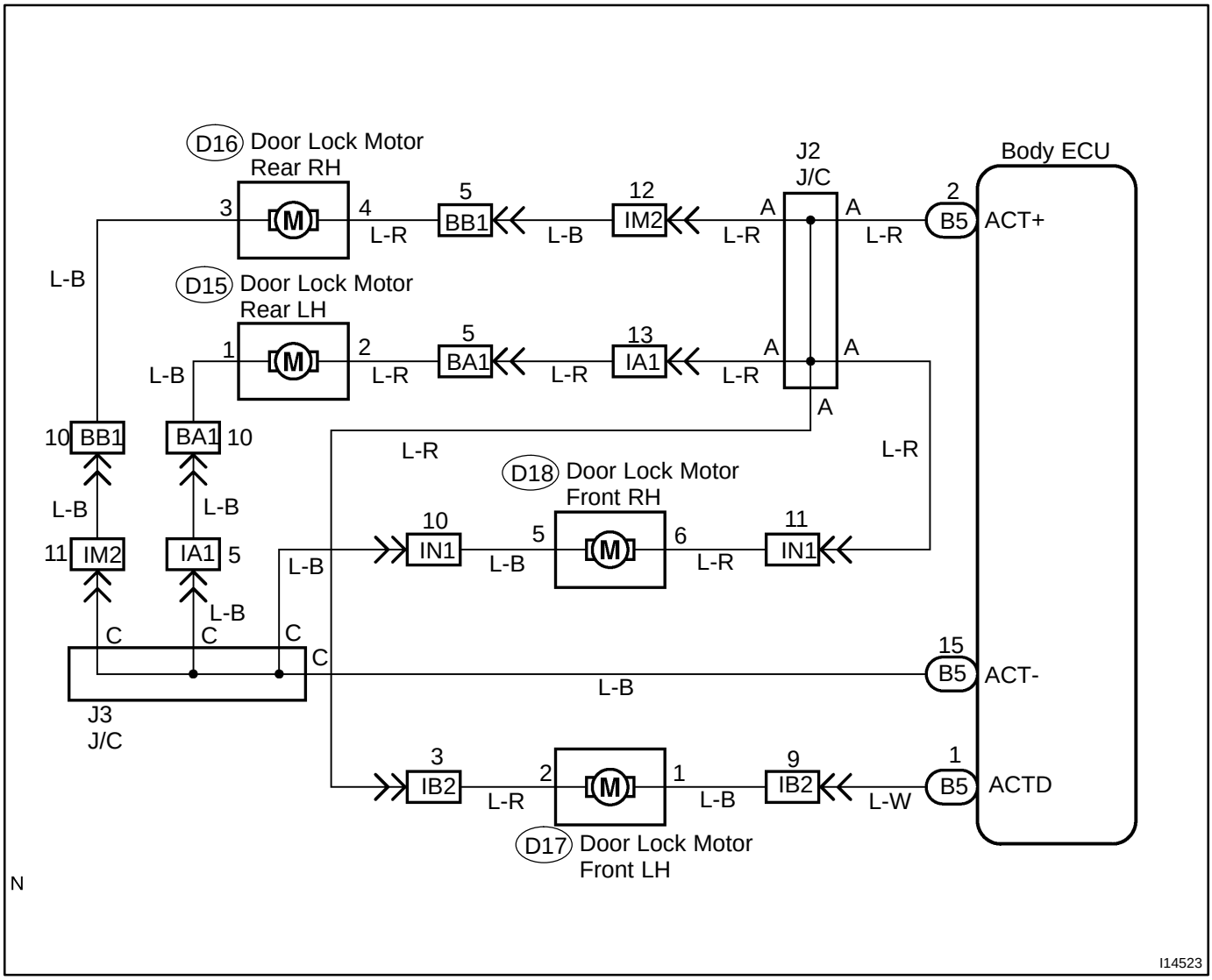

INSPECTION PROCEDURE

1	Check door lock motor. (See page BE-82)

NG → Replace the door lock motor.

OK ↓

2	Check wireharness and connector between door lock motor and body ECU. (See page IN-30)

NG → Repair or replace wireharness or connector.

OK ↓

Proceed to next circuit inspection shown on problem symptoms table. (See page DI-622)

DI6M3-01

Daytime running light No.2, 3 and 4 relay circuit

WIRING DIAGRAM

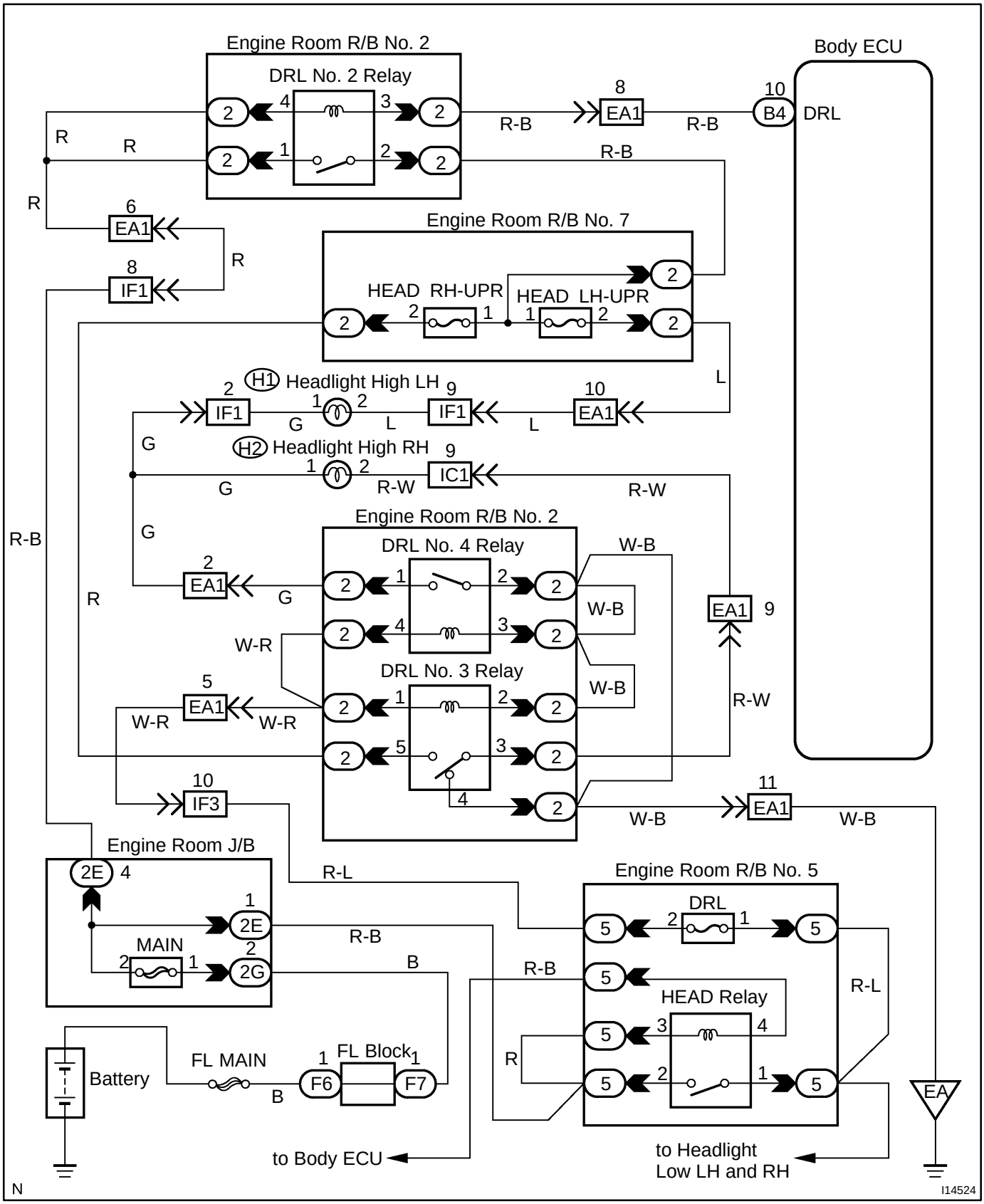

2001 AVALON (RM808U)

Author : **Date :** **824**

INSPECTION PROCEDURE

1	Check D.R.L relay No.2,3 and 4.

NG → Replace the D.R.L relay No.2, 3 and4.

OK

2	Check wire harness and connector between D.R.L relay and Body ECU, battery and D.R.L relay (See page IN-30).

NG → Repair or replace wire harness or connector.

OK

Proceed to next circuit inspection shown on problem symptoms table (See page DI-622).

DI6LN-01

Headlight relay circuit

CIRCUIT DESCRIPTION

Head light relay will be ”ON” by operating the headlight switch. The transistor which activates the taillight relay has two sorts: one activates directly by the headlight switch for fail safe and the other activates by CPU. the one that activates by CPU has two systems and prevents the headlight from turning off at the time of one system trouble in the automatic operation circuit.

WIRING DIAGRAM

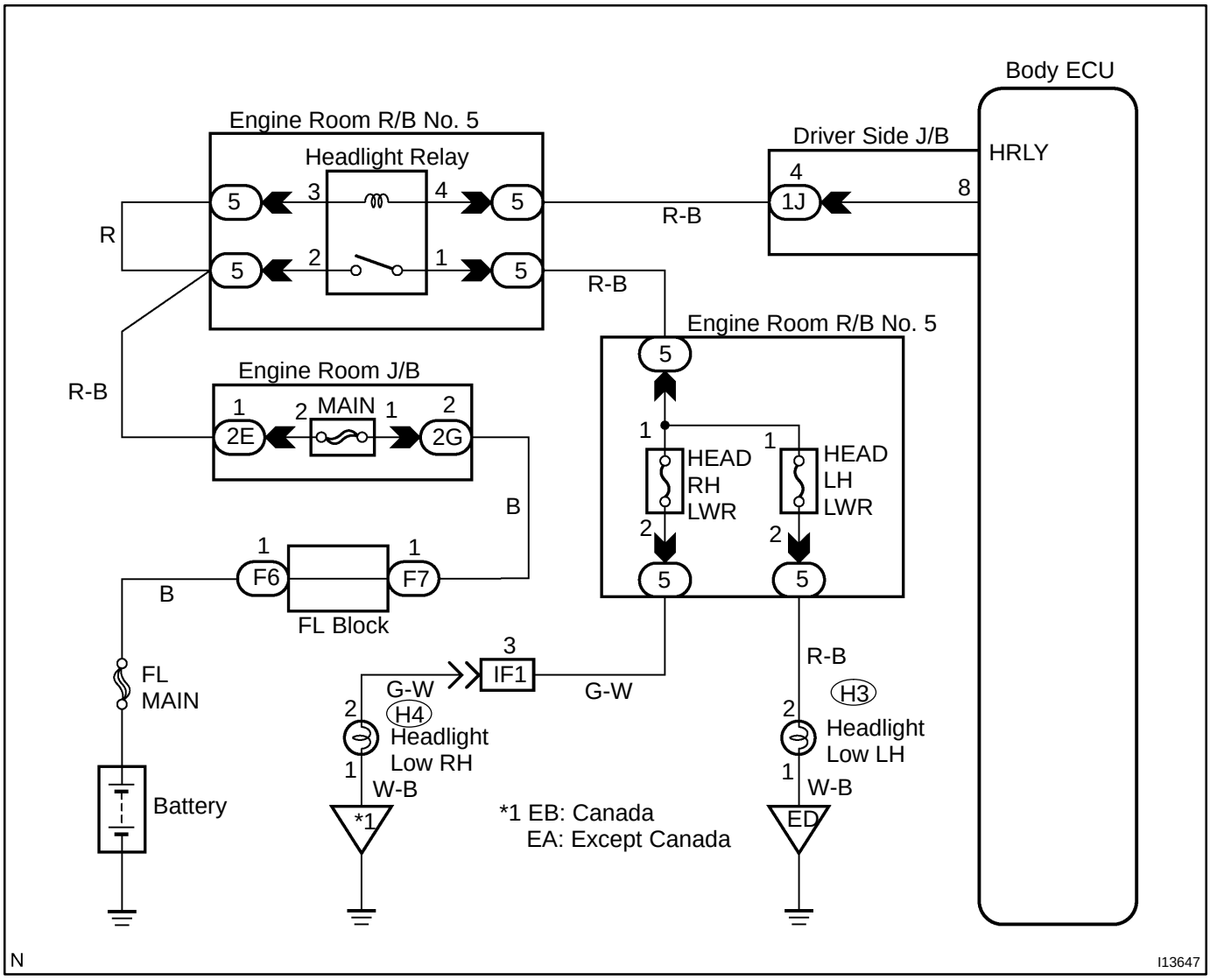

INSPECTION PROCEDURE

1	Check headlight relay (See page BE-19).

NG → Replace the headlight relay.

OK

2	Check wireharness and connector between headlight relay and Body ECU, battery and headlight relay (See page IN-30).

NG → Repair or replace wireharness or connector.

OK

Proceed to next circuit inspection shown on problem symptoms table (See page DI-622).

DI6M4-01

Horn circuit

CIRCUIT DESCRIPTION

The horn is connected to the body ECU and activated by the body ECU during warning of the theft deterrent system.

WIRING DIAGRAM

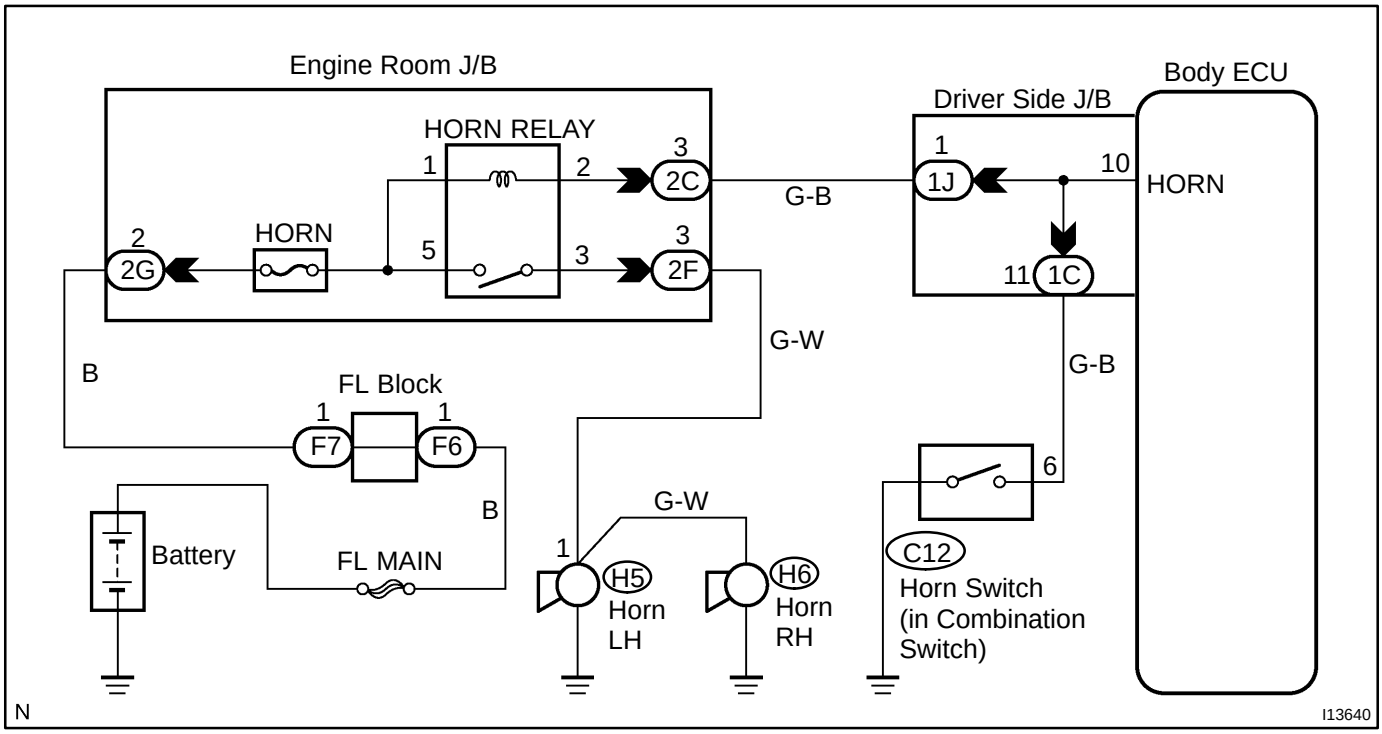

INSPECTION PROCEDURE

1	**Check horn.**

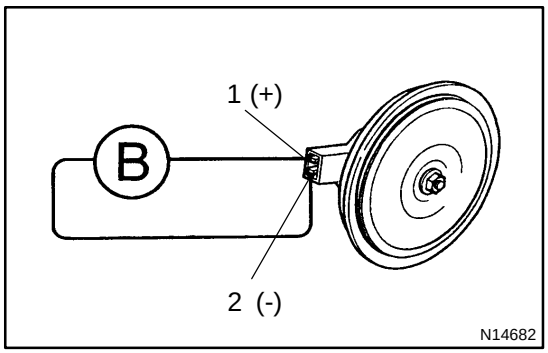

PREPARATION:
Connect positive (+) lead from the battery to terminal 1 and negative (-) lead to terminal 2 of theft deterrent horn connector.
OK:
Theft deterrent horn blows.

NG → **Replace the horn.**

OK

2	**Check wireharness and connector between horn relay and body ECU, battery and horn relay. (See page IN-30)**

NG → **Repair or replace wireharness or connector.**

OK

**Proceed to next circuit inspection shown on problem symptoms table.
(See page DI-622)**

DI6LX-01

Illumination circuit

CIRCUIT DESCRIPTION

Receiving the courtesy signal from either of the door ECU, the Body ECU will make the interior light, ignition light, and foot light come on.

WIRING DIAGRAM

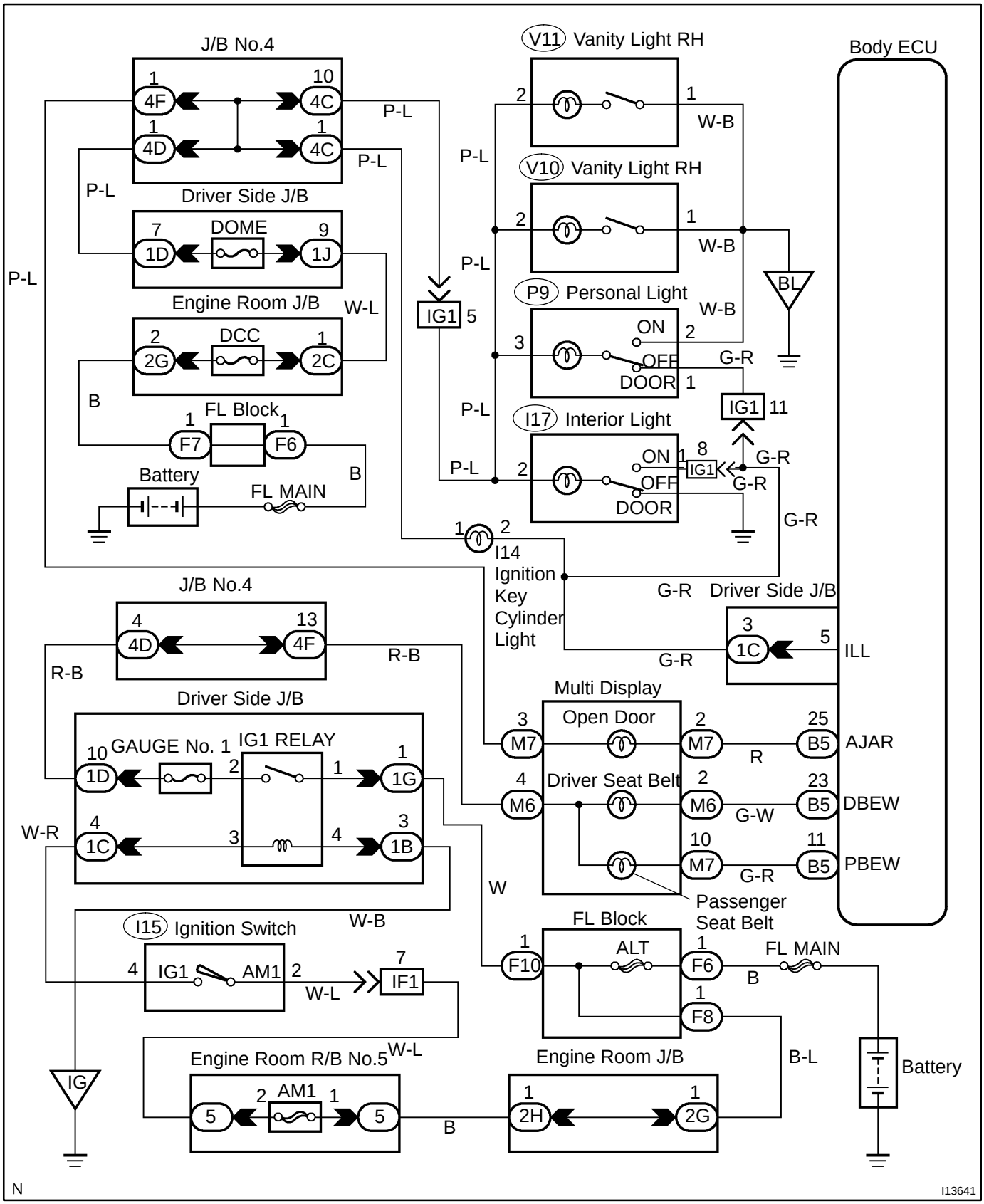

INSPECTION PROCEDURE

1	Check illumination light (Interior light system)(See page BE-31).

NG → Replace the failure light.

OK

2	Check wireharness and connector between each illumination light and Body ECU, battery and each illumination light (See page IN-30).

NG → Repair or replace wireharness or connector.

OK

Proceed to next circuit inspection shown on problem symptoms table (See page DI-622).

DI6LO-01

Key unlock warning switch circuit

CIRCUIT DESCRIPTION

The key unlock warning switch goes on when the ignition key is inserted in the key cylinder and goes off when the ignition key is removed.
The ECU operates the key confinement prevention function while the key unlock warning switch is on.

WIRING DIAGRAM

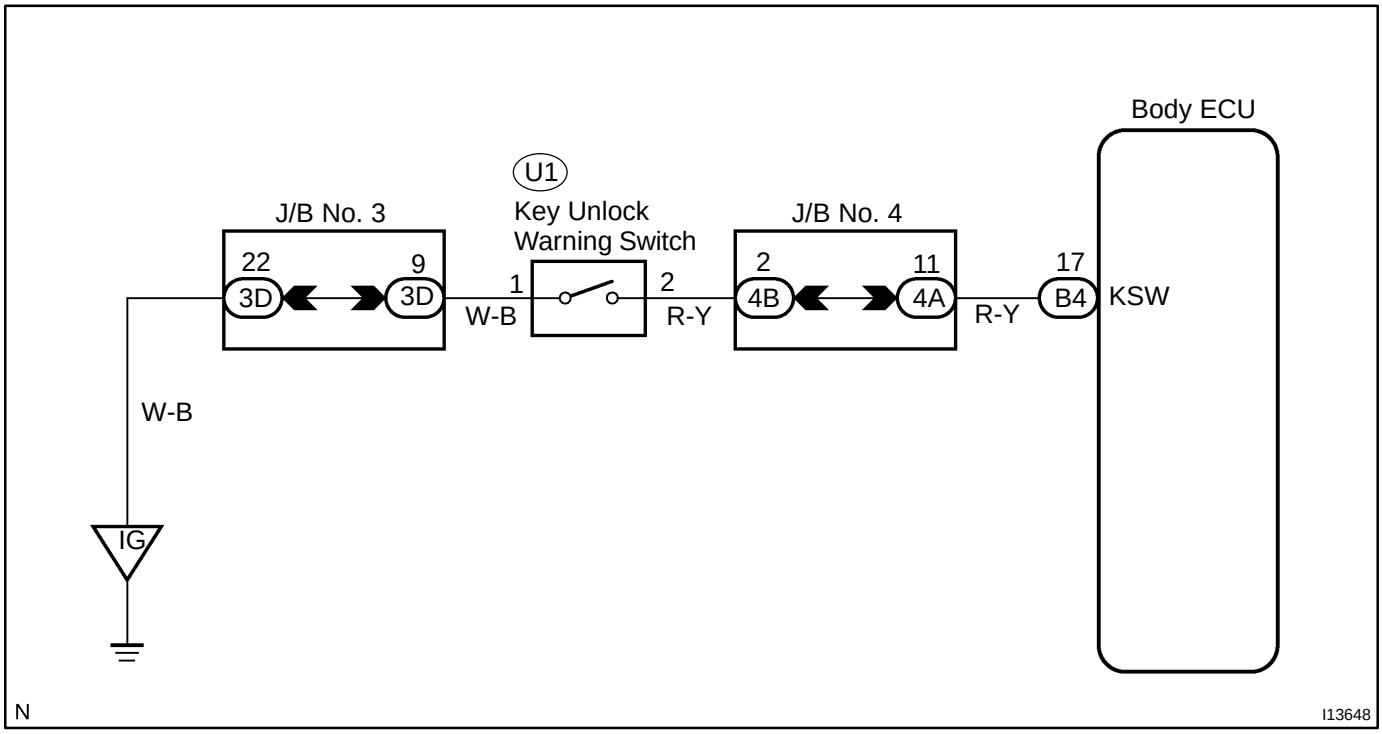

INSPECTION PROCEDURE

1	Check key unlock warning switch (See page BE-16).

NG → Replace the key unlock warning switch.

OK

2	Check wireharness and connector between key unlock warning switch and Body ECU (See page IN-30).

NG → Repair or replace wireharness or connector.

OK

Proceed to next circuit inspection shown on problem symptoms table (See page DI-622).

DI6LL-01

Light control switch circuit

WIRING DIAGRAM

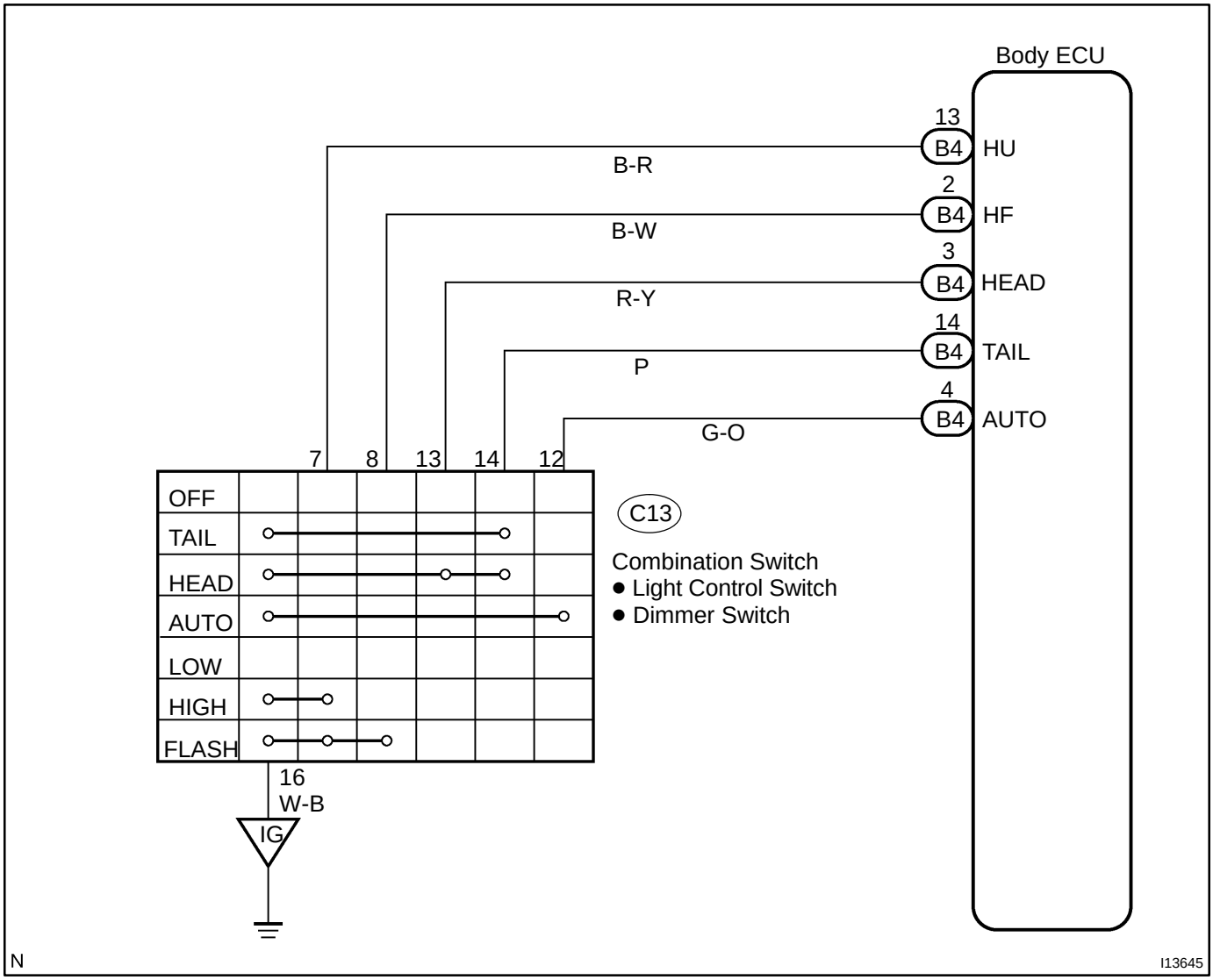

INSPECTION PROCEDURE

1	Check headlight control switch (See page BE-19).

NG → Replace the headlight control switch.

OK

2	Check wireharness and connector between headlight control switch and Body ECU (See page IN-30).

NG → Repair or replace wireharness or connector.

OK

Proceed to next circuit inspection shown on problem symptoms table (See page DI-622).

DI6LU-01

Luggage opener motor circuit

WIRING DIAGRAM

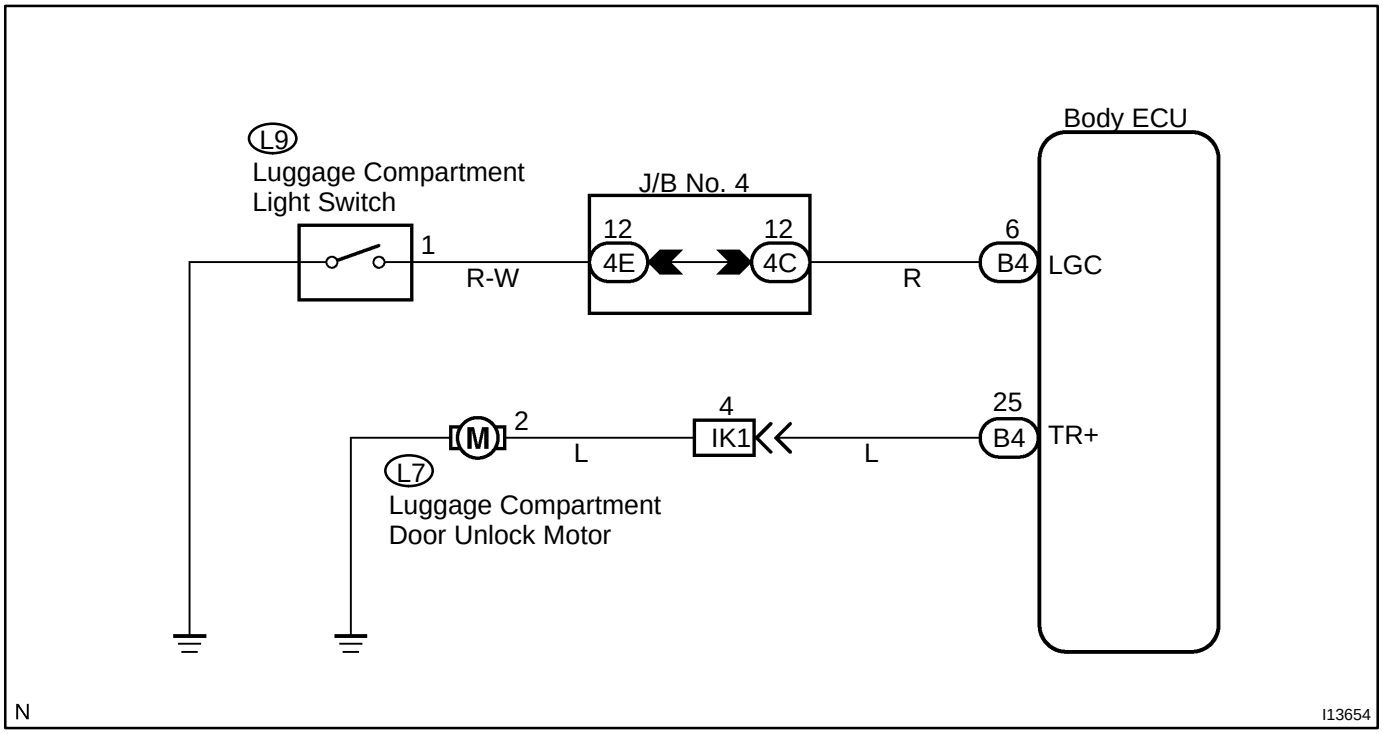

INSPECTION PROCEDURE

1	Check luggage opener motor. (See page BE-82)

NG → Replace the luggage opener motor.

OK

2	Check wireharness and connector between luggage opener motor and body ECU. (See page IN-30)

NG → Repair or replace wireharness or connector.

OK

Proceed to next circuit inspection shown on problem symptoms table.
(See page DI-622)

DI6LT-01

Luggage opener switch circuit

WIRING DIAGRAM

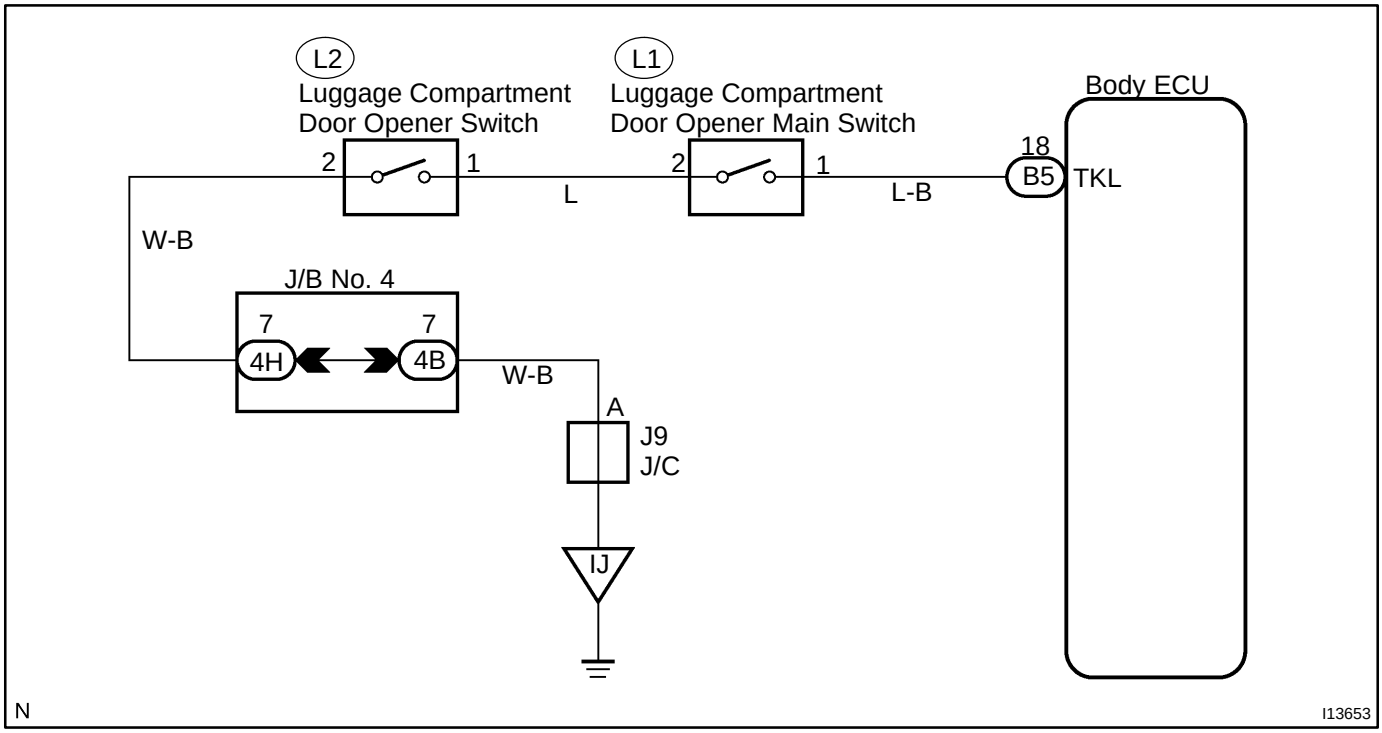

INSPECTION PROCEDURE

1	Check luggage opener switch and main switch (See page BE-82).

NG → Replace the luggage opener switch and main switch.

OK

2	Check wireharness and connector between luggage opener switch and Body ECU (See page IN-30).

NG → Repair or replace wireharness or connector.

OK

Proceed to next circuit inspection shown on problem symptoms table (See page DI-622).

DI29Y-05

Parking brake switch circuit

WIRING DIAGRAM

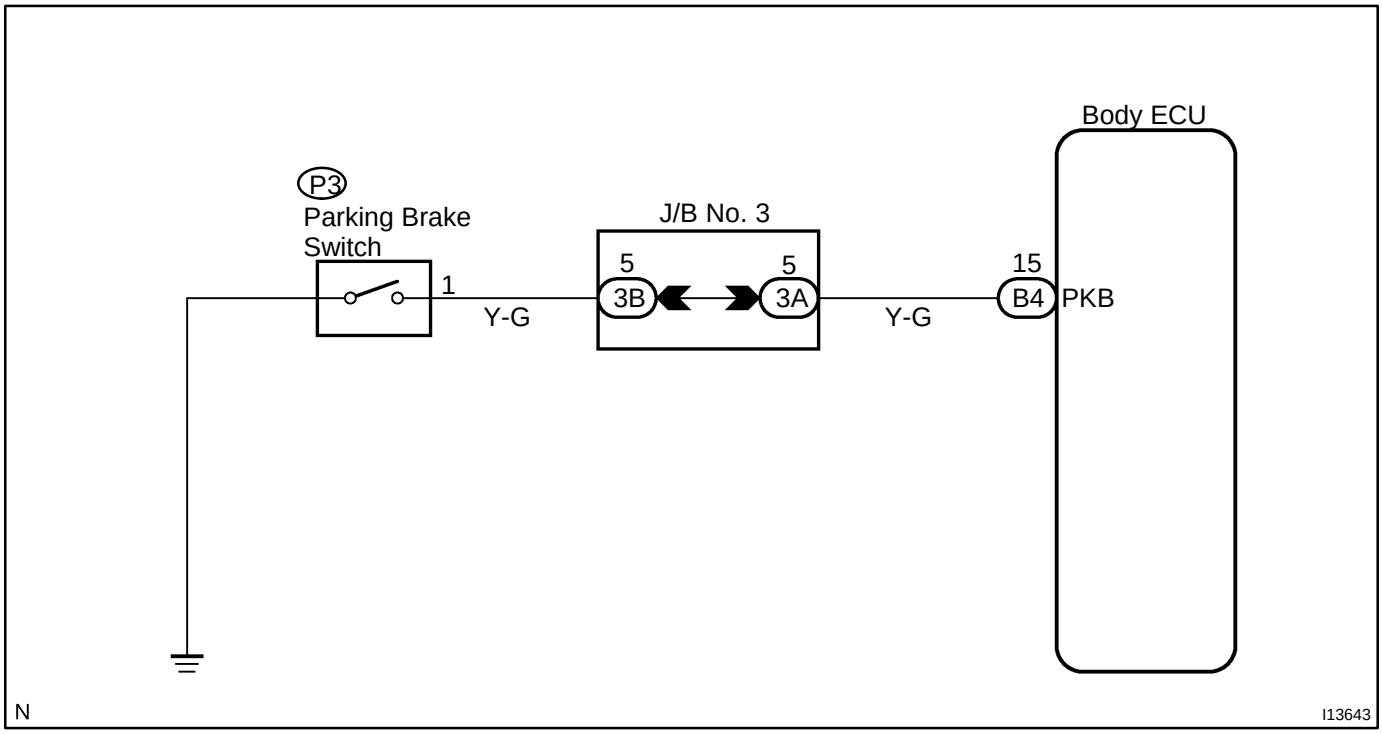

INSPECTION PROCEDURE

1	Check parking brake switch (See page BE-53).

NG → Replace the parking brake switch.

OK

2	Check wireharness and connector between parking brake switch and body ECU. (See page IN-30)

NG → Repair or replace wireharness or connector.

OK

Proceed to next circuit inspection shown on problem symptoms table.
(See page DI-622)

DI6LZ-01

Passenger buckle switch and seat belt warning occupant detection sensor

CIRCUIT DESCRIPTION

This circuit detects the conditions of the passenger buckle switch and the seat belt warning occupant detection sensor, and makes the passenger seat belt warning flash.

WIRING DIAGRAM

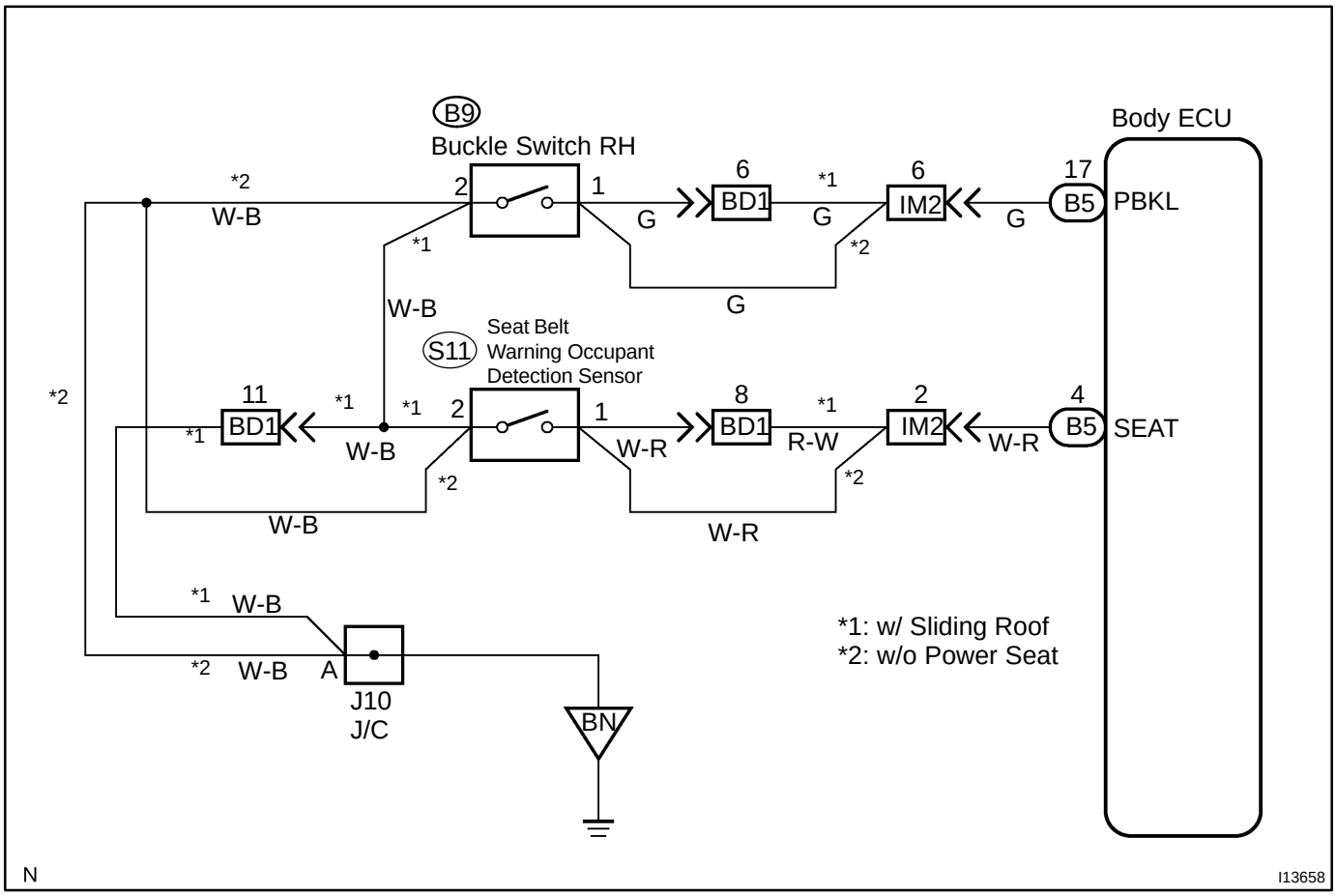

INSPECTION PROCEDURE

1	Check passenger buckle switch. (See page BE-53)

NG → Replace the passenger buckle switch.

OK

2	Check seat belt warning occupant Detection sensor. (See page BE-53)

NG → Replace the seat belt warning occupant Detection sensor.

OK

3	Check wireharness and connector between seat belt warning occupant Detection sensor and body ECU, passenger buckle switch and seat belt warning occupant Detection sensor, passenger buckle switch and body ground.

NG → Repair or replace wireharness or connector.

OK

Proceed to next circuit inspection shown on problem symptoms table.
(See page DI-622)

DI6M1-01

Park/Neutral Position Switch Circuit

CIRCUIT DESCRIPTION

The park/neutral position switch detects the shift lever p position and sends signals to the Body ECU.

WIRING DIAGRAM

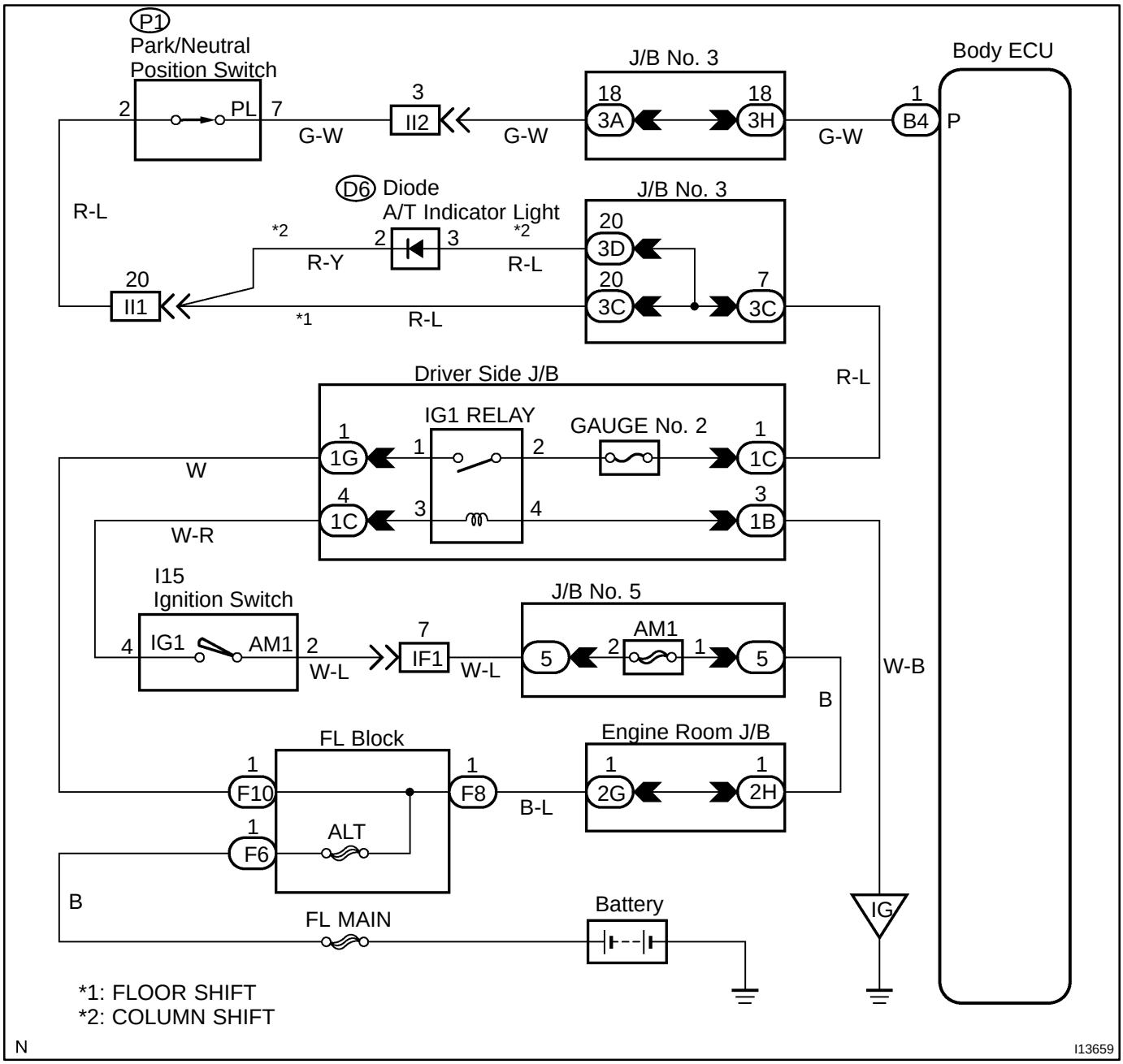

INSPECTION PROCEDURE

1	**Check A/T shift operation.**

CHECK:

Check that the A/T shift operates normally.

NG → **Proceed to AT troubleshooting. (See page DI-158)**

OK

2	**Check harness and connector between Body ECU and park/neutral position switch (See page IN-30).**

NG → **Repair or replace harness or connector.**

OK

Check and replace Body ECU (See page IN-30).

DI6LK-01

CIRCUIT INSPECTION

Power source circuit

CIRCUIT DESCRIPTION

This circuit provides power to operate the Body ECU.

WIRING DIAGRAM

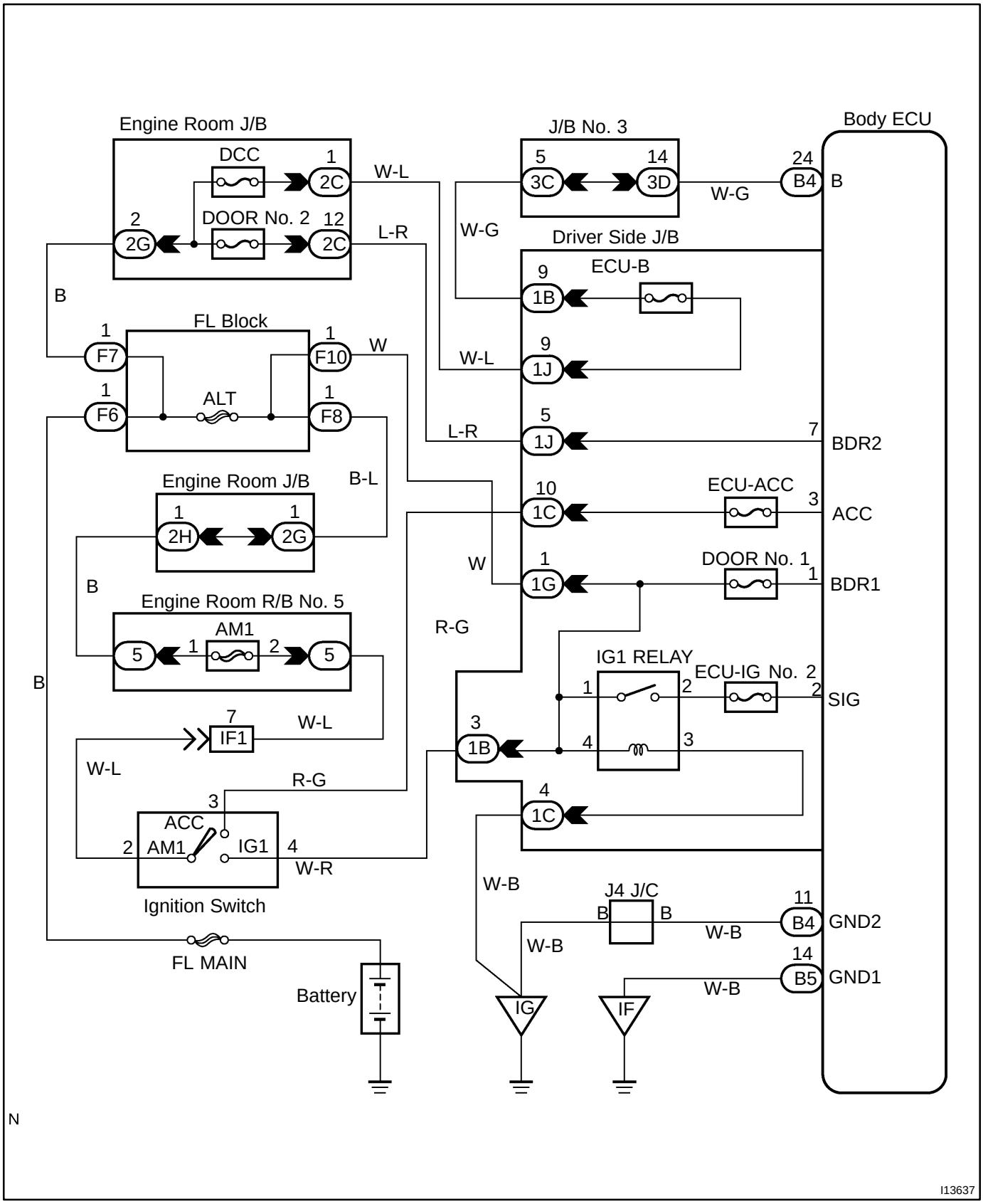

INSPECTION PROCEDURE

1	**Check ECU-ACC, DOOR No. 1, DOOR No. 2, ECU-IG No. 2, ECU-B No. 1 and ECU-B No. 2 fuse.**

CHECK:
Check continuity of ECU-ACC, DOOR No. 1, DOOR No. 2, ECU-IG No. 2, ECU-B No. 1 and ECU-B No. 2 fuse.
OK:
Continuity

NG → **Replace the failure fuse.**

OK

2	**Check voltage between terminals ACC, B, BDR 1, BDR 2, SIG and GND or GND2 of Body ECU connector.**

PREPARATION:
Turn ignition switch ON.
CHECK:
Measure voltage between terminals ACC, SIG, BDR 1, and GND, GND2.
OK:
Voltage: 10 - 14V
PREPARATION:
(a) Turn ignition switch OFF.
(b) Disconnect the Body ECU connector.
CHECK:
Measure voltage between terminals B, BDR 2, BSUB and GND, GND2.
OK:
Voltage: 10 - 14V

OK → **Proceed to next circuit inspection shown on problem symptoms table (See page DI-622).**

NG

3	**Check wireharness and connector between Body ECU and body ground (See page IN-30).**

NG → **Repair or replace wireharness or connector.**

OK

Check and repair wireharness and connector between Body ECU and battery (See page IN-30).

DI6LS-01

Rear power window switch circuit

CIRCUIT DESCRIPTION

Power window switch circuit can be checked using DTC check. (Refer to DI-738)

WIRING DIAGRAM

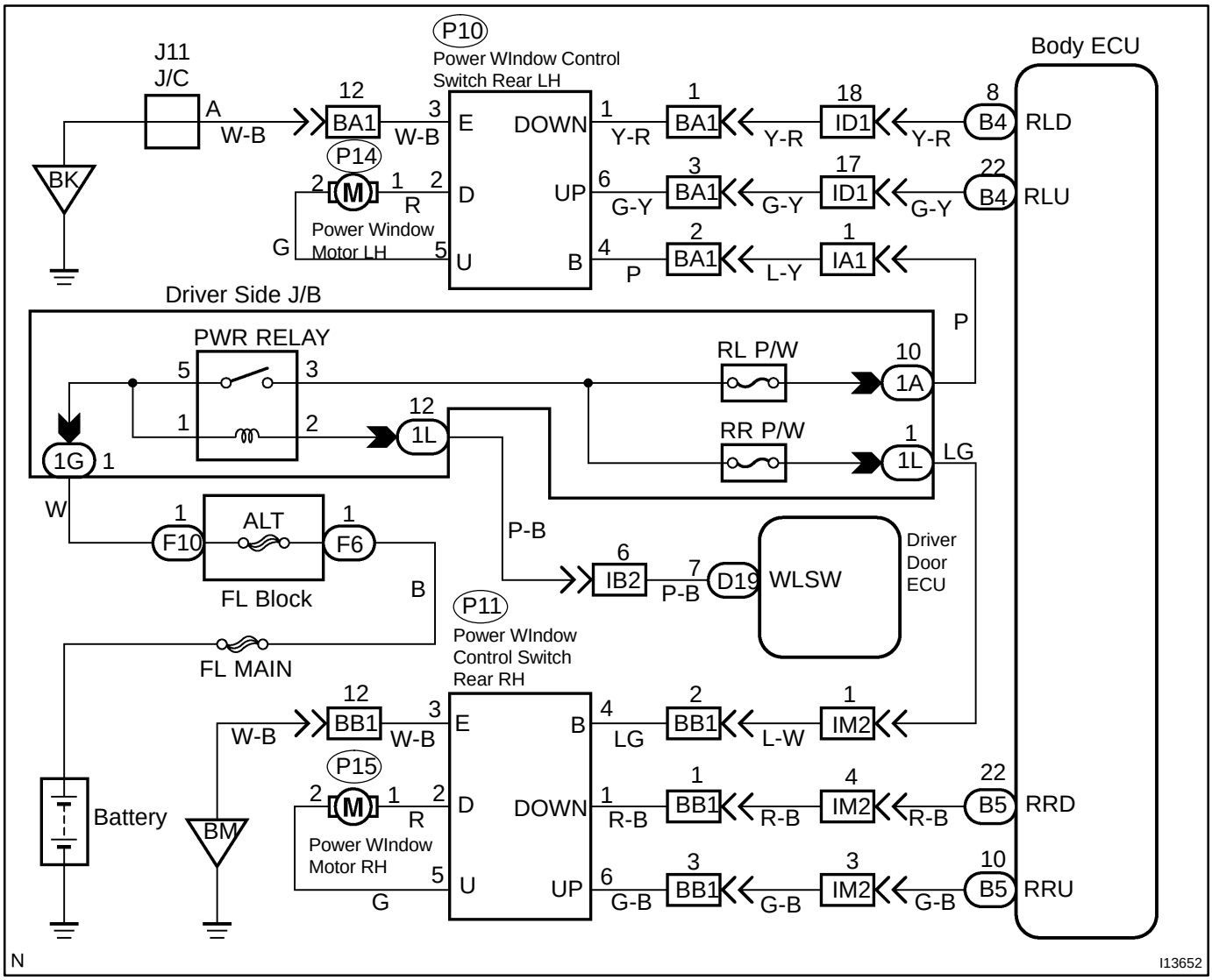

INSPECTION PROCEDURE

1	Check the power window switch. (See page BE-73)

NG → Replace the power window switch.

OK

2	Check wireharness and connector between power window switch and Body ECU. (See page IN-30)

NG → Repair or replace wireharness or connector.

OK

3	Check wireharness and connector between power window switch and power window master switch. (See page IN-30)

NG → Repair or replace wireharness or connector.

OK

Proceed to next circuit inspection shown on problem symptoms table.
(See page DI-622)

DI6M0-01

Stop light switch circuit

CIRCUIT DESCRIPTION

The Body ECU is detecting the condition of the stop light switch.

WIRING DIAGRAM

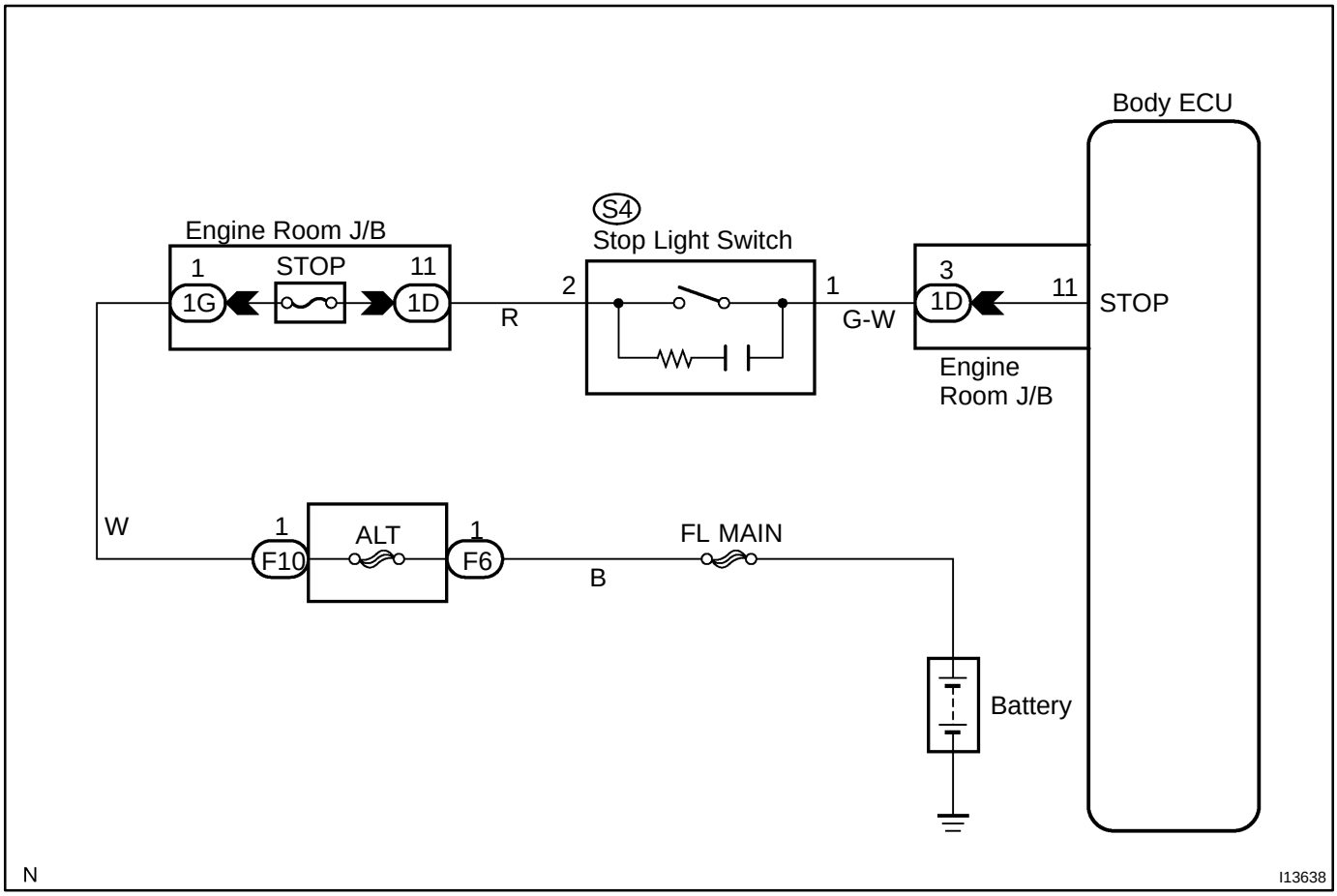

INSPECTION PROCEDURE

1	Check stop light switch. (See page BE-36)

NG → Replace the stop light switch.

OK

2	Check wireharness and connector between stop light switch and Body ECU, battery and stop light switch (See page IN-30).

NG → Repair or replace wireharness or connector.

OK

Proceed to next circuit inspection shown on problem symptoms table (See page DI-622).

DI6LM-01

Taillight relay circuit

CIRCUIT DESCRIPTION

Taillight relay will be ”ON” by operating the taillight switch. The transistor which activates the tail light relay has two sorts: one activates by the tail light switch for fail safe and the other activates by CPU.

WIRING DIAGRAM

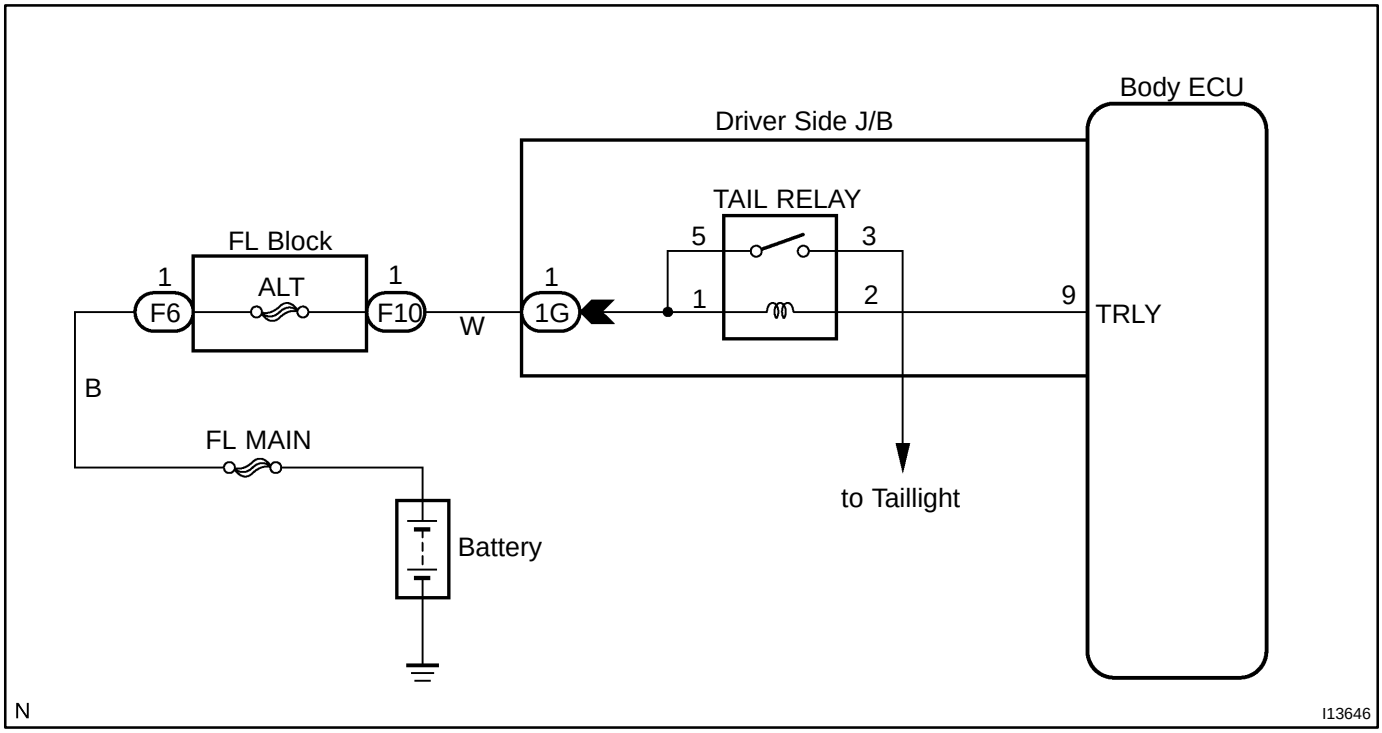

INSPECTION PROCEDURE

1	Check taillight relay (See page BE-19).

NG → Replace the taillight relay.

OK

2	Check wireharness and connector between taillight relay and Body ECU, battery and taillight relay (See page IN-30).

NG → Repair or replace wireharness or connector.

OK

Proceed to next circuit inspection shown on problem symptoms table (See page DI-622).

DI6LW-01

Wireless door lock buzzer circuit

WIRING DIAGRAM

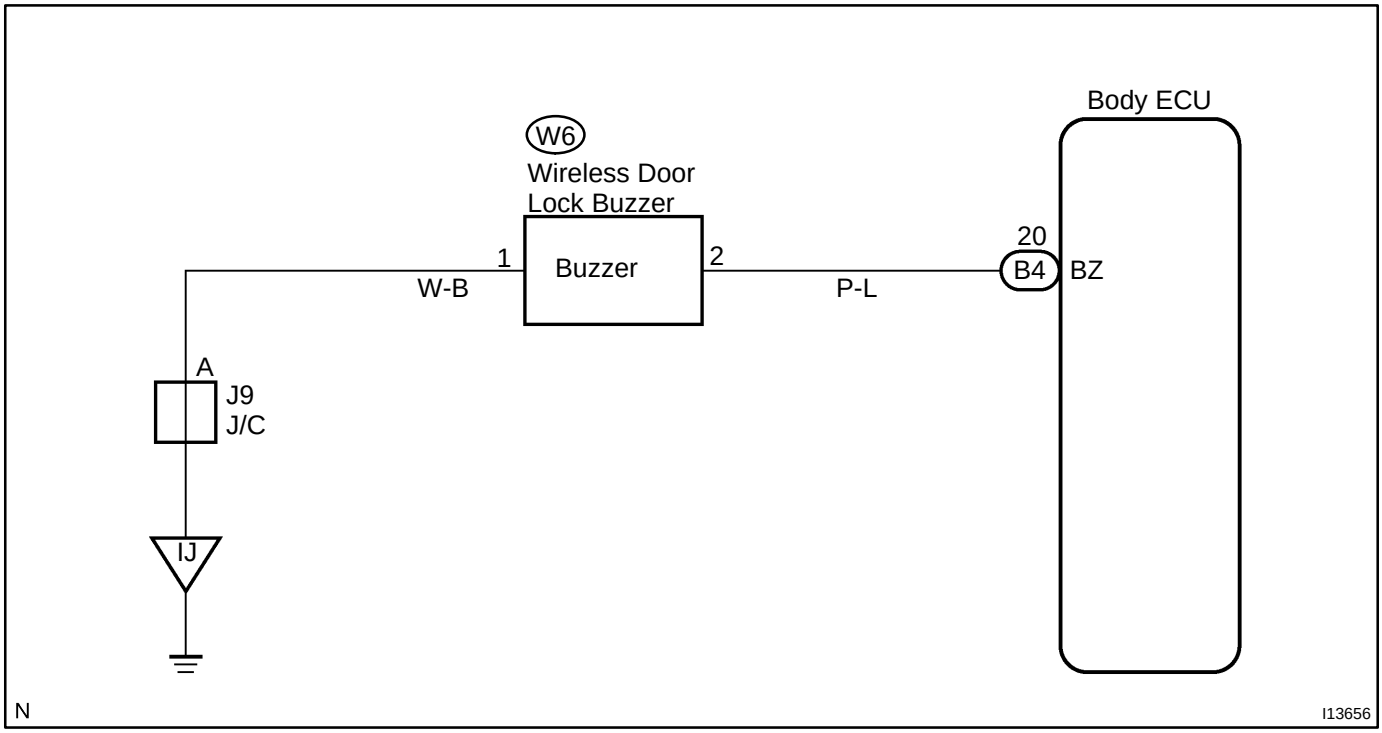

INSPECTION PROCEDURE

1	Check wireless door lock buzzer. (See page BE-91)

NG → Replace the wireless door lock buzzer.

OK

2	Check wireharness and connector between wireless door lock buzzer and Body ECU, Body ECU and wireless door lock buzzer (See page IN-30).

NG → Repair or replace wireharness or connector.

OK

Proceed to next circuit inspection shown on problem symptoms table (See page DI-622).

DI6LV-01

Wireless door lock tuner circuit

CIRCUIT DESCRIPTION

The signal from the transmitter will be input to the body ECU through RDA line. RDA line is diagnosed by the Body ECU, so check DTC also in case of the failure of the wireless function.

WIRING DIAGRAM

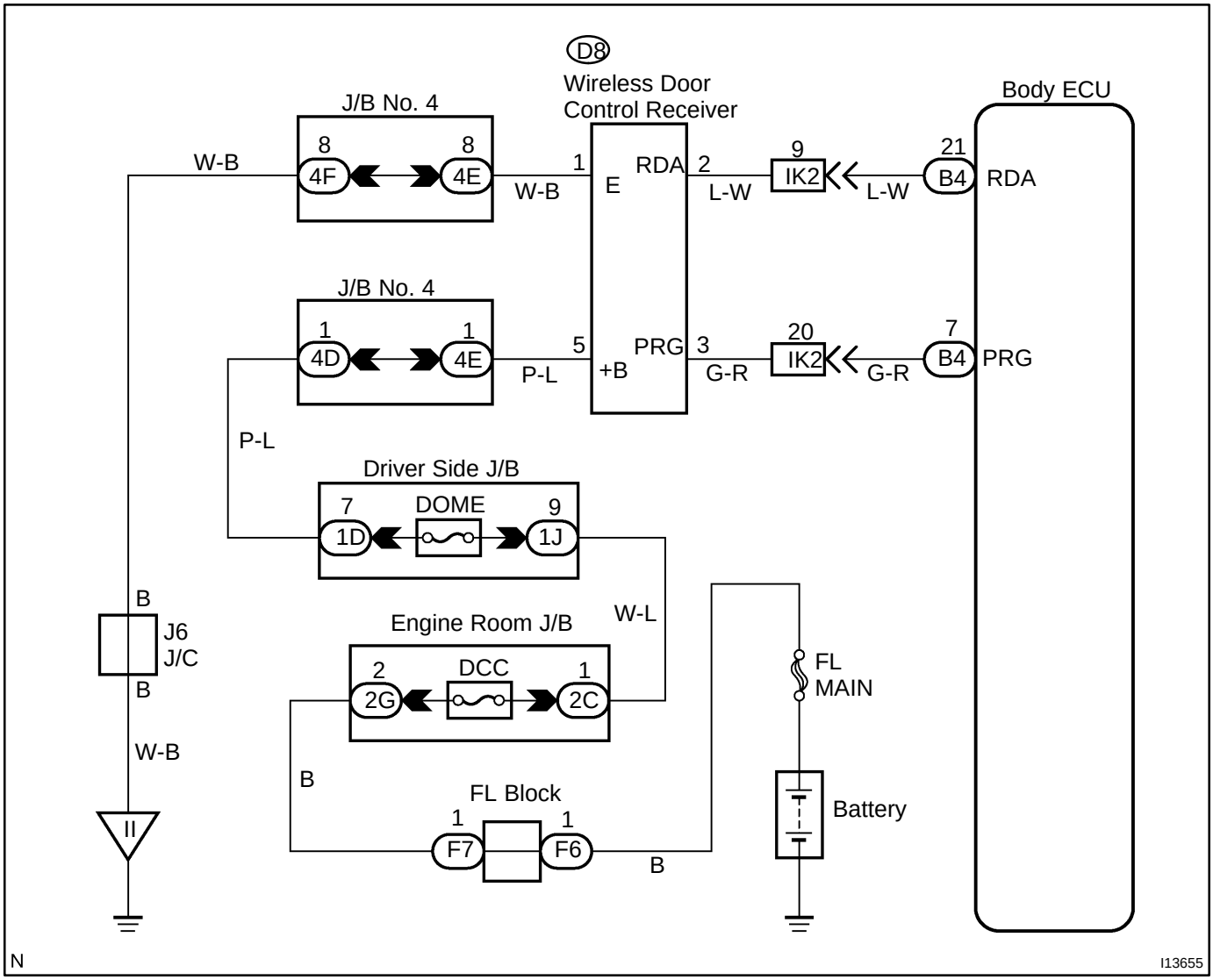

INSPECTION PROCEDURE

1	**Check that DTC 42 is not output.**

NG → **Check the RDA line.**

OK

2	**Check wireharness.**

PREPARATION:
Disconnect connectors of wireless door lock tuner and Body ECU.
CHECK:
Check continuity between terminals PRG of wireless door lock tuner and PRG of Body ECU.
OK:
Continuity

NG → **Repair or replace wireharness.**

OK

3	**Check the wireless door lock tuner.**

CHECK:
Replace the wireless door lock tuner and check if it recovers normally.
OK:
Must be recovered normally.

NG → **Proceed to next circuit inspection shown on problem symptoms table (See page DI-622).**

OK

Failure of the original wireless door lock tuner.

DI6LG-01

CUSTOMER PROBLEM ANALYSIS CHECK

BODY CONTROL SYSTEM Check Sheet

Inspector's name: _____

Customer's Name		**Registration No.**	
		Registration Year	
		Frame No.	
Date Vehicle Brought in	/ /	**Odometer Reading**	**km Mile**

Date Problem First Occurred		/ /
Frequency Problem Occurs		¿ Constant ¿ Sometimes (times per day, month) ¿ Once only
Weather Conditions When Problem Occurred	**Weather**	¿ Fine ¿ Cloudy ¿ Rainy ¿ Snowy ¿ Various/ Others
	Outdoor Temperature	¿ Hot ¿ Warm ¿ Cool ¿ Cold (Approx. °F (°C))

Malfunction System	¿ Key Unlock Warning System
	¿ Headlight and Taillight System (Light Auto Turn-of f system Daytime Running Light System)
	¿ Combination Meter
	¿ Luggage Compartment Door Opener System
	¿ Automatic Light Control System
	¿ Illuminated Entry System
	¿ Theft Deterrent System
	¿ Seat Belt Warning
	¿ Power Window Control System
	¿ Power Door Lock Control System
	¿ Auto Lock/Unlock System
	¿ Wireless Door Lock Control System
	¿ Others (Buzzer etc.)

BODY CONTROL SYSTEM

HOW TO PROCEED WITH TROUBLESHOOTING

DI6LF-01

HINT:

This ECU is connected to the multiplex communication system. Therefore, be sure to check that there is no troubles in the multiplex communication system before performing the trouble shooting.

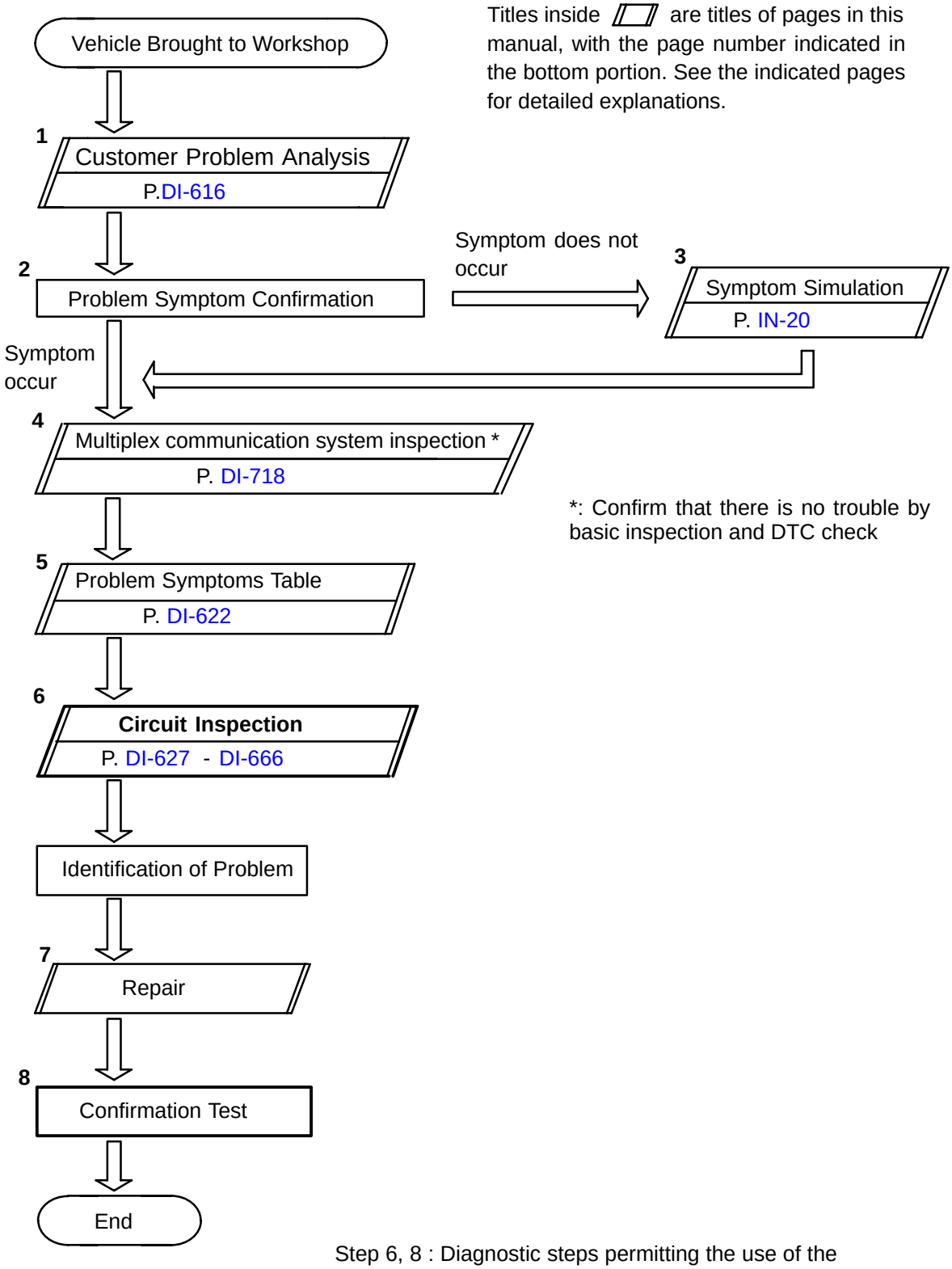

Step 6, 8 : Diagnostic steps permitting the use of the hand-held tester .

DI6LH-01

PARTS LOCATION

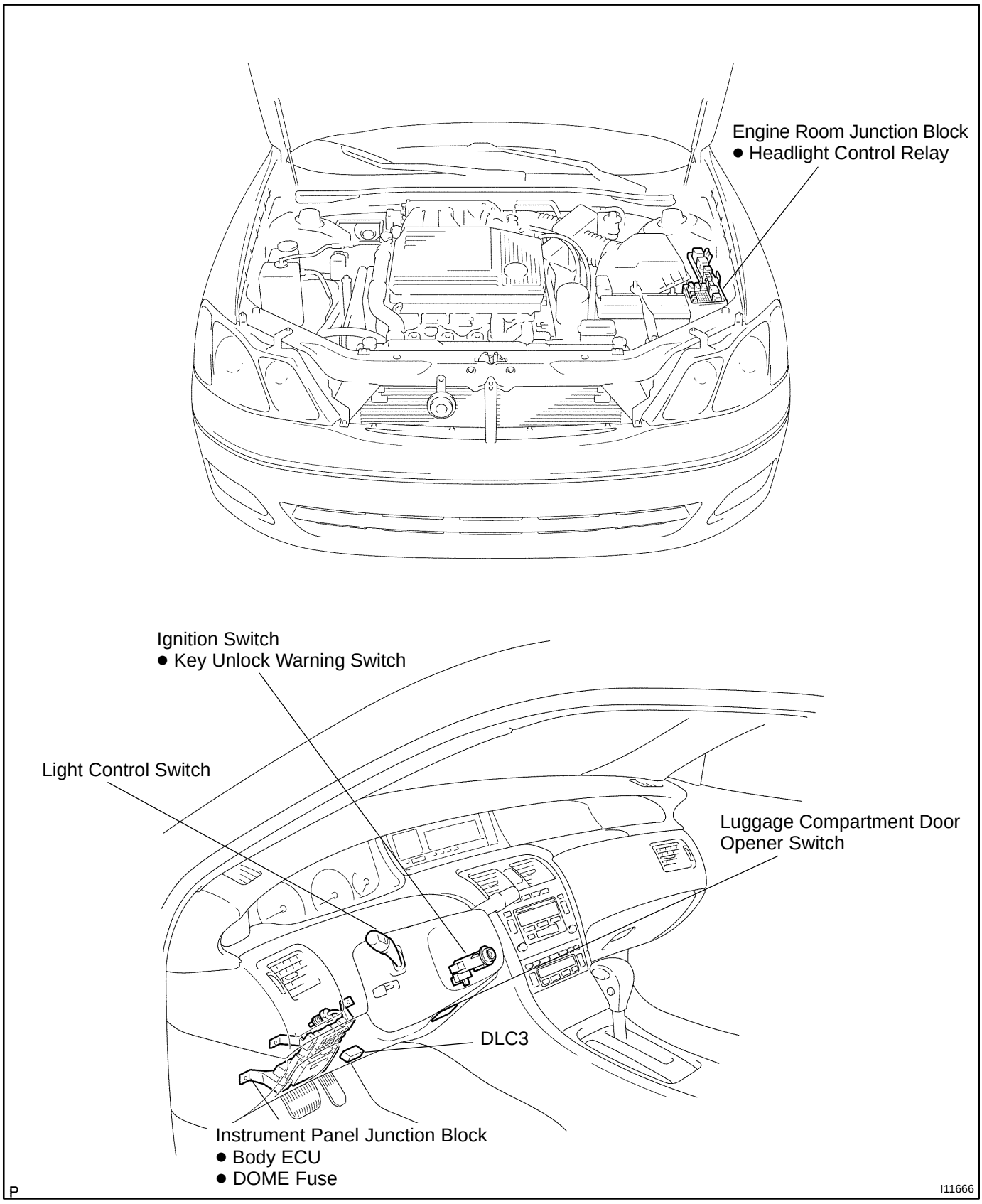

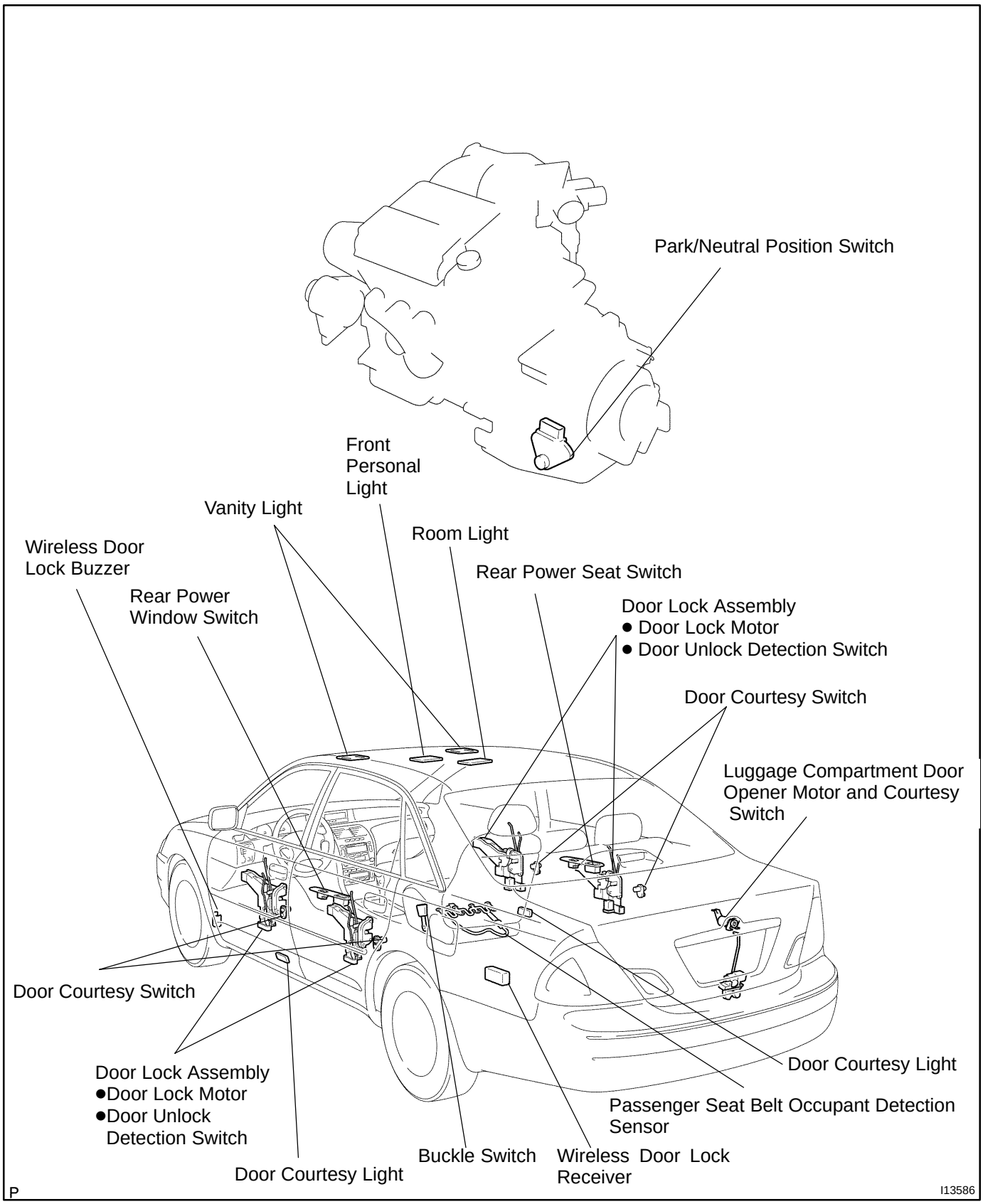
Park/Neutral Position Switch
Front Personal Light
Vanity Light
Room Light
Wireless Door Lock Buzzer
Rear Power Seat Switch
Rear Power Window Switch
Door Lock Assembly
● Door Lock Motor
● Door Unlock Detection Switch
Door Courtesy Switch
Luggage Compartment Door Opener Motor and Courtesy Switch
Door Courtesy Switch
Door Courtesy Light
Door Lock Assembly
●Door Lock Motor
●Door Unlock Detection Switch
Passenger Seat Belt Occupant Detection Sensor
Buckle Switch
Wireless Door Lock Receiver
Door Courtesy Light
P
I13586

DI6LJ-01

PROBLEM SYMPTOMS TABLE

IGNITION SWITCH AND KEY UNLOCK WARNING SWITCH:

Symptom	Suspect Area	See page
Ignition switch is not set to each position.	1. Ignition switch 2. Power source circuit	BE-16 DI-627
Key unlock warning system does not operate. (The buzzer does not sound when the driver's door is opened with the ignition OFF and key inserted)	1. Power source circuit 2. Key unlock warning switch circuit 3. Door courtesy switch circuit 4. Driver door ECU 5. Multiplex communication circuit 6. Body ECU 7. Wire harness	DI-627 DI-637 DI-639 DI-676 DI-718 IN-30 IN-30
Key unlock warning system does not operate. (The buzzer sounds when the ignition key is ACC or ON)	1. Ignition switch 2. Power source circuit 3. Wire harness	BE-16 DI-627 IN-30

HEADLIGHT AND TAILLIGHT SYSTEM (USA):

Symptom	Suspect Area	See page
Only one side headlight does not light.	1. HEAD-(LH, RH) fuse 2. Headlight bulb 3. Wire harness	BE-9 - IN-30
Headlight does not light.	1. HEAD-(LH, RH) fuse 2. Headlight control relay circuit 3. Light control switch circuit 4. Headlight bulb 5. Wire harness	BE-9 DI-635 DI-631 - IN-30
"Lo-Beam" does not light.	1. Headlight bulb 2. Headlight dimmer switch 3. Light control switch circuit 4. Wire harness	- DI-631 DI-631 IN-30
"Hi-Beam" does not light.	1. Headlight bulb 2. Headlight dimmer switch 3. Light control switch circuit 4. Wire harness	- DI-631 DI-631 IN-30
"Flash" does not light.	1. Headlight dimmer switch 2. Wire harness	DI-631 IN-30
Only one side taillight does not light.	1. Taillight bulb 2. Wire harness	- IN-30
Taillight does not light.	1. TAIL fuse 2. Taillight control relay circuit 3. Light control switch circuit 4. Body ECU 5. Wire harness	BE-9 DI-633 DI-631 IN-30 IN-30
Rear Combination light does not light.	1. Bulb 2. Light failure sensor 3. Wire harness	- BE-53 IN-30

HEADLIGHT AND TAILLIGHT SYSTEM (CANADA):

Symptom	Suspect Area	See page
Only one side headlight does not light.	1. Headlight bulb 2. HEAD LWR (LH, RH) fuse 3. Wire harness	- BE-9 IN-30
Headlight does not light.	1. Headlight bulb 2. Headlight control relay circuit 3. Light control switch circuit 4. Wire harness	- DI-635 DI-631 IN-30
”Lo-Beam” does not light.	1. Headlight bulb 2. HEAD LWR (LH, RH) fuse 3. Headlight control relay circuit 4. Headlight dimmer switch 5. Wire harness	- BE-9 DI-635 DI-631 IN-30
”Hi-Beam” does not light.	1. Headlight bulb 2. HEAD UPR (LH, RH) fuse 3. DRL fuse 4. D.R.L. relay No.2, 3 and 4 relay circuit 5. Headlight dimmer switch 6. Wire harness	- BE-9 BE-9 DI-668 DI-631 IN-30
”Flash” does not light.	1. Headlight bulb 2. HEAD UPR (LH, RH) fuse 3. DRL fuse (R/B No.7) 4. D.R.L. relay No.2, 3 and 4 relay circuit 5. Headlight dimmer switch 6. Wire harness	- BE-9 BE-9 DI-668 DI-631 IN-30
Headlight does not light with engine running and light control SW OFF.	1. DOME fuse 2. GAUGE fuse 3. DRL fuse 4. Parking brake switch circuit 5. Generator 6. Wire harness	BE-9 BE-9 BE-9 DI-670 CH-9 IN-30
Only one side taillight does not light.	1. Bulb 2. Wire harness	- IN-30
Taillight does not light.	1. TAIL fuse 2. Taillight control relay circuit 3. Light control switch circuit 4. Body ECU 5. Wire harness	BE-9 DI-633 DI-631 IN-30 IN-30
Rear Combination light does not light.	1. Taillight bulb 2. Light failure sensor 3. Wire harness	- BE-53 IN-30

AUTO TURN OFF SYSTEM:

Symptom	Suspect Area	See page
”Auto turn-off system” does not operate.	1. Drivers door courtesy switch circuit 2. Driver door ECU 3. Multiplex communication circuit 4. Body ECU	DI-639 DI-676 DI-718 IN-30

INTERIOR LIGHT SYSTEM:

Symptom	Suspect Area	See page
Only one light does not light up.	1. Bulb 2. Wire harness	- IN-30
Room light does not light up (All).	1. DOME fuse 2. Body ECU 3. Wire harness	BE-9 IN-30 IN-30
Room light does not light up (Room light only).	1. Bulb 2. Room light assembly 3. Wire harness	- BE-31 IN-30
”Illuminated Entry System” does not operate.	1. Illumination circuit 2. Door courtesy switch circuit 3. Door unlock detection switch circuit 4. Body ECU 5. Wire harness	DI-655 DI-639 DI-643 DI-686 DI-708 IN-30 IN-30
Front personal light does not light up.	1. Bulb 2. Front personal light 3. Body ECU 4. Wire harness	- BE-31 IN-30 IN-30
Rear personal light does not light up.	1. Bulb 2. Rear personal light	- BE-31
Vanity light does not light up.	1. Bulb 2. Vanity light 3. Wire harness	- BE-31 IN-30
Luggage room light does not light up.	1. Bulb 2. Luggage compartment light 3. Luggage compartment door courtesy switch circuit 4. Body ECU 5. Wire harness	- BE-31 BE-31 IN-30 IN-30

COMBINATION METER:

Symptom	Suspect Area	See page
Seat Belt warning light does not light up.	1. Warning light bulb 2. Buckle switch circuit 3. Body ECU 4. Meter circuit plate 5. Wire harness	BE-43 BE-53 IN-30 BE-43 IN-30
Open Door warning light does not light up.	1. DOME fuse 2. Warning light bulb 3. Door courtesy switch circuit 4. Illumination circuit 5. Meter circuit plate 6. Wire harness	BE-9 BE-43 DI-639 DI-655 BE-43 IN-30

POWER WINDOW CONTROL SYSTEM:

Symptom	Suspect Area	See page
All power window system does not operate.	1. Power main relay 2. Driver door control system 3. Passenger door control system	BE-73 DI-676 DI-677
Driver door window system dose not operate.	1. Driver door control ECU 2. Door lock motor circuit (Driver) 3. Body ECU 4. Wire harness	DI-692 DI-692 DI-641 -
Passenger door window system dose not operate.	1. Passenger door control ECU 2. Door lock motor circuit (Passenger) 3. Body ECU 4. Wire harness	DI-714 DI-714 DI-641 -
Rear power window control system does not operate. (Both left and right)	1. Body ECU 2. Wire harness	IN-30 IN-30
Rear power window control system does not operate. (Only one side)	1. Rear power window switch circuit 2. Body ECU 3. Wire harness	DI-645 IN-30 IN-30

POWER DOOR LOCK CONTROL SYSTEM:

Symptom	Suspect Area	See page
”Door lock system” does not operate at all.	1. GAUGE Fuse 2. DOOR Fuse 3. Driver door control ECU 4. Body ECU 5. Wire Harness	- - DI-676 IN-30 -
Door lock system does not operate by manual switch.	1. Driver door control ECU 2. Body ECU 3. Wire Harness	DI-676 IN-30 -
Door lock system does not operate by door key.	1. Door Key Lock and Unlock Switch circuit 2. Body ECU 3. Wire Harness 4. Door Lock Link Disconnected	DI-637 IN-30 - -
Fault in 2-Operation unlock function of Driver’s side door key lock and unlock switch.	1. Door Key Lock and Unlock Switch circuit 2. Body ECU 3. Wire Harness	DI-637 IN-30 -
Only one door lock does not operate.	1. Door Lock Motor circuit 2. Wire Harness	DI-641 -
Key confinement prevention function does not operate.	1. Key unlock warning switch circuit 2. Driver door control system 3. Passenger door control system	DI-637 DI-676 DI-677
Auto lock/unlock system does not operate.	1. Door lock motor circuit 2. Driver door control system 3. Passenger door control system	DI-641 DI-676 DI-677

LUGGAGE COMPARTMENT DOOR OPENER SYSTEM:

Symptom	Suspect Area	See page
Luggage compartment door opener system does not operate.	1. Luggage door switch circuit 2. Luggage door motor circuit 3. Body ECU	DI-647 DI-649 IN-30

WIRELESS DOOR LOCK CONTROL SYSTEM:

Symptom	Suspect Area	See page
All functions of wireless door lock control system do not operate.	1. Wireless door lock control receiver circuit 2. Key unlock warning switch circuit 3. Body ECU	DI-651 DI-637 IN-30
Lock or unlock function does not operate.	1. Door key lock and unlock switch circuit 2. Door unlock detection switch circuit 3. Body ECU	DI-688 DI-710 DI-686 DI-708 IN-30
Automatic lock function operates even if any door is opened within 30 seconds after all doors are unlocked by wireless door lock control system.	1. Door courtesy switch circuit 2. Body ECU	DI-639 IN-30
Wireless door lock operates, but the buzzer does not sound.	1. Wireless door lock buzzer circuit 2. Wireless door lock receiver circuit 3. Body ECU	DI-653 DI-651 IN-30
Buzzer sound, but wireless door lock function does not operate.	1. Wireless door lock receiver circuit 2. Body ECU	DI-651 IN-30
Luggage compartment door opener wireless function.	1. Luggage compartment door opener motor circuit 2. Body ECU	DI-649 IN-30

POWER MIRROR CONTROL SYSTEM:

Symptom	Suspect Area	See page
Mirror does not operate.	1. CIG/RAD fuse 2. Mirror switch circuit 3. Mirror motor 4. Body ECU 5. Wire harness	BE-9 DI-515 BE-114 IN-30 IN-30
Mirror operates abnormally.	1. Mirror switch circuit 2. Mirror motor 3. Body ECU 4. Wire harness	DI-515 BE-114 IN-30 IN-30

HORN SYSTEM:

Symptom	Suspect Area	See page
Horn system does not operate.	1. HORN fuse 2. Horn circuit 3. Wire harness	BE-9 DI-672 IN-30
Horns blow all the time.	1. Horn circuit 2. Wire harness	DI-672 IN-30
One horn operates but the other horn does not operate.	1. Horn circuit 2. Wire harness	DI-672 IN-30
Horns operate abnormally.	1. Horn circuit 2. Wire harness	DI-672 IN-30

DI6LI-01

TERMINALS OF ECU

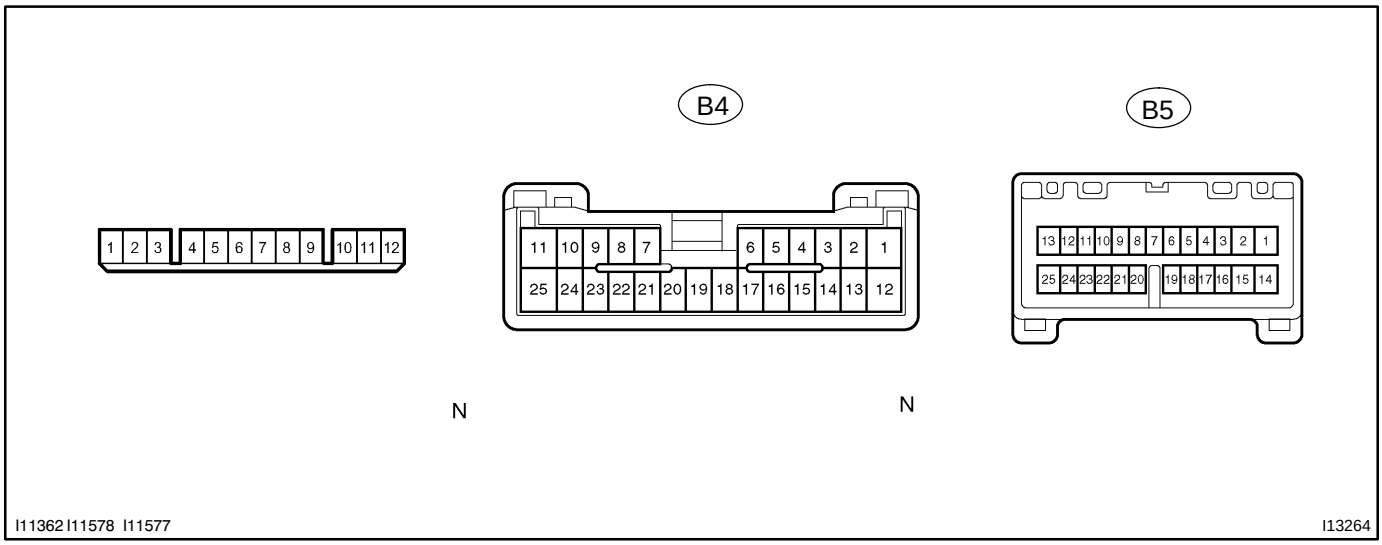

I11362 I11578 I11577 I13264

Terminal No. (Symbols)	Wring Color	Condition	STD Voltage (V)
1 ↔ B5-14 (BDR1 ↔ GND1)	- ↔ W-B	Constant	10 - 14 V
2 ↔ B5-14 (SIG ↔ GND1)	- ↔ W-B	Ignition switch OFF or ACC	Below 1 V
		Ignition switch ON	10 - 14 V
3 ↔ B5-14 (ACC ↔ GND1)	- ↔ W-B	Ignition switch OFF	Below 1 V
		Ignition switch ACC or ON	10 - 14 V
5 ↔ B5-14 (ILL ↔ GND1)	- ↔ W-B	Each door are opened	Below 1 V
		All door are closed	10 - 14 V
7 ↔ B5-14 (BDR2 ↔ GND1)	- ↔ W-B	Constant	10 - 14 V
8 ↔ B5-14 (HEAD ↔ GND1)	- ↔ W-B	Ignition switch ON and light control switch HEAD	Below 2 V
		Ignition switch ON and light control switch OFF	10 - 14 V
9 ↔ B5-14 (TRLY ↔ GND1)	- ↔ W-B	Ignition switch ON and light control switch TAIL	Below 2 V
		Ignition switch ON and light control switch OFF	10 - 14 V
10 ↔ B5-14 (HORN ↔ GND1)	- ↔ W-B	Horn switch position is ON	Below 1 V
		Horn switch position is OFF	10 - 14 V
11 ↔ B5-14 (STOP ↔ GND1)	- ↔ W-B	Brake pedal is pushed	10 - 14 V
		Brake pedal is released	Below 1 V
B4-1 ↔ B5-14 (P ↔ GND1)	G-W ↔ W-B	Park/neutral position switch is except P position	10 - 14 V
		Park/neutral position switch is P position	Below 1 V
B4-2 ↔ B5-14 (HF ↔ GND1)	B-W ↔ W-B	Headlight control switch position is FLASH	Below 1 V
		Headlight control switch position is except FLASH	10 - 14 V
B4-3 ↔ B5-14 (HEAD ↔ GND1)	R-Y ↔ W-B	Light control switch HEAD	Below 2 V
		Light control switch OFF or TAIL	10 - 14 V
B4-4 ↔ B5-14 (AUTO ↔ GND1)	G-O ↔ W-B	Light control switch AUTO	Below 2 V
		Light control switch OFF, TAIL or HEAD	10 - 14 V
B4-5 ↔ B5-14 (DCTY ↔ GND1)	R-L ↔ W-B	Driver door closed	10 - 14 V
		Driver door opened	Below 1 V
B4-6 ↔ B5-14 (LGC ↔ GND1)	R ↔ W-B	Luggage compartment door is opened	Below 1 V
		Luggage compartment door is closed	10 - 14 V

B4-7 ↔ B5-14 (PRG ↔ GND1)	G-R ↔ W-B	Wireless door lock receiver communication circuit	-
B4-8 ↔ B5-14 (RLD ↔ GND1)	Y-R ↔ W-B	Rear left side power window DOWN operation	Below 1 V
B4-9 ↔ B5-14 (MPX2 ↔ GND1)	G-W ↔ W-B	Multiplex communication circuit	-
B4-10 ↔ B5-14 (DRL ↔ GND1)	R-B ↔ W-B	Daytime running light system is operating	Below 1 V
		Constant	10 - 14 V
B4-11 ↔ Body ground (GND2 ↔ Body ground)	W-B	Constant	Below 1 V
B4-13 ↔ B5-14 (HU ↔ GND1)	B-R ↔ W-B	Headlight control switch position is HI beam or FLASH	Below 1 V
		Headlight control switch position is except HI beam or FLASH	10 - 14 V
B4-14 ↔ B5-14 (TAIL ↔ GND1)	P ↔ W-B	Light control switch TAIL or HEAD	Below 2 V
		Light control switch OFF	10 - 14 V
B14-15 ↔ B5-14 (PKB ↔ GND1)	Y-G ↔ W-B	Parking brake is used	Below 1 V
		Parking brake is not used	10 - 14 V
B4-16 ↔ B5-14 (DBKL ↔ GND1)	R-W ↔ W-B	With seat belt ON	Below 1 V
		No seat belt ON	10 - 14 V
B4-17 ↔ B5-14 (KSW ↔ GND1)	R-Y ↔ W-B	Key is inserted	Below 1 V
		Key is not inserted	10 - 14 V
B4-18 ↔ B5-14 (TC ↔ GND1)	LG-R ↔ W-B	DLC3 communication circuit	-
B4-19 ↔ B5-14 (GSW ↔ GND1)	L ↔ W-B	Normal condition	2 - 3.5 V
		When wire harness is open	4 - 6 V
B4-20 ↔ B5-14 (BZ ↔ GND1)	P-L ↔ W-B	Buzzer sound	10 - 14 V
		Buzzer does not sound	Below 1 V
B4-21 ↔ B5-14 (RDA ↔ GND1)	L-W ↔ W-B	Wireless door lock control system is operated	Below 1 V
		Wireless door lock control system is not operated	10 - 14 V
B4-22 ↔ B5-14 (RLU ↔ GND1)	G-Y ↔ W-B	Rear left side power window UP operation	Below 1 V
B4-23 ↔ B5-14 (MPX1 ↔ GND1)	V ↔ W-B	Multiplex communication circuit	-
B4-24 ↔ B5-14 (B ↔ GND1)	W-G ↔ W-B	Constant	10 - 14 V
B4-25 ↔ B5-14 (TR+ ↔ GND1)	L ↔ W-B	Luggage compartment door opener switch is operated	Below 1 V
		Luggage compartment door opener switch is not operated	10 - 14 V
B5-1 ↔ B5-14 (ACTD ↔ GND1)	L-W ↔ W-B	Driver door lock is operating	10 - 14 V
B5-2 ↔ B5-15 (ACT+ ↔ ACT-)	L-R ↔ L	Door lock is operating	10 - 14 V
B5-3 ↔ B5-14 (PCTY ↔ GND1)	O ↔ W-B	Driver door closed	10 - 14 V
		Driver door opened	Below 1 V
B5-4 ↔ B5-14 (SEAT ↔ GND1)	W-R ↔ W-B	Passenger seat switch OFF	10 - 14 V
		Passenger seat switch ON	Below 1 V
B5-5 ↔ B5-14 (LSW ↔ GND1)	L-O ↔ W-B	Rear door locked	Below 2 V
		Rear door unlocked	10 - 14 V

B5-6 ↔ B5-14 (ALTL ↔ GND1)	R-L ↔ W-B	Ignition switch ON	10 - 14 V
		Engine running	Below 1 V
B5-7 ↔ B5-14 (CLTE ↔ GND1)	Y-B ↔ W-B	Automatic light control sensor communication circuit	-
B5-8 ↔ B5-14 (CLTS ↔ GND1)	LG ↔ W-B	Automatic light control sensor communication circuit	-
B5-9 ↔ B5-14 (MPX3 ↔ GND1)	R-Y ↔ W-B	Multiplex communication circuit	-
B5-10 ↔ B5-14 (RRU ↔ GND1)	G-B ↔ W-B	Rear right side power window UP operation	Below 1 V
B5-11 ↔ B5-14 (PBEW ↔ GND1)	G-R ↔ W-B	Passenger seat belt unfastened	Below 1 V
		Passenger seat belt fastened	10 - 14 V
B5-13 ↔ Body ground (CLTC ↔ Body ground)	W-B ↔ Body ground	Constant	Below 1 V
B5-14 ↔ Body ground (GND1 ↔ Body ground)	W-B ↔ -	Constant	Below 1 V
B5-16 ↔ B5-14 (RCTY ↔ GND1)	R-W ↔ W-B	Rear door closed	10 - 14 V
		Rear door opened	Below 1 V
B5-17 ↔ B5-14 (PBKL ↔ GND1)	G ↔ W-B	Passenger seat belt unfastened	Below 1 V
		Passenger seat belt fastened	10 - 14 V
B5-18 ↔ B5-14 (TKU ↔ GND1)	L-B ↔ W-B	Luggage compartment door opener switch is operated	Below 1 V
		Luggage compartment door opener switch is not operated	10 - 14 V
B5-20 ↔ B5-14 (CLTB ↔ GND1)	L ↔ W-B	Automatic light control sensor communication circuit	-
B5-21 ↔ B5-14 (MPX4 ↔ GND1)	G-B ↔ W-B	Multiplex communication circuit	-
B5-22 ↔ B5-14 (RRD ↔ GND1)	R-B ↔ W-B	Rear right side power window DOWN operation	Below 1 V
B5-23 ↔ B5-14 (DBEW ↔ GND1)	G-W ↔ W-B	Passenger seat belt unfastened	Below 1 V
		Passenger seat belt fastened	10 - 14 V
B5-25 ↔ B5-14 (AJAR- ↔ GND1)	R ↔ W-B	Each door closed	10 - 14 V
		Each door opened	Below 1 V

DI08M-14

CIRCUIT INSPECTION

DTC	11, 15	Actuator Motor Circuit

CIRCUIT DESCRIPTION

The actuator motor is operated by signals from the ECU. Acceleration and deceleration signals are transmitted according to changes in the Duty Ratio (See below).

Duty Ratio

The duty ratio is the ratio of the period of continuity in one cycle. For example, if A is the period of continuity in one cycle, and B is the period of non-continuity.

$$\text{Duty Ratio} = \frac{A}{A + B} \times 100\ (\%)$$

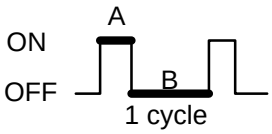

DTC No.	Detection Item	Trouble Area
11	Short in actuator motor circuit.	●Actuator motor ●Harness or connector between cruise control ECU and actuator motor ●Cruise control ECU
15	Open in actuator motor circuit.	●Actuator motor

WIRING DIAGRAM

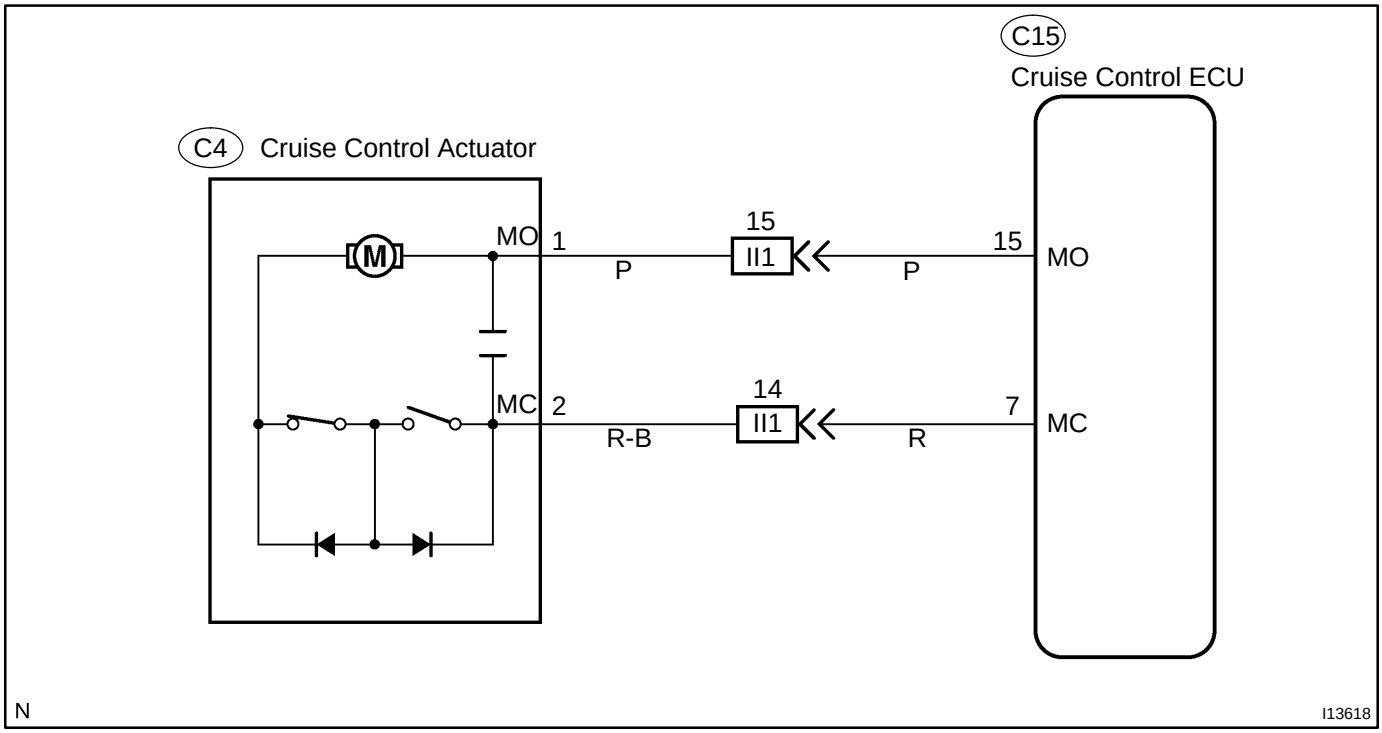

INSPECTION PROCEDURE

1	**Check resistance between terminals MO and MC of actuator motor.**

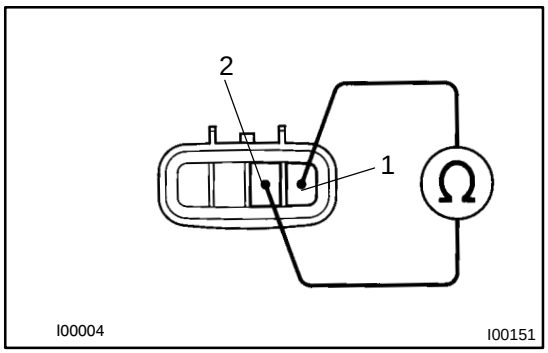

PREPARATION:

(a) Turn ignition switch OFF.

(b) Disconnect the actuator connector.

CHECK:

Measure resistance between terminals 1 and 2.

HINT:

If control plate is in fully opened or fully closed positions, resistance can not be measured.

OK:

Resistance: more than 4.2 Ω

NG → **Replace cruise control actuator.**

OK

2	**Check for open and short in harness and connectors between cruise control ECU and actuator motor (See page IN-30).**

NG → **Repair or replace harness or connector.**

OK

Check and replace cruise control ECU (See page IN-30).

DI08N-15

DTC	12	Actuator Magnetic Clutch Circuit

CIRCUIT DESCRIPTION

This circuit turns on the magnetic clutch inside the actuator during cruise control operation according to the signal from the ECU. If a malfunction occurs in the actuator or speed sensor, etc. during cruise control operation, the rotor shaft between the motor and control plate is released.
When the brake pedal is depressed, the stop light switch turns on, supplying electrical power to the stop light. Power supply to the magnetic clutch is mechanically cut and the magnetic clutch is turned OFF.
When driving downhill, if the vehicle speed exceeds the set speed by 15 km/h (9 mph), the ECU turns the safety magnet clutch OFF. If the vehicle speed later drops to within 10 km/h (6 mph), cruise control at the set speed is resumed.

DTC No.	Detection Item	Trouble Area
12	Short in actuator magnetic clutch circuit. Open (0.8 sec.) in actuator magnetic clutch circuit.	●STOP Fuse ●Stop light switch ●Actuator magnetic clutch ●Harness or connector between cruise control ECU and actuator magnetic clutch, actuator magnetic clutch and body ground ●Cruise control ECU

WIRING DIAGRAM

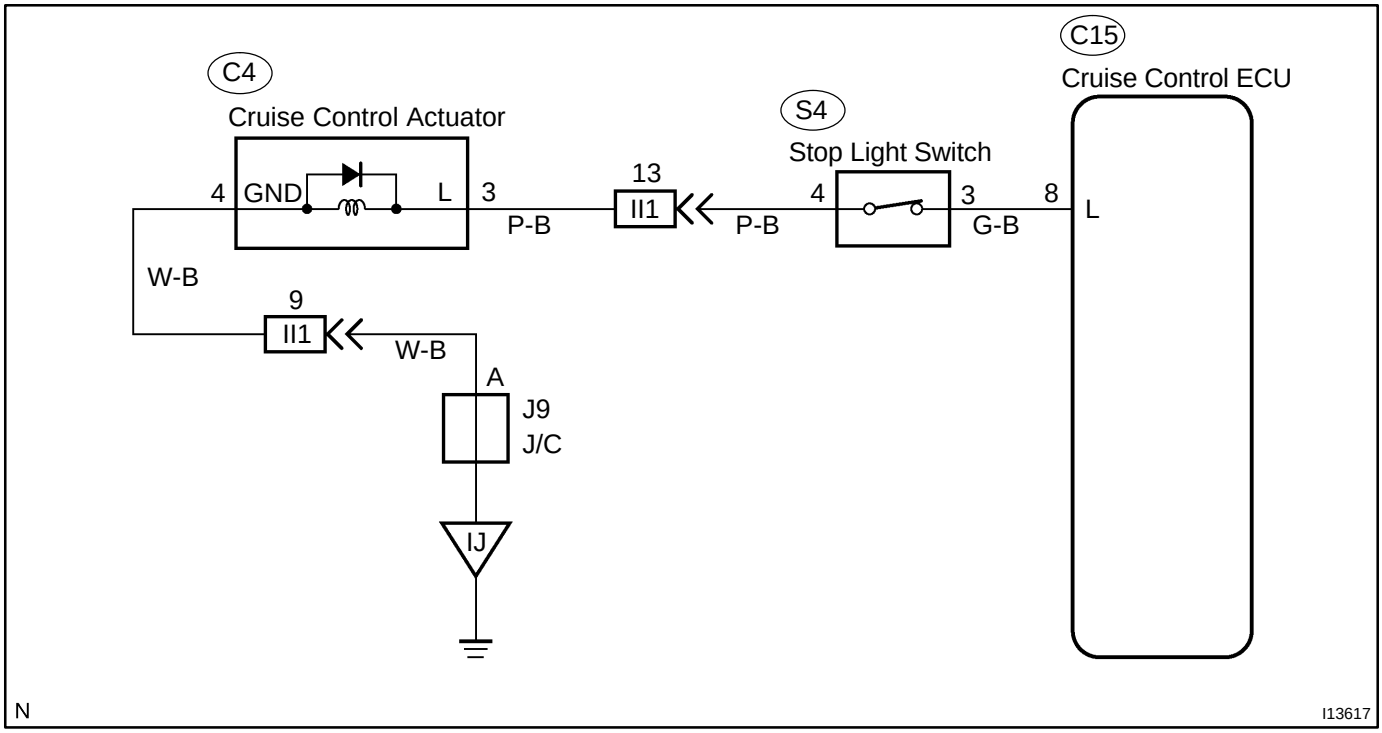

INSPECTION PROCEDURE

1	Check STOP fuse.

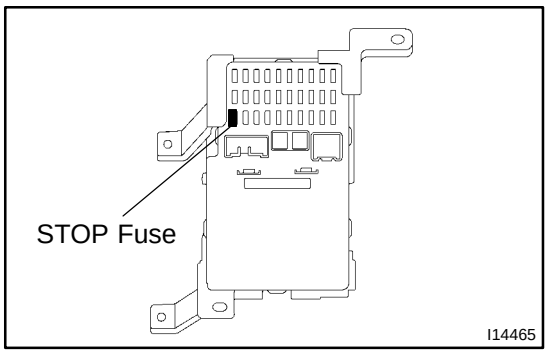

PREPARATION:

(a) Turn ignition switch OFF.

(b) Remove the STOP fuse from instrument panel junction block.

CHECK:

Check fuse continuity.

OK:

There is continuity.

NG → **Replace STOP fuse.**

OK

2	Check stop light switch.

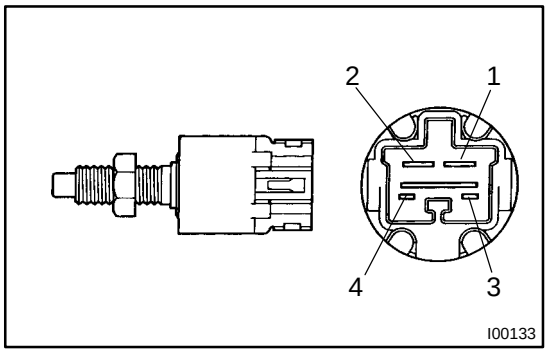

PREPARATION:

Disconnect the stop light switch connector.

CHECK:

Check continuity between terminals.

Switch position	Continuity
Switch pin free (Brake pedal depressed)	1 - 2
Switch pin pushed in (Brake pedal released)	3 - 4

NG → **Replace stop light switch.**

OK

3	**Check resistance between terminals L and GND of actuator magnetic clutch.**

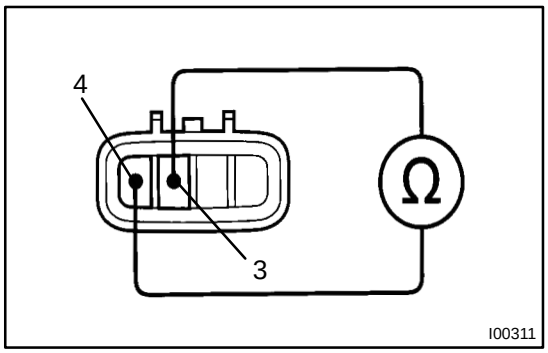

PREPARATION:

(a) Turn ignition switch OFF.

(b) Disconnect the actuator connector.

CHECK:

Measure resistance between terminals 3 and 4.

OK:

Resistance: 34.65 - 42.35 Ω.

NG → **Replace cruise control actuator.**

OK

4	**Check for open and short in harness and connectors between cruise control ECU and actuator magnetic clutch, actuator magnetic clutch and body ground (See page IN-30).**

NG → **Repair or replace harness or connector.**

OK

Check and replace cruise control ECU (See page IN-30).

DI08O-14

DTC	14	Actuator Mechanical Malfunction

CIRCUIT DESCRIPTION

The circuit detects the rotation position of the actuator control plate and sends a signal to the ECU.

DTC No.	Detection Item	Trouble Area
14	Cruise control actuator mechanical malfunction.	●Actuator lock: (motor, arm) ●Actuator motor ●Cruise control ECU

WIRING DIAGRAM

See page DI-563 .

INSPECTION PROCEDURE

1	Check cruise control actuator arm locking operation

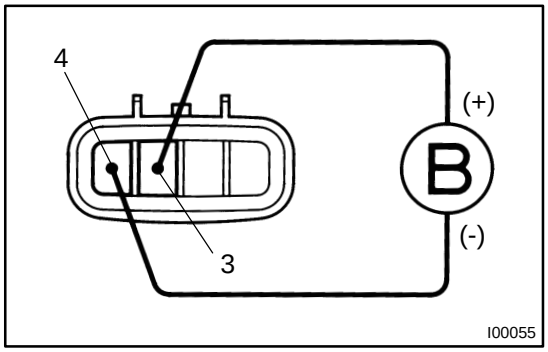

PREPARATION:

(a) Turn ignition switch OFF.

(b) Disconnect the actuator connector.

CHECK:

(a) Connect the positive (+) lead from the battery to the terminal 3 of actuator and the negative (-) lead to terminal 4.

NOTICE:

Do not connect the high tension cables to the wrong battery terminal. The cruise control actuator will be damaged.

(b) Move the control plate by hand.

OK:

Control plate doesn't move.

NG → **Replace cruise control actuator.**

OK

2	Check cruise control actuator operation.

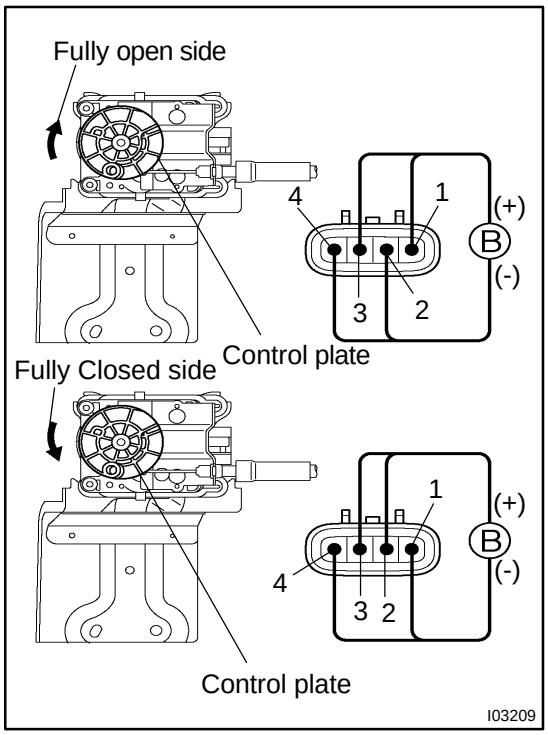

PREPARATION:

(a) Turn ignition switch OFF.

(b) Disconnect the actuator connector.

CHECK:

Connect the positive (+) lead from the battery to terminals 1 and 3 of actuator, connect the negative (-) lead to terminals 2 and 4 of actuator.

OK:

Control arm moves to fully open side

CHECK:

Connect the positive (+) lead from the battery to terminals 2 and 3 of actuator, connect the negative (-) lead to terminals 1 and 4 of actuator.

OK:

Control arm moves to fully colsed side

NG → **Replace cruise control actuator.**

OK

3	Check harness and connector between cruise control ECU and cruise control actuator (See page IN-30).

NG → **Repair or replace harness or connector.**

OK

Check and replace cruise control ECU (See page IN-30).

DI08P-18

DTC	21	Open in Vehicle Speed Sensor Circuit

CIRCUIT DESCRIPTION

The signal from the vehicle speed sensor circuit is sent to cruise control ECU as vehicle speed signal.
The rotor shaft is driven by the gear of the transmission.
For each rotation of the shaft, the vehicle speed sensor sends a 4-pulse signal through the combination meter to the cruise control ECU (See the following installation).
This signal is converted inside the combination meter and sent as a 4-pulse signal to the cruise control ECU.
The ECU calculates the vehicle speed from this pulse frequency.

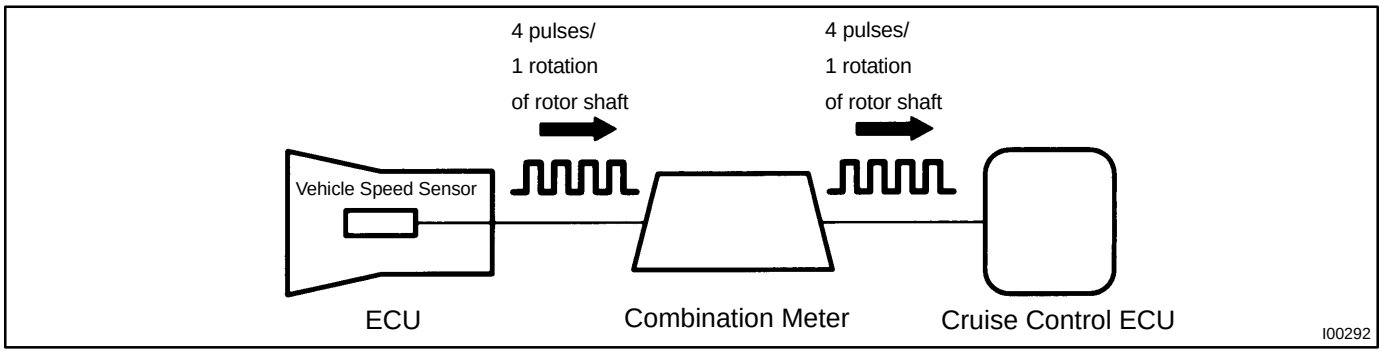

DTC No.	Detection Item	Trouble Area
21	Speed signal is not input to the cruise control ECU while cruise control is set.	●Combination meter ●Harness or connector between cruise control ECU and combination meter, combination meter and vehicle speed sensor ●Vehicle speed sensor ●Cruise control ECU

WIRING DIAGRAM

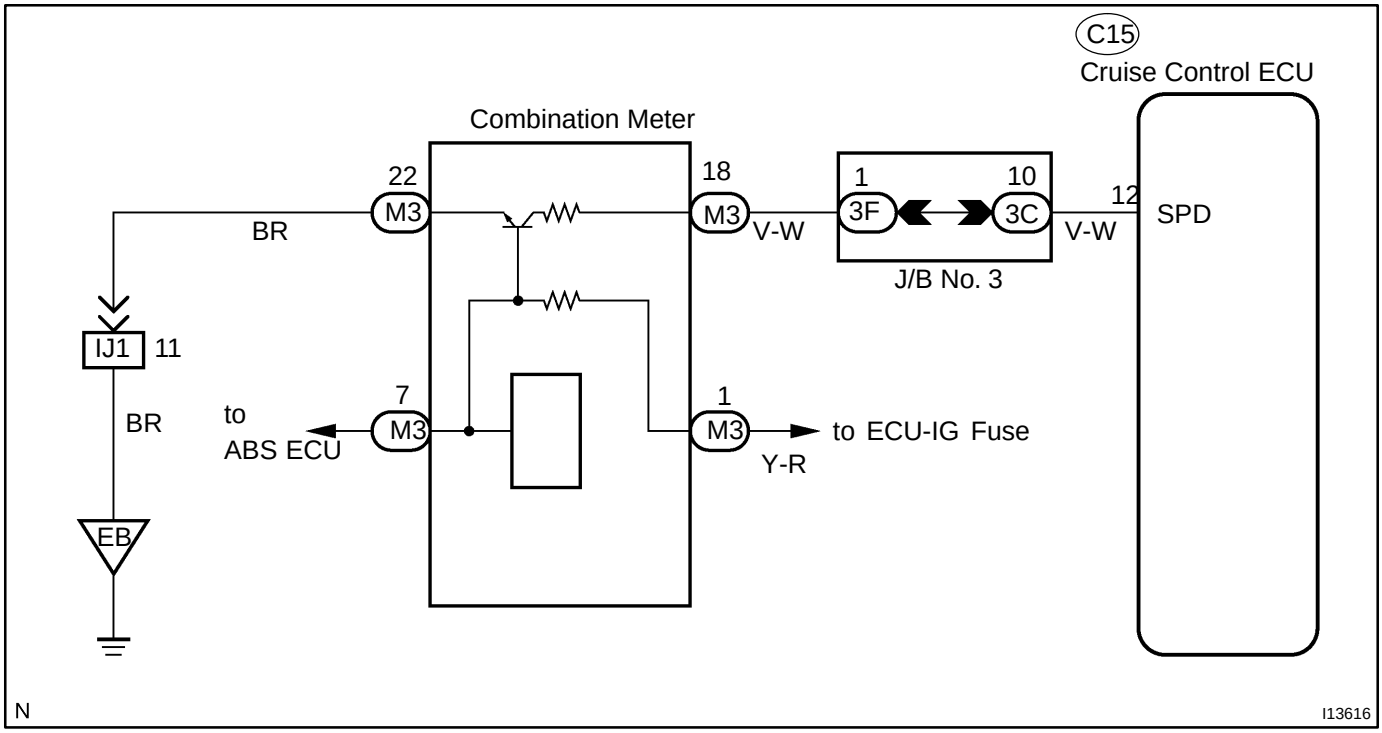

INSPECTION PROCEDURE

1	**Input signal check.**

Input Signal	Indicator Light Blinking Pattern
Drive at about 40 km/h (25 mph) or below	Light: ON — OFF
Drive at about 40 km/h (25 mph) or higher	Light: ON / OFF (blinking)

CHECK:

(a) See input signal check on page DI-551 .

(b) Check indicator light operation when driving with vehicle speed above 40 km/h (25 mph), and with vehicle speed below 40 km/h (25 mph).

OK:

Vehicle speed above 40 km/h (25 mph):
Indicator light blinks

Vehicle speed below 40 km/h (25 mph):
Indicator light stays on

OK → **Check and replace cruise control ECU (See page IN-30).**

NG

2	**Check speedometer circuit (See Combination meter troubleshooting on page BE-2).**

NG → **Repair or replace harness, connector or combination meter assembly.**

OK

3	**Check harness and connector between cruise control ECU and combination meter, combination meter and vehicle speed sensor (See page IN-30).**

NG → **Repair or replace harness or connector.**

OK

4	Check vehicle speed sensor (See page BE-53).

NG → Replace vehicle speed sensor.

OK →

Check and replace cruise control ECU (See page IN-30).

DI08Q-13

DTC	23	Vehicle Speed Signal Abnormal

CIRCUIT DESCRIPTION

See page DI-568 .

DTC No.	Detection Item	Trouble Area
23	Vehicle speed sensor pulse is abnormal.	●Vehicle speed sensor ●Cruise control ECU

WIRING DIAGRAM

See page DI-568 .

INSPECTION PROCEDURE

1	**Check vehicle speed sensor (See page BE-53).**

NG → **Replace vehicle speed sensor.**

OK

Check and replace cruise control ECU (See page IN-30).

DI08R-16

DTC	32	Control Switch Circuit (Cruise Control Switch)

CIRCUIT DESCRIPTION

This circuit carries the SET/COAST, RESUME/ACCEL and CANCEL signals (each voltage) to the ECU.

DTC No.	Detection Item	Trouble Area
32	Short in control switch circuit.	●Cruise control switch ●Harness or connector between cruise control ECU and cruise control switch, cruise control switch and body ground ●Cruise control ECU

WIRING DIAGRAM

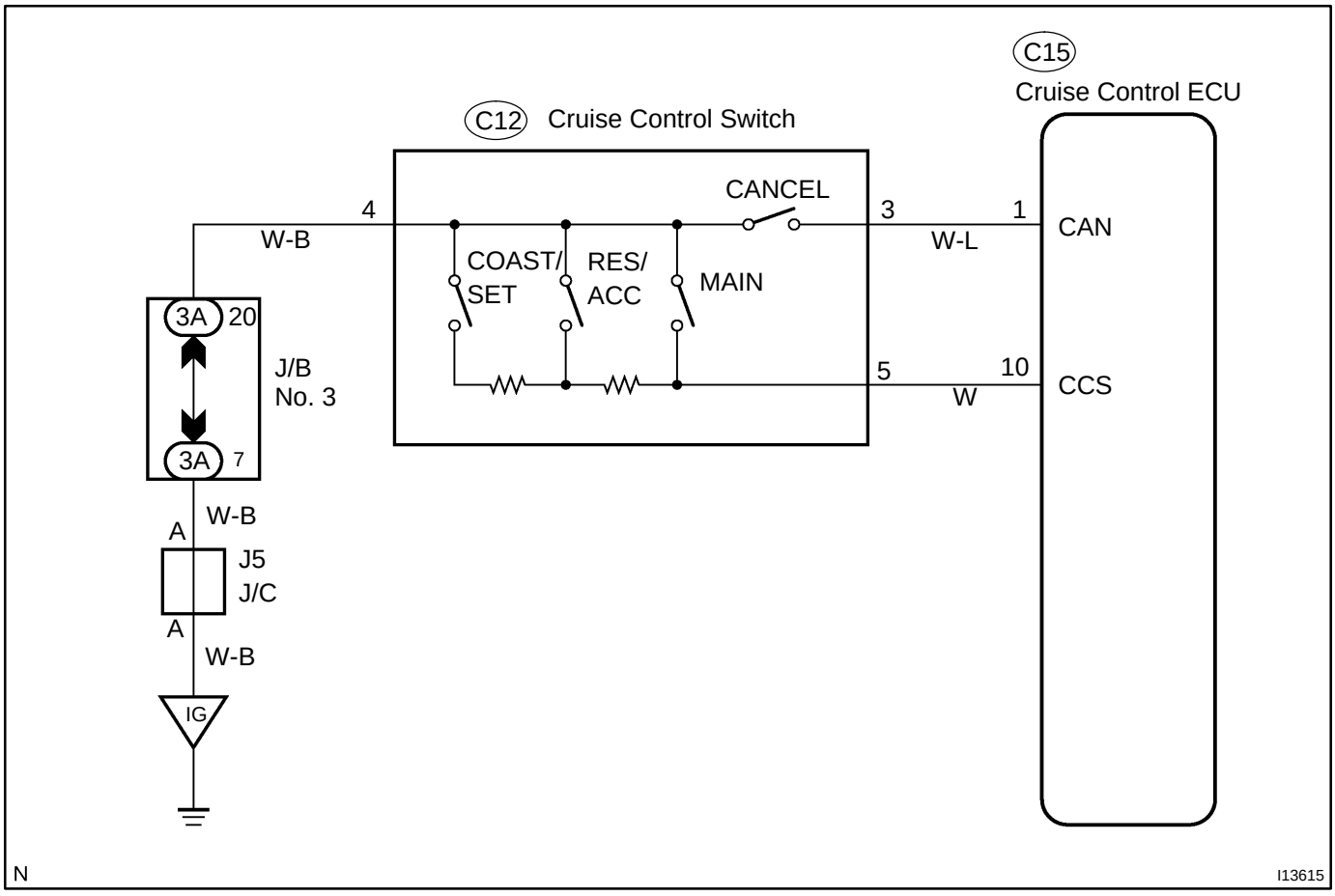

INSPECTION PROCEDURE

1	Input signal check.

Input Signal	Indicator Light Blinking Pattern
SET/COAST switch	2 Pulses: ON / OFF
RESUME/ACCEL switch	3 Pulses: ON / OFF
CANCEL switch	SW OFF, SW ON: ON / OFF

PREPARATION:

See input signal check on page DI-551 .

CHECK:

Check the indicator light operation when each of the SET/COAST, RESUME/ACCEL and CANCEL is turned on.

OK:

SET/COAST, RESUME/ACCEL switch

The signals shown in the table on the left should be output when each switch is ON. The signal should disappear when the switch is turned OFF.

CANCEL switch

The indicator light goes off when the cancel switch is turned ON.

OK	Wait and see.

NG

2	Check voltage between terminals CCS of cruise control ECU connector and body ground.

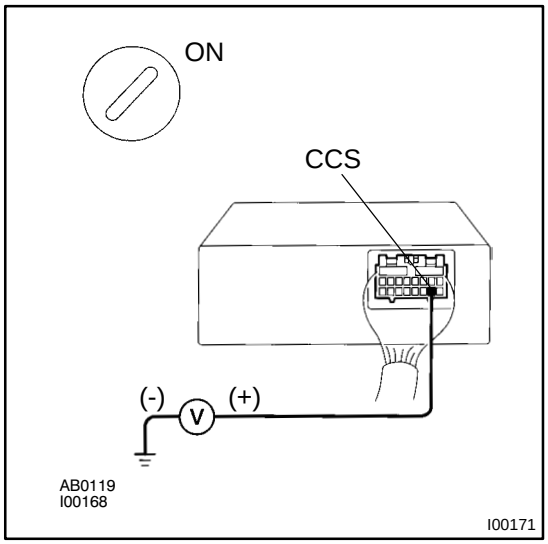

PREPARATION:

(a) Remove the ECU with connector still connected.

(b) Turn ignition switch ON.

CHECK:

Measure voltage between terminals 18 of ECU connector and body ground, when each of the SET/COAST, RESUME/ACCEL and CANCEL is turned ON.

Switch position	Resistance (V)
Neutral	10 - 16 V
MAIN	Below 1V
REST/ACC	4.7 - 7.7 V
SET/COAST	2.6 - 4.2 V

NG	Proceed to next circuit inspection shown in problem symptom table (See page DI-560)

OK

3	**Check control switch.**

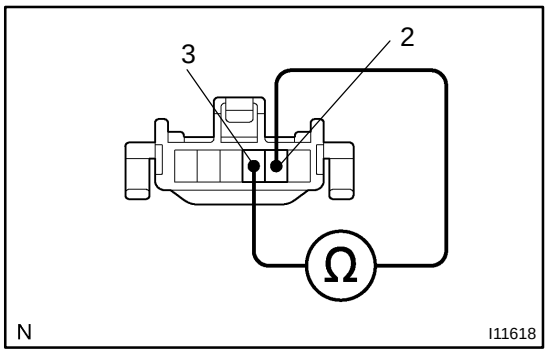

PREPARATION:

(a) Remove steering wheel center pad.

(b) Disconnect the control switch connector.

CHECK:

Measure resistance between terminals 2 and 3 of control switch connector when control switch is operated.

Switch position	Resistance (Ω)
Neutral	∞ (No continuity)
MAIN	0 Ω (Continuity)
RES/ACC	240
SET/COAST	630

NG → **Replace control switch.**

OK

4	**Check harness and connector between cruise control ECU and cruise control switch, cruise control switch and body ground (See page IN-30).**

NG → **Repair or replace harness or connector.**

OK

5	**Input signal check (See step 1).**

OK → **Wait and see.**

NG

Check and replace cruise control ECU (See page IN-30).

DI6L6-01

DTC	51	Idle Signal Circuit

CIRCUIT DESCRIPTION

When the idle switch is turned ON, a signal is sent to the ECU. The ECU uses this signal to correct the discrepancy between the throttle valve position and the actuator position sensor value to enable accurate cruise control at the set speed. If the idle switch is malfunctioning, problem symptoms also occur in the engine, so also inspect the engine.

DTC No.	Detection Item	Trouble Area
51	Short in idle signal circuit.	●Harness or connector between ECM and throttle position sensor ●Throttle position sensor ●Harness or connector between cruise control ECU and ECM ●Cruise control ECU

WIRING DIAGRAM

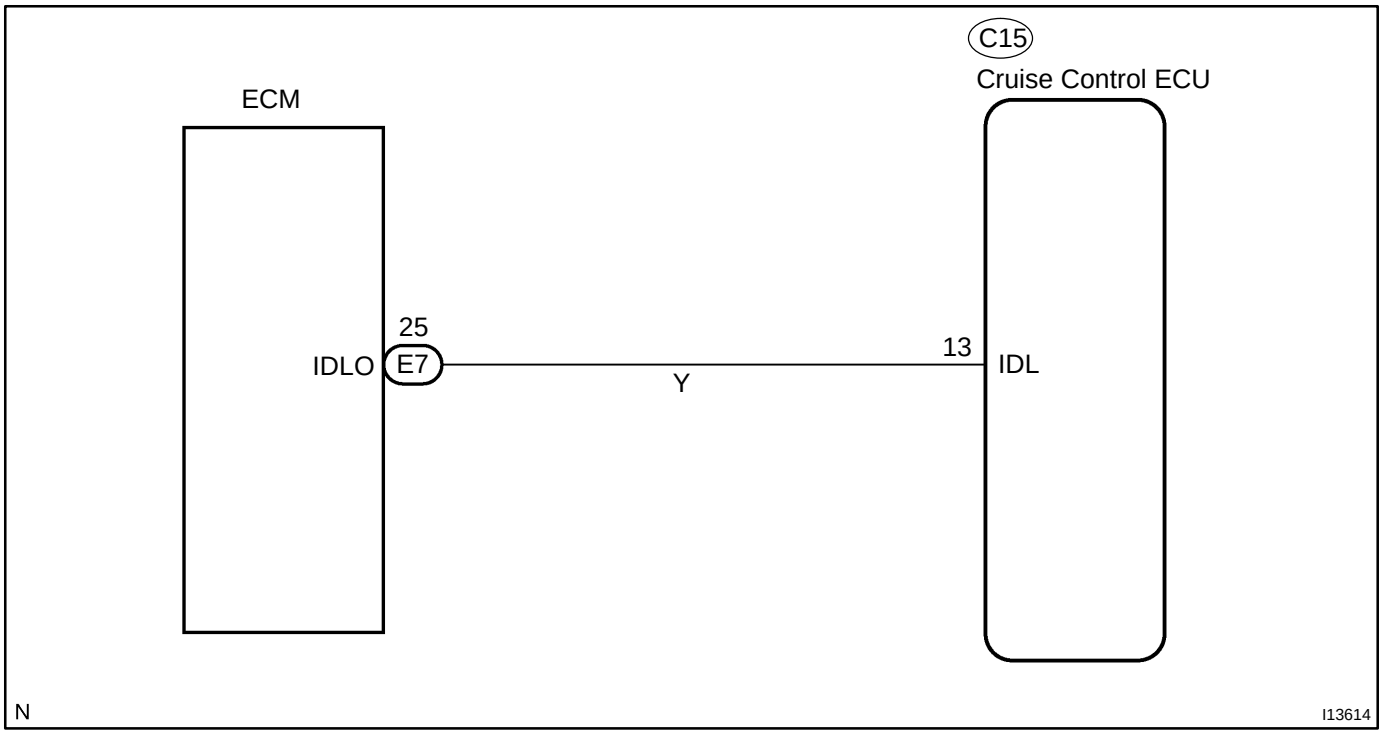

INSPECTION PROCEDURE

1	**Check voltage between terminal IDL of cruise control ECU connector and body ground.**

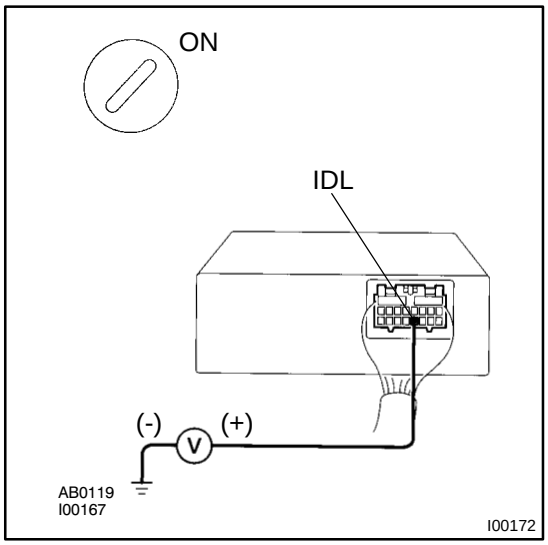

PREPARATION:

(a) Remove the ECU with connector still connected.
(b) Disconnect the ECM connector.
(c) Turn ignition switch ON.

CHECK:

Measure voltage between terminal IDL of ECU connector and body ground when the throttle valve is fully closed and fully opened.

OK:

Throttle valve position	Voltage
Fully opened	10 - 14 V
Fully closed	Below 2 V

OK → **Proceed to next circuit inspection shown in problem symptom table (See page DI-560).**

NG

2	**Check harness and connector between ECM and throttle position sensor (See page IN-30).**

NG → **Repair or replace harness or connector.**

OK

3	**Check throttle position sensor circuit (See page DI-38).**

NG → **Replace throttle position sensor.**

OK

4	**Check throttle position sensor.**

NG → **Replace throttle position sensor.**

OK

5	**Check for open and short in harness and connector between cruise control ECU and ECM (See page IN-30).**

NG → **Repair or replace harness or connector.**

OK

Check and replace cruise control ECU (See page IN-30).

DI6L9-01

Actuator Control Cable

INSPECTION PROCEDURE

1	**Actuator control cable inspection**

OK:

(a) Check that the actuator and control cable throttle link are properly installed and that the cable and link are connected correctly.

(b) Check that the actuator and bell crank operate smoothly.

(c) Check that the cable is not loose or too tight.

OK:

Freeplay: less than 10 mm

HINT:

- If the control cable is very loose, the vehicle's loss of speed going uphill will be large.
- If the control cable is too tight, the idle RPM will become high.

DI6L8-01

Cancel Switch Circuit (Cruise Control Switch)

CIRCUIT DESCRIPTION

When the cruise control cancel switch is turned ON, the cruise control does not operate.

WIRING DIAGRAM

See page DI-572 .

INSPECTION PROCEDURE

1	**Check voltage between terminal CAN of cruise control ECU connector and body ground.**

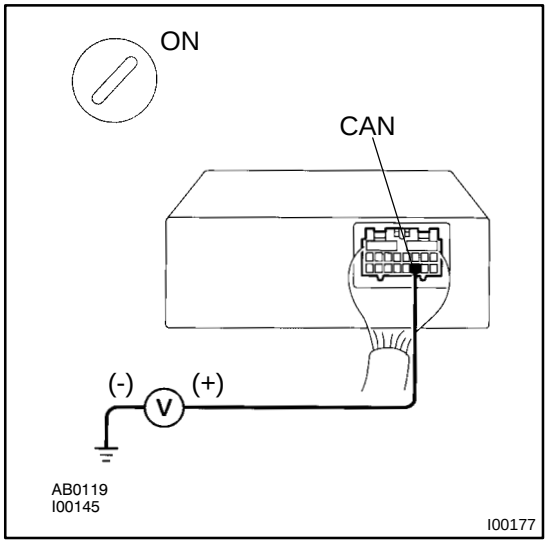

PREPARATION:

(a) Remove the ECU with connector still connected.

(b) Turn ignition switch ON.

CHECK:

Measure voltage between terminal CAN of cruise control ECU connector when main switch is held ON and OFF.

OK:

Main switch	Voltage
OFF	10 - 14 V
ON	Below 0.5 V

OK

Proceed to next circuit inspection shown on problem symptom table (See page DI-560).

NG

2	Check cancel switch continuity.

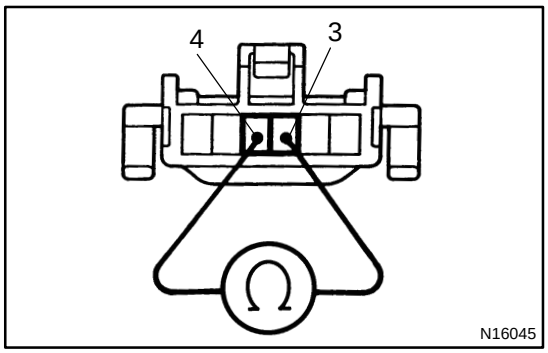

PREPARATION:

(a) Remove steering wheel center pad (See page SR-12).

(b) Disconnect the control switch connector.

CHECK:

Check continuity between terminals 3 and 4 of control switch connector when cancel switch is held ON and OFF.

OK:

Switch position	Tester connection	Specified condition
OFF	3 - 4	No continuity
Hold ON	3 - 4	Continuity

NG → **Replace control switch.**

OK ↓

3	Check harness and connector between cruise control ECU and cancel switch (See page IN-30).

NG → **Repair or replace harness or connector.**

OK ↓

Check and replace cruise control ECU (See page IN-30).

DI090-28

CRUISE MAIN Indicator Light Circuit

CIRCUIT DESCRIPTION

When the cruise control main switch is turned ON, CRUISE MAIN indicator light lights up.

WIRING DIAGRAM

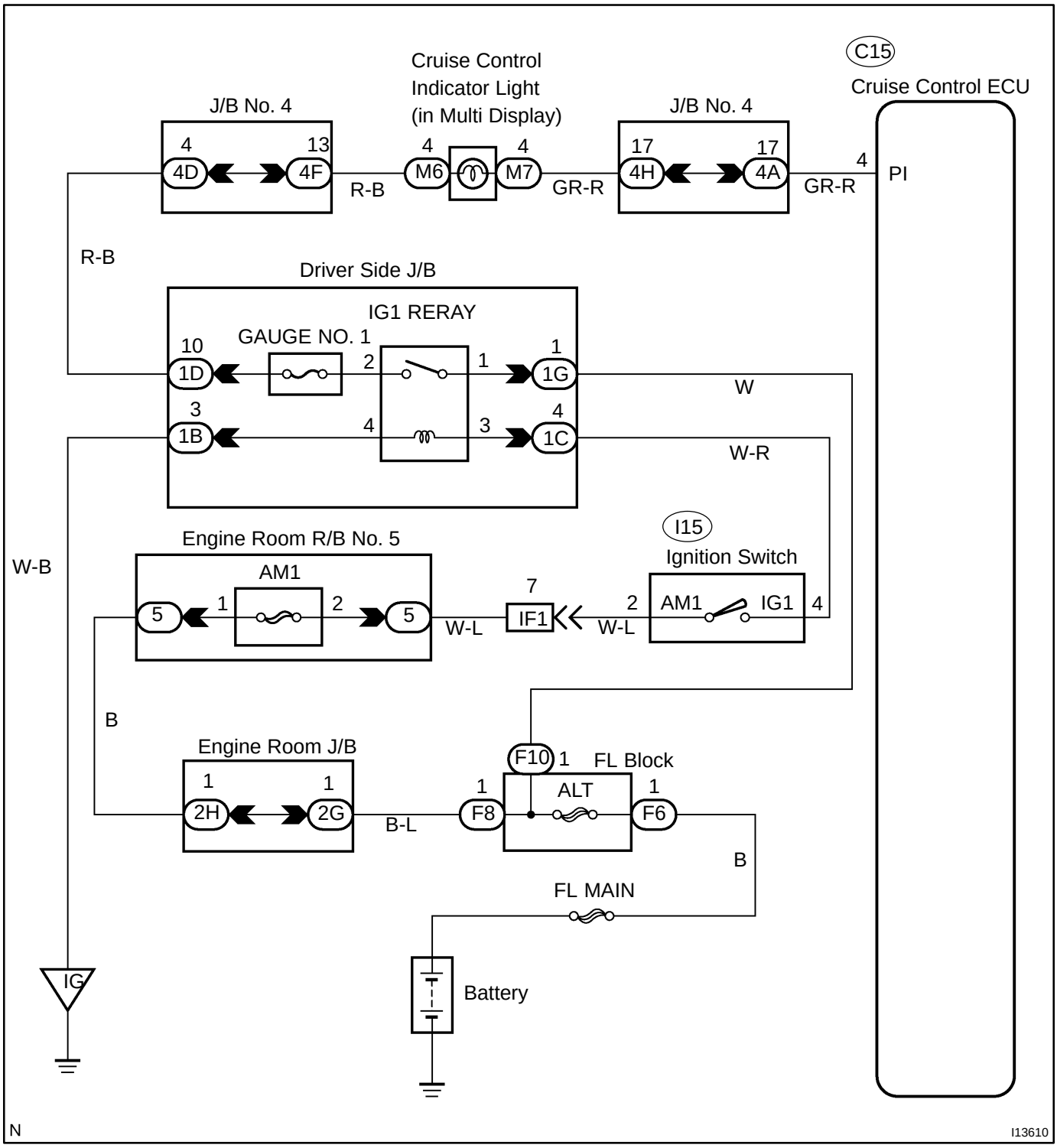

INSPECTION PROCEDURE

1	**Check voltage between terminals PI and GND of cruise control ECU connector.**

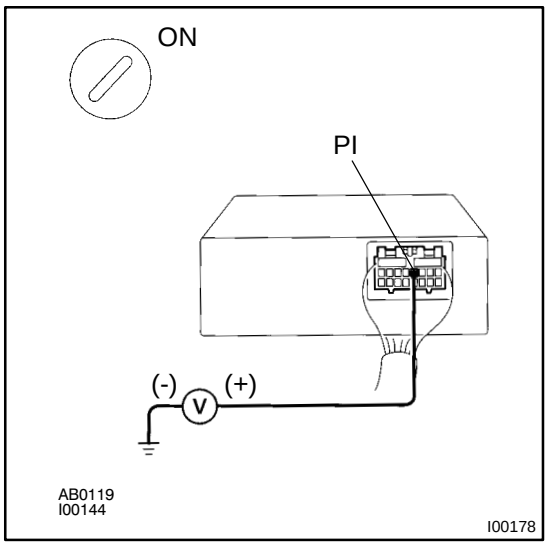

PREPARATION:

Tun ignition switch ON.

CHECK:

Measure voltage between terminals PI and GND of cruise control ECU connector when main switch is ON and OFF.

OK:

Switch position	Voltage
OFF	10 - 16 V
ON	Below 1.2 V

OK → **Proceed to next circuit inspection shown in problem symptom table (See page DI-560).**

NG

2	**Check combination meter (See page BE-2).**

NG → **Replace combination meter.**

OK

Check and replace cruise control ECU (See page IN-30).

DI091-15

Diagnosis Circuit

CIRCUIT DESCRIPTION

This circuit sends a signal to the ECU that outputs DTC.

WIRING DIAGRAM

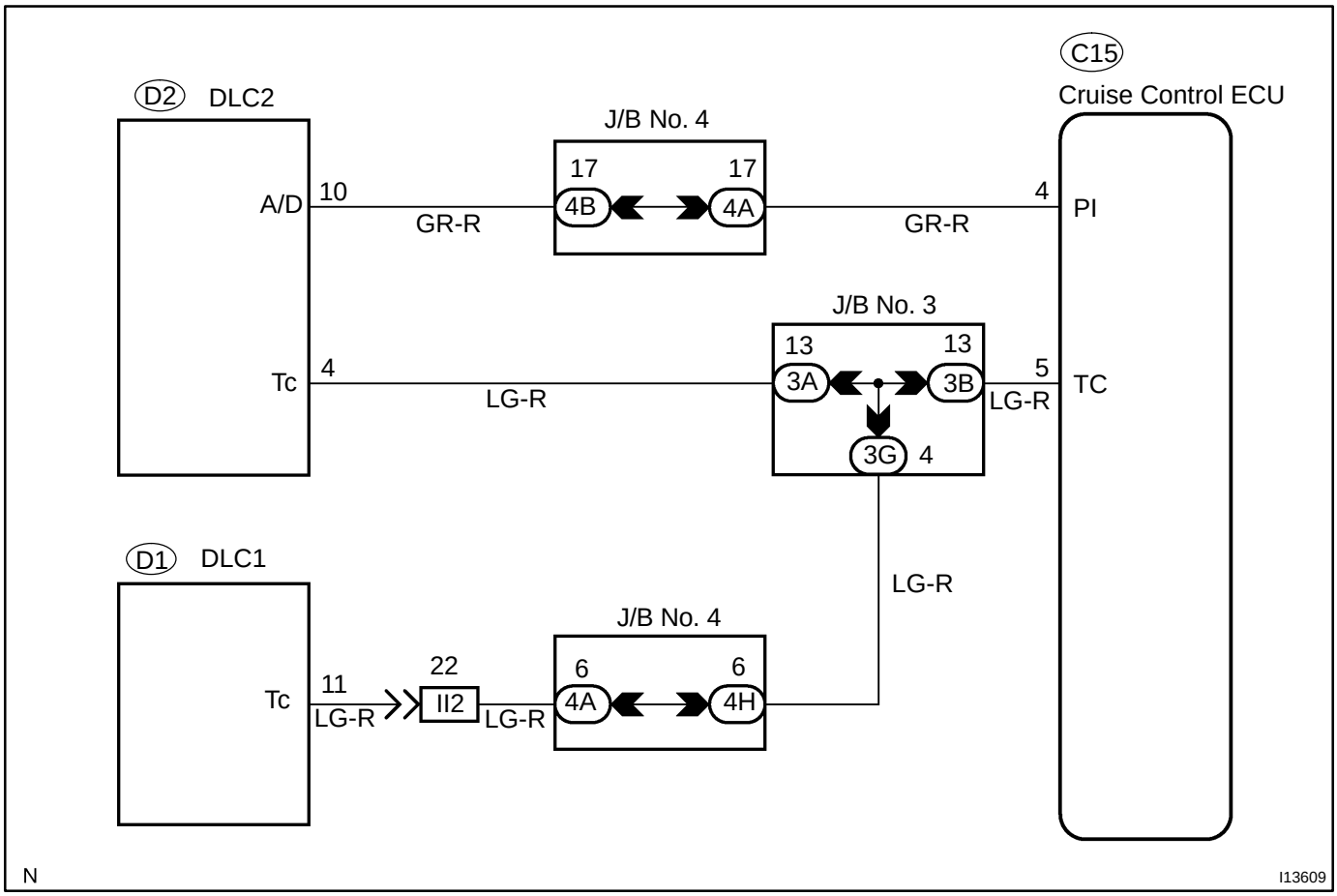

INSPECTION PROCEDURE

1	**Check voltage between terminals Tc and E_1 of DLC2.**

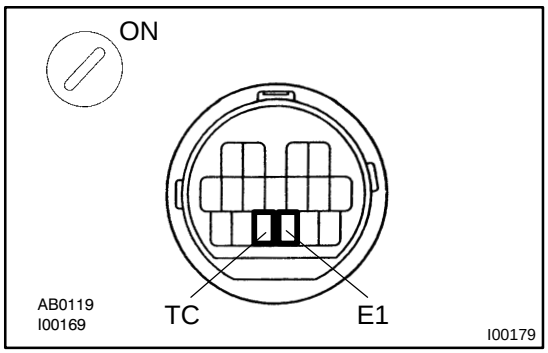

PREPARATION:
Turn ignition switch ON.
CHECK:
Measure voltage between terminals Tc and E_1 of DLC2.
OK:
Voltage: 10 - 14 V

OK → **Proceed to next circuit inspection shown in problem symptom table (See page DI-560).**

NG

2	**Check harness and connector between cruise control ECU and DLC2, DLC2 and body ground (See page IN-30).**

NG → **Repair or replace harness or connector.**

OK

Check and replace cruise control ECU (See page IN-30).

DI08X-15

ECU Power Source Circuit

CIRCUIT DESCRIPTION

The ECU power source supplies power to the actuator and sensors, etc, when terminal GND and the cruise control ECU case are grounded.

WIRING DIAGRAM

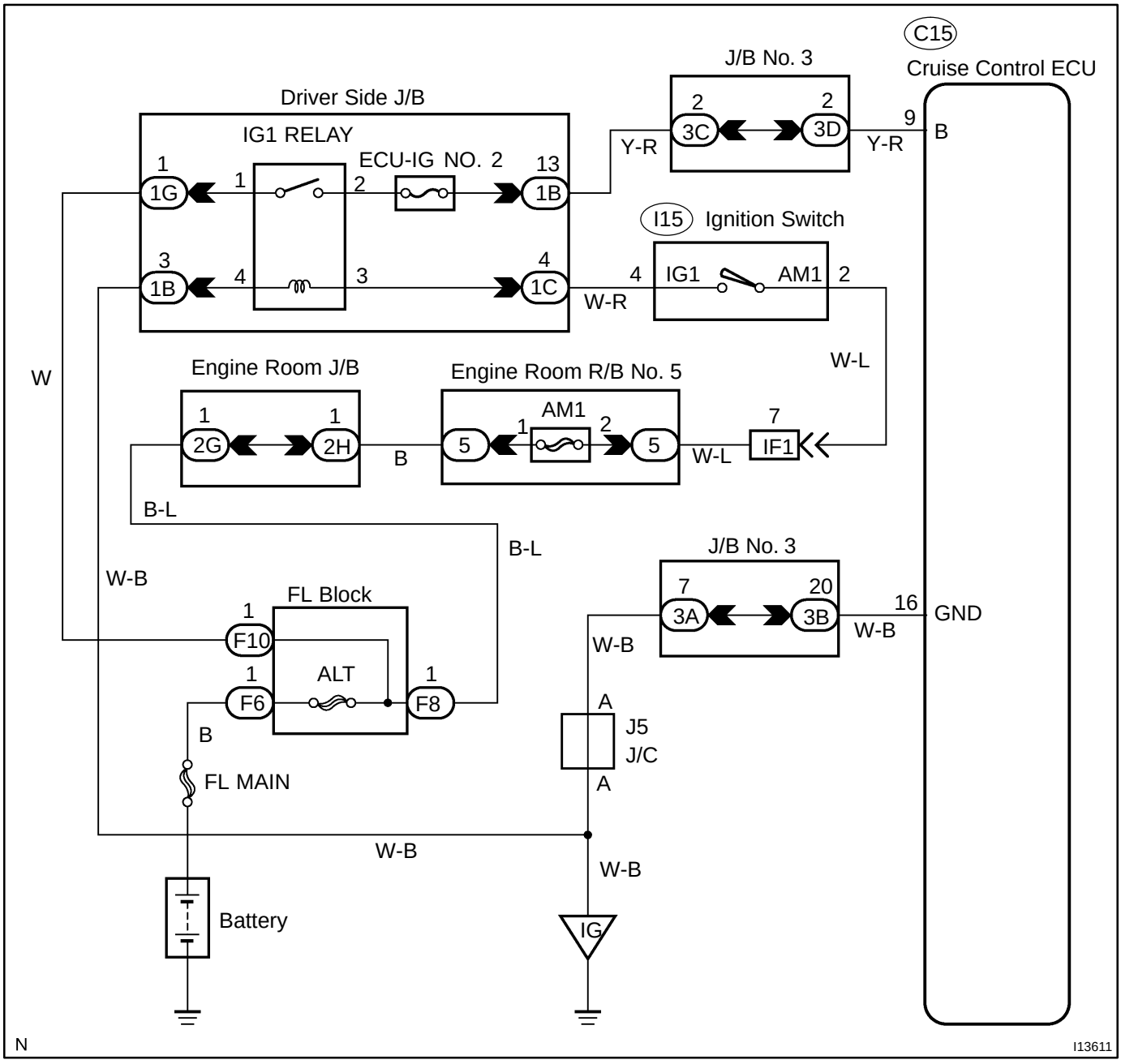

INSPECTION PROCEDURE

1	**Check ECU-IG fuse.**

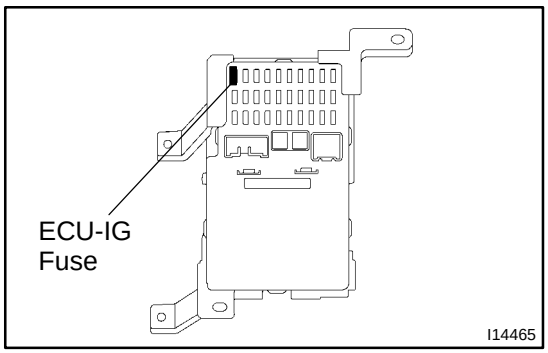

PREPARATION:
Remove the ECU-IG fuse from instrument panel junction block.
CHECK:
Check continuity of ECU-IG fuse.
OK:
Continuity

NG → **Check for short in all the harness and components connected to ECU-IG fuse.**

OK

2	**Check voltage between terminals B and GND of cruise control ECU connector.**

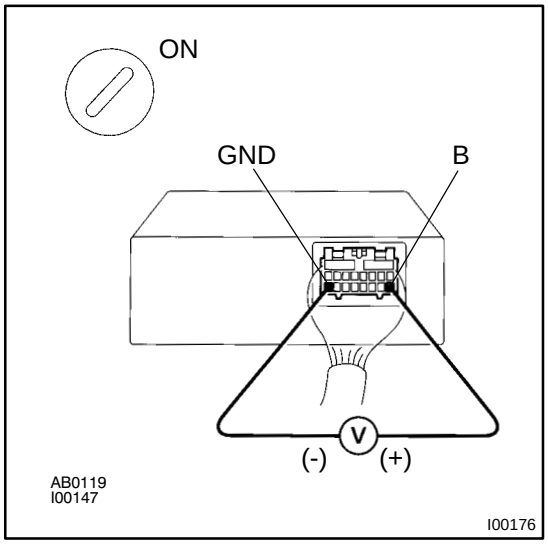

PREPARATION:
(a) Remove the ECU with connector still connected.
(b) Turn ignition switch ON.
CHECK:
Measure voltage between terminals B and GND of ECU connector.
OK:
10 - 14 V

OK → **Proceed to next circuit inspection shown in problem symptom table (See page DI-560).**

NG

3	**Check resistance between terminal GND of cruise control ECU connector and body ground.**

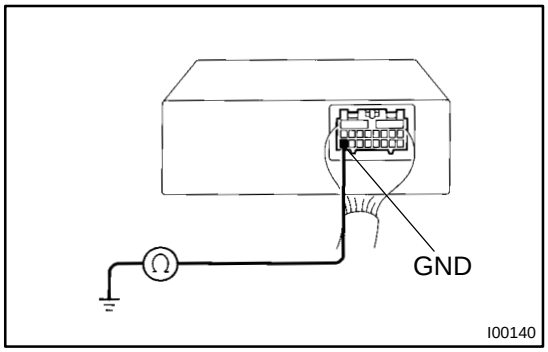

CHECK:

Measure resistance between terminal GND of ECU connector and body ground.

OK:

Resistance: Below 1 Ω

NG → **Repair or replace harness or connector.**

OK

Check and repair harness and connector between cruise control ECU and battery (See page DI-560).

DI08U-13

Electronically Controlled Transmission Communication Circuit

CIRCUIT DESCRIPTION

When driving uphill under the cruise control, in order to reduce shifting due to ON-OFF overdrive operation and to provide smooth driving, when down shifting in the electronically controlled transmission occurs, a signal to prevent upshift until the end of the uphill slope is sent from the cruise control ECU to the electronically controlled transmission.

Terminal ECT of the cruise control ECU detects the shift change signal (output to electronically controlled transmission No. 2 solenoid) from the ECM.

If the vehicle speeds down, also when terminal ECT of the cruise control ECU receives down shifting signal, it sends a signal from terminal OD to ECM to cut overdrive until the end of the uphill slope, and the gear shifts are reduced and gear shift points in the electronically controlled transmission are changed.

WIRING DIAGRAM

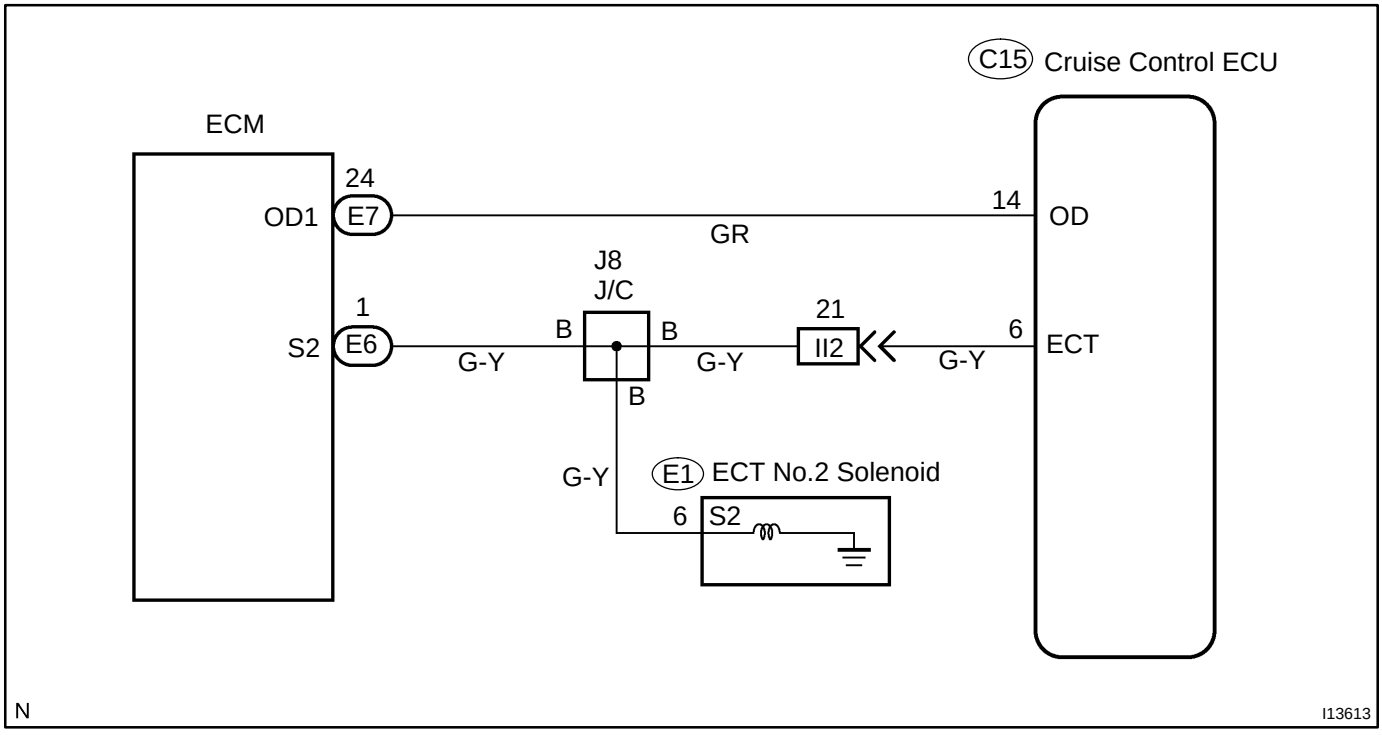

INSPECTION PROCEDURE

1	**Check operation of overdrive.**

PREPARATION:

Test drive after engine warms up.

CHECK:

Check that overdrive ON ↔ OFF occurs by operation of OD switch ON-OFF.

NG → **Check and repair electronically controlled transmission (See page DI-158).**

OK

2	**Check voltage between terminal OD of harness side connector of cruise control ECU and body ground.**

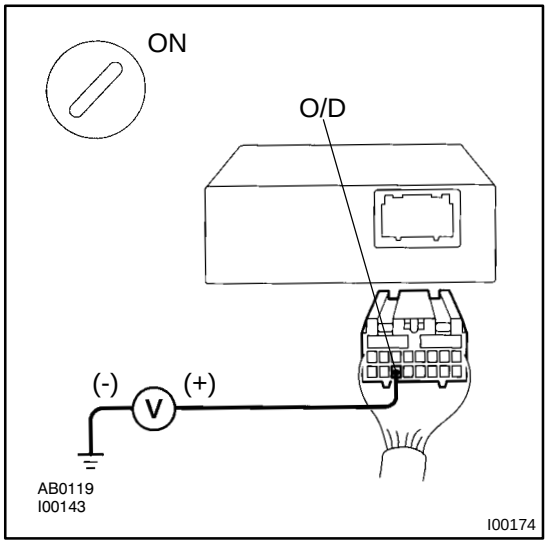

PREPARATION:

(a) Remove the ECU with connector still connected.
(b) Turn ignition switch ON.
(c) Disconnect the ECU connector.

CHECK:

Measure voltage between terminal OD of harness side connector of ECU and body ground.

OK:

Voltage: 10 - 14 V

NG → **Go to step 5.**

OK

3	Check voltage between terminal ECT of cruise control ECU connector and body ground (On test drive).

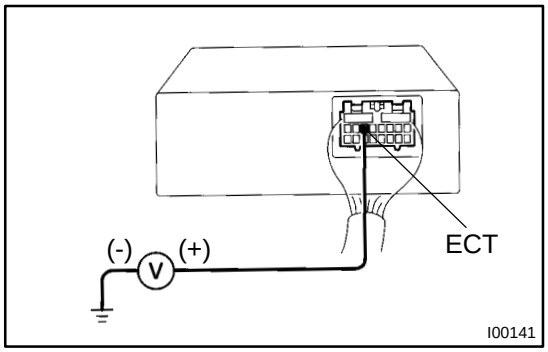

PREPARATION:

(a) Connect the ECU connector.

(b) Test drive after engine warms up.

CHECK:

Check voltage between terminal ECT of ECU connector and body ground when OD switch is ON and OFF.

OK:

OD switch position	Voltage
ON	8 - 14 V
OFF	Below 0.5 V

OK → **Proceed to next circuit inspection shown in problem symptom table (See page DI-560).**

NG

4	Check harness and connector between terminal ECT of cruise control ECU and electronically controlled transmission solenoid (See page IN-30).

NG → **Repair or replace harness or connector.**

OK

Check and replace cruise control ECU.

5	Check harness and connector between terminal OD of cruise control ECU and terminal OD1 of ECM (See page IN-30).

NG → **Repair or replace harness or connector.**

OK

Check and replace cruise control ECU (See page IN-30).

DI08V-15

Park/Neutral Position Switch Circuit

CIRCUIT DESCRIPTION

When the shift position is except D, a signal is sent from the park/neutral position switch to the ECU. When this signal is input during cruise control driving, the ECU cancels the cruise control.

WIRING DIAGRAM

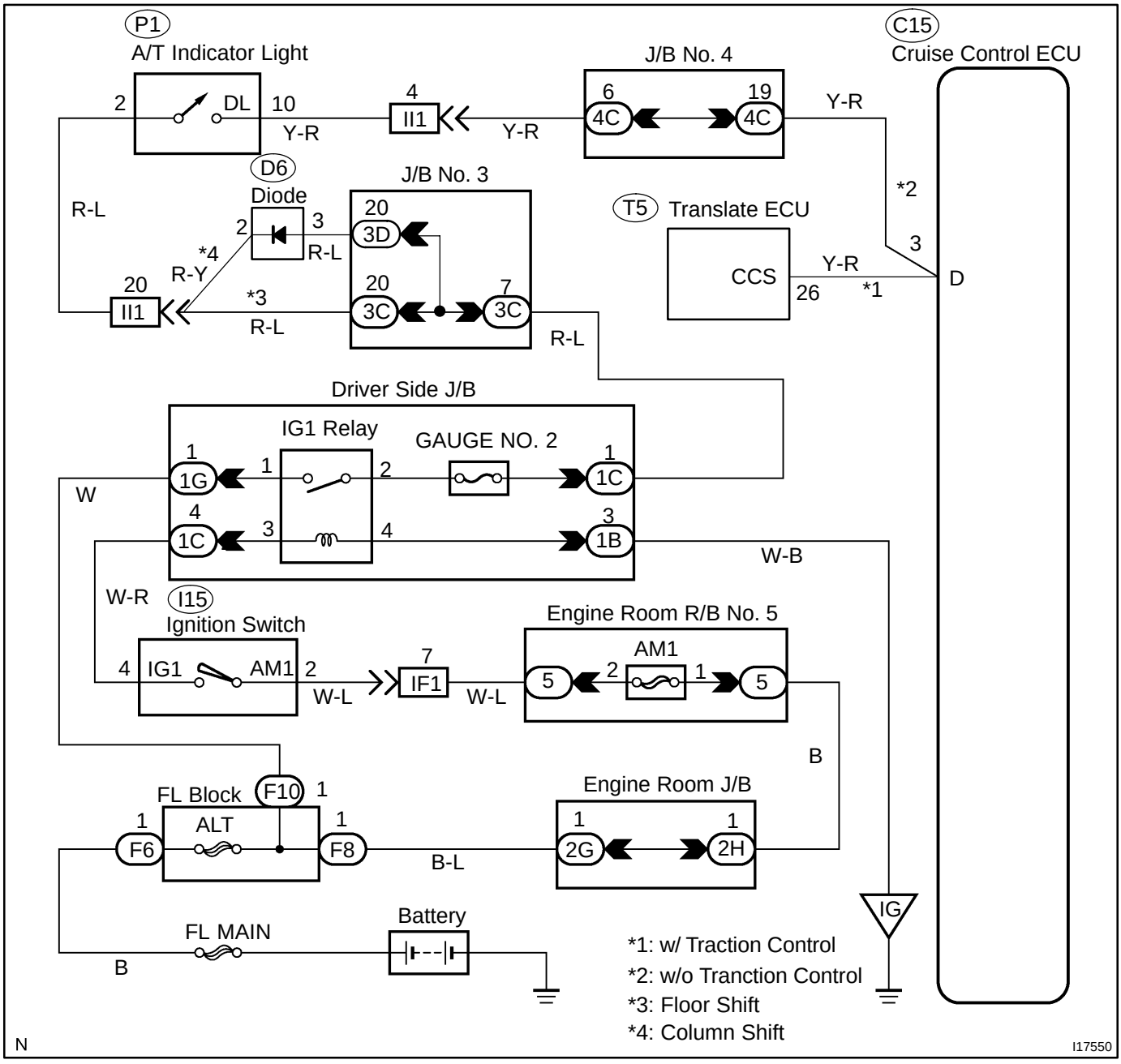

INSPECTION PROCEDURE

1	**Check starter operation.**

CHECK:

Check that the starter operates normally and that the engine starts.

NG → **Proceed to engine troubleshooting.**

OK

2	**Input signal check.**

Input Signal	Indicator Light Blinking Pattern
Turn PNP switch OFF (Shift to positions except D)	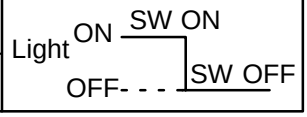

PREPARATION:

See input signal check on page DI-551 .

CHECK:

Check the indicator light when shifting into positions except D.

OK:

The indicator light goes off when shifting into positions except D.

OK → **Proceed to next circuit inspection shown in problem symptom table (See page DI-560).**

NG

3	**Check voltage between terminal D of cruise control ECU connector and body ground.**

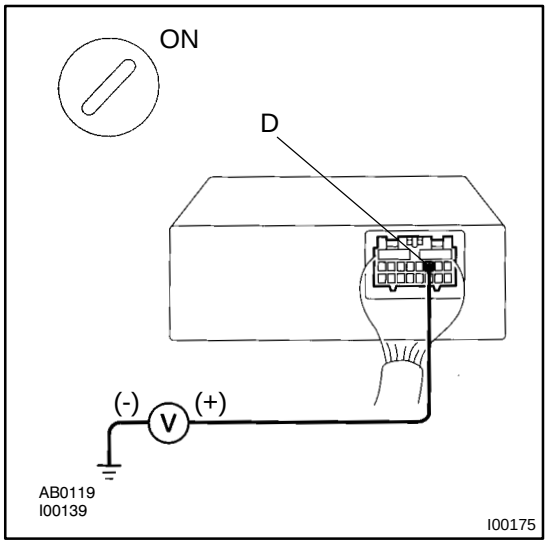

PREPARATION:

Turn ignition switch ON.

CHECK:

Measure voltage between terminal D of ECU connector and body ground when shifting into D position and other positions.

OK:

Shift Position	Voltage
D position	10 - 14 V
Other positions	Below 1 V

OK → **Proceed to next circuit inspection shown in problem symptom table (See page DI-560).**

NG

4	**Check harness and connector between cruise control ECU and park/neutral position switch (See page IN-30).**

NG → **Repair or replace harness or connector.**

OK

Check and replace cruise control ECU (See page IN-30).

DI08T-17

Stop Light Switch Circuit

CIRCUIT DESCRIPTION

When the brake pedal is depressed, the stop light switch sends a signal to the ECU. When the ECU receives this signal, it cancels the cruise control.
A fail-safe function is provided so that the cancel functions normally, even if there is a malfunction in the stop light signal circuit.
The cancel conditions are: Battery positive voltage at terminal STP-
When the brake is ON, battery positive voltage normally is applied through the STOP fuse and stop light switch to terminal STP- of the ECU, and the ECU turns the cruise control OFF.
If the harness connected to terminal STP- has an open circuit, terminal STP- will have battery positive voltage and the cruise control will be turned OFF.
Also, when the brake is ON, the magnetic clutch circuit is cut mechanically by the stop light switch, turning the cruise control OFF. (See page DI-563 for operation of the magnetic clutch)

WIRING DIAGRAM

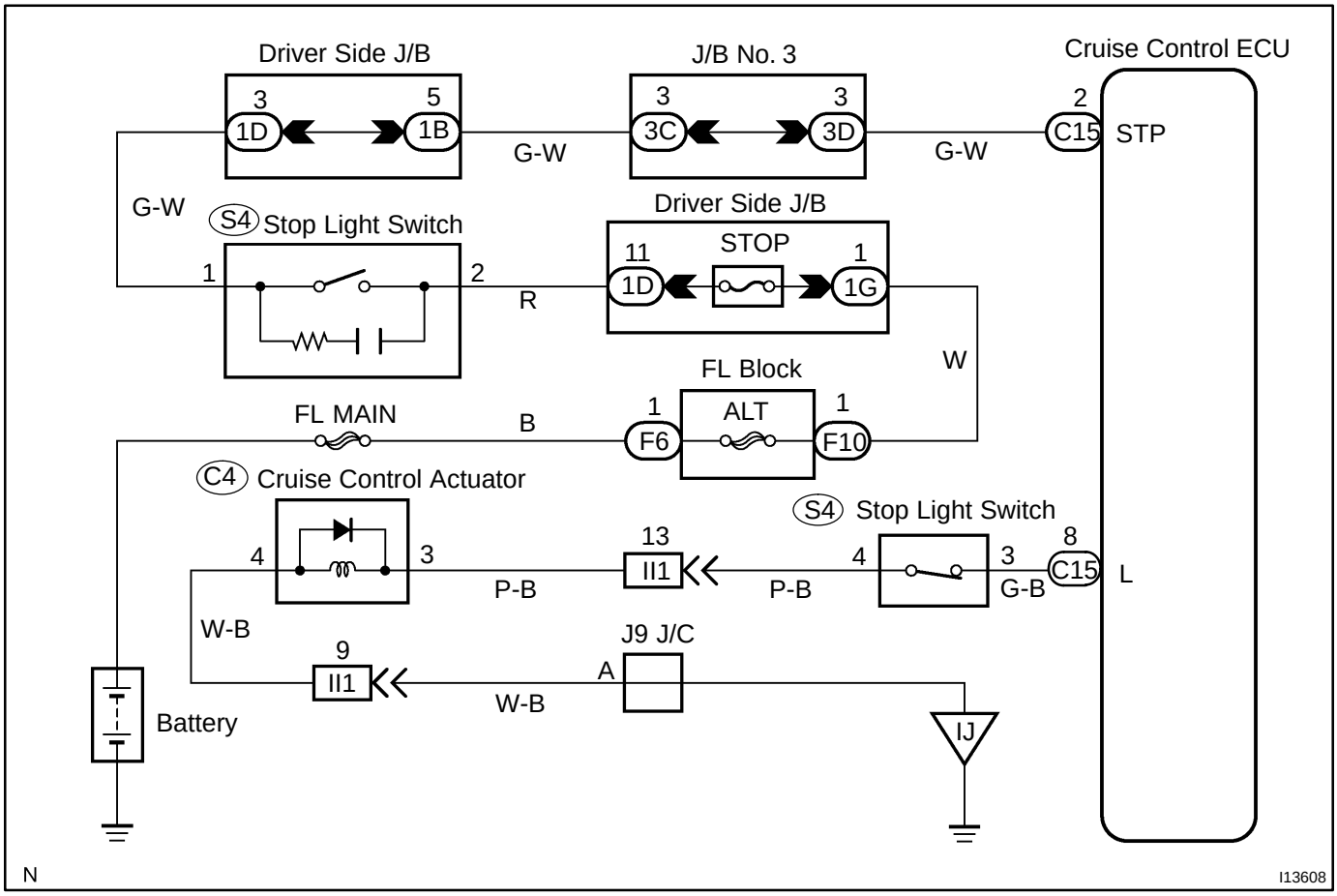

INSPECTION PROCEDURE

1	**Check operation of stop light.**

CHECK:

Check that stop light comes ON when brake pedal is depressed, and turns OFF when brake pedal is released.

NG → **Check stop light system (See page BE-2).**

OK

2	**Input signal check.**

Input Signal	Indicator Light Blinking Pattern
Stop Light switch ON	Light: OFF → SW OFF; ON - - - - - → SW ON

CHECK:

(a) See input signal check on DI-551 .

(b) Check the indicator light when the brake pedal is depressed.

OK:

The indicator light goes OFF when the brake pedal is depressed.

OK → **Proceed to next circuit inspection shown in problem symptom table (See page DI-560).**

NG

3	Check voltage between terminal STP- of cruise control ECU connector and body ground.

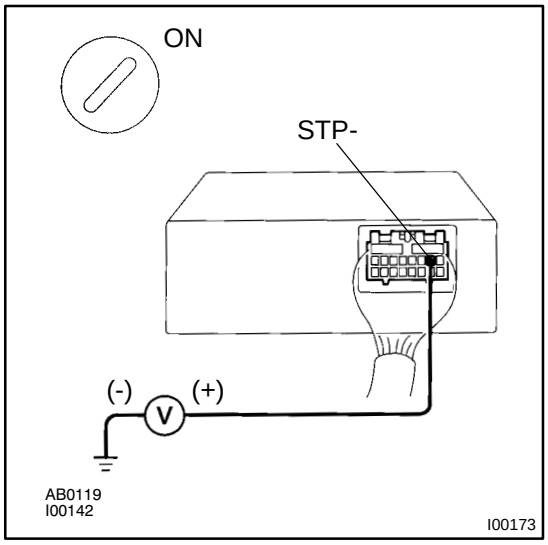

PREPARATION:

(a) Remove the ECU with connectors still connected.

(b) Turn ignition switch ON.

CHECK:

Measure voltage between terminal STP- of cruise control ECU connector and body ground, when the brake pedal is depressed and released.

OK:

Depressed	10 - 14 V
Released	Below 1 V

OK → **Proceed to next circuit inspection shown in problem symptom table (See page DI-560).**

NG

4	Check for open in harness and connectors between terminal STP- of cruise control ECU and stop light switch (See page IN-30).

NG → **Repair or replace harness or connector.**

OK

Check and replace cruise control ECU (See page IN-30).

DI08G-10

CUSTOMER PROBLEM ANALYSIS CHECK

CRUISE CONTROL SYSTEM Check Sheet

Inspector's name: _____

Customer's Name		**Registration No.**	
		Registration Year	
		Frame No.	
Date Vehicle Brought in	/ /	**Odometer Reading**	**km Mile**

Condition of Problem Occurrence	**Date of Problem Occurrence**	/ /
	How Often does Problem Occurs	☑ Continuous ☑ Intermittent (Times a day)
	Vehicle Speed when Problem Occurred	**km Mile**

Symptoms	☑ Auto cancel occurs	● Driving condition ☐ City driving ☐ Freeway ☐ Up hill ☐ Down hill ● After cancel occurred, did the driver activate cruise control again? ☐ Yes ☐ No
	☐ Cancel does not occur	☐ With brake ON ☐ Except D position shift ☐ At 40 km/h (25 mph) or less ☐ When control SW turns to CANCEL position
	☐ Cruise control malfunction	☐ Slip to acceleration side ☐ Slip to deceleration side ☐ Hunting occurs ☐ O/D cut off does not occur ☐ O/D does not return
	☐ Switch malfunction	☐ SET ☐ ACCEL ☐ COAST ☐ RESUME ☐ CANCEL
	☐ Cruise MAIN indicator light	☐ Remains ON ☐ Does not light up ☐ Blinking

DTC Check	**1st Time**	☐ Normal Code ☐ Malfunction Code (Code)
	2nd Time	☐ Normal Code ☐ Malfunction Code (Code)

DI0EJ-09

DIAGNOSTIC TROUBLE CODE CHART

If a malfunction code is displayed during the DTC check, check the circuit listed for that code in the table below and proceed to the appropriate page.

DTC No. (See Page)	Circuit Inspection	Trouble Area
11, 15 (DI-561)	Actuator Motor Circuit	●Actuator motor ●Harness or connector between cruise control ECU and actuator motor ●Cruise control ECU
12 (DI-563)	Actuator Magnetic Clutch Circuit	●STOP Fuse ●Stop light switch ●Actuator magnetic clutch ●Harness or connector between cruise control ECU and actuator magnetic clutch, actuator magnetic clutch and body ground ●Cruise control ECU
14 (DI-566)	Actuator Mechanical Malfunction	●Actuator motor (actuator lock: motor, arm) ●Cruise control ECU
21 (DI-568)	Open in Vehicle Speed Sensor Circuit	●Combination meter ●Harness or connector between cruise control ECU and combination meter, combination meter and vehicle speed sensor ●Vehicle speed sensor ●Cruise control ECU
23 (DI-571)	Vehicle Speed Signal Abnormal	●Vehicle speed sensor ●Cruise control ECU
32 (DI-572)	Control Switch Circuit	●Cruise control switch ●Harness or connector between cruise control ECU and cruise control switch, cruise control switch and body ground ●Cruise control ECU
41	Cruise control ECU	●Cruise control ECU
42	Source voltage drop	●Power source
51 (DI-575)	Idle Signal Circuit	●Throttle position sensor ●Harness or connector between ECM and throttle position sensor ●Harness or connector between cruise control ECU and ECM ●Cruise control ECU

CRUISE CONTROL SYSTEM

DI08F-13

HOW TO PROCEED WITH TROUBLESHOOTING

Troubleshoot in accordance with the procedure on the following page.

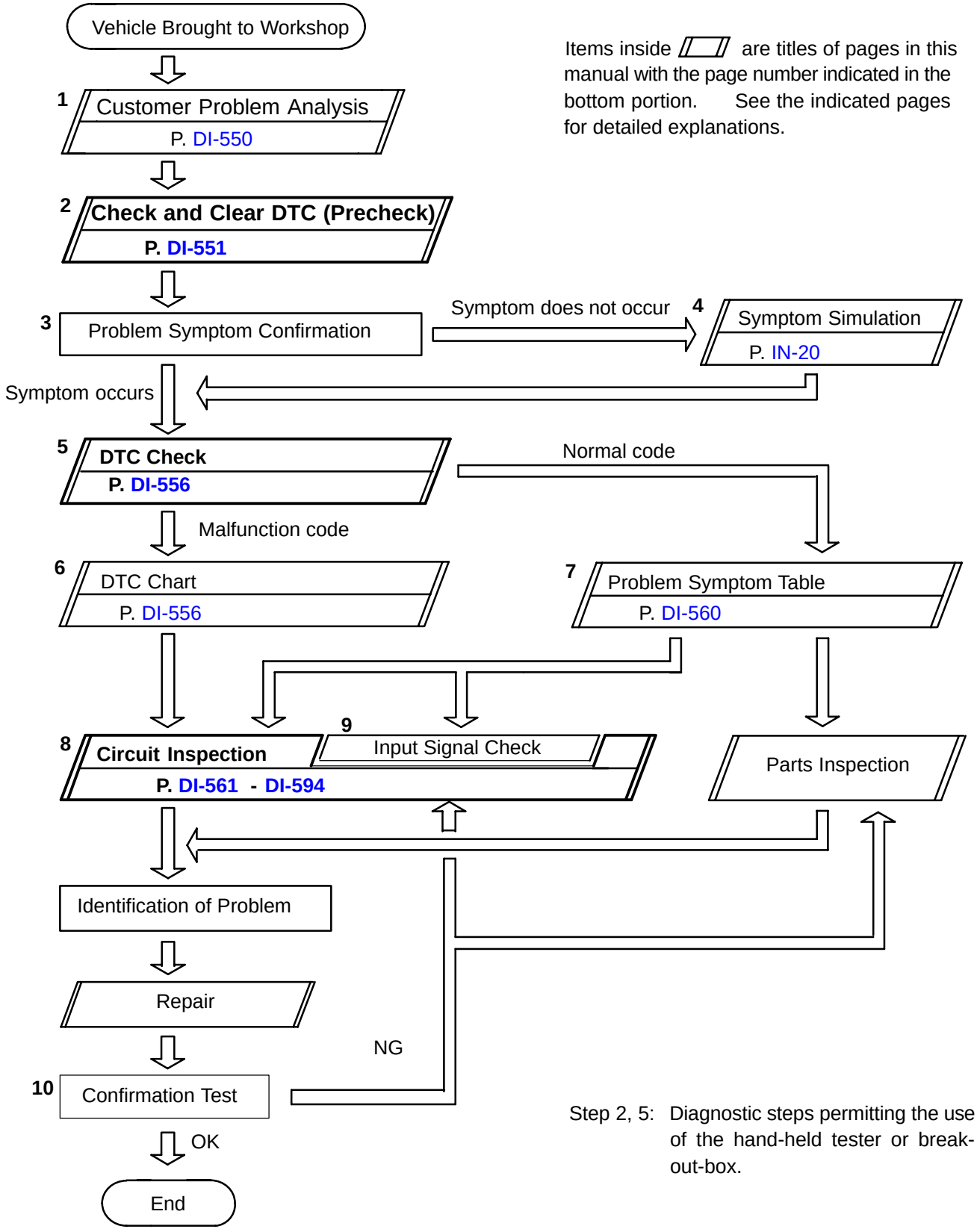

Items inside ▱ are titles of pages in this manual with the page number indicated in the bottom portion. See the indicated pages for detailed explanations.

Step 2, 5: Diagnostic steps permitting the use of the hand-held tester or break-out-box.

DI08J-10

PARTS LOCATION

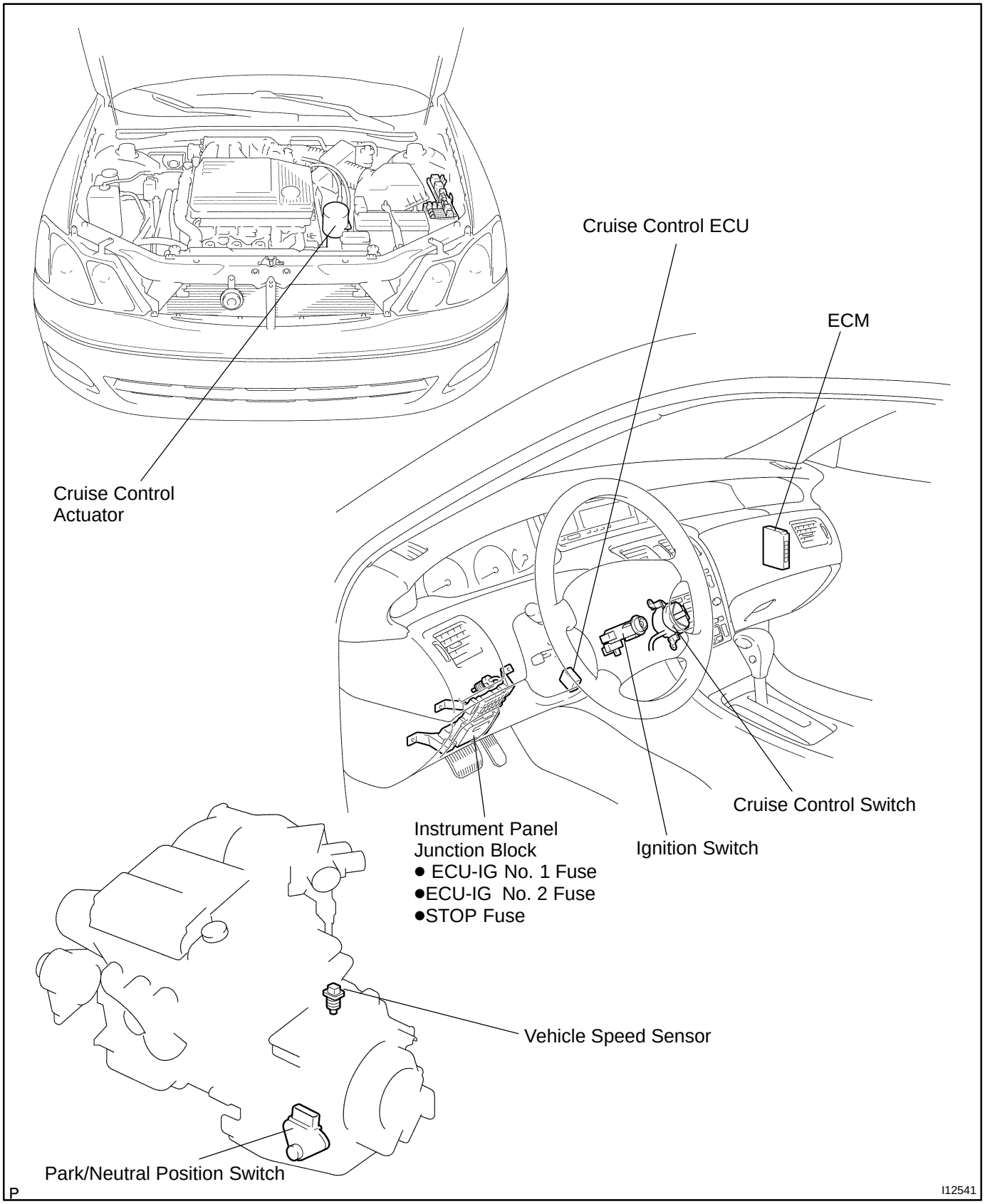

DI6L5-01

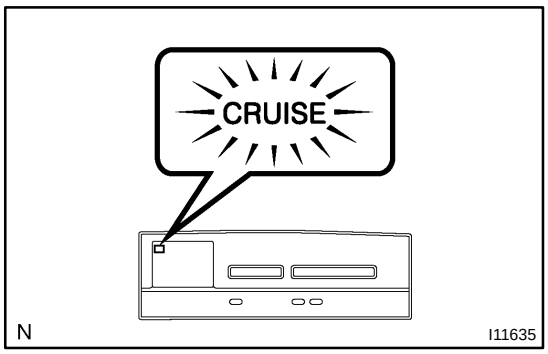

PRE-CHECK

1. DIAGNOSIS SYSTEM

(a) Check the indicator.

(1) Turn the ignition switch ON.

(2) Check that the CRUISE MAIN indicator light comes ON when the cruise control main switch is turned ON, and that the indicator light goes OFF when the main switch is turned OFF.

HINT:

If the indicator check result is not normal, proceed to trouble-shooting (See page BE-43) for the combination meter section.

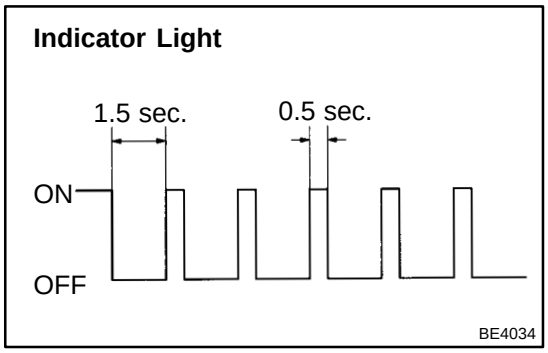

(b) Check the DTC.

HINT:

If a malfunction occurs in the No. 1 vehicle speed sensor or actuator, etc. during cruise control driving, the ECU actuates AUTO CANCEL of the cruise control and turns on and off the CRUISE MAIN indicator light to inform the driver of a malfunction. At the same time, the malfunction is stored in memory as a DTC.

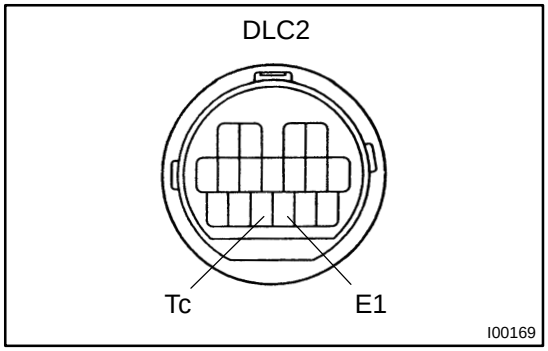

(c) Output of DTC using diagnosis check wire.

(1) Turn the ignition switch ON.

(2) Using SST, connect terminals Tc and E_1 of DLC2.

SST 09843-18020

(3) Read the DTC on the CRUISE MAIN indicator light.

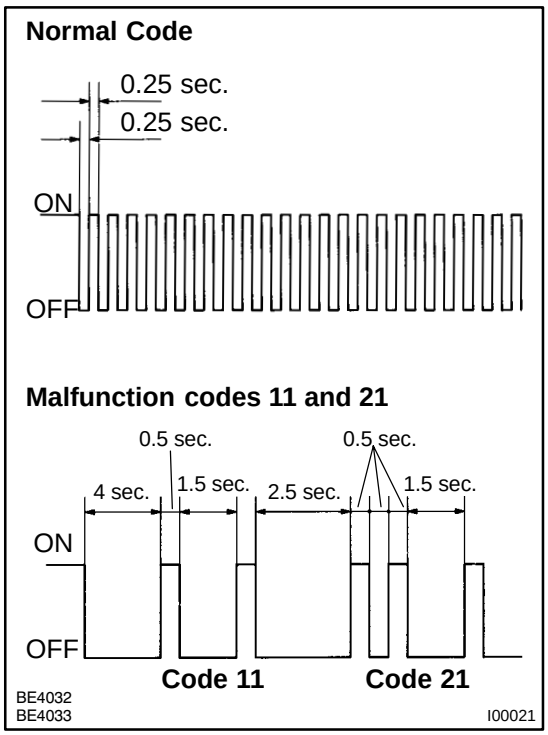

HINT:

- If the DTC is not output, inspect the diagnosis circuit (See page DI-594).
- As an example, the blinking patterns for codes; normal, 11 and 21 are shown in the illustration.

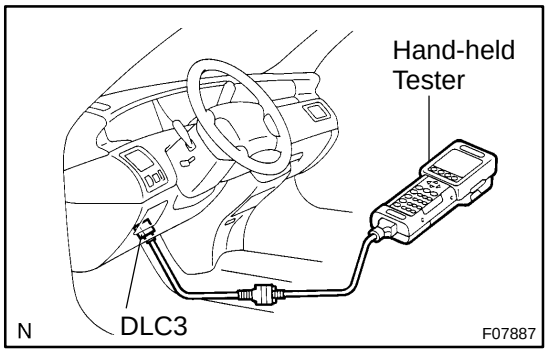

2. USING HAND-HELD TESTER

(a) Hook up the hand-held tester to the DLC3.

(b) Monitor the ECU data by following the prompts on the tester screen.

HINT:

Hand-held tester has a ”Snapshot” function which records the monitored data.

Please refer to the hand-held tester operator’s manual for further details.

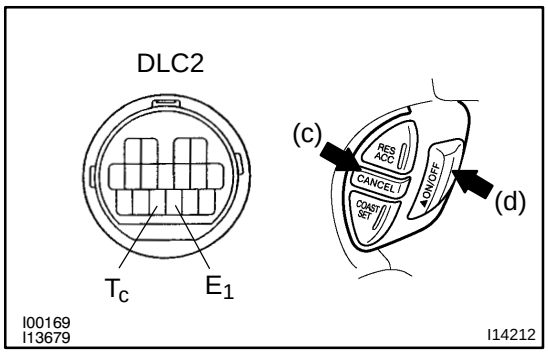

3. DTC CLEARANCE (ERASE MODE)

HINT:

During in the erase mode, diag detection does not work.

(a) Drive at about 15 km/h or below.

(b) Using SST, connect terminals Tc and E1 of DLC2.
SST 09843-18020

(c) Push the cruise control switch to CANCEL.

(d) On the above metioned condition, turn on the cruise control main switch 5 times within 3 seconds.

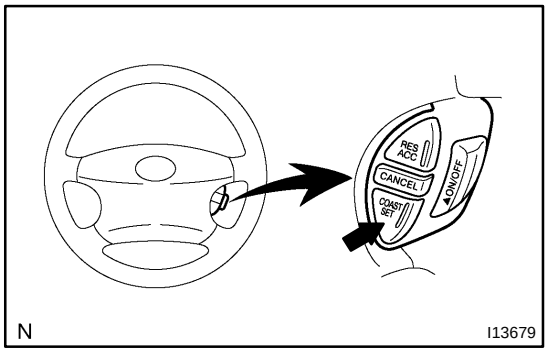

4. PROBLEM SYMPTOM CHECK (ROAD TEST)

(a) Inspect the SET switch.

(1) Push the main switch ON.

(2) Drive at a desired speed (40 km/h (25 mph) or higher).

(3) Press the control switch to the SET/COAST.

(4) After releasing the switch, check that the vehicle cruises at the desired speed.

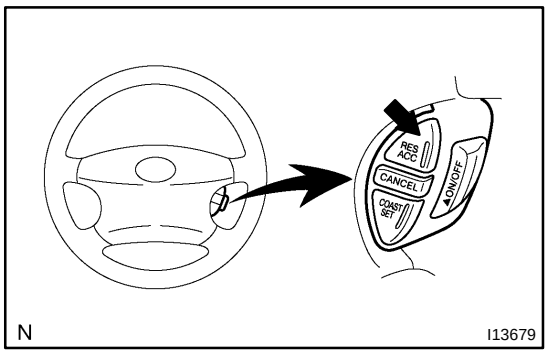

(b) Inspect the ACCEL switch.
(1) Push the main switch ON.
(2) Drive at a desired speed (40 km/h (25 mph) or higher).
(3) Check that the vehicle speed increases while the control switch is pushed to RES/ACC, and that the vehicle cruises at the set speed when the switch is released.
(4) Momentarily raise the control switch push to the RES/ACC position and then immediately release it. Check that the vehicle speed increases by approx. 1.5 km/h (Tap-up function).

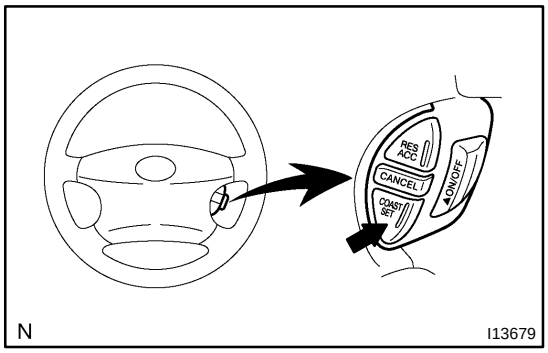

(c) Inspect the COAST switch.
(1) Push the main switch ON.
(2) Drive at a desired speed (40 km/h (25 mph) or higher).
(3) Check that the vehicle speed decreases while the control switch is turned to SET/COAST, and the vehicle cruises at the set speed when the switch is released.
(4) Momentarily push the control switch down to SET/COAST, and then immediately release it. Check that the vehicle speed decreases by about 1.5 km/h (Tap-down function).

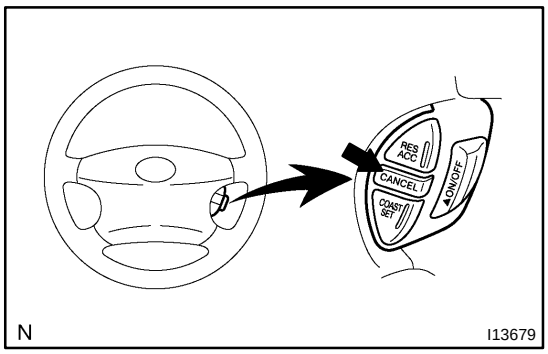

(d) Inspect the CANCEL switch.
(1) Push the main switch ON.
(2) Drive at a desired speed (40 km/h (25 mph) or higher).
(3) When operating one of the following operations, check that the cruise control system is cancelled and that the normal driving mode is reset.
- Depress the brake pedal
- Shift to except D position
- Push the main switch OFF
- Push the cruise control switch to CANCEL

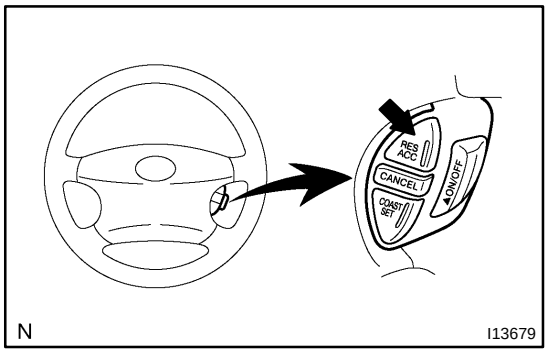

(e) Inspect the RESUME switch.
(1) Push the main switch ON.
(2) Drive at a desired speed (40 km/h (25 mph) or higher).
(3) When operating one of the following operations check that the cruise control system is cancelled and that the normal driving mode is reset.
- Depress the brake pedal
- Shift to except D position
- Push the main switch OFF
- Push the cruise control switch to CANCEL

(4) After the control switch is pushed to RES/ACC at the driving speed of more than 40 km/h (25 mph), check that the vehicle restores the speed prior to the cancellation.

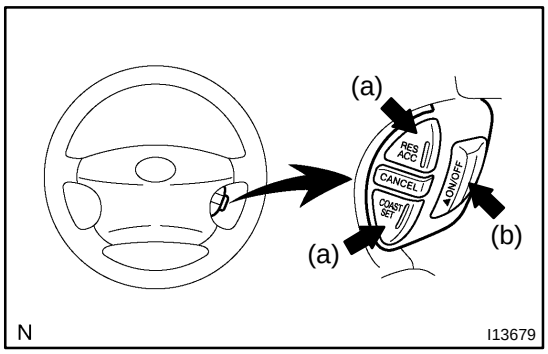

5. INPUT SIGNAL CHECK

HINT:

(1) For check No.1 ~ No.3:

Turn ignition switch ON.

(2) For check No.4:

- Jack up the vehicle.
- Start the engine.
- Shift to D position.

(a) Push the control switch to SET/COAST or RES/ACC position and hold it down or up.

(b) Push the main switch ON.

(c) Check that the CRUISE MAIN indicator light blinks twice or 3 times repeatedly after 3 seconds.

(d) Push the SET/COAST or RES/ACC switch OFF.

(e) Operate each switch as listed in the table below.

(f) Read the blinking pattern of the CRUISE MAIN indicator light.

(g) After performing the check, turn the main switch OFF.

HINT:

When 2 or more signals are input to the ECU, the lowest numbered code will be displayed 1st.

No.	Operation Method	CRUISE MAIN Indicator Light Blinking Pattern	Diagnosis
1	Push SET/COAST switch ON	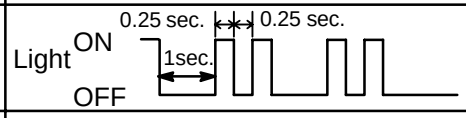	SET/COAST switch circuit is normal
2	Push RES/ACC switch ON		RES/ACC switch circuit is normal
3	Push CANCEL switch ON	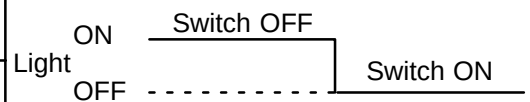	CANCEL switch circuit is normal
	Turn stop light switch ON Depress brake pedal		Stop light switch circuit is normal
	Turn PNP switch OFF (Shift to except D position)	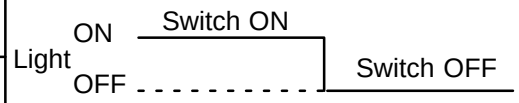	PNP switch circuit is normal
	Turn clutch switch OFF (Depress clutch pedal)		Clutch switch circuit is normal
4	Drive at about 40 km/h (25 mph)or higher		Vehicle Speed Sensor is normal
	Drive at about 40 km/h (25 mph) or below	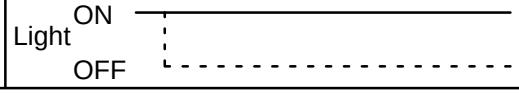	

DI08L-15

PROBLEM SYMPTOMS TABLE

Symptom	Suspect AreaSuspect Area	See page
SET not occourring or CANCEL occurring. (DTC is Normal)	1. Vehicle Speed Sensor 2. Control Switch Circuit (Cruise control switch) 3. Stop Light Switch Circuit 4. Park/Neutral Position Switch Circuit 5. Actuator Motor Circuit 6. Cruise Control Cable 7. Cruise Control ECU	DI-568 DI-572 DI-578 DI-584 DI-561 DI-596 IN-30
SET not occurring or CANCEL occurring. (DTC dose not output)	1. ECU Power Source Circuit 2. Cruise Control ECU	DI-587 IN-30
Actual vehicle speed deviates above or below the set speed.	1. Cruise Control Cable 2. Vehicle Speed Signal Abnormal 3. Electronically Controlled Transmission Communication Circuit 4. Actuator Motor Circuit 5. Idle Signal Circuit (Main throttle position sensor) 6. Cruise Control ECU	DI-596 DI-568 DI-581 DI-581 DI-561 DI-575 IN-30
Gear shifting frequent between 3rd O/D when driving on uphill road. (Hurting)	1. Electronically Controlled Transmission Communication Circuit 2. Cruise Control ECU	DI-581 DI-581 IN-30
Cruise control not cancelled, even when brake pedal is de-pressed.	1. Cruise Control Cable 2. Stop Light Switch Circuit 3. Actuator Motor Circuit 4. Cruise Control ECU	DI-596 DI-578 DI-561 IN-30
Cruise control not cancelled, even when transmission is shifted to ”N” postion.	1. Cruise Control Cable 2. Park/Neutral Position Switch Circuit 3. Actuator Motor Circuit 4. Cruise Control ECU	DI-596 DI-584 DI-561 IN-30
Control switch does not operate. (SET/COAST, ACC/RES, CANCEL not possible)	1. Cruise Control Cable 2. Control Switch Circuit 3. Actuator Motor Circuit 4. Cruise Control ECU	DI-596 DI-572 DI-561 IN-30
SET possible at 40 km/h (25 mph) or less, or CANCEL does not operate at 40 km/h (25 mph) or less.	1. Cruise Control Cable 2. Vehicle Speed Signal Abnormal 3. Actuator Motor Circuit 4. Cruise Control ECU	DI-596 DI-568 DI-561 IN-30
Poor response is in ACCEL and RESUME modes.	1. Cruise Control Cable 2. Electronically Controlled Transmission Communication Circuit 3. Actuator Motor Circuit 4. Cruise Control ECU	DI-596 DI-581 DI-581 DI-561 IN-30
O/D does not resume, even though the road is not uphill.	1. Electronically Controlled Transmission Communication Circuit 2. Cruise Control ECU	DI-581 DI-581 IN-30
DTC memory is erased.	1. Cruise Control ECU	IN-30
DTC is not output, or is output when should not be.	1. Diagnosis Circuit 2. Cruise Control ECU	DI-594 IN-30
Cruise MAIN indicator light remains ON or falls to light up.	1. Cruise MAIN Indicator Light Switch Circuit	DI-592

DI1KT-08

TERMINALS OF ECU

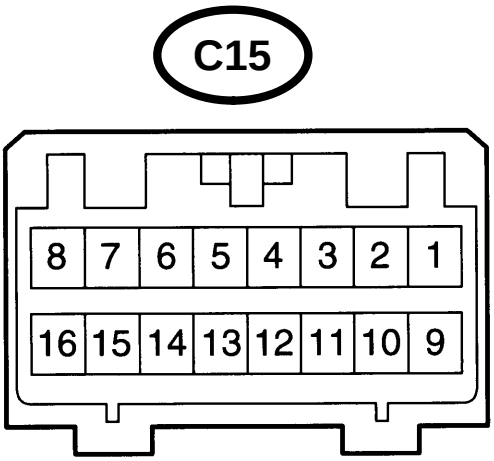

I00293

Symbols (Terminals No.)	Wiring Color	Condition	STD Voltage (V)
STP ↔ GND (C15-2 ↔ C15-16)	G-W ↔ W-B	Depress brake pedal	10 - 16 V
		Release brake pedal	Below 1 V
D ↔ GND (C15-3 ↔ C15-16)	Y-R ↔ W-B	Shift to positions except D	Below 1 V
		Shift to D position	10 - 16 V
PI ↔ GND (C15-4 ↔ C15-16)	GR-R ↔ W-B	Ignition switch ON Cruise control main switch ON	Below 1.2 V
		Ignition switch ON Cruise control main switch OFF	10 - 16 V
TC ↔ GND (C15-5 ↔ C15-16)	LG-R ↔ W-B	Ignition switch ON	10 - 16 V
		Ignition switch ON Connect terminals Tc and E1 of diagnostic check connector	Below 1 V
ECT ↔ GND (C15-6 ↔ C15-16)	G-Y ↔ W-B	During driving Gear position 3rd	10 - 16 V
		During driving Gear position O/D	Below 1 V
MC ↔ GND (C15-7 ↔ C15-16)	R ↔ W-B	During cruise control driving COAST switch held ON	9 - 15 V
		During cruise control driving ACC switch held ON	Below 1 V
L ↔ GND (C15-8 ↔ C15-16)	G-B ↔ W-B	During cruise control driving	9 - 15 V
		Except during cruise control driving	Below 1 V
B ↔ GND (C15-9 ↔ C15-16)	Y-R ↔ W-B	Ignition switch ON	10 - 16 V
CCS ↔ GND (C15-10 ↔ C15-16)	W ↔ W-B	Ignition switch ON	10 - 16 V
		Ignition switch ON MAIN switch held ON	Below 1 V
		Ignition switch ON SET/COAST switch held ON	4.7 - 7.7 V
		Ignition switch ON RES/ACC switch held ON	2.6 - 4.2 V

CAN ↔ GND (C15-1 ↔ C15-16)	W-L ↔ W-B	Ignition switch ON Cancel switch OFF	10 - 16 V
		Ignition switch ON Cancel switch ON	Below 1 V
SPD ↔ GND (C15-12 ↔ C15-16)	V-W ↔ W-B	Engine start Car stoppage.	Below 1.5 V or 4.7 - 16 V
		During driving (Pulse generated).	3 - 7 V
IDL ↔ GND (C15-13 ↔ C15-16)	Y ↔ W-B	Ignition switch ON Throttle valve fully opened.	10 - 16 V
		Ignition switch ON Throttle valve fully closed.	Below 1.5 V
OD ↔ GND (C15-14 ↔ C15-16)	GR ↔ W-B	During cruise control driving OD switch ON.	10 - 16 V
		During cruise control driving OD switch OFF (3rd driving)	Below 1 V
MO ↔ GND (C15-15 ↔ C15-16)	P ↔ W-B	During cruise control driving ACC switch hold ON	9 - 15 V
		During cruise control driving COAST switch hold ON	Below 1 V
GND ↔ Body Ground (C15-16 ↔ Body Ground)	W-B ↔ Body Ground	Constant	Below 1 V

DI6TD-01

ECM Power Source Circuit

CIRCUIT DESCRIPTION

When the ignition switch is turned ON, battery positive voltage is applied to terminal IGSW of the ECM and the EFI main relay (Marking: EFI) control circuit in the ECM sends a signal to terminal MREL of the ECM switching on the EFI main relay.

This signal causes current to flow to the coil, closing the contacts of the EFI main relay and supplying power to terminal +B of the ECM.

If the ignition switch is turned off, the ECM continues to switch on the EFI main relay for a maximum of 2 seconds for the initial setting of the IAC valve.

WIRING DIAGRAM

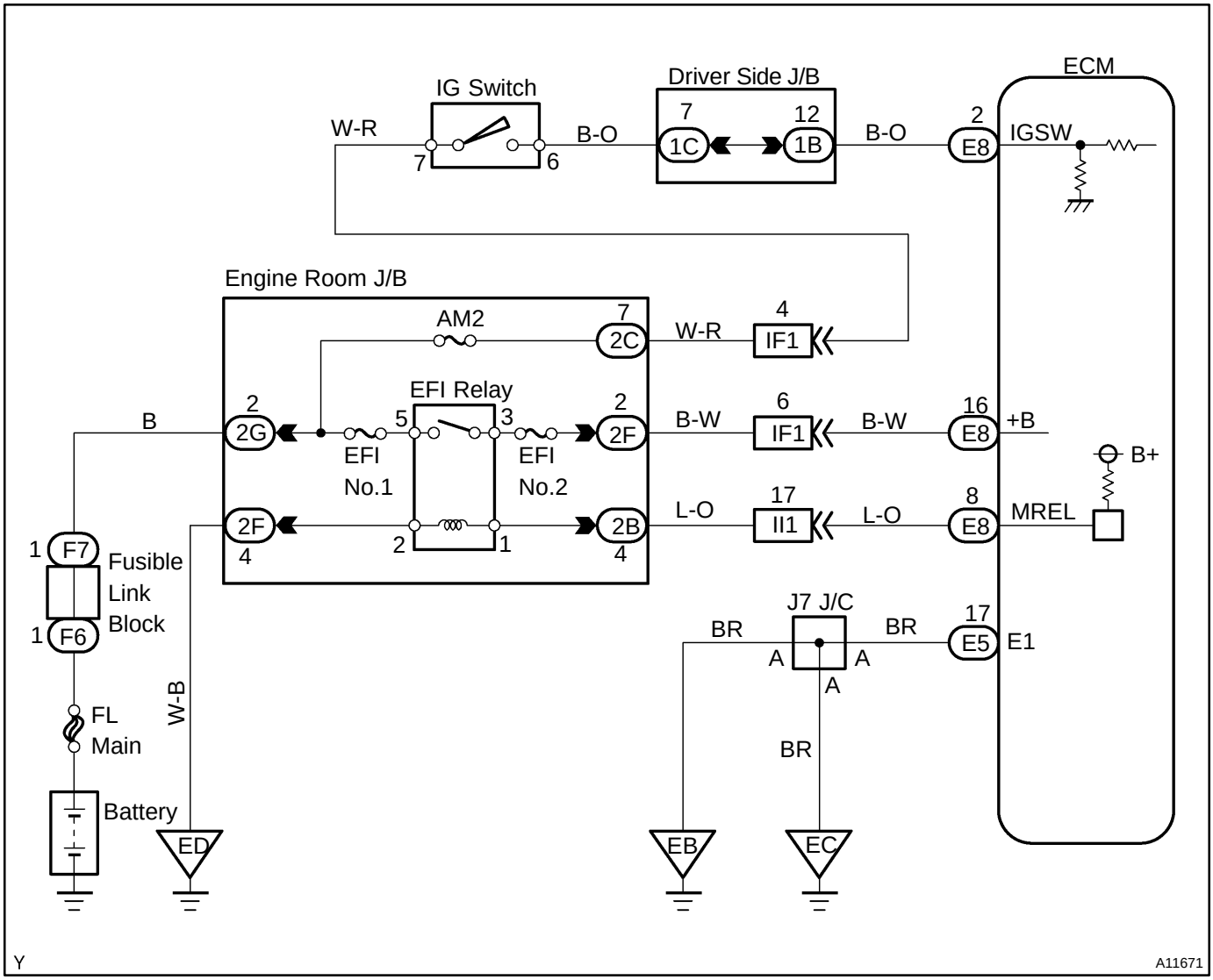

INSPECTION PROCEDURE

1	**Check voltage between terminals +B and E1 of ECM connectors.**

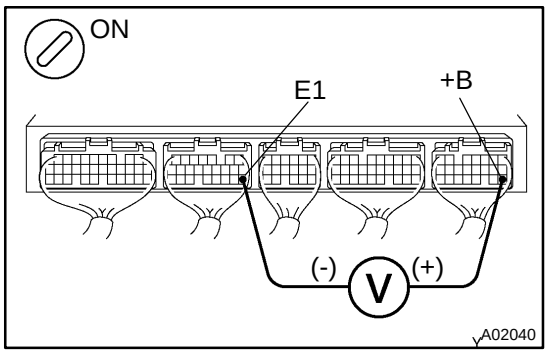

PREPARATION:

(a) Remove the glove compartment (See page SF-82).

(b) Turn the ignition switch ON.

CHECK:

Measure the voltage between terminals +B and E1 of the ECM connectors.

OK:

Voltage: 9 - 14 V

OK	**Proceed to next circuit inspection shown on problem symptoms table (See page DI-22).**

NG

2	**Check for open in harness and connector between terminal E1 of ECM and body ground (See page IN-30).**

NG	**Repair or replace harness or connector.**

OK

3	**Check voltage between terminal IGSW of ECM connector and body ground.**

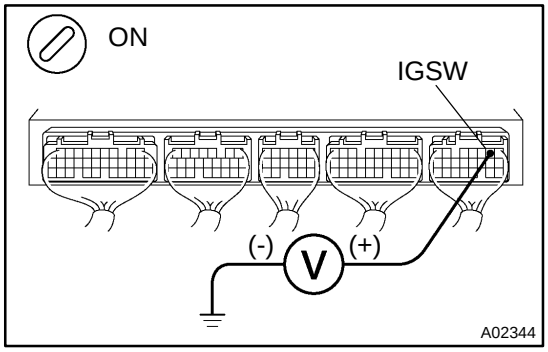

PREPARATION:

(a) Remove the glove compartment (See page SF-82).

(b) Turn the ignition switch ON.

CHECK:

Measure the voltage between terminal IGSW of the ECM connector and body ground.

OK:

Voltage: 9 - 14 V

OK	**Go to step 5.**

NG

4	Check AM2 fuse (See page DI-1 17, step 10).

NG → Check for short in all harness and components connected to AM2 fuse.

OK →

5	Check ignition switch (See page BE-16).

NG → Replace ignition switch.

OK →

Check and repair harness and connector between battery and ignition switch, and ignition switch and ECM.

6	Check voltage between terminal MREL of ECM connector and body ground.

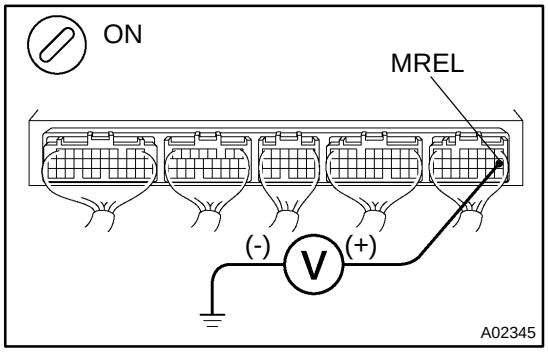

PREPARATION:

(a) Remove the glove compartment (See page SF-82).

(b) Turn the ignition switch ON.

CHECK:

Measure the voltage between terminal MREL of the ECM connector and body ground.

OK:

Voltage: 9 - 14 V

NG → Check and replace ECM (See page IN-30).

OK →

7	Check EFI No.1 fuse (See page DI-136 , step 2).

NG → Check for short in all harness and components connected to EFI No.1 fuse.

OK

8	**Check EFI No.2 fuse.**

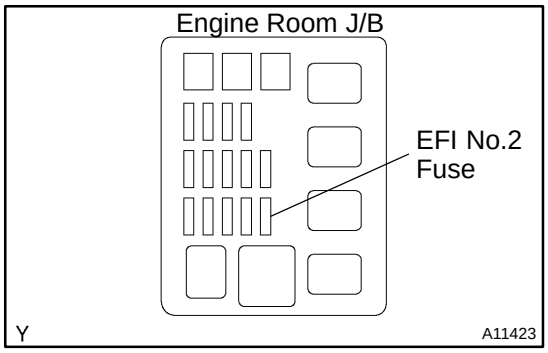

PREPARATION:
Remove the EFI No.2 fuse from the engine room J/B.
CHECK:
Check the continuity of the EFI No.2 fuse.
OK:
Continuity

NG → **Check for short in all harness and components connected to EFI No.2 fuse.**

OK

9	**Check EFI main relay (Marking: EFI) (See page SF-60).**

NG → **Replace EFI main relay.**

OK

10	**Check for open and short in harness and connector between terminal MREL of ECM and body ground (See page IN-30).**

NG → **Repair or replace harness or connector.**

OK

Check and repair harness or connector between EFI No.1 fuse and battery.

DI6TE-01

Fuel Pump Control Circuit

CIRCUIT DESCRIPTION

In the diagram below, when the engine is cranked, current flows from terminal ST of the ignition switch to the starter relay (Marking: ST) coil and also current flows to terminal STA of ECM (STA signal).
When the STA signal and NE signal are input to the ECM, Tr is turned ON, current flows to coil of the circuit opening relay (Marking: C/OPN), the relay switches on, power is supplied to the fuel pump and the fuel pump operates.
While the NE signal is generated (engine running), the ECM keeps Tr ON (circuit opening relay ON) and the fuel pump also keeps operating.

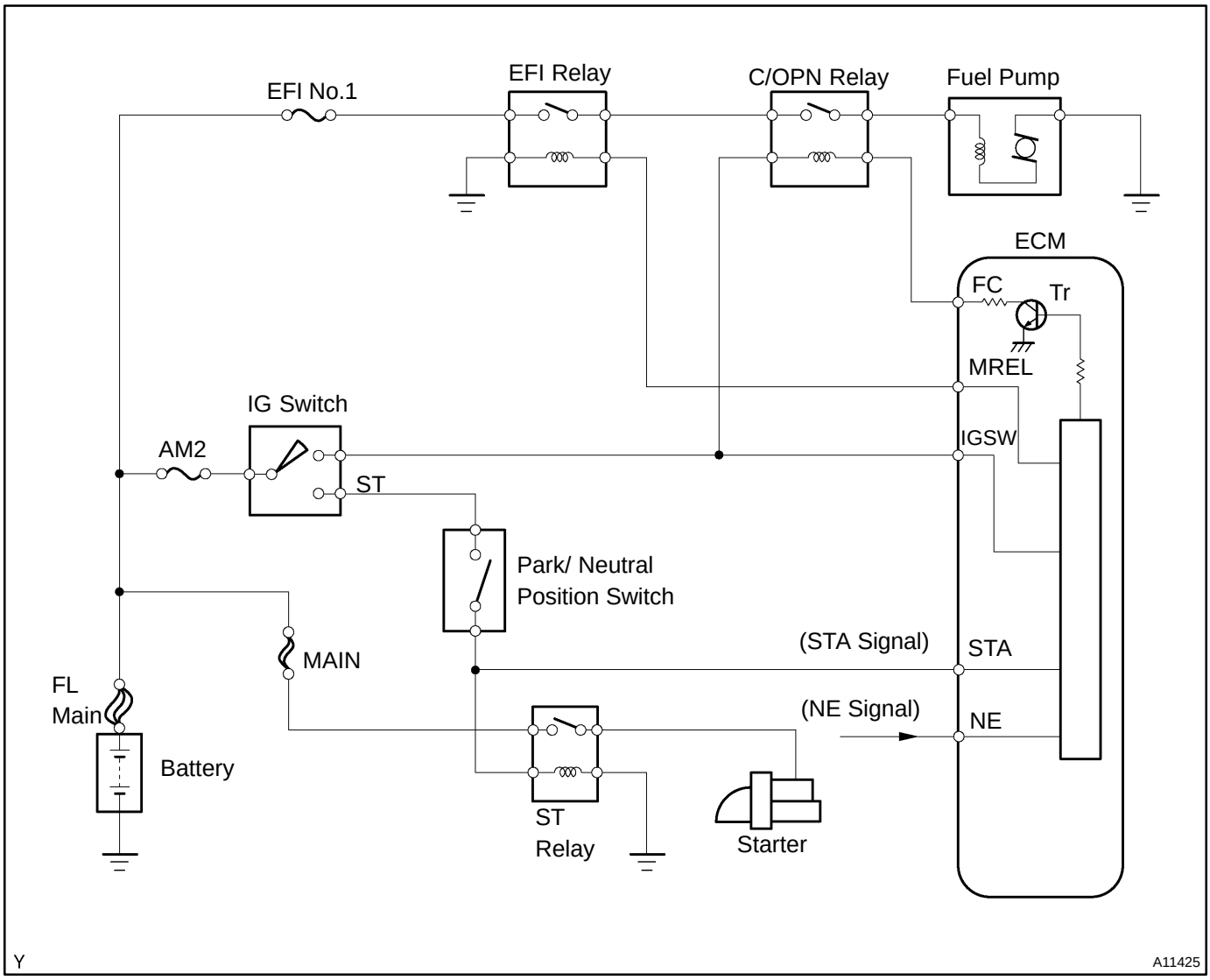

WIRING DIAGRAM

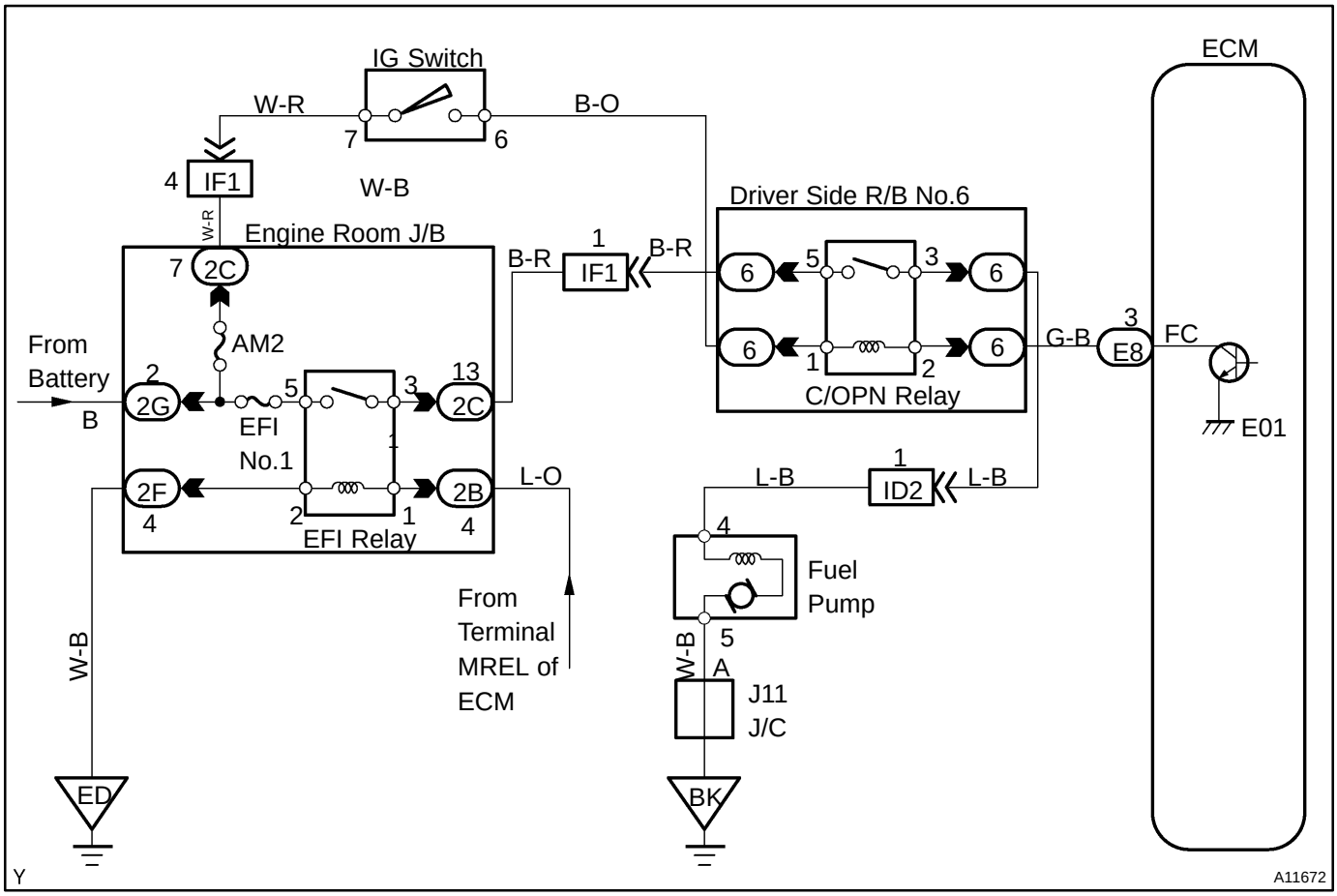

INSPECTION PROCEDURE

TOYOTA hand-held tester:

1	**Connect TOYOTA hand-held tester, and check operation of fuel pump.**

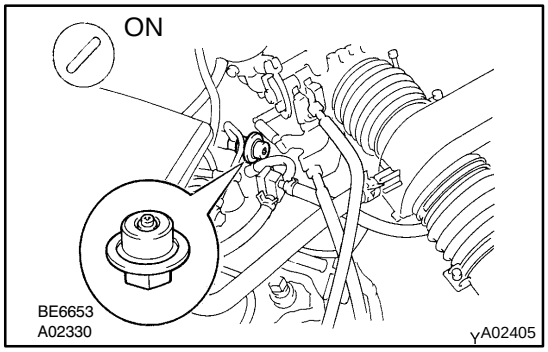

PREPARATION:1

(a) Connect the TOYOTA hand-held tester to the DLC3.

(b) Turn the ignition switch ON and push the TOYOTA hand-held tester main switch ON.

(c) Use the ACTIVE TEST mode to operate the fuel pump.

CHECK:

Check that the pulsation damper screw rises up when the fuel pump is operated by the TOYOTA hand-held tester.

OK:

The pulsation damper screw rises up.

OK	**Check for starter signal circuit (See page DI-142).**

NG

2	Check for ECM power source circuit (See page DI-148).

NG → Repair or replace.

OK

3	Check circuit opening relay (Marking: C/OPN) (See page SF-63).

NG → Replace circuit opening relay.

OK

4	Check voltage between terminal FC of ECM connector and body ground.

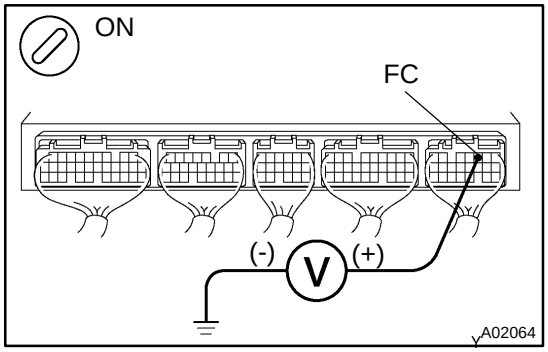

PREPARATION:

(a) Remove the glove compartment (See page SF-83).

(b) Turn the ignition switch ON.

CHECK:

Measure the voltage between terminal FC of the ECM connector and body ground.

OK:

Voltage: 9 - 14 V

OK → Go to step 5.

NG

Check for open in harness and connector between EFI main relay (Marking: EFI) and circuit opening relay (Marking: C/OPN), and circuit opening relay and ECM (See page IN-30).

5	Check fuel pump (See page SF-6).

NG → Repair or replace fuel pump.

OK

6	Check for open in harness and connector between circuit opening relay (Marking: C/OPN) and fuel pump, and fuel pump and body ground (See page IN-30).

NG → Repair or replace harness or connector.

OK

Check and replace ECM (See page IN-30).

OBD II scan tool (excluding TOYOTA hand-held tester):

1	Check operation of fuel pump.

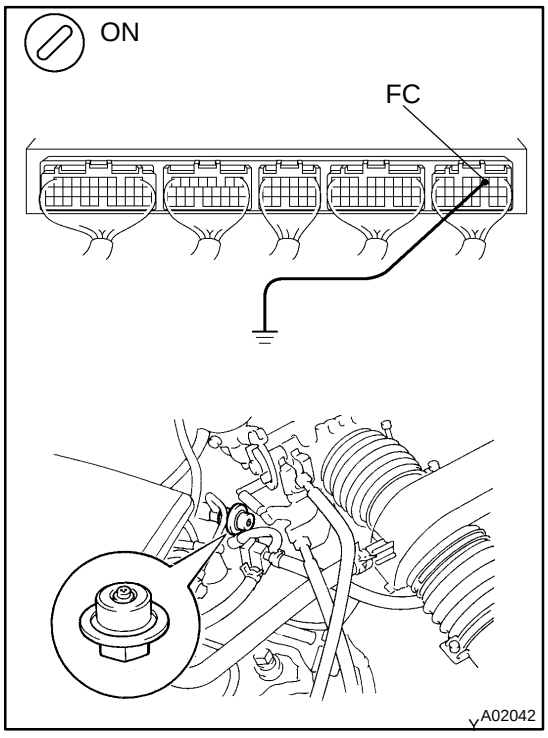

PREPARATION:

(a) Remove the glove compartment (See page SF-82).

(b) Turn the ignition switch ON.

CHECK:

(a) Connect between terminal FC of the ECM connector and body ground.

(b) Check that the pulsation damper screw rises up when connecting between terminal FC of the ECM connector and body ground.

OK:

The pulsation damper screw rises up.

OK → Check for starter signal circuit (See page DI-142).

NG

2	Check for ECM power source circuit (See page DI-148).

NG → Repair or replace.

OK

3	Check circuit opening relay (Marking: C/OPN) (See page SF-63).

NG → Replace circuit opening relay.

OK

4	Check voltage between terminal FC of ECM connector and body ground.

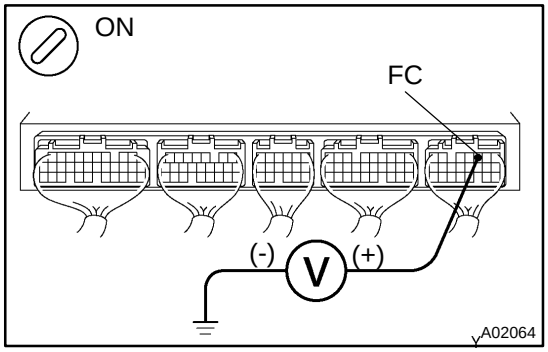

PREPARATION:
(a) Remove the glove compartment (See page SF-83).
(b) Turn the ignition switch ON.

CHECK:
Measure the voltage between terminal FC of the ECM connector and body ground.

OK:
Voltage: 9 - 14 V

OK → Go to step 5.

NG

Check for open in harness and connector between EFI main relay (Marking: EFI) and circuit opening relay (Marking: C/OPN), and circuit opening relay and ECM (See page IN-30).

5	Check fuel pump (See page SF-6).

NG → Repair or replace fuel pump.

OK

6	**Check for open in harness and connector between circuit opening relay (Marking: C/OPN) and fuel pump, and fuel pump and body ground (See page IN-30).**

NG → **Repair or replace harness or connector.**

OK

Check and replace ECM (See page IN-30).

DI08E-09

IACV Control Circuit

CIRCUIT DESCRIPTION

This circuit opens and closes the IACV (Intake Air Control Valve) in response to the engine load in order to increase the intake efficiency (ACIS: Acoustic Control Induction System).
When the engine speed is 3,700 rpm or less and the throttle valve opening angle is 30˚ or more, the ECM turns the two VSV ON or OFF and operate the IACV.

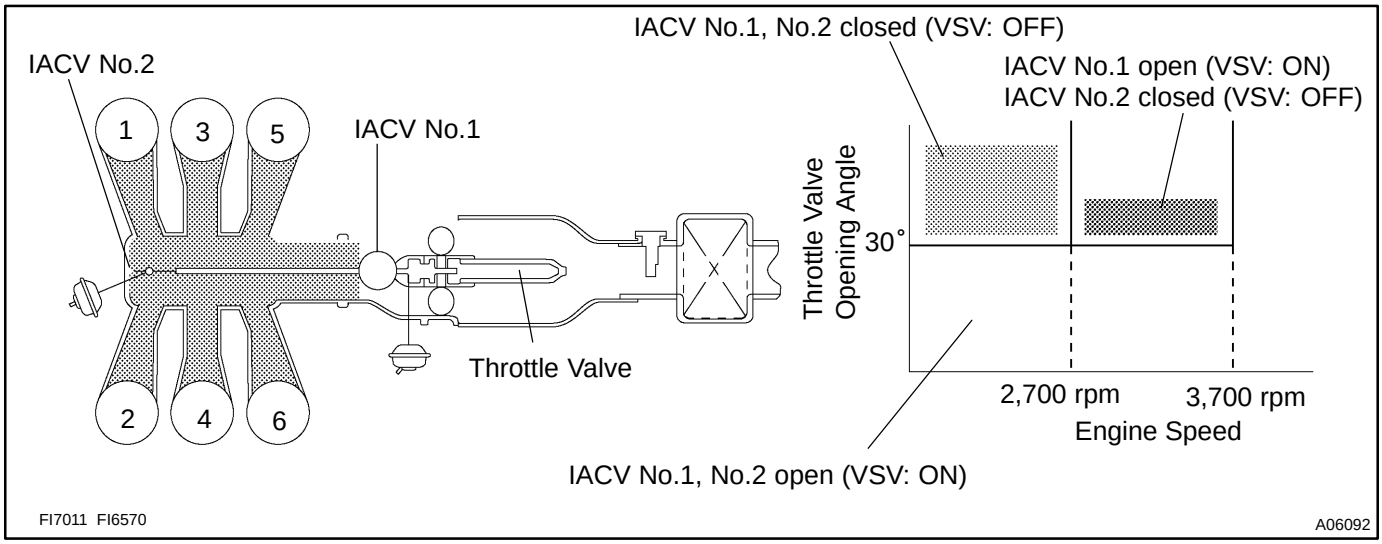

WIRING DIAGRAM

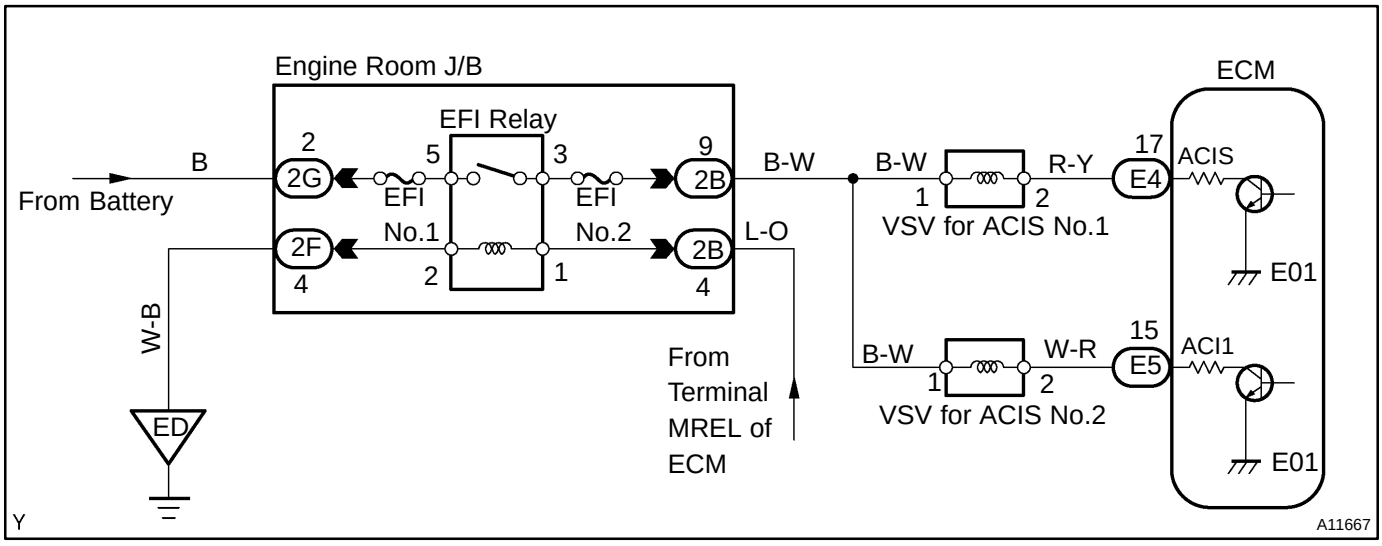

INSPECTION PROCEDURE
TOYOTA hand-held tester:

1	**Connect TOYOTA hand-held tester, and check operation of VSV for ACIS.**

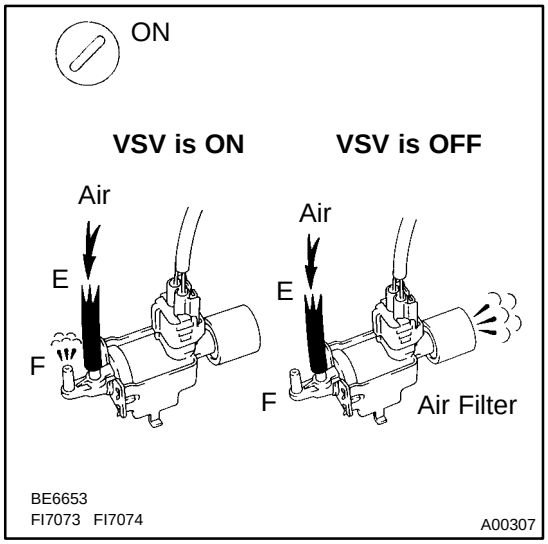

PREPARATION:

(a) Remove the fuse cover on the instrument panel.
(b) Connect the TOYOTA hand-held tester to the DLC3.
(c) Turn the ignition switch ON and TOYOTA hand-held tester main switch ON.
(d) Select the INTAKE CTRL VSV from the ACTIVE TEST menu on the TOYOTA hand-held tester.

CHECK:

Check the operation of the VSV when the VSV is operated by the TOYOTA hand-held tester.

OK:

VSV is ON:
Air from port E flows out through port F.
VSV is OFF:
Air from port E flows out through the air filter.

OK	**Check vacuum tank (See page SF-46).**

NG

2	**Check VSV for ACIS (See page SF-68).**

NG	**Replace VSV for ACIS.**

OK

3	**Check for open and short in harness and connector between EFI main relay (Marking: EFI) and ECM (See page IN-30).**

NG	**Repair or replace harness or connector.**

OK

Check and replace ECM (See page IN-30).

OBD II scan tool (excluding TOYOTA hand-held tester):

1	**Check VSV for ACIS (See page SF-68).**

NG → **Replace VSV for ACIS.**

OK

2	**Check voltage between terminals ACIS, ACI1 of ECM connector and body ground.**

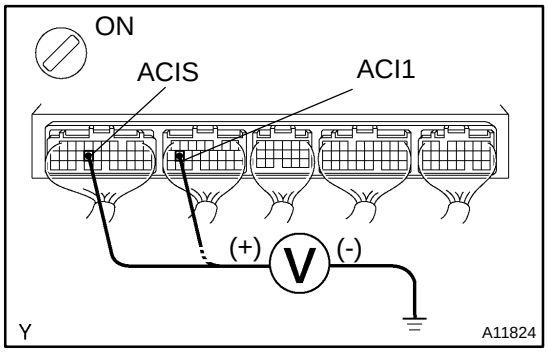

PREPARATION:

(a) Remove the glove compartment (See page SF-82).

(b) Turn the ignition switch ON.

CHECK:

Measure the voltage between terminals ACIS, ACI1 of the ECM connector and body ground.

OK:

Voltage: 9 - 14 V

NG → **Check for open and short in harness and connector between EFI main relay (Marking: EFI) and ECM (See page IN-30).**

OK

3	**Check vacuum tank (See page SF-58).**

NG → **Repair or replace.**

OK

Check and replace ECM (See page IN-30).

DI07F-09

CIRCUIT INSPECTION

DTC	P0100	Mass Air Flow Circuit Malfunction

CIRCUIT DESCRIPTION

The mass air flow meter uses a platinum hot wire. The hot wire air flow meter consists of a platinum hot wire, thermistor and a control circuit installed in a plastic housing. The hot wire air flow meter works on the principle that the hot wire and thermistor located in the intake air bypass of the housing detect any changes in the intake air temperature.

The hot wire is maintained at the set temperature by controlling the current flow through the hot wire. This current flow is then measured as the output voltage of the air flow meter.

The circuit is constructed so that the platinum hot wire and thermistor provide a bridge circuit with the power transistor controlled so that the potential of A and B remains equal to maintain the set temperature.

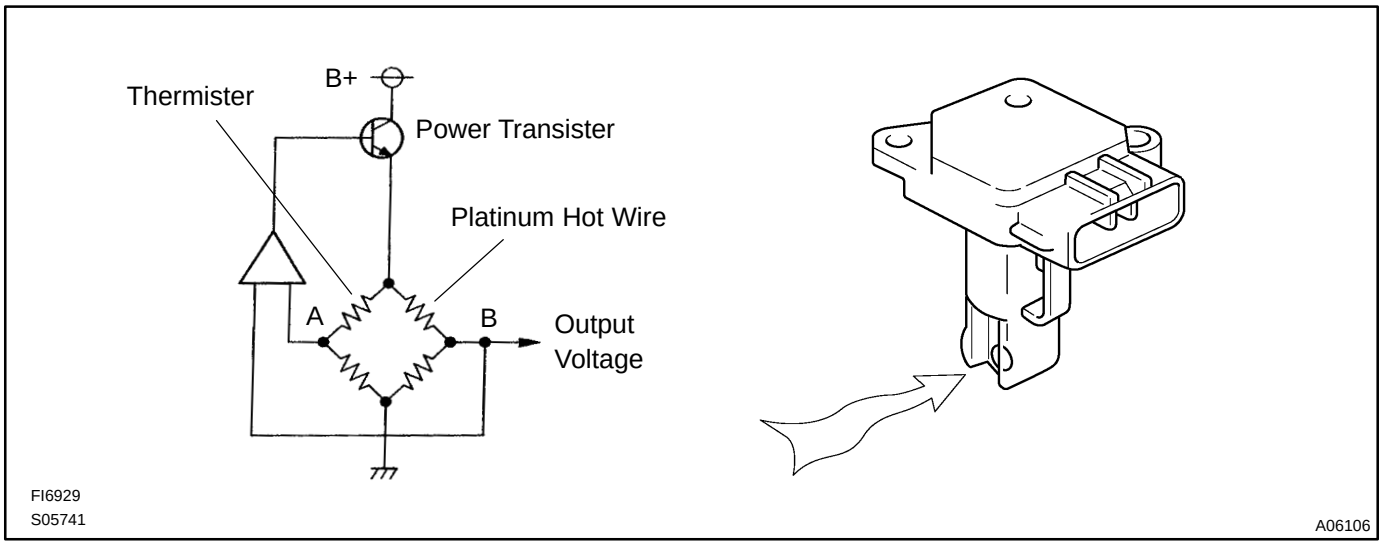

DTC No.	DTC Detecting Condition	Trouble Area
P0100	Open or short in mass air flow meter circuit with more than 3 sec. engine speed 4,000 rpm or less	●Open or short in mass air flow meter circuit ●Mass air flow meter ●ECM

If the ECM detects DTC P0100 it operates the fail-safe function, keeping the ignition timing and injection volume constantly and making it possible to drive the vehicle.

HINT:

After confirming DTC P0100, use the OBD II scan tool or TOYOTA hand-held tester to confirm the mass air flow ratio from the CURRENT DATA.

Mass Air Flow Value (gm/sec.)	Malfunction
0.0	●Mass air flow meter power source circuit open ●VG circuit open or short
271.0 or more	●E2G circuit open

WIRING DIAGRAM

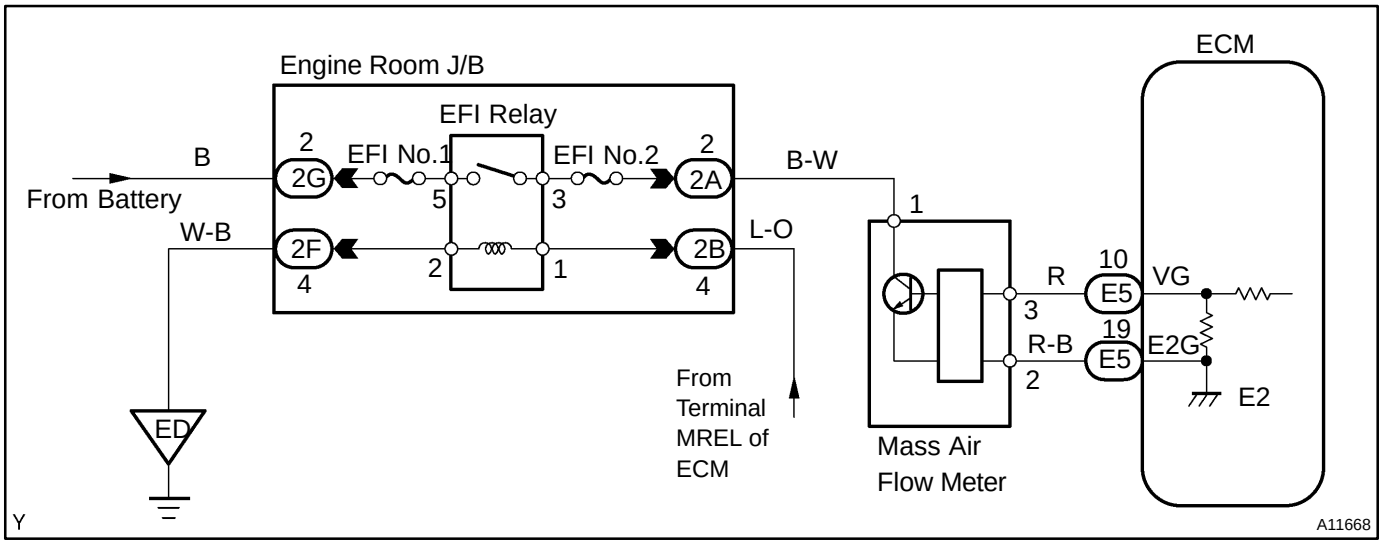

INSPECTION PROCEDURE

HINT:

Read freeze frame data using TOYOTA hand-held tester or OBD II scan tool. Because freeze frame records the engine conditions when the malfunction is detected. When troubleshooting, it is useful for determining whether the vehicle was running or stopped, the engine was warmed up or not, the air-fuel ratio was lean or rich, etc. at the time of the malfunction.

1	**Connect OBD II scan tool or TOYOTA hand-held tester, and read value of mass air flow rate.**

PREPARATION:

(a) Connect the OBD II scan tool or TOYOTA hand-held tester to the DLC3.
(b) Turn the ignition switch ON and push the OBD II scan tool or TOYOTA hand-held tester main switch ON.
(c) Start the engine.

CHECK:

Read the mass air flow rate on the OBD II scan tool or TOYOTA hand-held tester.

RESULT:

	Type I	Type II
Mass Air Flow Rate (gm/sec.)	0.0	271.0 or more

Type I	**Go to step 2.**
Type II	**Go to step 5.**

2	Check voltage of mass air flow meter power source.

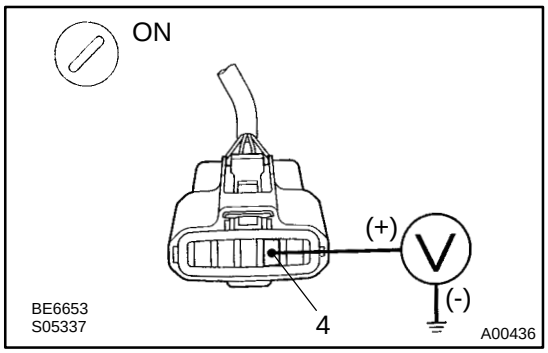

PREPARATION:

(a) Disconnect the mass air flow meter connector.

(b) Turn the ignition switch ON.

CHECK:

Measure the voltage between terminal 4 of the mass air flow meter connector and body ground.

OK:

Voltage: 9 - 14 V

NG	Check for open in harness and connector between EFI main relay (Marking: EFI) and mass air flow meter (See page IN-30).

OK

3	Check voltage between terminal VG of ECM connector and body ground.

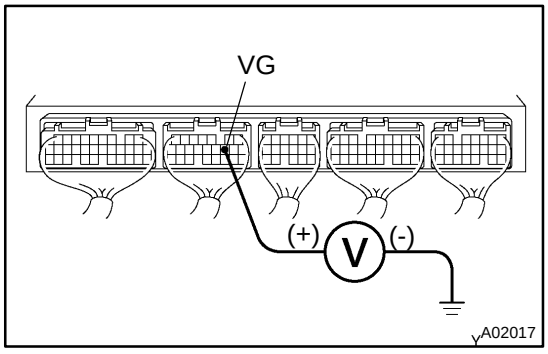

PREPARATION:

(a) Remove the glove compartment (See page SF-82).

(b) Start the engine.

CHECK:

Measure the voltage between terminal VG of the ECM connector and body ground while the engine is idling.

OK:

Voltage:
1.1 - 1.5 V (P or N position and A/C switch OFF)

OK	Check and replace ECM (See page IN-30).

NG

4	Check for open and short in harness and connector between mass air flow meter and ECM (See page IN-30).

NG	Repair or replace harness or connector.

OK

Replace mass air flow meter.

5	**Check continuity between terminal E2G of ECM connector and body ground.**

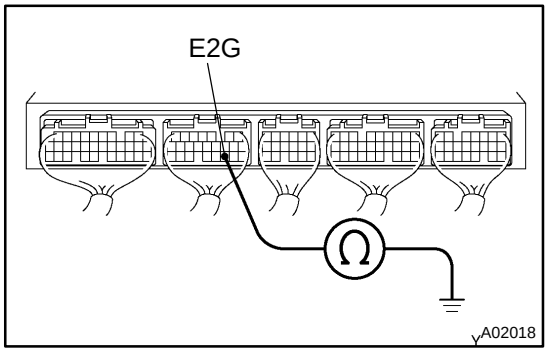

PREPARATION:
Remove the glove compartment (See page SF-82).
CHECK:
Check the continuity between terminal E2G of the ECM connector and body ground.
OK:

Continuity (1 Ω or less)

NG → **Check and replace ECM (See page IN-30).**

OK

6	**Check for open in harness and connector between mass air flow meter and ECM (See page IN-30).**

NG → **Repair or replace harness or connector.**

OK

Replace mass air flow meter.

DI07G-09

DTC	P0101	Mass Air Flow Circuit Range/Performance Problem

CIRCUIT DESCRIPTION

Refer to DTC P0100 on page DI-23 .

DTC No.	DTC Detecting Condition	Trouble Area
P0101	Conditions (a), (b) and (c) continue 10 sec. or more with engine speed NE < 900: (2 trip detection logic) (a) Throttle valve fully closed (b) Mass air flow meter output > 2.2 V (c) THW ≧ 70°C	●Mass air flow meter
	Conditions (a) and (b) continue 10 sec. or more with engine speed 1,500 rpm or more: (2 trip detection logic) (a) VTA ≧ 0.63 V (b) Mass air flow meter output ≦ 1.06 V	

INSPECTION PROCEDURE

HINT:

Read freeze frame data using TOYOTA hand-held tester or OBD II scan tool. Because freeze frame records the engine conditions when the malfunction is detected. When troubleshooting, it is useful for determining whether the vehicle was running or stopped, the engine was warmed up or not, the air-fuel ratio was lean or rich, etc. at the time of the malfunction.

1	Are there any other codes (besides DTC P0101) being output?

NO → Replace mass air flow meter.

YES

Go to relevant DTC chart (See page DI-14).

DI07H-10

DTC	P0110	Intake Air Temp. Circuit Malfunction

CIRCUIT DESCRIPTION

Fig. 1

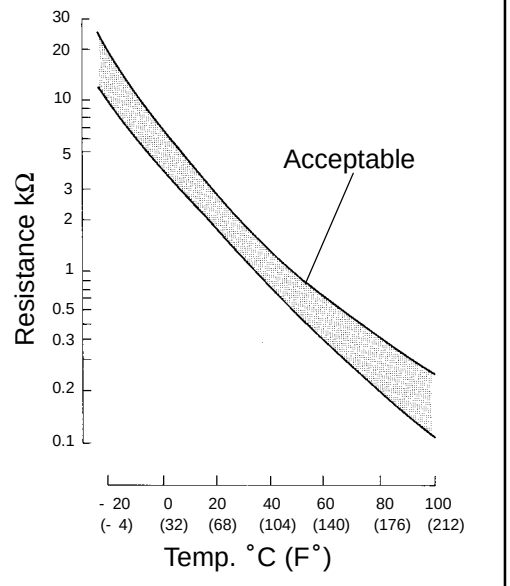

The intake air temperature sensor is built into mass air flow meter and senses the intake air temperature.
A thermistor built in the sensor changes the resistance value according to the intake air temperature.
The lower the intake air temperature, the greater the thermistor resistance value, and the higher the intake air temperature, the lower the thermistor resistance value (See Fig. 1).
The intake air temperature sensor is connected to the ECM. The 5 V power source voltage in the ECM is applied to the intake air temperature sensor from terminal THA via resistor R. That is, resistor R and the intake air temperature sensor are connected in series. When the resistance value of the intake air temperature sensor changes in accordance with changes in the intake air temperature, the potential at terminal THA also changes. Based on this signal, the ECM increases the fuel injection volume to improve driveability during cold engine operation.
If the ECM detects the DTC P0110, it operates the fail-safe function in which the intake air temperature is assumed to be 20˚C (68˚F).

DTC No.	DTC Detecting Condition	Trouble Area
P0110	Open or short in intake air temp. sensor circuit	●Open or short in intake air temp. sensor circuit ●Intake air temp. sensor (built into mass air flow meter) ●ECM

HINT:
After confirming DTC P0110, use the OBD II scan tool or TOYOTA hand-held tester to confirm the intake air temperature form the CURRENT DATA.

Temperature Displayed	Malfunction
-40 ˚C (-40˚F)	Open circuit
140˚C (284˚F) or more	Short circuit

WIRING DIAGRAM

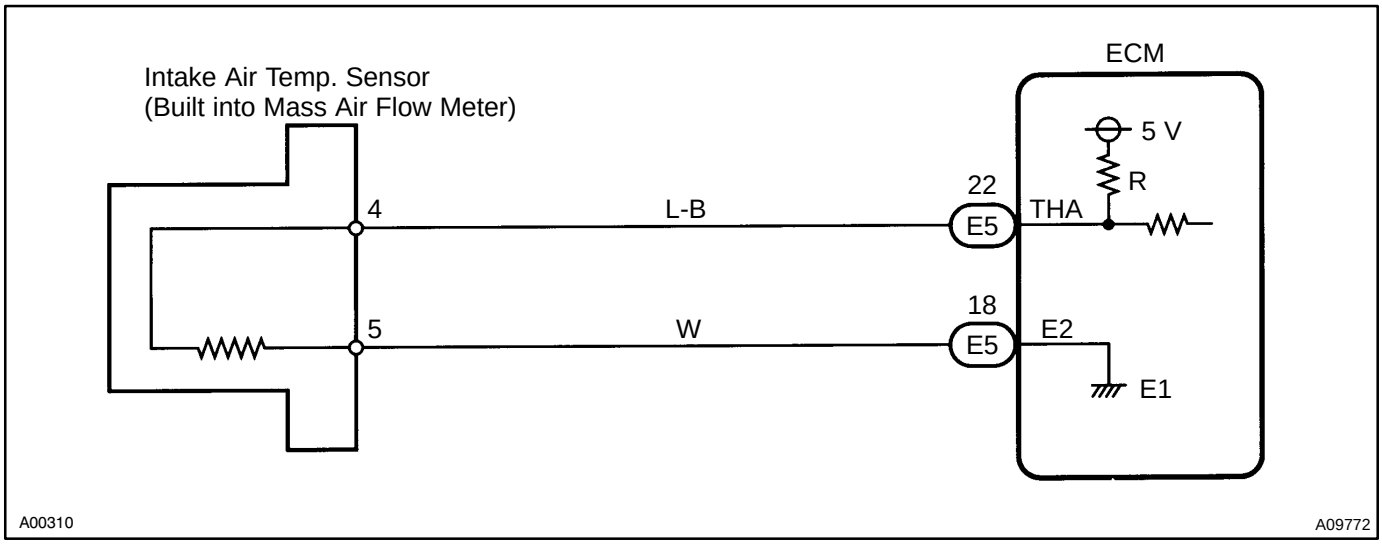

INSPECTION PROCEDURE

HINT:

- If DTCs P0110, P0115, P0120 and P1410 are output simultaneously, E2 (sensor ground) may be open.
- Read freeze frame data using TOYOTA hand-held tester or OBD II scan tool. Because freeze frame records the engine conditions when the malfunction is detected. When troubleshooting, it is useful for determining whether the vehicle was running or stopped, the engine was warmed up or not, the air-fuel ratio was lean or rich, etc. at the time of the malfunction.

1	**Connect OBD II scan tool or TOYOTA hand-held tester, and read value of intake air temperature.**

PREPARATION:

(a) Connect the OBD II scan tool or TOYOTA hand-held tester to the DLC3.

(b) Turn the ignition switch ON and push the OBD II scan tool or TOYOTA hand-held tester main switch ON.

CHECK:

Read the temperature value on the OBD II scan tool or TOYOTA hand-held tester.

OK:

Same as actual intake air temperature.

HINT:

- If there is open circuit, OBD II scan tool or TOYOTA hand-held tester indicates -40˚C (−40˚F).
- If there is short circuit, OBD II scan tool or TOYOTA hand-held tester indicates 140˚C (284˚F) or more.

NG → **-40 ˚C (-40˚F) ... Go to step 2.**
140˚C (284˚F) or more ... Go to step 4.

OK

Check for intermittent problems
(See page DI-3).

2	Check for open in harness or ECM.

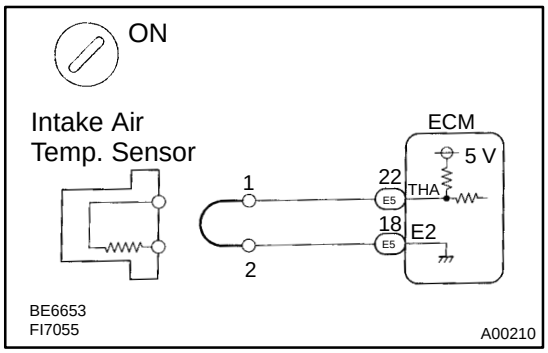

PREPARATION:

(a) Disconnect the mass air flow meter connector.
(b) Connect the sensor wire harness terminals together.
(c) Turn the ignition switch ON.

CHECK:

Read the temperature value on the OBD II scan tool or TOYOTA hand-held tester.

OK:

Temperature value: 140°C (284°F) or more

OK	Confirm good connection at sensor. If OK, replace mass air flow meter.

NG

3	Check for open in harness or ECM.

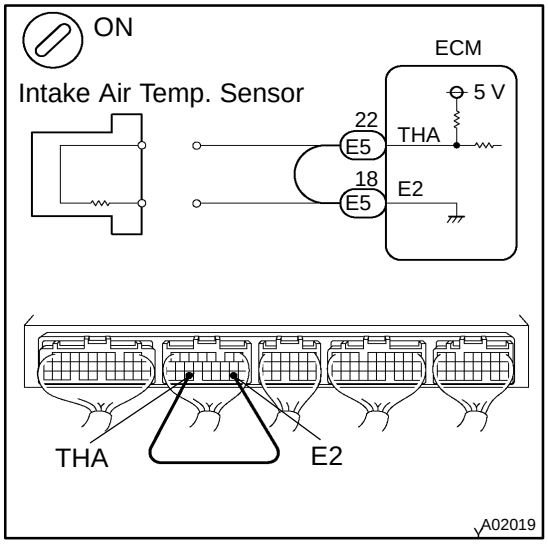

PREPARATION:

(a) Remove the glove compartment (See page SF-82).
(b) Connect between terminals THA and E2 of the ECM connector.

HINT:

The mass air flow meter connector is disconnected. Before checking, do a visual and contact pressure check for the ECM connector (See page IN-30).

(c) Turn the ignition switch ON.

CHECK:

Read the temperature value on the OBD II scan tool or TOYOTA hand-held tester.

OK:

Temperature value: 140°C (284°F) or more

OK	Open in harness between terminal E2 or THA, repair or replace harness.

NG

Confirm good connection at ECM. If OK, check and replace ECM (See page IN-30).

4	Check for short in harness and ECM.

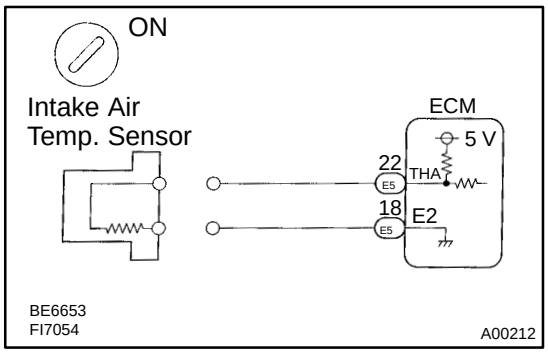

PREPARATION:

(a) Disconnect the mass air flow meter connector.

(b) Turn the ignition switch ON.

CHECK:

Read the temperature value on the OBD II scan tool or TOYOTA hand-held tester.

OK:

Temperature value: -40°C (-40°F)

OK	Replace mass air flow meter.

NG

5	Check for short in harness or ECM.

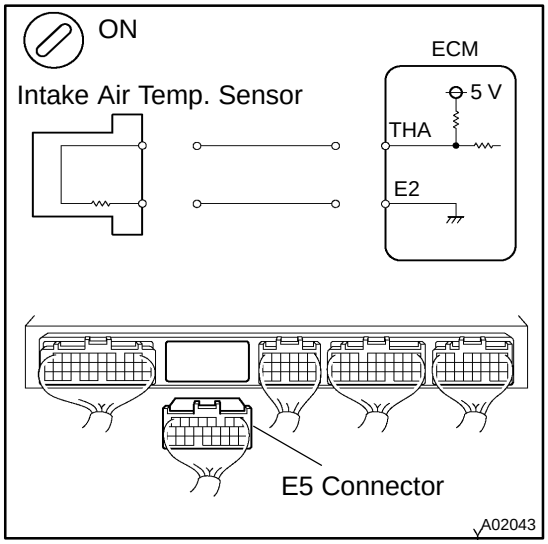

PREPARATION:

(a) Remove the glove compartment (See page SF-82).

(b) Disconnect the E5 connector from the ECM.

HINT:

Mass air flow meter connector is disconnected.

(c) Turn the ignition switch ON.

CHECK:

Read the temperature value on the OBD II scan tool or TOYOTA hand-held tester.

OK:

Temperature value: -40°C (-40°F)

OK	Repair or replace harness or connector.

NG

Check and replace ECM (See page IN-30).

DI07I-09

DTC	P0115	Engine Coolant Temp. Circuit Malfunction

CIRCUIT DESCRIPTION

A thermistor built into the engine coolant temperature sensor changes the resistance value according to the engine coolant temperature.
The structure of the sensor and connection to the ECM is the same as in the intake air temperature circuit malfunction shown on page DI-28 .
If the ECM detects the DTC P0115, it operates the fail-safe function in which the engine coolant temperature is assumed to be 80˚C (176˚C).

DTC No.	DTC Detecting Condition	Trouble Area
P0115	Open or short in engine coolant temp. sensor circuit	●Open or short in engine coolant temp. sensor circuit ●Engine coolant temp. sensor ●ECM

HINT:
After confirming DTC P0115, use the OBD II scan tool or TOYOTA hand-held tester to confirm the engine coolant temperature from the CURRENT DATA.

Temperature Displayed	Malfunction
-40 ˚C (-40˚F)	Open circuit
140˚C (284˚F) or more	Short circuit

WIRING DIAGRAM

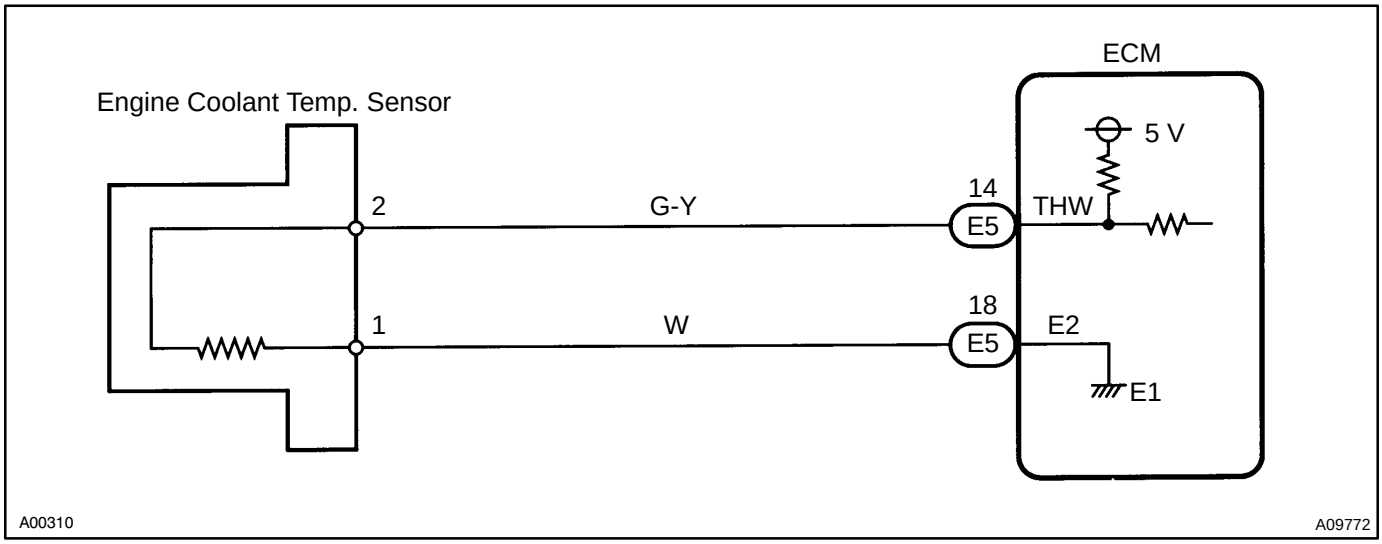

INSPECTION PROCEDURE

HINT:

- If DTCs P0110, P0115, P0120 and P1410 are output simultaneously, E2 (sensor ground) may be open.
- Read freeze frame data using TOYOTA hand-held tester or OBD II scan tool. Because freeze frame records the engine conditions when the malfunction is detected. When troubleshooting, it is useful for determining whether the vehicle was running or stopped, the engine was warmed up or not, the air-fuel ratio was lean or rich etc. at the time of the malfunction.

1	**Connect OBD II scan tool or TOYOTA hand-held tester, and read value of engine coolant temperature.**

PREPARATION:

(a) Connect the OBD II scan tool or TOYOTA hand-held tester to the DLC3.

(b) Turn the ignition switch ON and push the OBD II scan tool or TOYOTA hand-held tester main switch ON.

CHECK:

Read the temperature value on the OBD II scan tool or TOYOTA hand-held tester.

OK:

Same as actual engine coolant temperature.

HINT:

- If there is open circuit, OBD II scan tool or TOYOTA hand-held tester indicates -40˚C (-40˚F).
- If there is short circuit, OBD II scan tool or TOYOTA hand−held tester indicates 140˚C (284˚F) or more.

NG → **-40 ˚C (-40˚F) ... Go to step 2.**
140˚C (284˚F) or more ... Go to step 4.

OK

Check for intermittent problems (See page DI-3).

2	**Check for open in harness or ECM.**

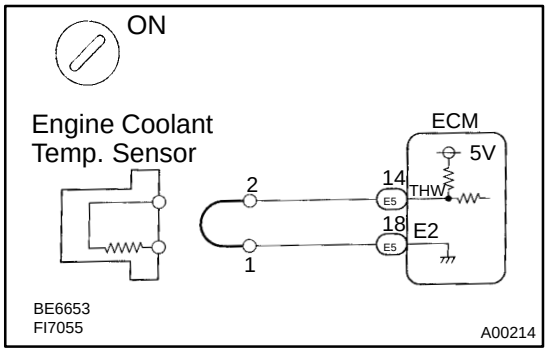

PREPARATION:

(a) Disconnect the engine coolant temp. sensor connector.

(b) Connect the sensor wire harness terminals together.

(c) Turn the ignition switch ON.

CHECK:

Read the temperature value on the OBD II scan tool or TOYOTA hand-held tester.

OK:

Temperature value: 140°C (284°F) or more

OK → **Confirm good connection at sensor. If OK, replace engine coolant temperature sensor.**

NG

3	Check for open in harness or ECM.

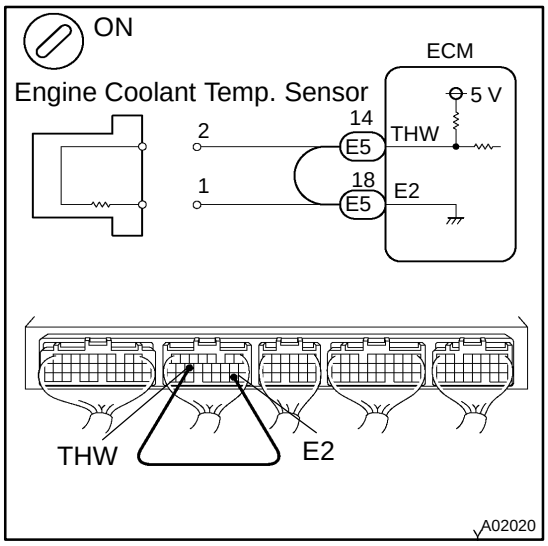

PREPARATION:

(a) Remove the glove compartment (See page SF-82).

(b) Connect between terminals THW and E2 of the ECM connector.

HINT:

The engine coolant temperature sensor connector is disconnected. Before checking, do a visual and contact pressure check for the ECM connector (See page IN-30).

(c) Turn the ignition switch ON.

CHECK:

Read the temperature value on the OBD II scan tool or TOYOTA hand-held tester.

OK:

Temperature value: 140°C (284°F) or more

OK	Open in harness between terminal E2 or THW, repair or replace harness.

NG

Confirm good connection at ECM. If OK, check and replace ECM (See page IN-30).

4	Check for short in harness and ECM.

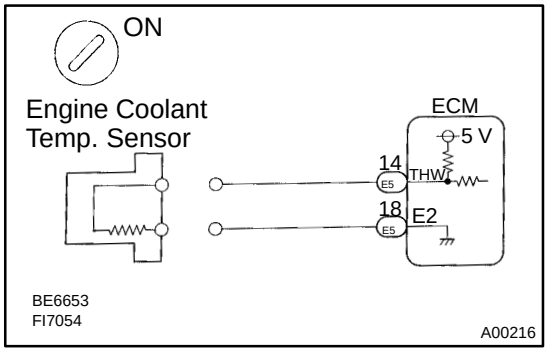

PREPARATION:

(a) Disconnect the engine coolant temperature sensor connector.

(b) Turn the ignition switch ON.

CHECK:

Read the temperature value on the OBD II scan tool or TOYOTA hand-held tester.

OK:

Temperature value: -40°C (-40°F)

OK	Replace engine coolant temperature sensor.

NG

5	Check for short in harness or ECM.

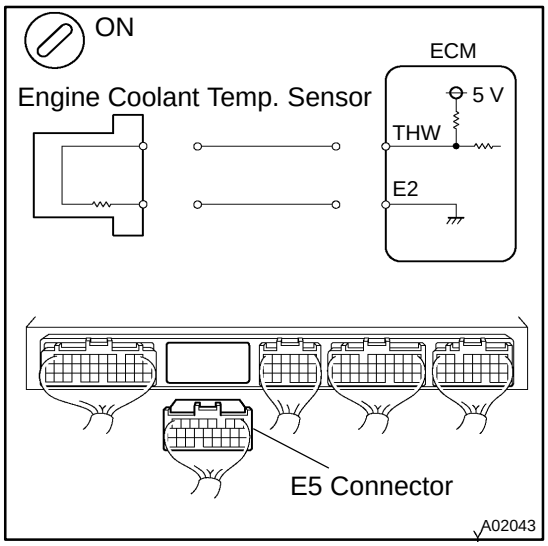

PREPARATION:

(a) Remove the glove compartment (See page SF-82).

(b) Disconnect the E5 connector from the ECM.

HINT:

The engine coolant temperature sensor connector is disconnected.

(c) Turn the ignition switch ON.

CHECK:

Read the temperature value on the OBD II scan tool or TOYOTA hand-held tester.

OK:

Temperature value: -40°C (-40°F)

OK	Repair or replace harness or connector.

NG

Check and replace ECM (See page IN-30).

DI07J-09

DTC	P0116	Engine Coolant Temp. Circuit Range/Performance Problem

CIRCUIT DESCRIPTION

Refer to DTC P0115 on page DI−32.

DTC No.	DTC Detecting Condition	Trouble Area
P0116	If THW ⍰ -7˚C (19.4˚F), 20 min. or more after starting engine, engine coolant temp. sensor value is 20˚C (68˚F) or less (2 trip detection logic)	●Cooling system ●Engine coolant temp. sensor
	If THW ⍰ -7˚C (19.4˚F), and <10˚C (50˚F), 5 min. or more after starting engine, engine coolant temp. sensor value is 20˚C (95˚F) or less (2 trip detection logic)	
	If THW ⍰ 10˚C (50˚F), 2 min. or more after starting engine, engine coolant temp. sensor value is 30˚C (86˚F) or less (2 trip detection logic)	
	When THW ≦ 35˚C (95˚F) or more and less than 60˚C (140˚F), and THA ≦ - 6.7˚C (19.9˚F) or more, when starting engine, conditions (a) and (b) continue: (2 trip detection logic) (a) Vehicle speed is changing (Not stable) (b) THW change is lower than 3˚C (5.4˚F) from THW since when starting engine	
	In case that reading value of water temp. sensor will not change more than 1˚C (1.8˚F) even after repeating 6 trips (detection logic) of adjusting speed pattern with THW more than 60˚C (140˚F) when engine starts.	

INSPECTION PROCEDURE

HINT:

- If DTCs P0115 and P0116 are output simultaneously, engine coolant temperature sensor circuit may be open. Perform troubleshooting of DTC P0115 first.
- Read freeze frame data using TOYOTA hand-held tester or OBD II scan tool. Because freeze frame records the engine conditions when the malfunction is detected. When troubleshooting, it is useful for determining whether the vehicle was running or stopped, the engine was warmed up or not, the air-fuel ratio was lean or rich, etc. at the time of the malfunction.

1	**Are there any other codes (besides DTC P0116) being output?**

YES → **Go to relevant DTC chart (See page DI-14).**

NO

2	**Check thermostat (See page CO-11).**

NG → **Replace thermostat.**

OK

Replace engine coolant temperature sensor.

DI6T1-01

DTC	P0120	Throttle/Pedal position Sensor/Switch "A" Circuit Malfunction

CIRCUIT DESCRIPTION

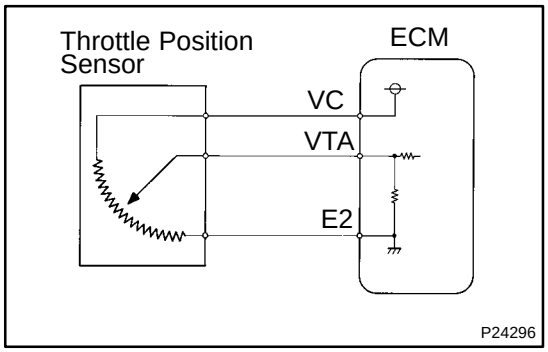

The throttle position sensor is mounted in the throttle body and detects the throttle valve opening angle. When the throttle valve is fully closed, a voltage of approximately 0.7 V is applied to terminal VTA of the ECM. The voltage applied to terminals VTA of the ECM increases in proportion to the opening angle of the throttle valve and becomes approximately 2.7 - 5.2 V when the throttle valve is fully opened. The ECM judges the vehicle driving conditions from these signals input from terminals VTA and uses them as one of the conditions for deciding the air-fuel ratio correction, power increase correction and fuel-cut control etc.

DTC No.	DTC Detecting Condition	Trouble Area
P0120	Condition (a) or (b) continues: (a) VTA ⊿ 0.1 V (b) VTA ⊿ 4.9 V	●Open or short in throttle position sensor circuit ●Throttle position sensor ●ECM

HINT:

After confirming DTC P0120, use the OBD II scan tool or TOYOTA hand-held tester to confirm the throttle valve opening percentage and closed throttle position switch condition.

Throttle valve opening position expressed as percentage		Trouble Area
Throttle valve fully closed	Throttle valve fully open	
0 %	0 %	●VC circuit open ●VTA circuit open or short
Approx. 100 %	Approx. 100 %	●E2 circuit open

WIRING DIAGRAM

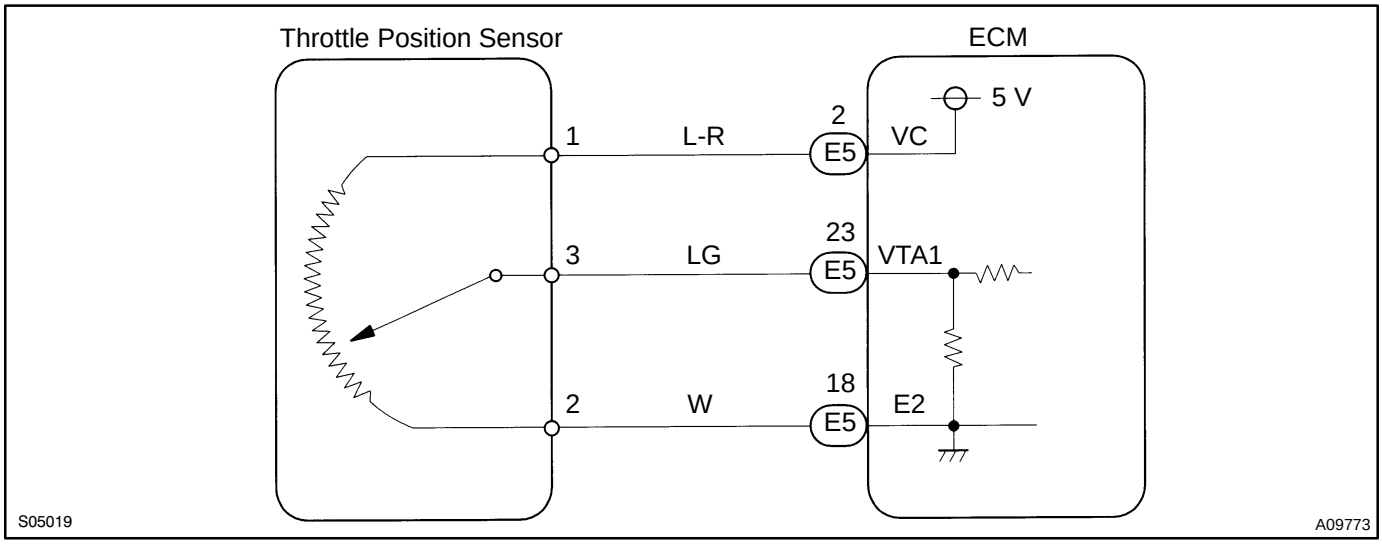

INSPECTION PROCEDURE

HINT:

- If DTCs P0110, P0115 and P0120 are output simultaneously, E2 (sensor ground) bay be open.

- Read freeze frame data using TOYOTA hand-held tester or OBD II scan tool. Because freeze frame records the engine conditions when the malfunction is detected. When troubleshooting, it is useful for determining whether the vehicle was running or stopped, the engine was warmed up or not, the air-fuel ratio was lean or rich, etc. at the time of the malfunction.

1	**Connect OBD II scan tool or TOYOTA hand-held tester, and read throttle valve opening percentage.**

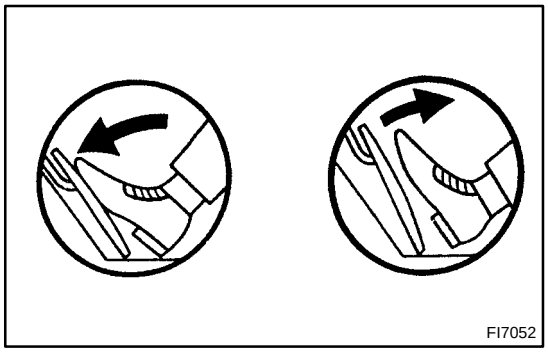

PREPARATION:

(a) Connect the OBD II scan tool or TOYOTA hand-held tester to the DLC3.

(b) Turn the ignition switch ON and push the OBD II scan tool or TOYOTA hand-held tester main switch ON.

CHECK:

Read the throttle valve opening percentage.

OK:

Throttle Valve	Throttle valve opening position expressed as percentage
Fully open	Approx. 75 %
Fully closed	Approx. 10 %

OK	**Check for intermittent problems (See page DI-3).**

NG

2	**Check voltage between terminal 1 of wire harness side connector and body ground.**

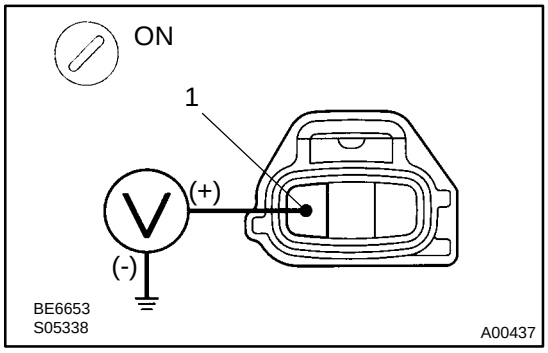

PREPARATION:

(a) Disconnect the throttle position sensor connector.

(b) Turn the ignition switch ON.

CHECK:

Measure the voltage between terminal 1 (VC) of the wire harness side connector and body ground.

OK:

Voltage: 4.5 - 5.5 V

NG	**Go to step 5.**

OK

3	**Check throttle position sensor (See page SF-33).**

NG → **Replace throttle position sensor.**

OK

4	**Check voltage between terminals VTA and E2 of ECM connector.**

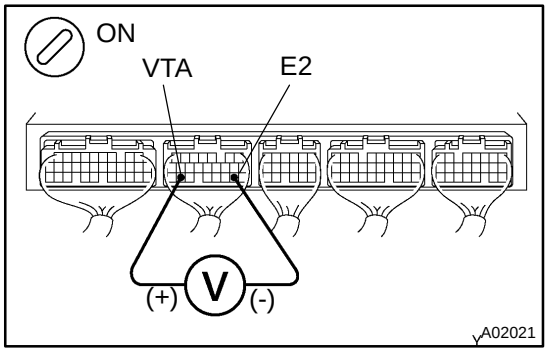

PREPARATION:

(a) Remove the glove compartment (See page SF-82).

(b) Turn the ignition switch ON.

CHECK:

Measure the voltage between terminals VTA1 and E2 of the ECM connector.

OK:

Throttle Valve	Voltage
Fully closed	0.3 - 1.0 V
Fully open	2.7 - 5.2 V

NG → **Check for open and short in harness and connector in VTA circuit between ECM and throttle position sensor (See page IN-30).**

OK

Check and replace ECM (See page IN-30).

5	**Check voltage between terminals VC and E2 of ECM connector.**

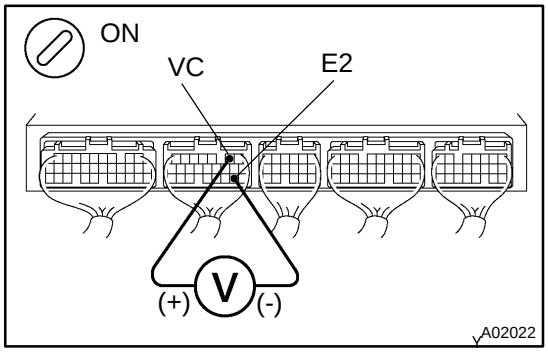

PREPARATION:

(a) Remove the glove compartment (See page SF-82).

(b) Turn the ignition switch ON.

CHECK:

Measure the voltage between terminals VC and E2 of the ECM connector.

OK:

Voltage: 4.5 - 5.5 V

NG → **Check and replace ECM (See page IN-30).**

OK

Check for open in harness and connector in VC circuit between ECM and throttle position sensor (See page IN-30).

DI07L-09

DTC	P0121	Throttle/Pedal Position Sensor/Switch ”A” Circuit Range/Performance Problem

CIRCUIT DESCRIPTION

Refer to DTC P0120 on page DI−38.

DTC No.	DTC Detecting Condition	Trouble Area
P0121	After vehicle speed has been exceeded 30 km/h (19 mph) even once, output value of throttle position sensor is out of applicable range while vehicle speed between 30 km/h (19 mph) and 0 km/h (0 mph)	●Throttle position sensor

INSPECTION PROCEDURE

HINT:

Read freeze frame data using TOYOTA hand-held tester or OBD II scan tool. Because freeze frame records the engine conditions when the malfunction is detected. When troubleshooting, it is useful for determining whether the vehicle was running or stopped, the engine was warmed up or not, the air-fuel ratio was lean or rich, etc. at the time of the malfunction.

1	**Are there any other codes (besides DTC P0121) being output?**

YES → **Go to relevant DTC chart (See page DI-14).**

NO

Replace throttle position sensor.

DI07M-14

DTC	P0125	Insufficient Coolant Temp. for Closed Loop Fuel Control

CIRCUIT DESCRIPTION

To obtain a high purification rate for the CO, HC and NOx components of the exhaust gas, a three-way catalytic converter is used, but for the most efficient use of the three-way catalytic converter, the air-fuel ratio must be precisely controlled so that it is always close to the stoichiometric air-fuel ratio.

The A/F sensor has the characteristic that provides output voltage* approximately proportional to the existing air-fuel ratio. The A/F sensor output voltage* is used to provide feedback for the ECM to control the air-fuel ratio.

By the A/F sensor output, the ECM can determine the deviation amount from the stoichiometric air-fuel ratio and control the proper injection time immediately. If the A/F sensor is malfunctioning, ECM is unable to perform accurate air-fuel ratio control.

The A/F sensor is equipped with a heater which heats the zirconia element. The heater is controlled by the ECM. When the intake air volume is low (the temp. of the exhaust gas is low), current flows to the heater to heat the sensor for accurate oxygen concentration detection.

*: The voltage value changes at the inside of the ECM only.

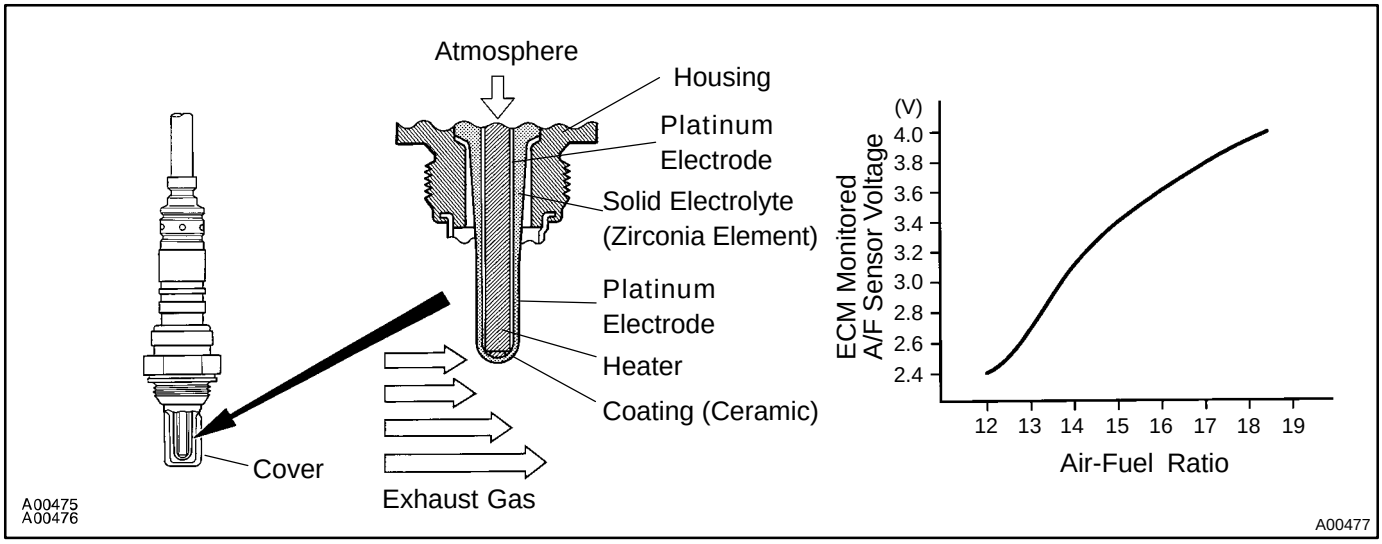

DTC No.	DTC Detecting Condition	Trouble Area
P0125	After engine is warmed up, A/F sensor output* does not change when conditions (a), (b), (c) and (d) continue for at least 1.5 min: *: Output value changes at inside of the ECM only (a) Engine speed: 1,500 rpm or more (b) Vehicle speed: 40 - 100 km/h (25 - 62 mph) (c) Throttle valve is not fully closed (d) 140 sec. or more after starting engine	●Open or short in A/F sensor (bank 1, 2 sensor 1) circuit ●A/F sensor (bank 1, 2 sensor 1) ●Air inducation system ●Fuel pressure ●Injector ●Gas leakage on exhaust sytem ●ECM

HINT:

- After confirming DTC P0125, use the OBD II scan tool or TOYOTA hand−held tester to confirm voltage output of the A/F sensor (bank 1, 2 sensor 1) from the CURRENT DATA.
- The ECM controls the voltage of the AFR+, AFL+, AFR- and AFL- terminals of the ECM to the fixed voltage. Therefore, it is impossible to confirm the A/F sensor output voltage without the OBDII scan tool or TOYOTA hand-held tester.

- OBD II scan tool (excluding TOYOTA hand-held tester) displays the one fifth of the A/F sensor output voltage which is displayed on the TOYOTA hand-held tester.

WIRING DIAGRAM

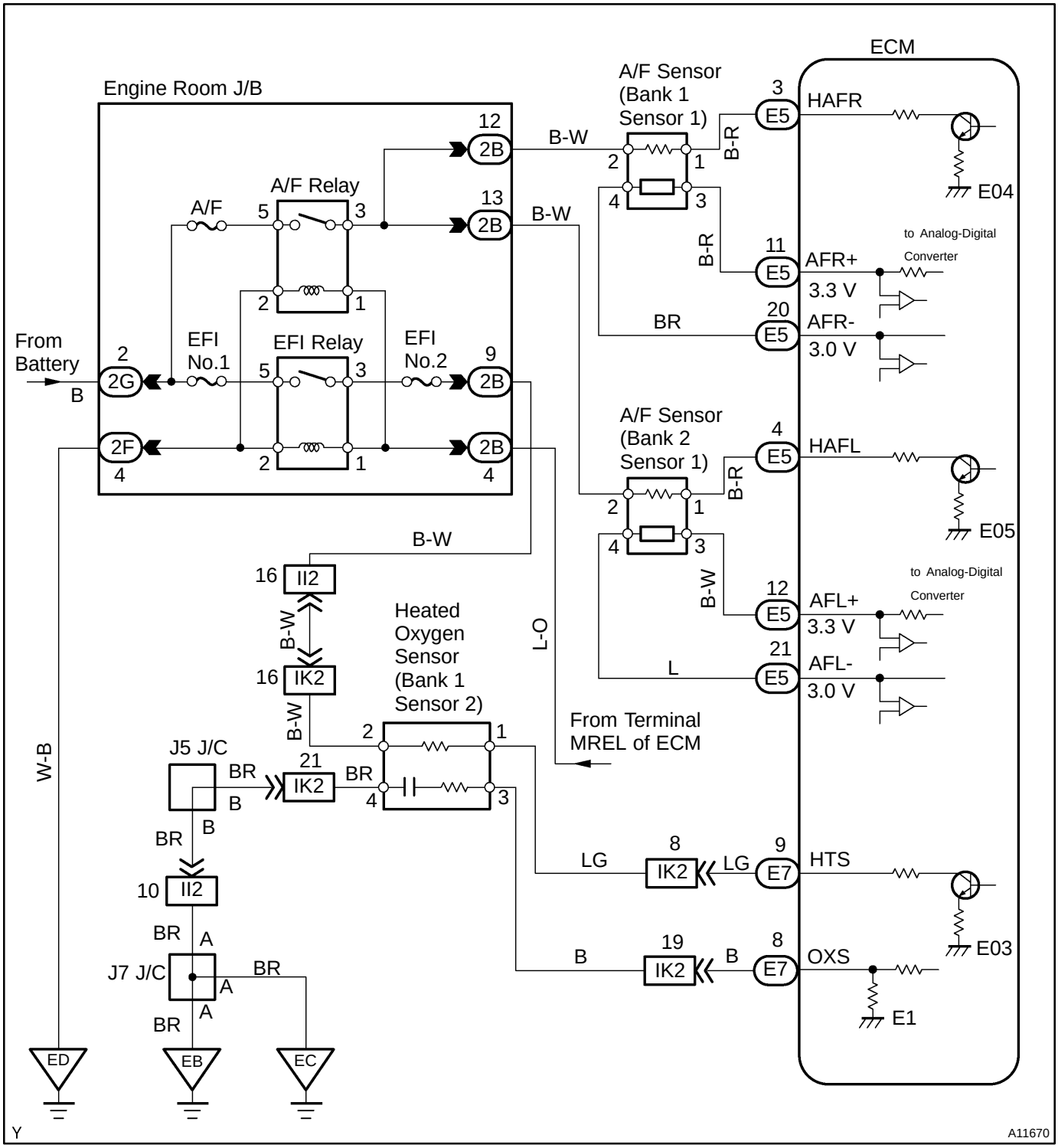

INSPECTION PROCEDURE

HINT:

Read freeze frame data using TOYOTA hand-held tester or OBD II scan tool. Because freeze frame records the engine conditions when the malfunction is detected. When troubleshooting, it is useful for determining whether the vehicle was running or stopped, the engine was warmed up or not, the air-fuel ratio was lean or rich, etc. at the time of the malfunction.

1	**Are there any other codes (besides DTC P0125) being output?**

YES → **Go to relevant DTC chart (See page DI-14).**

NO

2	**Connect the OBD II scan tool or TOYOTA hand-held tester, and read value for voltage output of A/F sensor (bank 1, 2 sensor 1).**

PREPARATION:

(a) Connect the OBD II scan tool or TOYOTA hand-held tester to the DLC3.

(b) Warm up the A/F sensor with the engine speed at 2,500 rpm for approx. 90 sec.

CHECK:

Read the voltage value of the A/F sensor on the screen of OBDII scan tool or TOYOTA hand-held tester when you perform all the following conditions.

HINT:

The voltage of the AFR+ or AFL+ terminal of the ECM is fixed at 3.3 V and the voltage of the AFR- or AFL- terminal is fixed at 3.0 V. Therefore, it is impossible to check the A/F sensor output voltage at the terminals (AFR+, AFL+/AFR-, AFL-) of the ECM.

OK:

Condition	A/F Sensor Voltage Value
Engine idling	● Not remains at 3.30 V (0.660 V*) ● Not remains at 3.8 V (0.76 V*) or more ● Not remains at 2.8 V (0.56 V*) or less *: When you use OBD II scan tool (excluding TOYOTA hand-held tester)
Engine racing	
Driving at engine speed 1,500 rpm or more and vehicle speed 40 km/h (25 mph) or more, and operate throttle valve open and close	

HINT:

- During fuel enrichment, there is a case that the output voltage of the A/F sensor is below 2.8 V (0.56 V*), it is normal.
- During fuel cut, there is a case that the output voltage of the A/F sensor is above 3.8 V (0.76 V*), it is normal.
- If the output voltage of the A/F sensor remains at 3.30 V (0.660 V*) even after performing all the above conditions, the A/F sensor circuit may be open.
- If the output voltage of the A/F sensor remains at 3.8 V (0.76 V*) or more, or 2.8 V (0.56 V*) or less even after performing all the above conditions, the A/F sensor circuit may be short.

*: When you use the OBD II scan tool (excluding TOYOTA hand-held tester).

OK → **Go to step 9.**

NG

3	Check for open and short in harness and connector between ECM and A/F sensor (bank 1, 2 sensor 1) (See page IN-30).

NG → Repair or replace harness or connector.

OK ↓

4	Check resistance of A/F sensor heater (bank 1, 2 sensor 1) (See page SF-79).

NG → Replace A/F sensor.

OK ↓

5	Check air induction system (See page SF-1).

NG → Repair or replace.

OK ↓

6	Check fuel pressure (See page SF-6).

NG → Check and repair fuel pump, pressure regulator, fuel pipe line and filter (See page SF-1).

OK ↓

7	Check injector injection (See page SF-23).

NG → Replace injector.

OK ↓

8	Check gas leakage on exhaust system.

NG → Repair or replace

OK →

Replace A/F sensor (bank 1, 2 sensor 1).

9	Perform confirmation driving pattern (See page DI-106).

Go →

10	Is there DTC P0125 being output again?

YES → Check and replace ECM (See page IN-30).

NO →

11	Did vehicle runs out of fuel in past?

NO → Check for intermittent problems (See page DI-3).

YES →

DTC P0125 is caused by running out of fuel.

DI6T2-01

DTC	P0128	Thermostat Malfunction

CIRCUIT DESCRIPTION

If the water temperature becomes 75˚C (167˚F) or more, it is abnormal.
If not due to the thermostat malfunction, it is abnormal.

DTC No.	DTC Detecting Condition	Trouble Area
P0128	Condition (a), (b) or (c): (a) After starting engine at 20˚C (68˚F) (b) After engine is warmed up (c) THW < 75˚C (167˚F)	●Thermostat ●Cooling system ●Engine coolant temp. sensor ●ECM

INSPECTION PROCEDURE

HINT:
Read freeze frame data using TOYOTA hand-held tester or OBD II scan tool. Because freeze frame records the engine conditions when the malfunction is detected. When troubleshooting, it is useful for determining whether the vehicle was running or stopped, the engine was warmed up or not, the air-fuel ratio was lean or rich, etc. at the time of the malfunction.

1	**Check thermostat (See page CO-11).**

NG → **Replace thermostat.**

YES

2	**Are there any other codes (besides DTC P0128) being output?**

YES → **Go to relevant DTC chart (See page DI–14).**

NG

Check and replace ECM (See page IN-30).

DI07Q-09

DTC	P0136	Oxygen Sensor Circuit Malfunction (Bank 1 Sensor 2)

CIRCUIT DESCRIPTION

Refer to DTC P0125 on page DI-43 .

DTC No.	DTC Detecting Condition	Trouble Area
P0136	Voltage output of heated oxygen sensor remains at 0.4 V or more or 0.55 V or less when vehicle is driven at 50 km/h (31 mph) or more after engine is warmed up (2 trip detection logic)	●Open or short in heated oxygen sensor circuit ●Heated oxygen sensor

HINT:

- Bank 1 refers to the bank that includes cylinder No.1.
- Sensor 2 refers to the sensor farther away from the engine body.

WIRING DIAGRAM

Refer to DTC P0125 on page DI-43 .

INSPECTION PROCEDURE

HINT:

Read freeze frame data using TOYOTA hand-held tester or OBD II scan tool. Because freeze frame records the engine conditions when the malfunction is detected. When troubleshooting, it is useful for determining whether the vehicle was running or stopped, the engine was warmed up or not, the air-fuel ratio was lean or rich, etc. at the time of the malfunction.

1	**Are there any other codes (besides DTC P0136) being output?**

YES → **Go to relevant DTC chart (See page DI-14).**

NO

2	**Check for open and short in harness and connector between ECM and heated oxygen sensor (See page IN-30).**

NG → **Repair or replace harness or connector.**

OK

3	**Check output voltage of heated oxygen sensor.**

PREPARATION:

(a) Connect the OBD II scan tool or TOYOTA hand-held tester to the DLC3.

(b) Warm up the engine to normal operating temperature.

CHECK:

Read the voltage output of the heated oxygen sensor when the engine is suddenly raced.

HINT:

Perform quick racing to 4,000 rpm 3 min. using the accelerator pedal.

OK:

Heated oxygen sensor output voltage: Alternates from 0.4 V or less to 0.6 V or more.

OK → **Check that each connector is properly connected.**

NG

Replace heated oxygen sensor.

DTC	P0141	Oxygen Sensor Heater Circuit Malfunction (Bank 1 Sensor 2)

CIRCUIT DESCRIPTION

Refer to DTC P0125 on page DI-43 .

DTC No.	DTC Detecting Condition	Trouble Area
P0141	When heater operates, heater current exceeds 2.35 A (2 trip detection logic)	●Open or short in heater circuit of heated oxygen sensor ●Heated oxygen sensor heater ●ECM
	Heater current of 0.2 A or less when heater operates (2 trip detection logic)	

HINT:

- Bank 1 refers to the bank that includes cylinder No.1.
- Sensor 2 refers to the sensor farther away from the engine body.

WIRING DIAGRAM

Refer to DTC P0125 on page DI-43 .

INSPECTION PROCEDURE

HINT:

Read freeze frame data using TOYOTA hand-held tester or OBD II scan tool. Because freeze frame records the engine conditions when the malfunction is detected. When troubleshooting, it is useful for determining whether the vehicle was running or stopped, the engine was warmed up or not, the air-fuel ratio was lean or rich, etc. at the time of the malfunction.

1	**Check voltage between terminal HTS of ECM connector and body ground.**

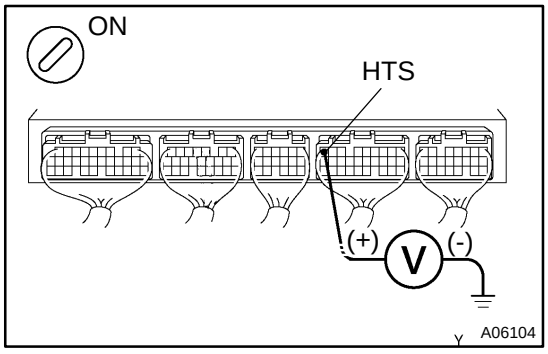

PREPARATION:

(a) Remove the glove compartment (See page SF-82).

(b) Turn the ignition switch ON.

CHECK:

Measure the voltage between terminal HTS of the ECM connector and body ground.

OK:

Voltage: 9 - 14 V

OK	**Check and replace ECM (See page IN-30).**

NG

2	**Check resistance of heated oxygen sensor heater (See page SF-81).**

NG	**Replace heated oxygen sensor.**

OK

Check and repair harness or connector between EFI main relay (Marking: EFI) and heated oxygen sensor, and heated oxygen sensor and ECM (See page IN-30).

DI07S-10

DTC	P0300	Random/Multiple Cylinder Misfire Detected

DTC	P0301	Cylinder 1 Misfire Detected

DTC	P0302	Cylinder 2 Misfire Detected

DTC	P0303	Cylinder 3 Misfire Detected

DTC	P0304	Cylinder 4 Misfire Detected

DTC	P0305	Cylinder 5 Misfire Detected

DTC	P0306	Cylinder 6 Misfire Detected

CIRCUIT DESCRIPTION

Misfire: The ECM uses the crankshaft position sensor and camshaft position sensor to monitor changes in the crankshaft rotation for each cylinder.

The ECM counts the number of times the engine speed change rate indicates that misfire has occurred. When the misfire rate equals or exceeds the count indicating that the engine condition has deteriorated, the MIL lights up.

If the misfire rate is high enough and the driving conditions will cause catalyst overheating, the MIL blinks when misfiring occurs.

DTC No.	DTC Detecting Condition	Trouble Area
P0300	Misfiring of random cylinders is detected during any particular 200 or 1,000 revolutions	●Open or short in engine wire ●Connector connection ●Vacuum hose connection ●Ignition system ●Injector ●Fuel pressure ●Mass air flow meter ●Engine coolant temp. sensor ●Compression pressure ●Valve clearance ●Valve timing ●ECM
P0301 P0302 P0303 P0304 P0305 P0306	For any particular 200 revolutions for engine, misfiring is detected which can cause catalyst overheating (This causes MIL to blink)	
	For any particular 1,000 revolutions of engine, misfiring is detected which causes a deterioration in emission (2 trip detection logic)	

HINT:
When the 2 or more codes for a misfiring cylinder are recorded repeatedly but no Random Misfire code is recorded, it indicates that the misfires were detected and recorded at different times.

WIRING DIAGRAM

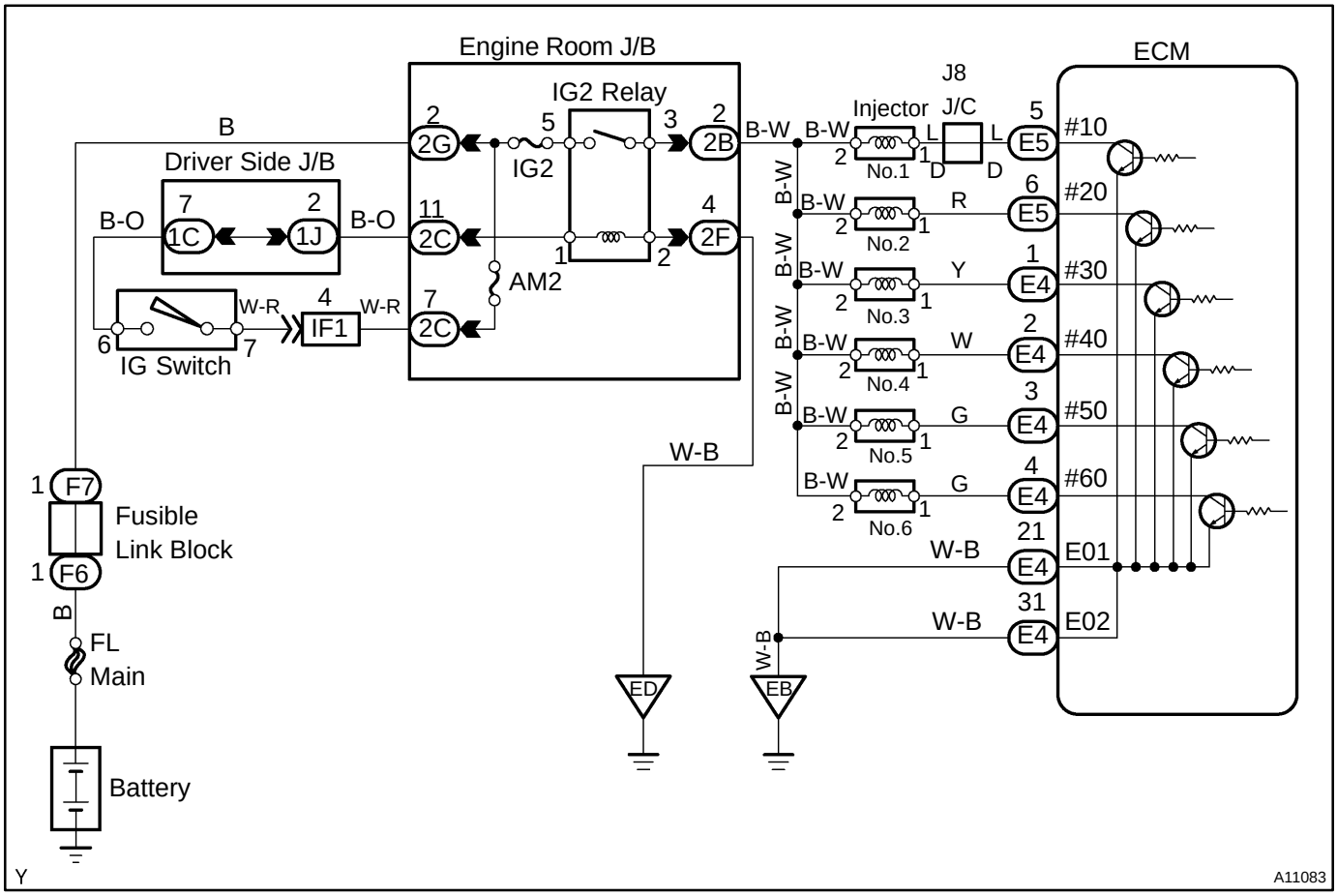

CONFIRMATION DRIVING PATTERN

(a) Connect the TOYOTA hand-held tester or OBD II scan tool.
(b) Record the DTC and the freeze frame data.
(c) Use the TOYOTA hand-held tester to set to the check mode (See page DI-3).
(d) Drive the vehicle several times with the engine speed, load and its surrounding range shown with the ENGINE SPD, CALC LOAD in the freeze frame data or the MISFIRE RPM, MISFIRE LOAD in the data list.

If you have no TOYOTA hand-held tester, turn the ignition switch OFF after the symptom is simulated the first time. Then repeat the simulation process again.
HINT:
In order to memorize DTC of misfire, it is necessary to drive around MISFIRE RPM, MISFIRE LOAD in the data list for the following period of time.

Engine Speed	Time
Idling	3 minutes 30 seconds or more
1,000 rpm	3 minutes or more
2,000 rpm	1 minute 30 seconds or more
3,000 rpm	1 minute or more

(e) Check whether there is misfire or not by monitoring DTC and the freeze frame data. After that, record them.
(f) Turn the ignition switch OFF and wait at least 5 seconds.

INSPECTION PROCEDURE

HINT:

- If is case that DTC besides misfire is memorized simultaneously, first perform the troubleshooting for them.
- Read freeze frame data using TOYOTA hand-held tester or OBD II scan tool. Because freeze frame data records the engine conditions when the malfunction is detected. When troubleshooting, it is useful for determining whether the vehicle was running or stopped, the engine was warmed up or not, the air-fuel ratio was lean or rich, etc. at the time of the malfunction.
- When the vehicle is brought to the workshop and the misfire is not occurred, misfire can be confirmed by reproducing the condition or freeze frame data. Also, after finishing the repair, confirm that there is no misfire. (See the confirmation driving pattern)
- When either of SHORT FT #1, LONG FT #1, SHORT FT #2 or LONG FT #2 in the freeze frame data is besides the range of ±20 %, there is a possibility that the air-fuel ratio is inclining either to ”rich” (-20 % or less) or ”lean” (+20 % or more).
- When COOLANT TEMP in the freeze frame data is less than 80˚C (176˚F), there is a possibility or misfire only during warming up.
- In the case that misfire cannot be reproduced, the reason may be because of the driving with lack or fuel, the use of improper fuel, a stain of ignition plug, and etc.

1	**Check wire harness, connector and vacuum hose in engine room.**

CHECK:

(a) Check the connection conditions of wire harness and connector.
(b) Check the disconnection, piping and break of vacuum hose.

NG → **Repair or replace, then confirm that there is no misfire (See the confirmation driving pattern).**

OK

2	Check spark plug and spark of misfiring cylinder.

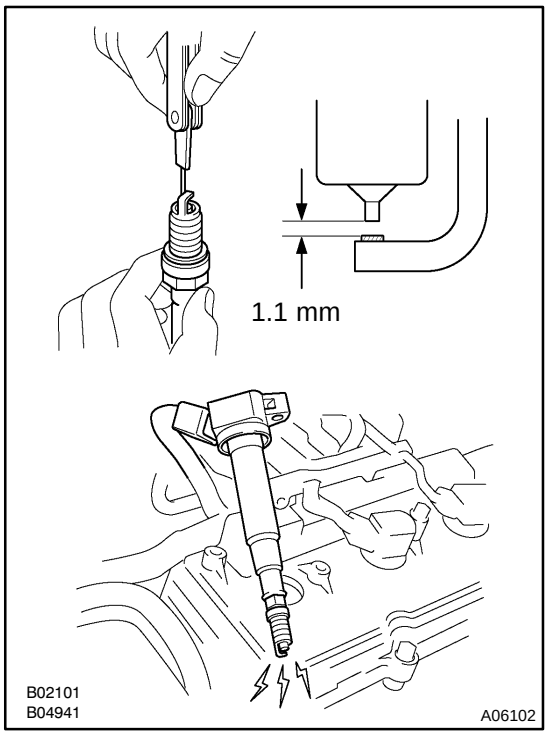

PREPARATION:

(a) Remove the ignition coil (See page IG-5).

(b) Remove the spark plug.

CHECK:

(a) Check spark plug type.

(b) Check the electrode for carbon deposits.

(c) Check electrode gap.

OK:

(a) Iridium-tipped spark plug
Recommended spark plug:
DENSO made: SK20R11
NGK made: IFR6A11
(b) No large carbon deposit present.
Not wet with gasoline or oil.
(c) Electrode gap: 1.1 mm (0.043 in.)

PREPARATION:

(a) Install the spark plug to the ignition coil, and connect the ignition coil connector.

(b) Disconnect the injector connector.

(c) Ground the spark plug.

CHECK:

Check if spark occurs while engine is being cranked.

OK:

Spark jumps across electrode gap.

NG	Replace or check ignition system (See page IG-1).

OK

3	Check voltage of ECM terminal for injector of failed cylinder.

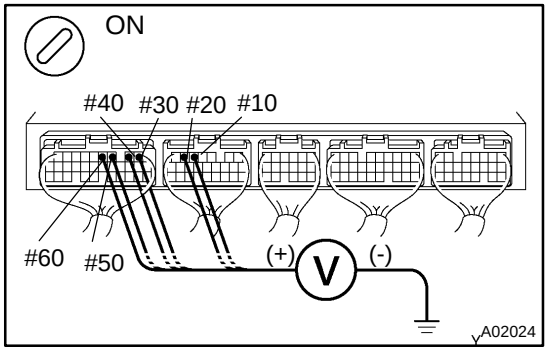

PREPARATION:

(a) Remove the glove compartment (See page SF-82).

(b) Turn the ignition switch ON.

CHECK:

Measure the voltage between applicable terminal of the ECM connector and body ground.

OK:

Voltage: 9 - 14 V

Reference: INSPECTION USING OSCILLOSCOPE

With the engine idling, check the waveform between terminals #10 - #60 and E01 of the ECM connector.

HINT:

The correct waveform is as shown.

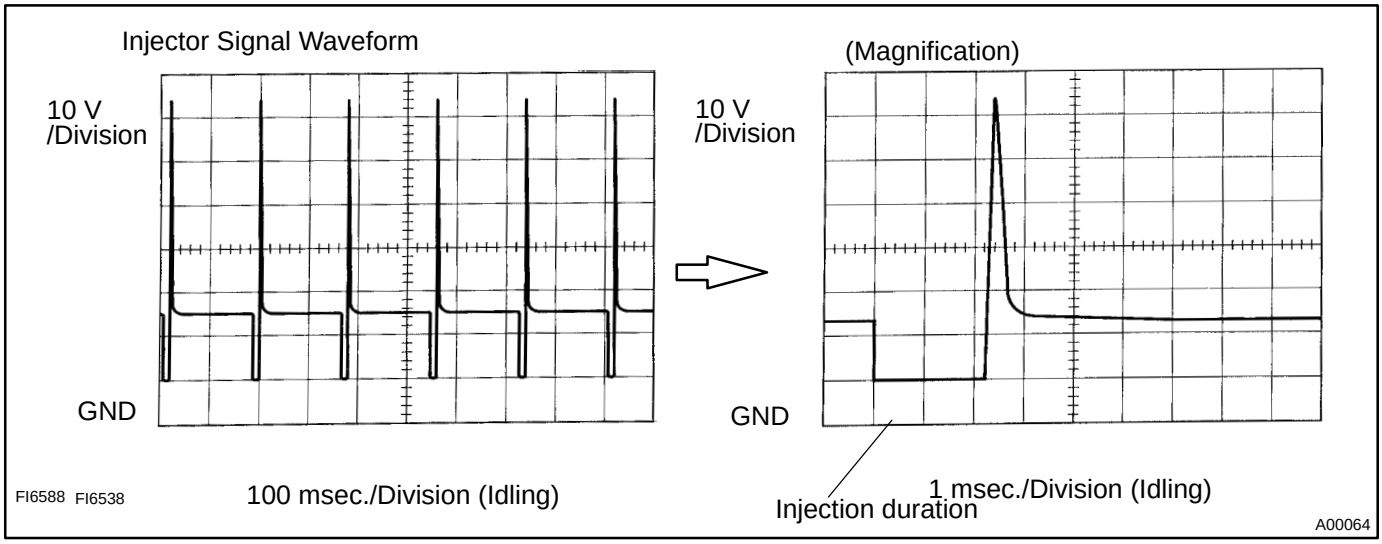

OK	**Go to step 5.**

NG

4	**Check resistance of injector of misfiring cylinder (See page SF-19).**

NG	**Replace injector.**

OK

Check for open and short in harness and connector between injector and ECM (See page IN-30).

5	**Check fuel pressure (See page SF-6).**

NG	**Check and repair fuel pump, fuel pipe line and filter (See page SF-1).**

OK

6	Check injector injection (See page SF-23).

NG → Replace injector.

OK

7	Check mass air flow meter (See page SF-31) and engine coolant temperature sensor (See page SF-73).

NG → Repair or replace.

OK

Check compression pressure (See page EM-3), valve clearance (See page EM-4) and valve timing (See page EM-21).

DI07T-09

DTC	P0325	Knock Sensor 1 Circuit Malfunction (Bank 1)

DTC	P0330	Knock Sensor 2 Circuit Malfunction (Bank 2)

CIRCUIT DESCRIPTION

Each of knock sensor is fitted to the right bank and left bank of the cylinder block to detect engine knocking. This sensor contains a piezoelectric element which generates a voltage when it becomes deformed, which occurs when the cylinder block vibrates due to knocking. If engine knocking occurs, ignition timing is retarded to suppress it.

DTC No.	DTC Detecting Condition	Trouble Area
P0325	No knock sensor 1 signal to ECM with engine speed between 2,000 rpm and 5,600 rpm	●Open or short in knock sensor 1 circuit ●Knock sensor 1 (looseness) ●ECM
P0330	No knock sensor 1 signal to ECM with engine speed between 2,000 rpm and 5,600 rpm	●Open or short in knock sensor 2 circuit ●Knock sensor 2 (looseness) ●ECM

If the ECM detects the above diagnosis conditions, it operates the fail-safe function in which the corrective retard angle value is set to the maximum value.

WIRING DIAGRAM

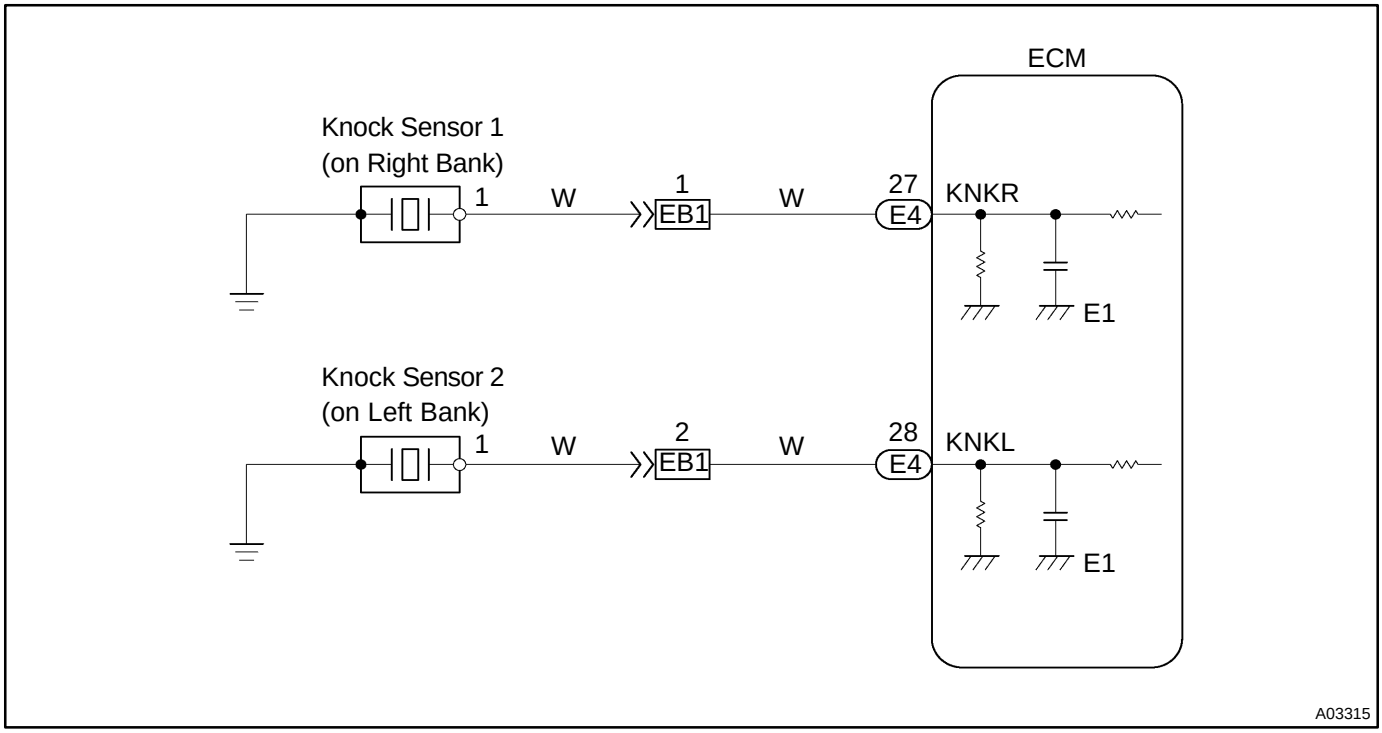

INSPECTION PROCEDURE

HINT:

- DTC P0325 is for the right bank knock sensor circuit.
- DTC P0330 is for the left bank knock sensor circuit.

- Read freeze frame data using TOYOTA hand-held tester or OBD II scan tool. Because freeze frame records the engine conditions when the malfunction is detected. When troubleshooting, it is useful for determining whether the vehicle was running or stopped, the engine was warmed up or not, the air-fuel ratio was lean or rich, etc. at the time of the malfunction.

1	**Connect OBD II scan tool or TOYOTA hand-held tester, and check knock sensor circuit.**

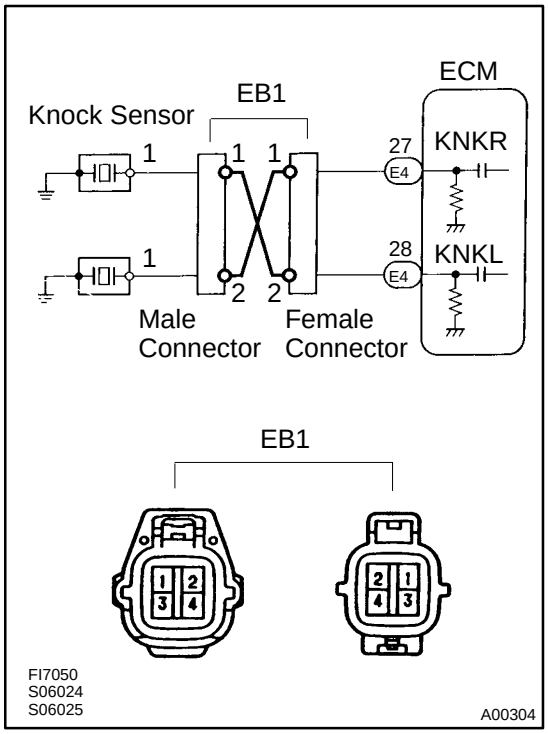

PREPARATION:

(a) Connect the OBD II scan tool or TOYOTA hand-held tester to the DLC3.

(b) Disconnect the wire from wire connector EB1.

(c) Connect the terminals of the disconnected EB1 male connector and EB1 female as follows.

Male connector ↔ Female connector
Terminal 1 ↔ Terminal 2
Terminal 2 ↔ Terminal 1

(d) Turn the ignition switch ON and push the OBD II scan tool or TOYOTA hand-held tester main switch ON.

(e) After the engine is warmed up, perform quick racing to 4,000 rpm 3 times.

CHECK:

Check the DTC.

RESULT:

Type I	DTC same as when vehicle brought in P0325 → P0325 or P0330 → P0330
Type II	DTC different to when vehicle brought in P0325 → P0330 or P0330 → P0325

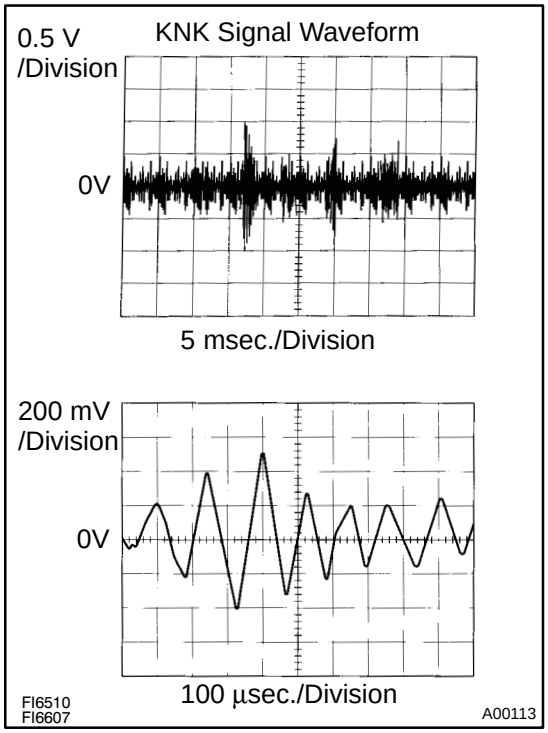

Reference: INSPECTION USING OSCILLOSCOPE

- With the engine racing (4,000 rpm), check the waveform between terminals KNKR, KNKL of the ECM connector and body ground.

HINT:

The correct waveform is as shown.

- Spread the time on the horizontal axis, and confirm that period of the wave is 141 µsec. (Normal mode vibration frequency of knock sensor: 7.1 kHz)

HINT:

If normal mode vibration frequency is not 7.1 kHz, the sensor is malfunctioning.

Type II	**Go to step 3.**

Type I

2	**Check for open and short in harness and connector between EB1 connector and ECM (See page IN-30).**

NG → **Repair or replace harness or connector.**

OK

Check and replace ECM (See page IN-30).

3	**Check for open and short in harness and connector between EB1 connector and knock sensor (See page IN-30).**

HINT:

- If DTC P0325 has changed to P0330, check the knock sensor circuit on the right bank side.
- If DTC P0330 has changed to P0325, check the knock sensor circuit on the left bank side.

NG → **Repair or replace harness or connector.**

OK

Replace knock sensor.

DI07U-09

DTC	P0335	Crankshaft Position Sensor ”A” Circuit Malfunction

CIRCUIT DESCRIPTION

Crankshaft position sensor (NE signal) consists of a magnet, iron core and pickup coil.
The NE signal plate has 34 teeth and is installed the crankshaft timing pulley. The NE signal sensor generates 34 signals at every engine revolution. The ECM detects the standard crankshaft angle based on the G (VV) signal, and the actual crankshaft angle and the engine speed by the NE signal.

DTC No.	DTC Detecting Condition	Trouble Area
P0335	No crankshaft position sensor signal to ECM during cranking (2 trip detection logic)	●Open or short in crankshaft position sensor circuit ●Crankshaft position sensor ●Crankshaft timing pulley ●ECM
	No crankshaft position sensor signal to ECM with engine speed 600 rpm or more (2 trip detection logic)	

WIRING DIAGRAM

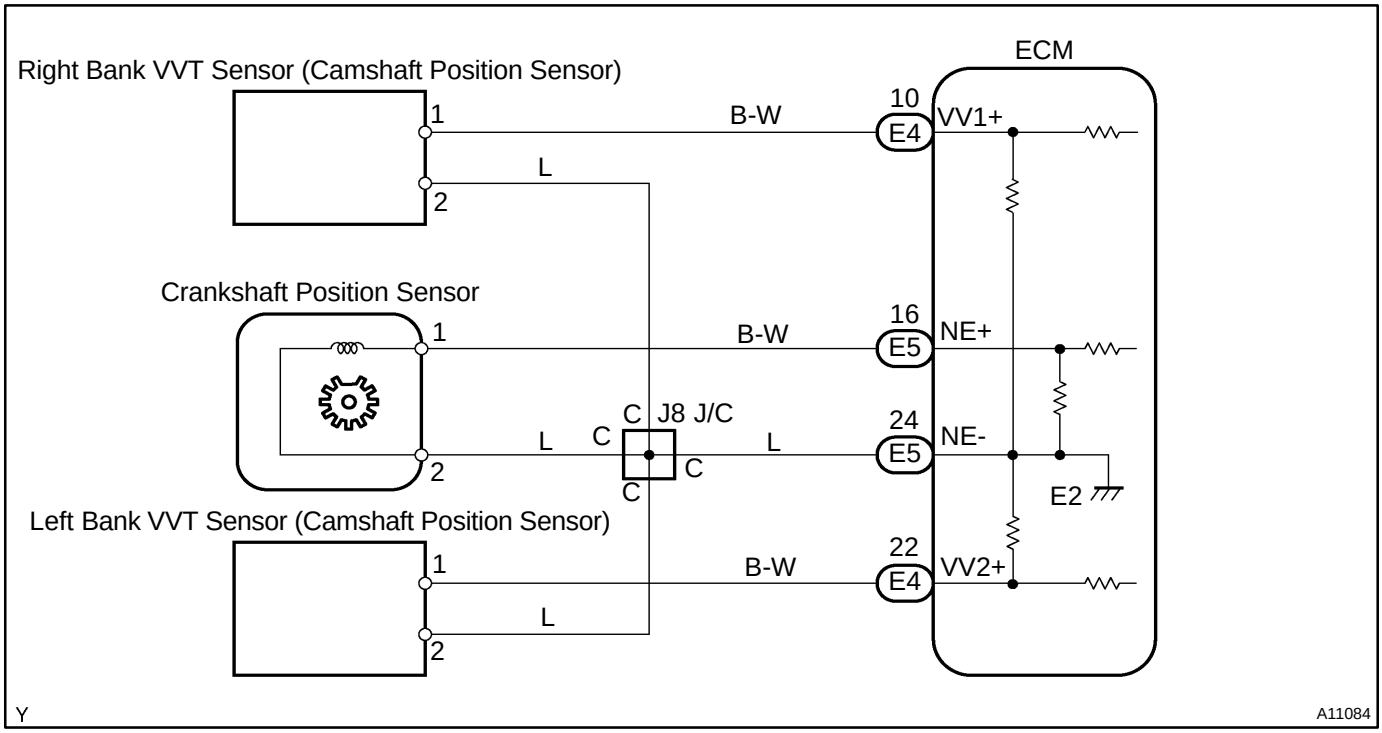

INSPECTION PROCEDURE

HINT:

- Perform troubleshooting of DTC P0335 first. If no trouble is found, troubleshoot the following mechanical systems.
- Read freeze frame data using TOYOTA hand-held tester or OBD II scan tool. Because freeze frame records the engine conditions when the malfunction is detected. When troubleshooting, it is useful for determining whether the vehicle was running or stopped, the engine was warmed up or not, the air-fuel ratio was lean or rich, etc. at the time of the malfunction.

1	**Check resistance of crankshaft position sensor (See page IG-9).**

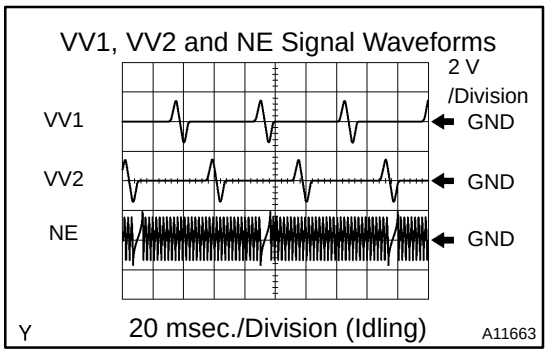

Reference: INSPECTION USING OSCILLOSCOPE

During cranking or idling, check the waveforms between terminals VV1 and NE-, VV2 and NE-, and NE and NE- of the ECM connectors.

HINT:

The correct waveforms are as shown.

NG → **Replace crankshaft position sensor.**

OK

2	**Check for open and short in harness and connector between ECM and crankshaft position sensor (See page IN-30).**

NG → **Repair or replace harness or connector.**

OK

3	**Inspect sensor installation and signal plate teeth of crankshaft timing pulley.**

NG → **Tighten sensor. Replace crankshaft timing pulley.**

OK

Check and replace ECM (See page IN-30).

DTC	P0340	Camshaft Position Sensor Circuit Malfunction

CIRCUIT DESCRIPTION

Camshaft position sensor (G (VV) signal) consists of a magnet, iron core and pickup coil.
The G (VV) signal plate has 3 teeth, on its outer circumference and is installed the camshaft timing gear. When the camshafts rotate, the protrusion on the signal plate and the air gap on the pickup coil change, causing fluctuations in the magnetic field and generating an electromotive force in the pickup coil.
The NE signal plate has 34 teeth and is installed the crankshaft timing pulley. The NE signal sensor generates 34 signals at every engine revolution. The ECM detects the standard crankshaft angle based on the G (VV) signal and the actual crankshaft angle and the engine speed by the NE signal.

DTC No.	DTC Detecting Condition	Trouble Area
P0340	No camshaft position sensor signal to ECM during cranking (2 trip detection logic)	●Open or short in camshaft position sensor circuit ●Camshaft position sensor ●Camshaft timing gear ●ECM
	No camshaft position sensor signal to ECM with engine speed 600 rpm or more	

WIRING DIAGRAM

Refer to DTC P0335 on page DI-67 .

INSPECTION PROCEDURE

HINT:
Read freeze frame data using TOYOTA hand-held tester or OBD II scan tool. Because freeze frame records the engine conditions when the malfunction is detected. When troubleshooting, it is useful for determining whether the vehicle was running or stopped, the engine was warmed up or not, the air-fuel ratio was lean or rich, etc. at the time of the malfunction.

1	**Check resistance of camshaft position sensor (See page IG-1).**

Reference: INSPECTION USING OSCILLOSCOPE
Refer to DTC P0335 on page DI-67 .

NG → **Replace camshaft position sensor.**

OK

2	**Check for open and short in harness and connector between ECM and camshaft position sensor (See page IN-30).**

NG → **Repair or replace harness or connector.**

OK

3	Inspect sensor installation and signal plate teeth of camshaft timing gear.

NG → Tighten sensor. Replace camshaft timing gear.

OK

Check and replace ECM (See page IN-30).

DTC	P0420	Catalyst System Efficiency Below Threshold (Bank 1)

CIRCUIT DESCRIPTION

The ECM observes the waveform of the heated oxygen sensor located behind the catalyst to determine whether the catalyst performance has deteriorated.
If the catalyst is functioning normally, the waveform of the heated oxygen sensor located behind the catalyst switches back and forth between rich and lean much more slowly.
When the waveform of the heated oxygen sensor located behind the catalyst alternates flutteringly between rich and lean, it indicates that catalyst performance has deteriorated.

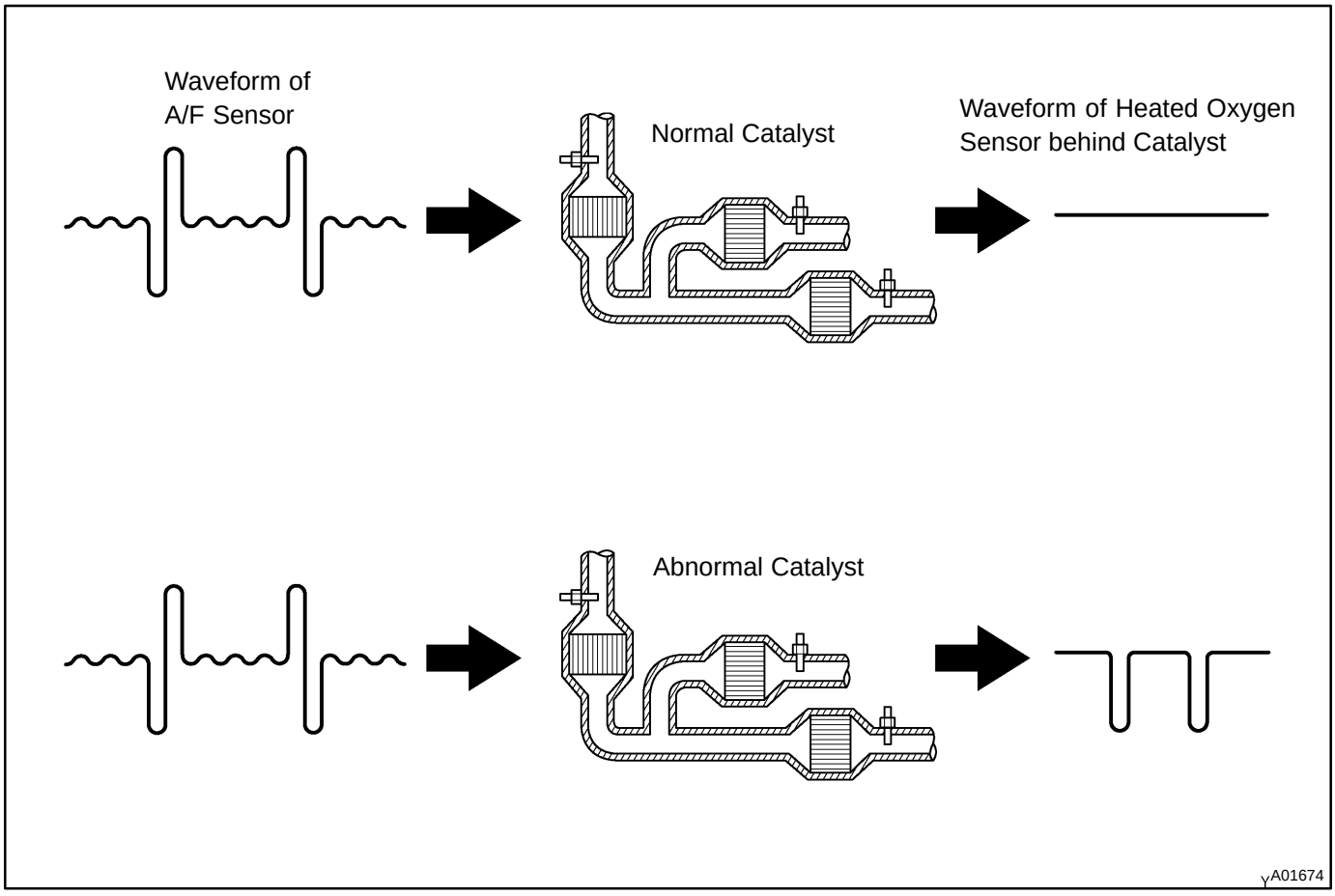

DTC No.	DTC Detecting Condition	Trouble Area
P0420	After engine and catalyst are warmed up, and while vehicle is driven within set vehicle and engine speed range, waveform of heated oxygen sensor (bank 1 sensor 2) alternates flutteringly between rich and lean (2 trip detection logic)	●Gas leakage on exhaust system ●A/F sensor (bank 1, 2 sensor 1) ●Heated oxygen sensor (bank 1 sensor 2) ●Three-way catalytic converter

CONFIRMATION ENGINE RACING PATTERN

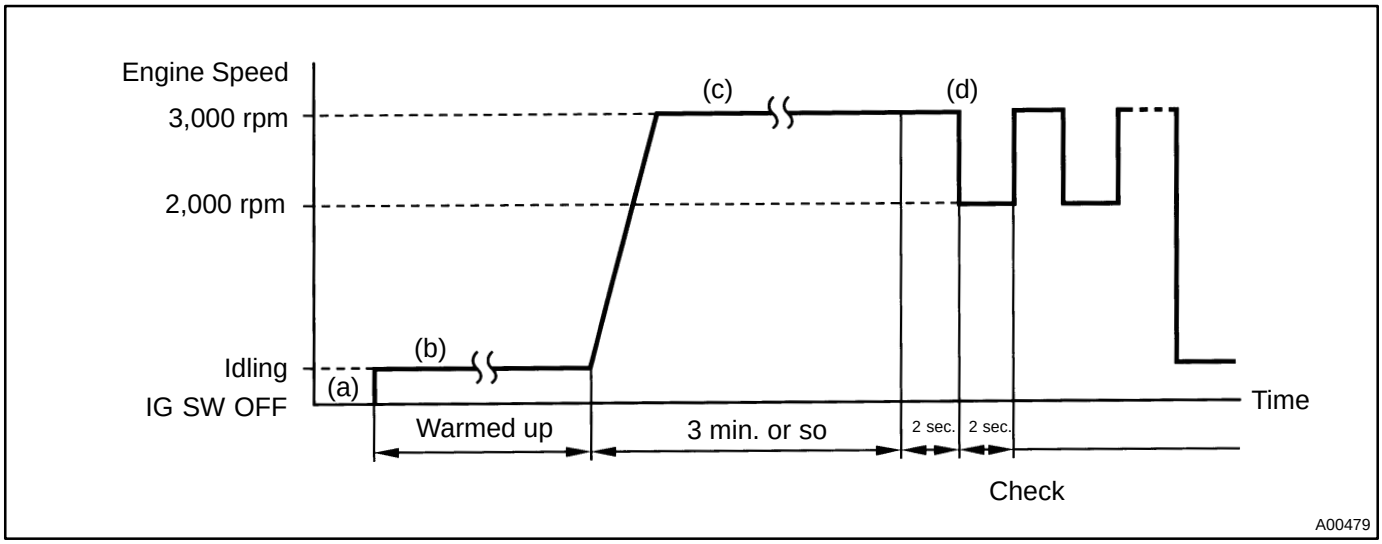

(a) Connect the OBD II scan tool or TOYOTA hand-held tester to the DLC3.
(b) Start engine and warm it up with all the accessories switched OFF until the water temperature is stable.
(c) Race the engine at 2,500 - 3,000 rpm for about 3 min.
(d) When racing the engine at 3,000 rpm for 2 sec. and 2,000 rpm for 2 sec. alternately, check the wave-form of the heated oxygen sensor (bank 1 sensor 2).

INSPECTION PROCEDURE

HINT:
Read freeze frame data using TOYOTA hand-held tester or OBD II scan tool. Because freeze frame records the engine conditions when the malfunction is detected. When troubleshooting, it is useful for determining whether the vehicle was running or stopped, the engine was warmed up or not, the air-fuel ratio was lean or rich, etc. at the time of the malfunction.

1	**Are there any other codes (besides DTC P0420) being output?**

YES → **Go to relevant DTC chart (See page DI-14).**

NO

2	**Check gas leakage on exhaust system.**

NG → **Repair or replace.**

OK

3	Check A/F sensor (bank 1, 2 sensor 1) (See page SF-79).

NG → Repair or replace.

OK

4	Check heated oxygen sensor (bank 1 sensor 2) (See page SF-81).

NG → Repair or replace.

OK

Replace three-way catalytic converter (See page EC-15).

DI6T6-01

DTC	P0440	Evaporative Emission Control System Malfunction

DTC	P0442	Evaporative Emission Control System Leak Detected (Small Leak)

CIRCUIT DESCRIPTION

The vapor pressure sensor, VSV for canister closed valve (CCV) and VSV for pressure switching valve are used to detect abnormalities in the evaporative emission control system.
The ECM decides whether there is an abnormality in the evaporative emission control system based on the vapor pressure sensor signal.
DTC P0440 or P0442 is recorded by the ECM when evaporative emissions leak from the components within the dotted line in Fig. 1 below, or when the vapor pressure sensor malfunctions.

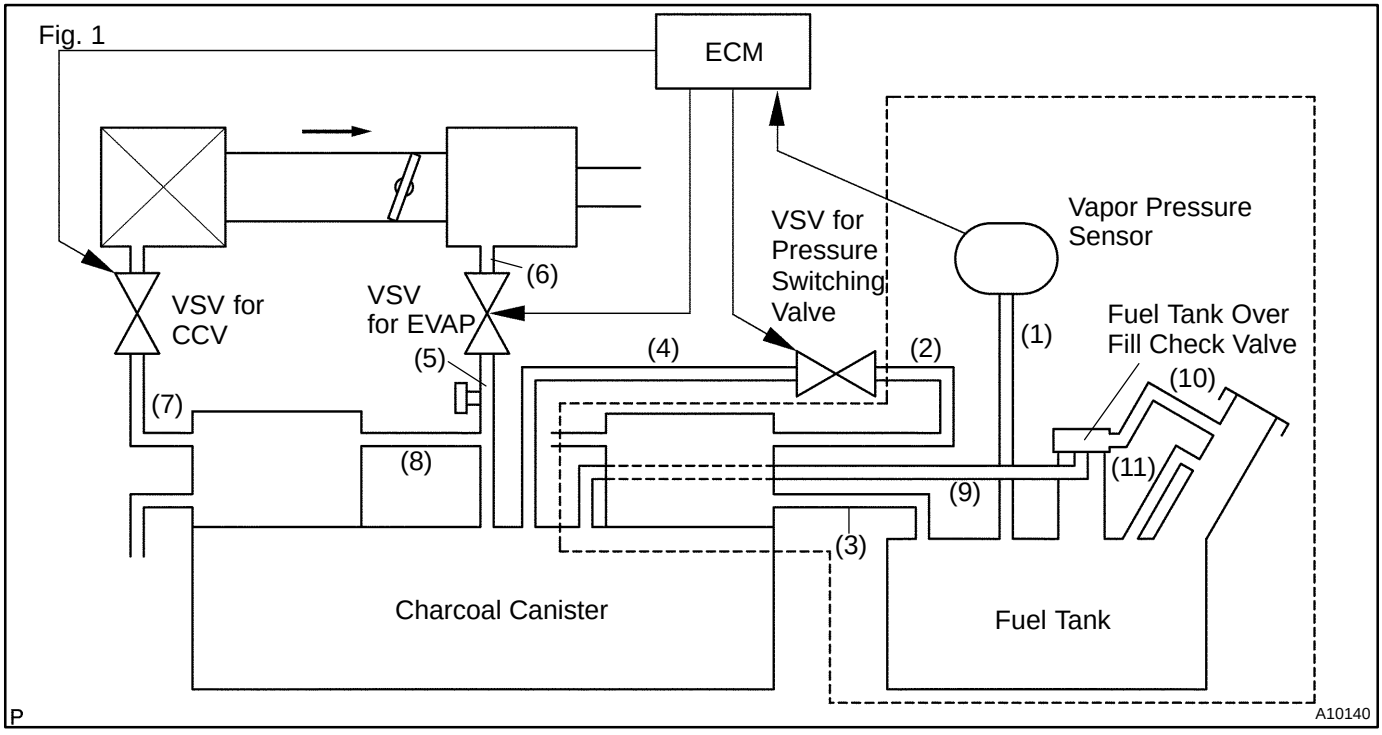

DTC No.	DTC Detecting Condition	Trouble Area
P0440 P0442	After cold starting and when generating certain swift pressure value in fuel tank enabling not to hold that value (2 trip detection logic)	●Hose or tube cracked, hole, damaged or loose seal ((3) in Fig. 1) ●Fuel tank cap incorrectly installed ●Fuel tank cap cracked or damaged ●Vacuum hose cracked, holed, blocked, damaged or disconnected ((1) or (2) in Fig. 1) ●Fuel tank cracked, holed or damaged ●Charcoal canister cracked, holed or damaged ●Open or short in vapor pressure sensor circuit ●Vapor pressure sensor ●Fuel tank over fill check valve cracked or damaged ●ECM

WIRING DIAGRAM

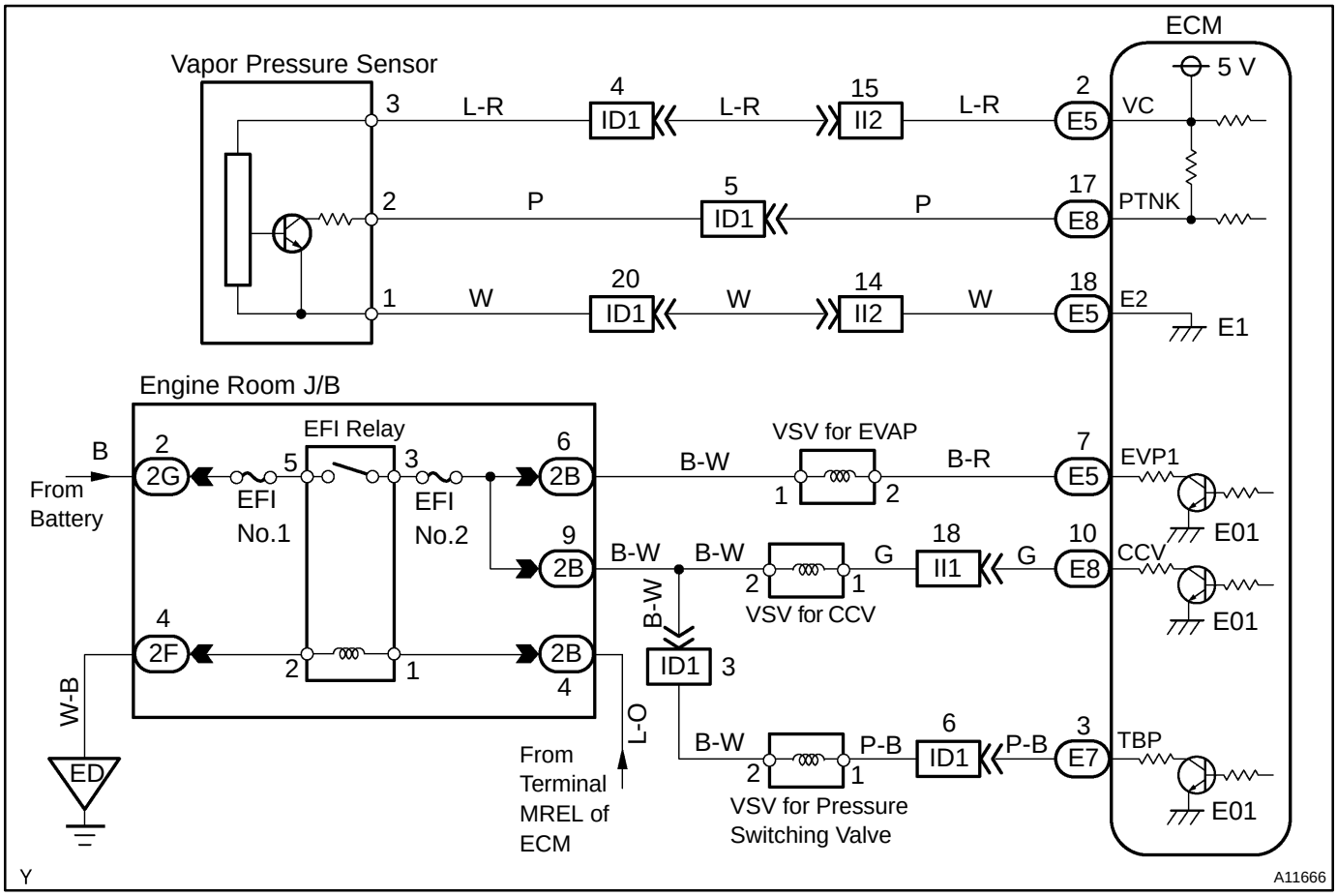

INSPECTION PROCEDURE

HINT:

- If DTC P0441, P0446, P0450 or P0451 is output after DTC P0440 or P0442, first troubleshoot DTC P0441, P0446, P0450 or P0451. If no malfunction is detected, troubleshoot DTC P0440 or P0442 next.
- Ask the customer whether, after the MIL came on, the customer found the fuel tank cap loose and tightened it. Also ask the customer whether the fuel tank cap was loose when refuelling. If the fuel tank cap was loose, it was the cause of the DTC. If the fuel tank cap was not loose or if the customer was not sure if it was loose, troubleshoot according to the following procedure.
- Read freeze frame data using TOYOTA hand-held tester or OBD II scan tool. Because freeze frame records the engine conditions when the malfunction is detected. When troubleshooting, it is useful for determining whether the vehicle was running or stopped, the engine was warmed up or not, the air-fuel ratio was lean or rich, etc. at the time of the malfunction.
- When the ENGINE RUN TIME in the freeze frame data is less than 200 seconds, carefully check the vapor pressure sensor.

1	**Check whether hose close to fuel tank have been modified, and check whether there are signs of any accident near fuel tank or charcoal canister.**

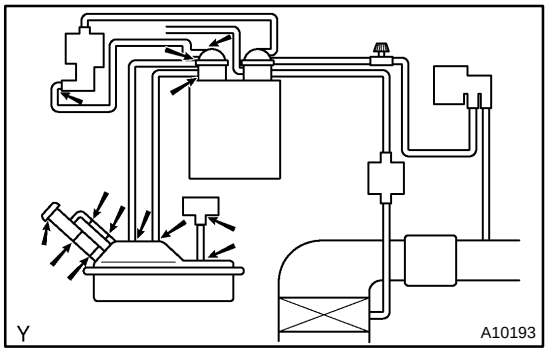

CHECK:

Check for cracks, deformation and loose connection of the following parts:

- Fuel tank
- Charcoal canister
- Fuel tank filler pipe
- Hoses and tubes around fuel tank and charcoal canister

NG → **Repair or replace.**

OK

2	**Check that fuel tank cap is TOYOTA genuine parts.**

NG → **Replace to TOYOTA genuine parts.**

OK

3	**Check that fuel tank cap is correctly installed.**

NG → **Correctly install fuel tank cap.**

OK

4	**Check fuel tank cap (See page EC-6).**

NG → **Replace fuel tank cap.**

OK

5	**Check filler neck for damage.**

PREPARATION:
Remove the fuel tank cap.
CHECK:
Visually inspect the filler neck for damage.

NG → **Replace filler pipe.**

OK

6	**Check vacuum hoses between vapor pressure sensor and fuel tank, charcoal canister and VSV for pressure switching valve, and VSV for pressure switching valve and charcoal canister.**

CHECK:
(a) Check that the vacuum hose is connected correctly.
(b) Check the vacuum hose for looseness and disconnection.
(c) Check the vacuum hose for cracks, hole and damage.

NG → **Repair or replace.**

OK

7	**Check hose and tube between fuel tank and charcoal canister.**

CHECK:
(a) Check for proper connection of the fuel tank and fuel evap pipe (See page EC-6), fuel evap pipe and fuel tube under the floor, fuel tube under the floor and charcoal canister.
(b) Check the hose and tube for cracks, hole and damage.

NG → **Repair or replace.**

OK

8	**Check charcoal canister for cracks, hole and damage (See page EC-6).**

NG → **Replace charcoal canister.**

OK

9	Check voltage between terminals VC and E2 of ECM connector.

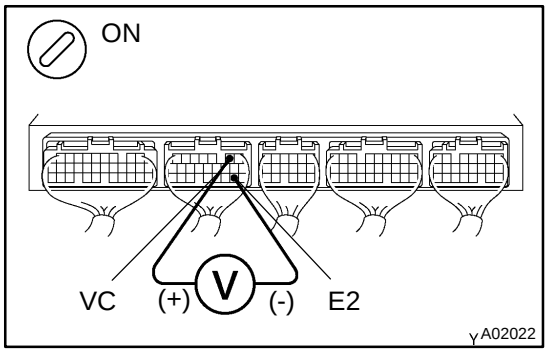

CHECK:

(a) Remove the grove compartment (See page SF-82).

(b) Turn the ignition switch ON.

CHECK:

Measure the voltage between terminals VC and E2 of the ECM connector.

OK:

Voltage: 4.5 - 5.5 V

NG	Check and replace ECM (See page IN-30).

OK

10	Check voltage between terminals PTNK and E2 of ECM connectors.

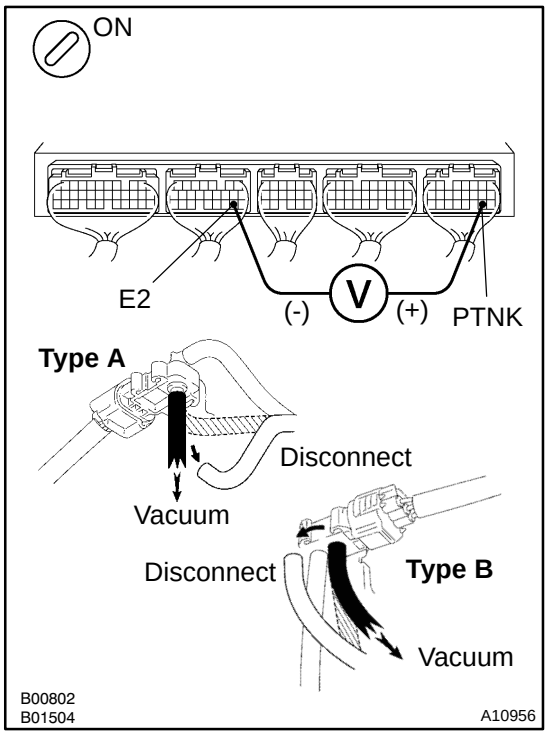

PREPARATION:

(a) Remove the grove compartment (See page SF-82).

(b) Turn the ignition switch ON.

CHECK:

Measure the voltage between terminals PTNK and E2 of the ECM connectors.

(1) Disconnect the vacuum hose from the vapor pressure sensor.

(2) Using the MITYVAC (Hand-Held Vacuum Pump), apply a vacuum of 4.0 kPa (30 mmHg, 1.18 in.Hg) to the vapor pressure sensor.

NOTICE:

The vacuum applied to the vapor pressure sensor must be less than 66.7 kPa (500 mmHg, 19.7 in.Hg).

OK:

(1) Voltage: 2.9 - 3.7 V

(2) Voltage: 0.5 V or less

OK	Go to step 12.

NG

11	**Check for open and short in harness and connector between vapor pressure sensor and ECM (See page IN-30).**

NG → **Repair or replace harness or connector.**

OK ↓

Replace vapor pressure sensor.

12	**Check fuel tank and fuel tank over fill check valve for cracks and damage.**

NG → **Replace fuel tank or fuel tank over fill check valve.**

OK ↓

It is likely that vehicle user did not properly close fuel tank cap. Please explain to customer how to properly install fuel tank cap.

DTC	P0441	Evaporative Emission Control System Incorrect Purge Flow

DTC	P0446	Evaporative Emission Control System Vent Control Malfunction

CIRCUIT DESCRIPTION

The vapor pressure sensor, VSV for canister closed valve (CCV), VSV for pressure switching valve are used to detect abnormalities in the evaporative emission control system.

The ECM decides whether there is an abnormality in the evaporative emission control system based on the vapor pressure sensor signal.

DTCs P0441 and P0446 are recorded by the ECM when evaporative emissions leak from the components within the dotted line in Fig. 1 below, or when there is a malfunction in either the VSV for EVAP, the VSV for pressure switching valve, or in the vapor pressure sensor itself.

Fig. 1

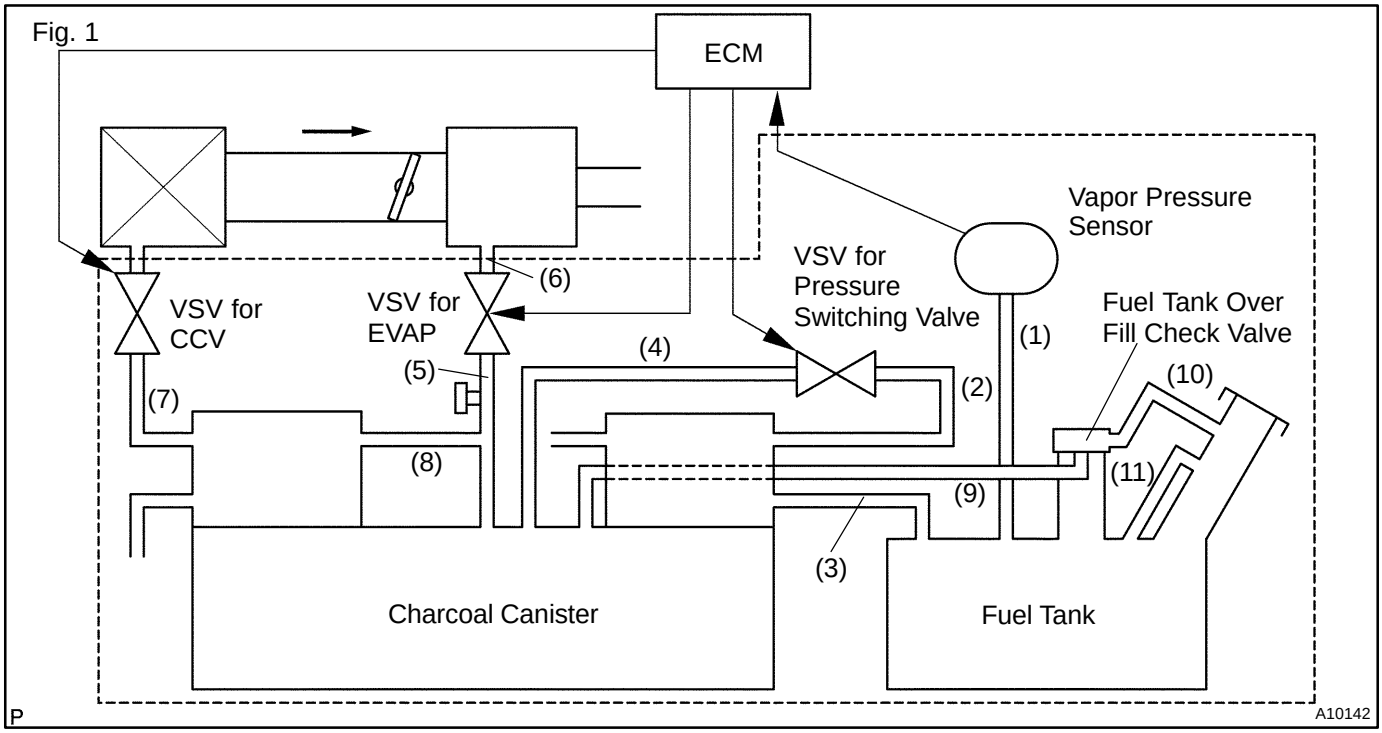

DTC No.	DTC Detecting Condition	Trouble Area
P0441	Pressure in charcoal canister and fuel tank does not drop during purge control (2 trip detection logic)	●Vacuum hose cracks, holed blocked, damaged or disconnected ((1), (2), (3), (4), (5), (6), (7), (8), (9), (10) and (11) in Fig. 1) ●Fuel tank cap incorrectly installed ●Fuel tank cap cracked or damaged ●Open or short in vapor pressure sensor circuit ●Vapor pressure sensor ●Open or short in VSV circuit for EVAP ●VSV for EVAP ●Open or short in VSV circuit for CCV ●VSV for CCV ●Open or short in VSV circuit for pressure switching valve ●VSV for pressure switching valve ●Fuel tank cracked, holed or damaged ●Charcoal canister cracked, holed or damaged ●Fuel tank over fill check valve cracked damaged ●ECM
	During purge cut-off, negative pressure incomming in the charcoal canister and fuel tank will not stop. (2 trip detection logic)	
P0446	When VSV for pressure switching valve is ON, ECM judges that there is no continuity between vapor pressure sensor, fuel tank and charcoal canister (2 trip detection logic)	
	When VSV for pressure switching valve is turned OFF, pressure in fuel tank is maintained at atmospheric pressure (2 trip detection logic)	
	When VSV for CCV is ON, pressure in charcoal canister and fuel tank is maintained at atmospheric pressure (2 trip detection logic)	

WIRING DIAGRAM

Refer to DTC P0440 or P0442 on page DI-74 .

INSPECTION PROCEDURE

HINT:

- If DTC P0441, P0446, P0450 or P0451 is output after DTC P0440 or P0442,first troubleshoot DTC P0441, P0446, P0450 or P0451. If no malfunction is detected, troubleshoot DTC P0440 or P0442 next.
- Read freeze frame data using TOYOTA hand-held tester or OBD II scan tool. Because freeze frame records the engine conditions when the malfunction is detected. When troubleshooting, it is useful for determining whether the vehicle was running or stopped, the engine was warmed up or not, the air-fuel ratio was lean or rich, etc. at the time of the malfunction.
- When the ENGINE RUN TIME in the freeze frame data is less than 200 seconds, carefully check the vapor pressure sensor.

TOYOTA hand-held tester:

1	**Check whether hose close to fuel tank have been modified, and check whether there are signs of any accident near fuel tank or charcoal canister (See page DI-74 , step 1).**

NG → **Repair or replace.**

OK

2	**Check that fuel tank cap is TOYOTA genuine parts (See page DI-74 , step 2).**

NG → **Replace to TOYOTA genuine parts.**

OK

3	Check that fuel tank cap is correctly installed (See page DI-74 , step 3).

NG → Correctly install fuel tank cap.

OK

4	Check fuel tank cap (See page EC-6 , step 4).

NG → Replace fuel tank cap.

OK

5	Check filler neck for damage (See page DI-74 , step 5).

NG → Replace filler pipe.

OK

6	Check vacuum hoses between vapor pressure sensor and fuel tank, charcoal canister and VSV for pressure switching valve, and VSV for pressure switching valve and charcoal canister (See page DI-74 , step 6).

NG → Repair or connect VSV or sensor connector.

OK

7	Check hose and tube between fuel tank and charcoal canister (See page DI-74 , step 7).

NG → Repair or replace.

OK

8	**Check VSV connector for EVAP, VSV connector for CCV, VSV connector for pressure switching valve and vapor pressure sensor connector for looseness and disconnection.**

NG → Repair or connect VSV or sensor connector.

OK

9	**Check vacuum hoses ((8), (9), (10) and (11) in Fig. 1 in circuit description).**

CHECK:

(a) Check that the vacuum hose is connected correctly.
(b) Check the vacuum hose for looseness and disconnection.
(c) Check the vacuum hose for cracks, hole, damage and blockage.

NG → Repair or replace.

OK

10	**Check voltage between terminals VC and E2 of ECM connector (See page DI-74 , step 9).**

NG → Check and replace ECM (See page IN-30).

OK

11	**Check voltage between terminals PTNK and E2 of ECM connectors (See page DI-74 , step 10).**

OK → Go to step 13.

NG

12	**Check for open and short in harness and connector between vapor pressure sensor and ECM (See page IN-30).**

NG → **Repair or replace harness or connector.**

OK

Replace vapor pressure sensor.

13	**Check purge flow.**

VSV is ON

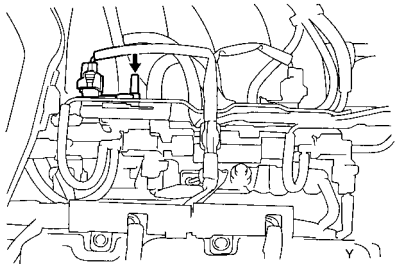

VSV is OFF

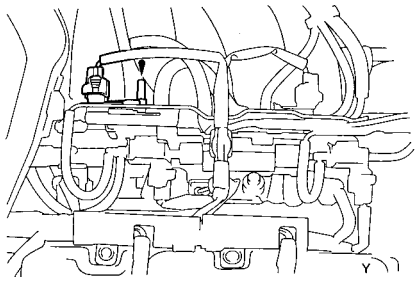

A00230

PREPARATION:

(a) Connect the TOYOTA hand-held tester to the DLC3.
(b) Select the ACTIVE TEST mode on the TOYOTA hand-held tester.
(c) Disconnect the vacuum hose for the VSV for the EVAP from the charcoal canister.
(d) Start the engine.

CHECK:

When the VSV for the EVAP is operated by the TOYOTA hand-held tester, check whether the disconnected hose applies suction to your finger.

OK:

VSV is ON:
Disconnected hose applies suction to your finger.
VSV is OFF:
Disconnected hose applies no suction to your finger.

OK → **Go to step 17.**

NG

14	**Check vacuum hose between intake manifold and VSV for EVAP, and VSV for EVAP and charcoal canister.**

CHECK:

(a) Check that the vacuum hose is connected correctly.

(b) Check the vacuum hose for looseness and disconnection.
(c) Check the vacuum hose for cracks, hole, damage and blockage.

NG → **Repair or replace.**

OK

15	**Check operation of VSV for EVAP (See page SF-65).**

OK → **Go to step 16.**

NG

Replace VSV and charcoal canister, and then clean vacuum hoses between throttle body and VSV for EVAP, and VSV for EVAP and charcoal canister.

16	**Check for open and short in harness and connector between EFI main relay (Marking: EFI) and VSV for EVAP, and VSV for EVAP and ECM (See page IN-30).**

NG → **Repair or replace harness or connector.**

OK

Check and replace ECM (See page IN-30).

17	**Check VSV for CCV.**

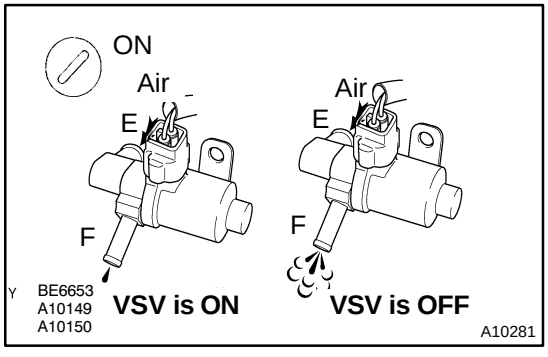

PREPARATION:

(a) Connect the TOYOTA hand-held tester to the DLC3.
(b) Disconnect the vacuum hose for the VSV for the CCV from the charcoal canister.
(c) Turn the ignition switch ON and push the TOYOTA hand-held tester main switch ON.
(d) Select the ACTIVE TEST mode on the TOYOTA hand-held tester.

CHECK:

Check the VSV operation when it is operated by the TOYOTA hand-held tester.

OK:

VSV is ON:
Air does not flow from port E to port F.
VSV is OFF:
Air from port E flows out through port F.

OK	**Go to step 21.**

NG

18	**Check vacuum hose between VSV for CCV and charcoal canister.**

CHECK:

(a) Check that the vacuum hose is connected correctly.
(b) Check the vacuum hose for looseness and disconnection.
(c) Check the vacuum hose for cracks, hole damage, and blockage.

NG	**Repair or replace.**

OK

19	**Check operation of VSV for CCV (See page SF-70).**

OK	**Go to step 20.**

NG

Replace VSV and charcoal canister, and then clean vacuum hose between charcoal canister and VSV for CCV.

20	**Check for open and short in harness and connector between EFI main relay (Marking: EFI) and VSV for CCV, and VSV for CCV and ECM (See page IN-30).**

NG	**Repair or replace harness or connector.**

OK

Check and replace ECM (See page IN-30).

21	Check VSV for pressure switching valve.

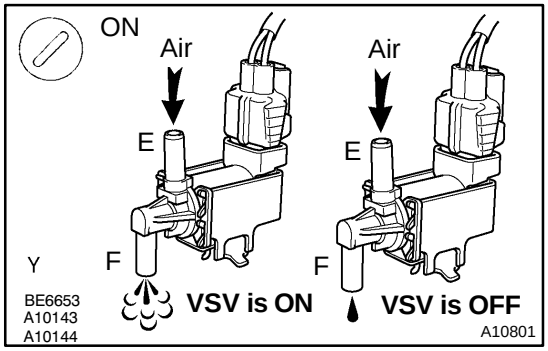

PREPARATION:

(a) Connect the TOYOTA hand-held tester to the DLC3.
(b) Turn the ignition switch ON and push the TOYOTA hand-held tester main switch ON.
(c) Select the ACTIVE TEST mode on the TOYOTA hand-held tester.

CHECK:

Check the VSV operation when it is operated by the TOYOTA hand-held tester.

OK:

VSV is ON:
Air from port E flows out through port F.
VSV is OFF:
Air does not flow from port E to port F.

OK	Go to step 24.

NG

22	Check operation of VSV for pressure switching valve (See page SF-72).

OK	Go to step 23.

NG

Replace VSV and charcoal canister, and then clean vacuum hoses between charcoal canister and VSV for pressure switching valve, and VSV for pressure switching valve and fuel tank.

23	Check for open and short in harness and connector between EFI main relay (Marking: EFI) and VSV for pressure switching valve, and VSV for pressure switching valve and ECM (See page IN-30).

NG	**Repair or replace harness or connector.**

OK

Check and replace ECM (See page IN-30).

24	**Check fuel tank.**

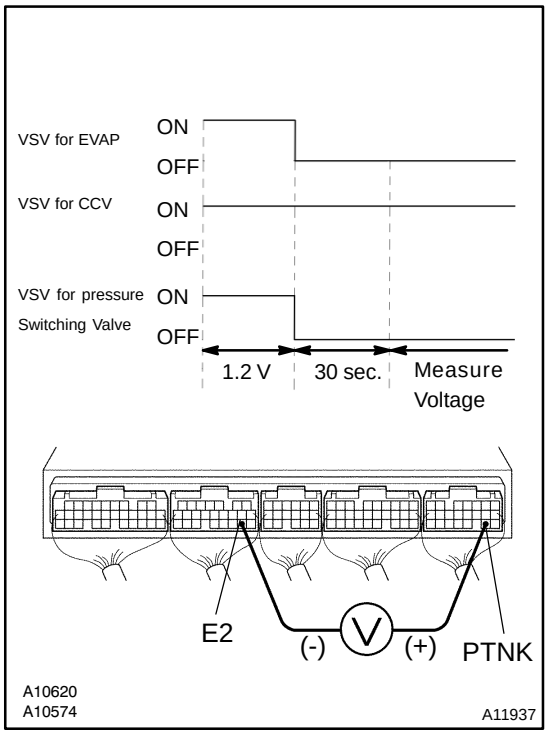

PREPARATION:

(a) Remove the grove compartment (See page SF-82).
(b) Connect the TOYOTA hand-held tester to the DLC3.
(c) Select the ACTIVE TEST mode on the TOYOTA hand-held tester.
(d) Start the engine.
(e) The VSV for the CCV is ON by the TOYOTA hand-held tester.
(f) The VSV for the EVAP and the VSV for the pressure switching valve are ON by the TOYOTA hand-held tester and hold the VSV for the EVAP until voltage between terminals PTNK and E2 becomes 1.2 V.

CHECK:

Measure the voltage between terminals PTNK and E2 of the ECM connectors 30 sec. after switching the VSV for the EVAP and the VSV for the pressure switching valve from ON to OFF.

OK:

Voltage:

When there is no sharp change of the voltage with the voltage of more or less 1.2 V

NG	**Replace fuel tank.**

OK

25	Check charcoal canister.

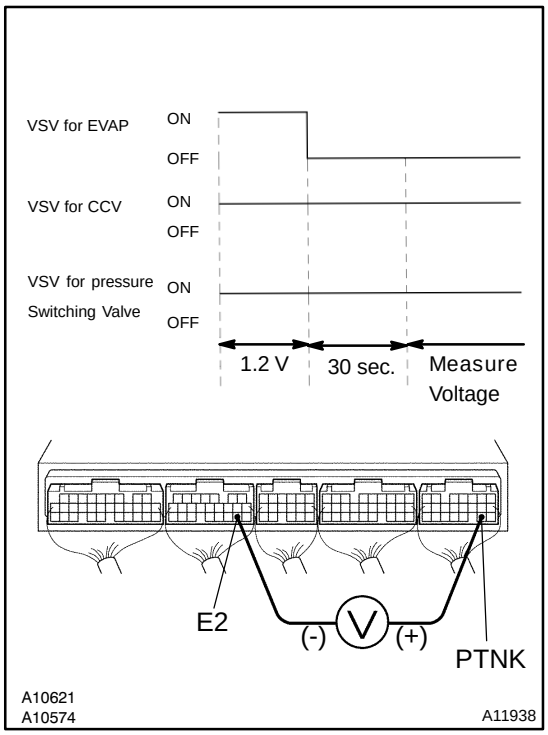

PREPARATION:

(a) Remove the grove compartment (See page SF-82).
(b) Connect the TOYOTA hand-held tester to the DLC3.
(c) Select the ACTIVE TEST mode on the TOYOTA hand-held tester.
(d) Start the engine.
(e) The VSV for the CCV and the VSV for the pressure switching valve are ON by the TOYOTA hand-held tester.
(f) The VSV for the EVAP is ON by the TOYOTA hand-held tester and hold the VSV for the EVAP until voltage between terminals PTNK and E2 becomes 1.2 V.

CHECK:

Measure the voltage between terminals PTNK and E2 of the ECM connectors 30 sec. after switching the VSV for the EVAP from ON to OFF.

OK:

Voltage:
When there is no sharp change of the voltage with the voltage of more or less 1.2 V

NG → **Replace charcoal canister.**

OK

26	Remove charcoal canister and check it (See page EC-6).

NG → **Replace charcoal canister.**

OK

27	Check fuel tank over fill check valve (See page EC-6).

NG → **Replace fuel tank over fill check valve or fuel tank.**

OK

Check and replace charcoal canister (See page IN-30).

OBD II scan tool (excluding TOYOTA hand-held tester):

1	Check whether hose close to fuel tank have been modified, and check whether there are signs of any accident near fuel tank or charcoal canister (See page DI-74 , step 1).

NG → Repair or replace.

OK

2	Check that fuel tank cap is TOYOTA genuine parts (See page DI-74 , step 2).

NG → Replace to TOYOTA genuine parts.

OK

3	Check that fuel tank cap is correctly installed (See page DI-74 , step 3).

NG → Correctly install fuel tank cap.

OK

4	Check fuel tank cap (See page EC-6 , step 4).

NG → Replace fuel tank cap.

OK

5	Check filler neck for damage (See page DI-74 , step 5).

NG → Replace filler pipe.

OK

6	Check vacuum hoses between vapor pressure sensor and fuel tank, charcoal canister and VSV for pressure switching valve, and VSV for pressure switching valve and charcoal canister (See page DI-74 , step 6).

NG → Repair or connect VSV or sensor connector.

OK

7	Check hose and tube between fuel tank and charcoal canister (See page DI-74 , step 7).

NG → Repair or replace.

OK

8	Check VSV connector for EVAP, VSV connector for CCV, VSV connector for pressure switching valve and vapor pressure sensor connector for looseness and disconnection.

NG → Repair or connect VSV or sensor connector.

OK

9	Check vacuum hoses ((8), (9), (10) and (11) in Fig. 1 in circuit description).

CHECK:

(a) Check that the vacuum hose is connected correctly.
(b) Check the vacuum hose for looseness and disconnection.
(c) Check the vacuum hose for cracks, hole damage, and blockage.

NG → Repair or replace.

OK

10	Check voltage between terminals VC and E2 of ECM connector (See page DI-74 , step 9).

NG → Check and replace ECM (See page IN-30).

OK

11	Check voltage between terminals PTNK and E2 of ECM connectors (See page DI-74 , step 10).

OK → Go to step 13.

NG

12	Check for open and short in harness and connector between vapor pressure sensor and ECM (See page IN-30).

NG → Repair or replace harness or connector.

OK

Replace vapor pressure sensor.

13	Check VSV for EVAP.

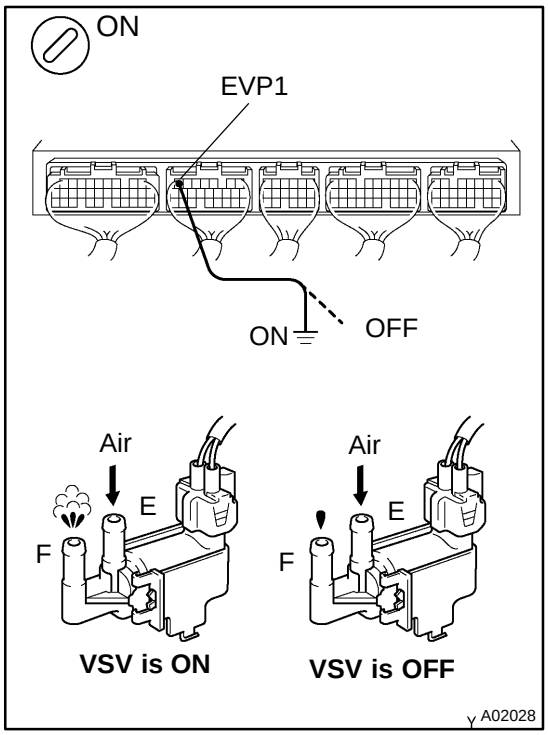

PREPARATION:

(a) Remove the glove compartment (See page SF-82).

(b) Turn the ignition switch ON.

CHECK:

Check the VSV function.

(1) Connect between terminal EVP1 of the ECM connector and body ground (ON).

(2) Disconnect between terminal EVP1 of the ECM connector and body ground (OFF).

OK:

(1) VSV is ON:
Air from port E flows out through port F.
(2) VSV is OFF:
Air does not flow from port E to port F.

OK	Go to step 16.

NG

14	Check operation of VSV for EVAP (See page SF-65).

OK	Go to step 15.

NG

Replace VSV and clean vacuum hoses between throttle body and VSV for EVAP, and VSV for EVAP and charcoal canister, and then check charcoal canister.

15	Check for open and short in harness and connector between EFI main relay (Marking: EFI) and VSV for EVAP, and VSV for EVAP and ECM (See page IN-30).

NG	Repair or replace harness or connector.

OK

Check and replace ECM (See page IN-30).

16	Check VSV for CCV.

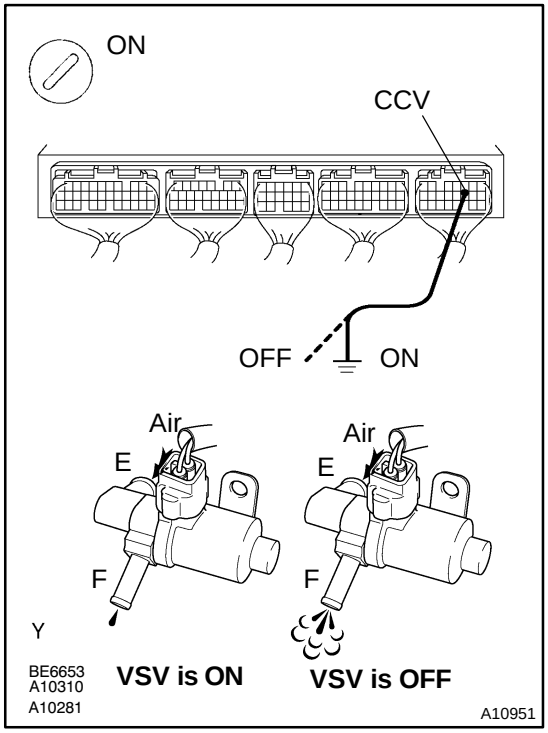

PREPARATION:

(a) Remove the grove compartment (See page SF-82).

(b) Turn the ignition switch ON.

CHECK:

Check the VSV function.

(1) Connect between terminal CCV of the ECM connector and body ground (ON).

(2) Disconnect between terminal CCV of the ECM connector and body ground (OFF).

OK:

VSV is ON:
Air does not flow from port E to port F.
VSV is OFF:
Air from port E flows out through port F.

OK → **Go to step 19.**

NG

17	Check operation of VSV for CCV (See page SF-70).

OK → **Go to step 18.**

NG

Replace VSV and charcoal canister, and then clean vacuum hose between charcoal canister and VSV for CCV.

18	**Check for open and short in harness and connector between EFI main relay (Marking: EFI) and VSV for CCV, and VSV for CCV and ECM (See page IN-30).**

NG → **Repair or replace harness or connector.**

OK

Check and replace ECM (See page IN-30).

19	**Check VSV for pressure switching valve.**

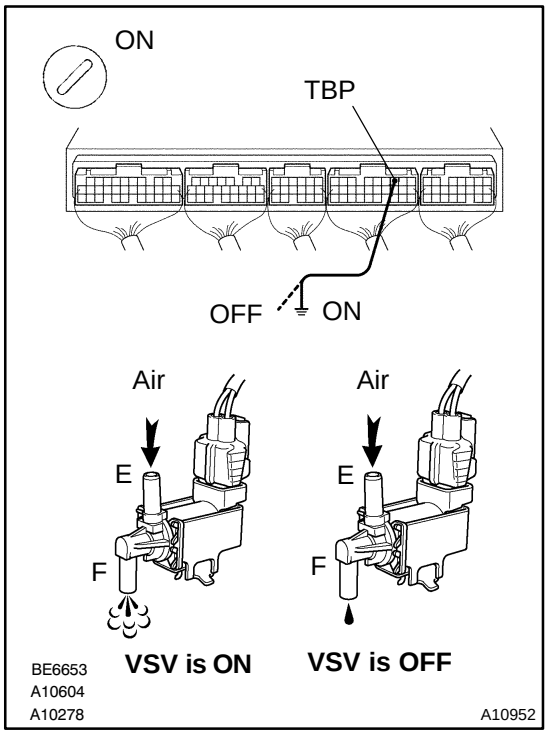

PREPARATION:

(a) Remove the grove compartment (See page SF-82).

(b) Turn the ignition switch ON.

CHECK:

Check the VSV function.

(1) Connect between terminal TBP of the ECM connector and body ground (ON).

(2) Disconnect between terminal TBP of the ECM connector and body ground (OFF).

OK:

(1) VSV is ON:
Air from port E flows out through port F.
(2) VSV is OFF:
Air does not from flow port E to port F.

OK → **Go to step 22.**

NG

20	**Check operation of VSV for pressure switching valve (See page SF-72).**

OK → **Go to step 21.**

NG

Replace VSV and charcoal canister, and then clean vacuum hoses between charcoal canister and VSV for pressure switching valve, and VSV for pressure switching valve and fuel tank.

21	Check for open and short in harness and connector between EFI main relay (Marking: EFI) and VSV for pressure switching valve, and VSV for pressure switching valve and ECM (See page IN-30).

NG → Repair or replace harness or connector.

OK

Check and replace ECM (See page IN-30).

22	Check the fuel tank over fill check valve (See page EC-6).

NG → Replace fuel tank over fill check valve or fuel tank.

OK

Check and replace charcoal canister (See page IN-30).

DTC	P0450	Evaporative Emission Control System Pressure Sensor Malfunction

DTC	P0451	Evaporative Emission Control System Pressure Sensor Range/Performance

CIRCUIT DESCRIPTION

The vapor pressure sensor, VSV for canister closed valve (CCV) and VSV for pressure switching valve are used to detect abnormalities in the evaporative emission control system.
The ECM decides whether there is an abnormality in the evaporative emission control system based on the vapor pressure sensor signal.
DTC P0450 or P0451 is recorded by the ECM when the vapor pressure sensor malfunction.

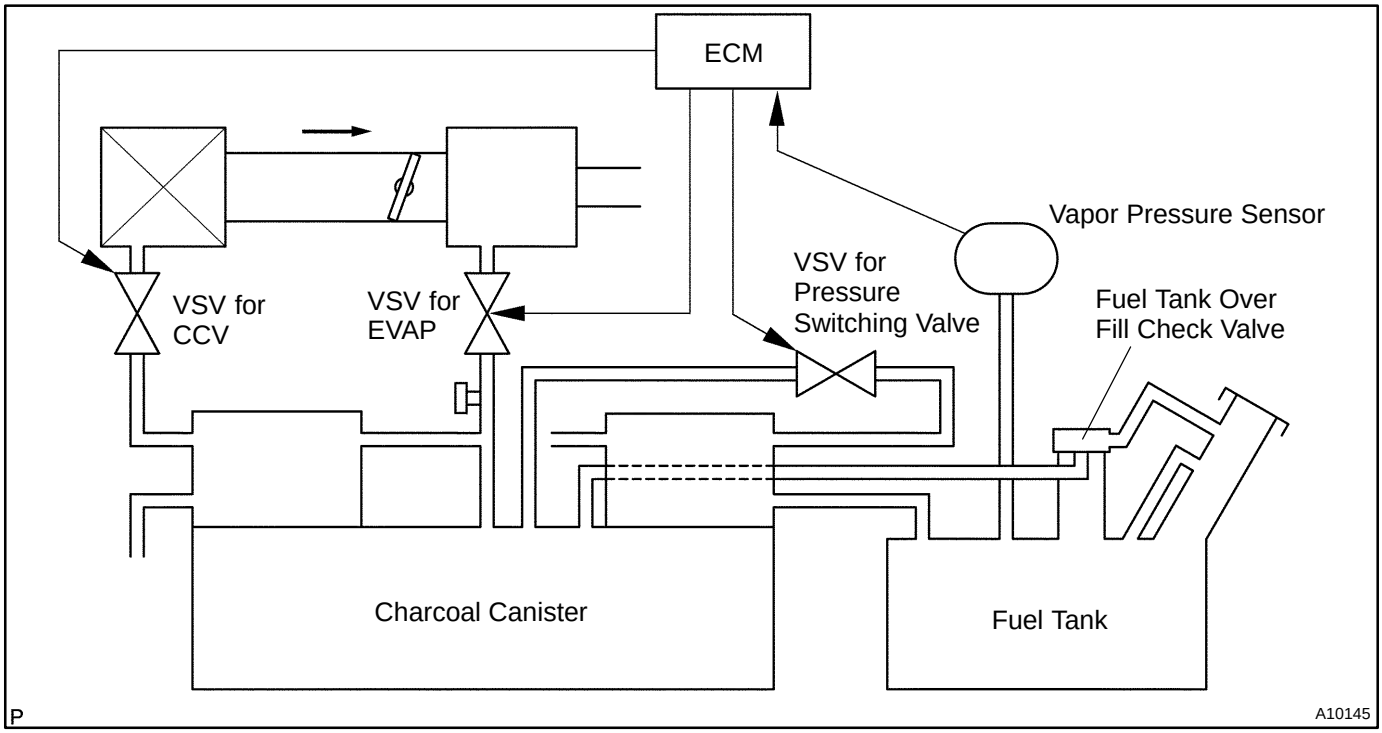

DTC No.	DTC Detecting Condition	Trouble Area
P0450	10 seconds or less after engine starting condition vapor pressure sensor fixed value continues for fixed value or more: (2 trip detection logic)	●Open or short in vapor pressure sensor circuit ●Vapor pressure sensor ●ECM
P0451	Vapor pressure sensor output extremely changes under conditions of (a) and (b): (2 trip detection logic) (a) Vehicle speed: 0 km/h (0mph), Engine speed: Idling and VSV for pressure switching valve is OFF (b) vavor pressure sensor value ≦ opening pressure valve of charcoal canister	

WIRING DIAGRAM

Refer to DTC P0440 or P0442 on page DI-74 .

INSPECTION PROCEDURE

HINT:

- If DTC P0441, P0446, P0450 or P0451 is output after DTC P0440 or P0442, first trouble shoot DTC P0441, P0446 P0450 or P0451. If no malfunction is detected, troubleshoot DTC P0440 or P0442 next.
- Read freeze frame data using TOYOTA hand-held tester or OBD II scan tool. Because freeze frame records the engine conditions when the malfunction is detected. When troubleshooting, it is useful for determining whether the vehicle was running or stopped, the engine was warmed up or not, the air-fuel ratio was lean or rich, etc. at the time of the malfunction.
- When the ENGINE RUN TIME in the freeze frame data is less than 200 seconds, carefully check the VSV for EVAP, charcoal canister and vapor pressure sensor.

1	**Check voltage between terminals VC and E2 of ECM connector (See page DI-74 , step 9).**

NG → **Check and replace ECM (See page IN-30).**

OK

2	**Check voltage between terminals PTNK and E2 of ECM connectors (See page DI-74 , step 10).**

OK → **Check and replace ECM (See page IN-30).**

NG

3	**Check for open and short in harness and connector between vapor pressure sensor and ECM (See page IN-30).**

NG → **Repair or replace harness or connector.**

OK

Replace vapor pressure sensor.

DI082-09

DTC	P0500	Vehicle Speed Sensor Malfunction

CIRCUIT DESCRIPTION

This sensor is mounted in the combination meter. It contains a magnet which is rotated by the speedometer cable.
Turning the reed switch ON and OFF 4 times for every revolution of the speedometer.
It is then transmitted to the Engine ECM. The Engine ECM determines the vehicle speed based on the frequency of these pulse signals.

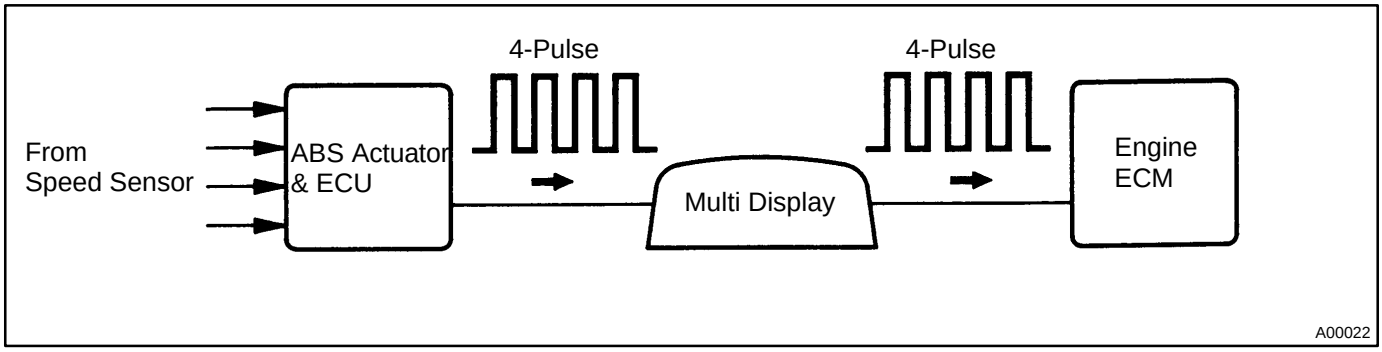

DTC No.	DTC Detecting Condition	Trouble Area
P0500/61	No vehicle speed sensor signal to Engine & ECT ECU under the following conditions: (2 trip detection logic) Vehicle is being driven	●Combination meter ●Open or short in speed sensor circuit ●ECM

WIRING DIAGRAM

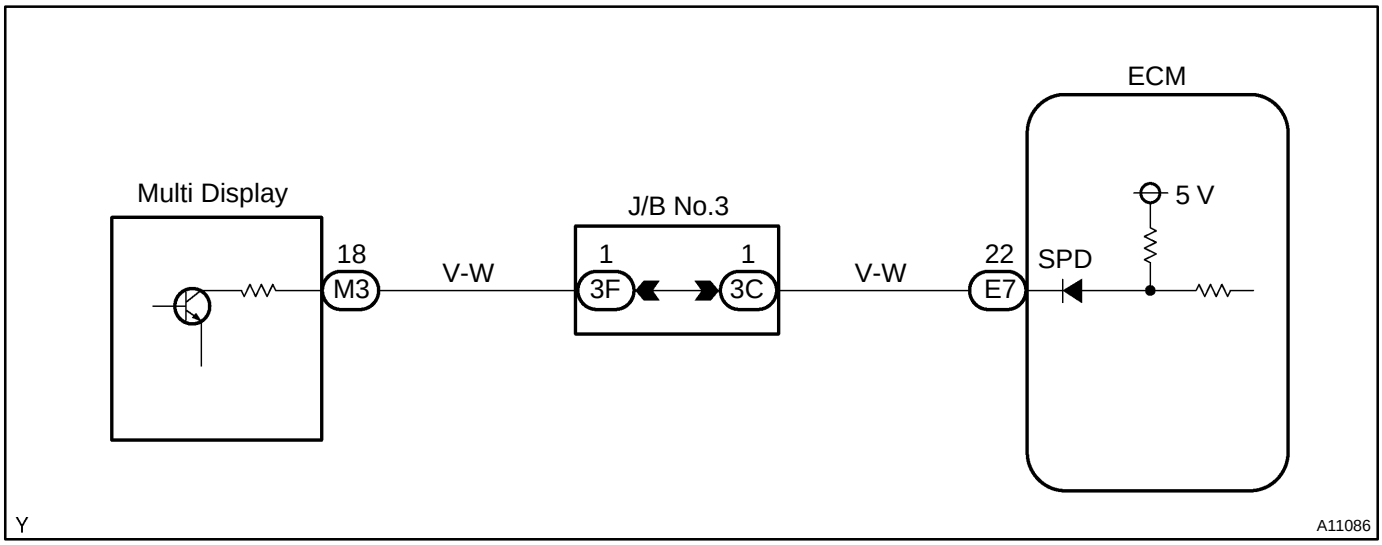

INSPECTION PROCEDURE

HINT:
Read freeze frame data using TOYOTA hand-held tester or OBD II scan tool. Because freeze frame records the engine conditions when the malfunction is detected. When troubleshooting, it is useful for determining whether the vehicle was running or stopped, the engine was warmed up or not, the air-fuel ratio was lean or rich, etc. at the time of the malfunction.

1	**Check operation of speedometer.**

CHECK:

Drive the vehicle and check if the operation of the speedometer in the combination meter is normal.

HINT:

The vehicle speed sensor is operating normally if the speedometer display is normal.

NG → **Check speedometer circuit (See page BE-43).**

OK

2	**Check for short in harness and connector between terminal SPD of ECM and body ground.**

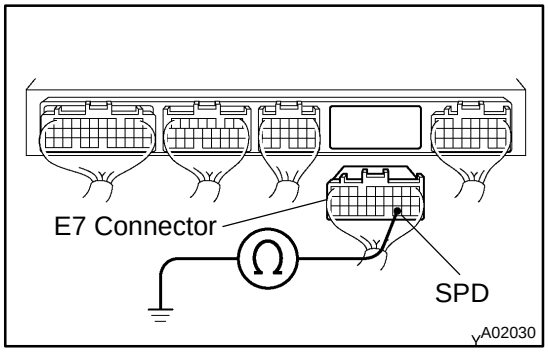

PREPARATION:

(a) Remove the glove compartment (See page SF-83).

(b) Disconnect the E7 connector from the ECM.

CHECK:

Check the continuity between terminal SPD of the ECM connector and body ground.

OK:

No continuity (1 MΩ or higher)

NG → **Repair or replace harness or connector.**

OK

3	**Check voltage between terminal SPD of ECM connector and body ground.**

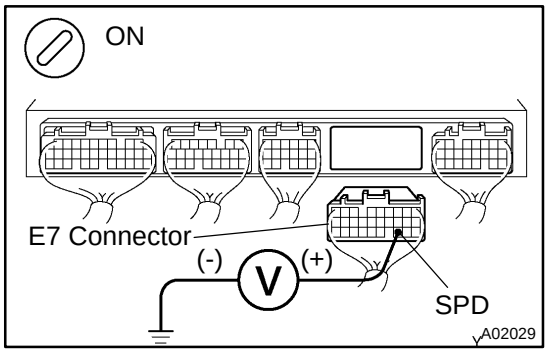

PREPARATION:

(a) Remove the glove compartment (See page SF-83).

(b) Disconnect the E7 connector from the ECM.

(c) Turn the ignition switch ON.

CHECK:

Measure the voltage between terminal SPD of the ECM connector and body ground.

OK:

Voltage: 9 - 14 V

NG → **Check for open in harness and connector between J/B No.3 and ECM (See page IN-30).**

OK

4	Check for open in harness and connector between J/B No.3 and combination meter (See page IN-30).

NG → Repair or replace harness or connector.

OK

Check and replace ECM (See page IN-30).

DI083-09

DTC	P0505	Idle Control System Malfunction

CIRCUIT DESCRIPTION

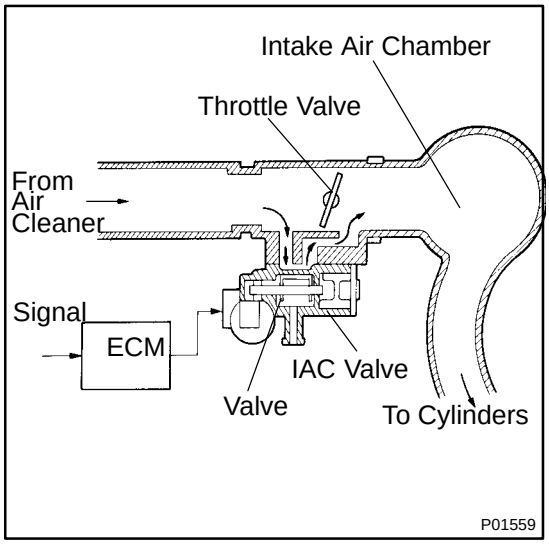

The rotary solenoid type IAC valve is located in front of the intake air chamber and intake air bypassing the throttle valve is directed to the IAC valve through a passage.
In this way the intake air volume bypassing the throttle valve is regulated, controlling the engine speed.
The ECM operates only the IAC valve to perform idle-up and provide feedback for the target idling speed.

DTC No.	DTC Detecting Condition	Trouble Area
P0505	Idle speed continues to vary greatly from the target speed (2 trip detection logic)	●Open or short in IAC valve circuit ●IAC valve is stuck or closed ●Open or short in A/C signal circuit ●Air induction system ●ECM

WIRING DIAGRAM

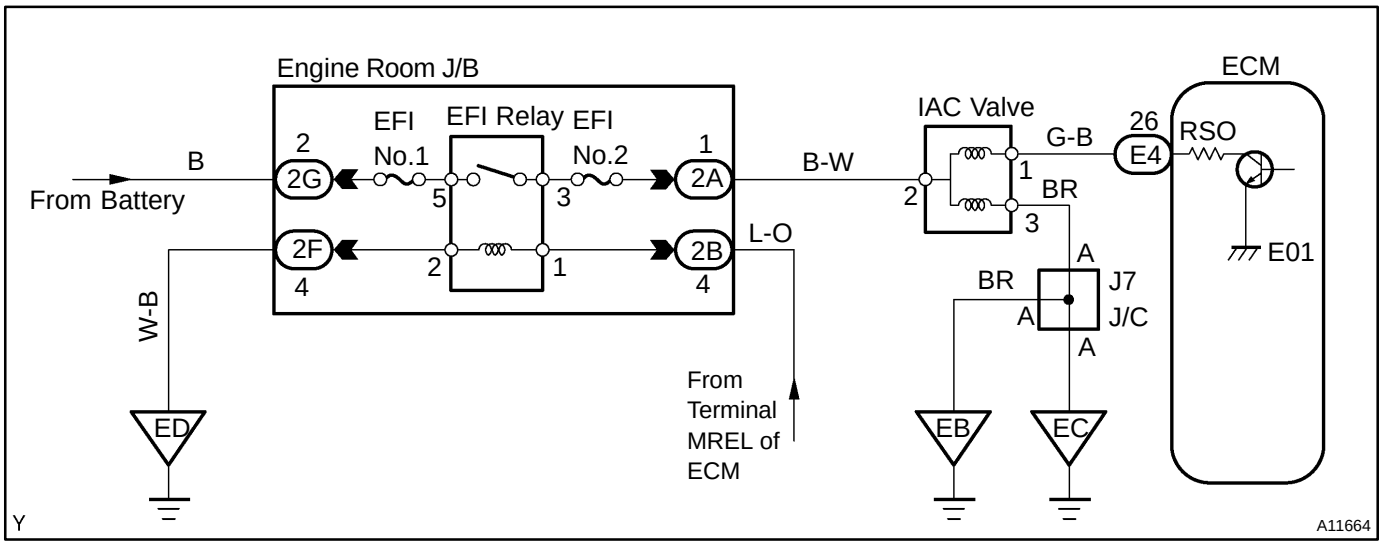

INSPECTION PROCEDURE

HINT:
Read freeze frame data using TOYOTA hand-held tester or OBD II scan tool. Because freeze frame records the engine conditions when the malfunction is detected. When troubleshooting, it is useful for determining whether the vehicle was running or stopped, the engine was warmed up or not, the air-fuel ratio was lean or rich, etc. at the time of the malfunction.

1	**Check idle speed.**

When using TOYOTA hand-held tester:

PREPARATION:

(a) Warm up the engine to normal operating temperature.
(b) Switch off all the accessories.
(c) Switch off the A/C.
(d) Shift transmission into the N range or neutral position.
(e) Connect the TOYOTA hand-held tester to the DLC3 on the vehicle and select the ACTIVE TEST mode.

CHECK:

Check the difference of the engine speed between the ones, less than 5 sec. and more than 5 sec. after switching the TE1 from OFF to ON by the TOYOTA hand-held tester.

OK:

Difference of engine speed: More than 100 rpm

When not using TOYOTA hand-held tester:

PREPARATION:

(a) Warm up the engine to normal operating temperature.
(b) Switch off all the accessories.
(c) Switch off the A/C.
(d) Shift transmission into the N range or neutral position.
(e) Connect the OBDII scan tool to DLC3 on the vehicle.
(f) Using SST, connect terminals TE1 and E1 of the DLC1.
SST 09843-18020

CHECK:

Check the difference of engine speed between the ones, less than 5 sec. and more than 5 sec. after connecting terminals TE1 and E1 of the DLC1.

OK:

Difference of engine speed: More than 100 rpm

OK	**Go to step 6.**

NG

2	**Check voltage between terminal RSO of ECM connector and body ground.**

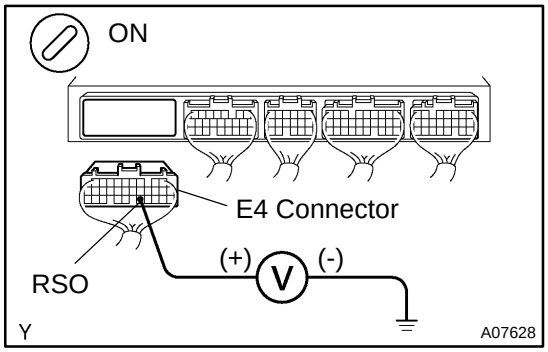

PREPARATION:

(a) Remove the glove compartment (See page SF-83).
(b) Disconnect the E4 connector from the ECM.
(c) Turn the ignition switch ON.

CHECK:

Measure the voltage between terminal RSO of the ECM connector and body ground.

OK:

Voltage: 9 - 14 V

OK	Go to step 4.

NG

3	Check IAC valve (See page SF-43).

NG	Replace IAC valve.

OK

Check for open and short in harness and connector between engine room J/B and IAC valve, and IAC valve and ECM (See page IN-30).

4	Check operation of IAC valve (See page SF-46).

NG	Repair or replace IAC valve.

OK

5	Check blockage of IAC valve and passage to bypass throttle valve.

NG	Repair or replace IAC valve.

OK

Check and replace ECM (See page IN-30).

6	Check for A/C signal circuit (See page DI-824).

NG	Repair or replace.

OK

Check air induction system (See page SF-1).

DI2H7-03

DTC	P1130	A/F Sensor Circuit Range/Performance Malfunction (Bank 1 Sensor 1)

DTC	P1150	A/F Sensor Circuit Range/Performance Malfunction (Bank 2 Sensor 1)

CIRCUIT DESCRIPTION

Refer to DTC P0125 on page DI-43 .

DTC No.	DTC Detecting Condition	Trouble Area
P1130 P1150	Voltage output* of A/F sensor remains at 3.8 V or more, or 2.8 V or less, during engine running after the engine is warmed up (2 trip detection logic) *: Output value changes at inside of ECM only	●Open or short in A/F sensor circuit ●A/F sensor ●Air induction system ●Fuel pressure ●Injector ●ECM
	Voltage output* of A/F sensor does not change from 3.30 V, during engine running after the engine is warmed up (2 trip detection logic) *: Output value changes at the inside of ECM only	
	Open or short in A/F sensor circuit (2 trip detection logic)	

HINT:

- After confirming DTC P1130, use the OBD II scan tool or TOYOTA hand−held tester to confirm voltage output of A/F sensor (AFS B1 S1/O2S B1 S1) from the CURRENT DATA.
- The A/F sensor's output voltage and the short−term fuel trim value can be read using the OBD II scan tool or TOYOTA hand−held tester.
- The ECM controls the voltage of the AFR+, AFL+, AFR− and AFL− terminals of the ECM to the fixed voltage. Therefore, it is impossible to confirm the A/F sensor output voltage without the OBDII scan tool or TOYOTA hand-held tester.
- OBD II scan tool (excluding TOYOTA hand−held tester) displays the one fifth of the A/F sensor output voltage which is displayed on the TOYOTA hand−held tester.

WIRING DIAGRAM

Refer to DTC P0125 on page DI-43 .

CONFIRMATION DRIVING PATTERN

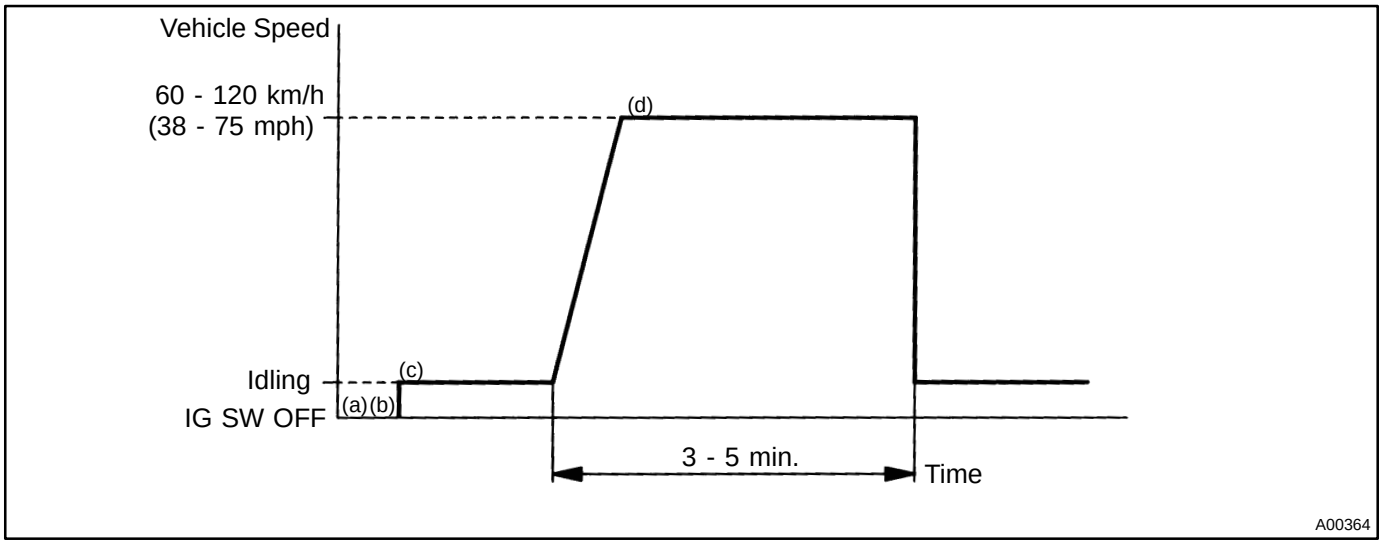

(a) Connect the TOYOTA hand-held tester to the DLC3.
(b) Switch the TOYOTA hand-held tester from the normal mode to the check mode (See page DI-3).
(c) Start the engine and warm it up with all the accessory switches OFF.
(d) Drive the vehicle at 60 - 120 km/h (38 - 75 mph) and engine speed at 1,400 - 3,200 rpm for 3 - 5 min.

HINT:

If a malfunction exists, the MIL will light up during step (d).

NOTICE:

If the conditions in this test are not strictly followed, detection of the malfunction will not be possible. If you do not have a TOYOTA hand-held tester, turn the ignition switch OFF after performing steps (c) and (d), then perform steps (c) and (d) again.

INSPECTION PROCEDURE

HINT:

- If DTC P1130 is displayed, check Bank 1 Sensor 1 circuit.
- If DTC P1150 is displayed, check Bank 2 Sensor 1 circuit.
- Read freeze frame data using TOYOTA hand-held tester or OBD II scan tool. Because freeze frame records the engine conditions when the malfunction is detected. When troubleshooting, it is useful for determining whether the vehicle was running or stopped, the engine was warmed up or not, the air-fuel ratio was lean or rich, etc. at the time of the malfunction.

1	**Are there any other codes (besides DTC P1130, P1150) being output?**

YES → **Go to relevant DTC chart (See page DI-14).**

NO

2	**Check output voltage of A/F sensor.**

PREPARATION:

(a) Connect the OBD II scan tool or TOYOTA hand-held tester to the DLC3.

(b) Warm up the A/F sensor with the engine speed at 2,500 rpm for approx. 90 sec.

CHECK:

Read the voltage value of the A/F sensor on the screen of OBDII scan tool or TOYOTA hand-held tester when you perform all the following conditions.

HINT:

The voltage of the AFR+ or AFL+ terminal of the ECM is fixed at 3.3 V and the voltage of the AFR- or AFL- terminal is fixed at 3.0 V. Therefore, it is impossible to check the A/F sensor output voltage at the terminals (AFR+, AFL+/AFR-, AFL-) of the ECM.

OK:

Condition	A/F Sensor Voltage Value
Engine idling	●Not remains at 3.30 V (0.660 V*) ●Not remains at 3.8 V (0.76 V*) or more ●Not remains at 2.8 V (0.56 V*) or less *: When you use OBD II scan tool (excluding TOYOTA hand-held tester)
Engine racing	
Driving at engine speed 1,500 rpm or more and vehicle speed 40 km/h (25 mph) or more, and operate throttle valve open and close	

HINT:

- During fuel enrichment, there is a case that the output voltage of the A/F sensor is below 2.8 V (0.56 V*), it is normal.
- During fuel cut, there is a case that the output voltage of the A/F sensor is above 3.8 V (0.76 V*), it is normally.
- If the output voltage of the A/F sensor remains at 3.30 V (0.660 V*) even after performing all the above conditions, the A/F sensor circuit may be open.
- If the output voltage of the A/F sensor remains at 3.8 V (0.76 V*) or more, or 2.8 V (0.56 V*) or less even after performing all the above conditions, the A/F sensor circuit may be short.

*: When you use the OBD II scan tool (excluding TOYOTA hand-held tester).

OK → **Go to step 9.**

NG

3	**Check for open and short in harness and connector between ECM and A/F sensor (See page IN-30).**

NG → **Repair or replace harness or connector.**

OK

4	Check resistance of A/F sensor heater (See page SF-79).

NG → Replace A/F sensor.

OK

5	Check air induction system (See page SF-1).

NG → Repair or replace.

OK

6	Check fuel pressure (See page SF-6).

NG → Check and repair fuel pump, pressure regulator, fuel pipe line and filter (See page SF-1).

OK

7	Check injector injection (See page SF-23).

NG → Replace injector.

OK

Replace A/F sensor.

8	Perform confirmation driving pattern (See page DI-106).

Go

9	Is there DTC P1130 or P1150 being output again?

YES → Check and replace ECM (See page IN-30).

NO

10	Did vehicle runs out of fuel in past?

NO → Check for intermittent problems (See page DI-3).

YES

DTC P1130 or P1150 is caused by running out of fuel.

DTC	P1133	A/F Sensor Circuit Response Malfunction (Bank 1 Sensor 1)

DTC	P1153	A/F Sensor Circuit Response Malfunction (Bank 2 Sensor 1)

CIRCUIT DESCRIPTION

Refer to DTC P0125 on page DI-43 .

DTC No.	DTC Detecting Condition	Trouble Area
P1133 P1153	After engine is warmed up, and during vehicle driving at engine speed 1,400 rpm or more and vehicle speed 60 km/h (38 mph) or more, if the response characteristic of A/F sensor becomes deteriorated (2 trip detection logic)	●Open or short in A/F sensor circuit ●A/F sensor ●Air induction system ●Fuel pressure ●Injector ●ECM

WIRING DIAGRAM

Refer to DTC P0125 on page DI-43 .

INSPECTION PROCEDURE

HINT:

Read freeze frame data using TOYOTA hand-held tester or OBD II scan tool. Because freeze frame records the engine conditions when the malfunction is detected. When troubleshooting, it is useful for determining whether the vehicle was running or stopped, the engine was warmed up or not, the air-fuel ratio was lean or rich, etc. at the time of the malfunction.

1	**Are there any other codes (besides DTC P1133, P1153) being output?**

YES → **Go to relevant DTC chart (See page DI-14).**

NO

2	**Connect OBDII scan tool or TOYOTA hand-held tester, and read value for voltage output of A/F sensor.**

PREPARATION:

(a) Connect the OBD II scan tool or TOYOTA hand-held tester to the DLC3.

(b) Warm up the A/F sensor with the engine speed at 2,500 rpm for approx. 90 sec.

CHECK:

Read the voltage of the A/F sensor on the screen of the OBD II scan tool or TOYOTA hand-held tester when you perform all the following conditions.

HINT:
The voltage of the AFR+ or AFL+ terminal of the ECM is fixed at 3.3 V and the voltage of the AFR- or AFL- terminal is fixed at 3.0 V. Therefore, it is impossible to check the A/F sensor output voltage at the terminals (AFR+, AFL+/AFR-, AFL-) of the ECM.

OK:

Condition	A/F Sensor Voltage value
Engine idling	●Not remains at 3.30 V (0.660 V*) ●Not remains at 3.8 V (0.76 V*) or more ●Not remains at 2.8 V (0.56 V*) or less *: When you use the OBD II scan tool (excluding TOYOTA hand-held tester)
Engine racing	
Driving at engine speed 1,500 rpm or more and vehicle speed 40 km/h (25 mph) or more, and operate throttle valve open and close	

HINT:

- During fuel enrichment, there is a case that the output voltage of the A/F sensor is below 2.8 V (0.56 V*), it is normal.
- During fuel cut, there is a case that the output voltage of the A/F sensor is above 3.8 V (0.76 V*), it is normal.
- If the output voltage of the A/F sensor remains at 3.30 V (0.660 V*) even after performing all the above conditions, the A/F sensor circuit may be open.
- If the output voltage of the A/F sensor remains at 3.8 V (0.76V*) or more, or 2.8 V (0.56 V*) or less even after performing all the above conditions, the A/F sensor circuit may be short.

*: When you use the OBD II scan tool (excluding TOYOTA hand-held tester).

OK → **Go to step 9.**

NG

3	**Check for open and short in harness and connector between ECM and A/F sensor (See page IN-30).**

NG → **Repair or replace harness or connector.**

OK

4	**Check resistance of A/F sensor heater (See page SF-79).**

NG → **Replace A/F sensor.**

OK

5	Check air induction system (See page SF-1).

NG → Repair or replace.

OK

6	Check fuel pressure (See page SF-6).

NG → Check and repair fuel pump, pressure regulator, fuel pipe line and filter (See page SF-1).

OK

7	Check injector injection (See page SF-23).

NG → Replace injector.

OK

Replace A/F sensor.

8	Perform confirmation driving pattern (See page DI-106).

Go

9	Is there DTC P1133 or P1153 being output again?

YES → Check and replace ECM (See page IN-30).

NO

10	Did vehicle runs out of fuel in past?

NO → Check for intermittent problems (See page DI-3).

YES

DTC P1133 or P1153 is caused by running out of fuel.

DI2H9-03

DTC	P1135	A/F Sensor Heater Circuit Malfunction (Bank 1 Sensor 1)

DTC	P1155	A/F Sensor Heater Circuit Malfunction (Bank 2 Sensor 1)

CIRCUIT DESCRIPTION

Refer to DTC P0125 on page DI-43 .

DTC No.	DTC Detecting Condition	Trouble Area
P1135 P1155	When the heater operates, heater current exceeds 8 A (2 trip detection logic)	●Open or short in heater circuit of A/F sensor ●A/F sensor heater ●ECM
	Heater current of 0.25 A or less when the heater operates (2 trip detection logic)	

WIRING DIAGRAM

Refer to DTC P0125 on page DI-43 .

INSPECTION PROCEDURE

HINT:

Read freeze frame data using TOYOTA hand-held tester or OBD II scan tool. Because freeze frame records the engine conditions when the malfunction is detected. When troubleshooting, it is useful for determining whether the vehicle was running or stopped, the engine was warmed up or not, the air-fuel ratio was lean or rich, etc. at the time of the malfunction.

1	**Check voltage between terminals HAFL, HAFR of ECM connector and body ground.**

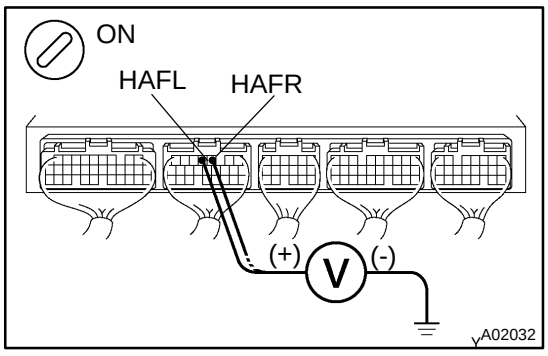

PREPARATION:

(a) Remove the glove compartment (See page SF-83).

(b) Turn the ignition switch ON.

CHECK:

Measure the voltage between terminals HAFL, HAFR of the ECM connector and body ground.

OK:

Voltage: 9 - 14 V

OK	**Check and replace ECM (See page IN-30).**

NG

2	**Check resistance of A/F sensor heater (See page SF-79).**

NG → Replace A/F sensor.

OK

3	Check A/F sensor heater relay (Marking: A/F) (See page SF-61).

NG → Replace A/F sensor heater relay.

OK

Check and repair harness or connector between A/F sensor heater relay and A/F sensor, and A/F sensor and ECM (See page IN-30).

DI6T8-01

DTC	P1300	Igniter Circuit Malfunction (No.1)

DTC	P1305	Igniter Circuit Malfunction (No.2)

DTC	P1310	Igniter Circuit Malfunction (No.3)

DTC	P1315	Igniter Circuit Malfunction (No.4)

DTC	P1320	Igniter Circuit Malfunction (No.5)

DTC	P1325	Igniter Circuit Malfunction (No.6)

CIRCUIT DESCRIPTION

A Direct Ignition System (DIS) has been adopted. The DIS improves the ignition timing accuracy, reduces high-voltage loss, and enhances the the overall reliability of the ignition system by eliminating the distributor. The DIS is a 1-cylinder ignition system which ignites one cylinder with one ignition coil. In the 1-cylinder ignition system, the one spark plug is connected to the end of the secondary winding. High voltage generated in the secondary winding is applied directly to the spark plug. The spark of the spark plug pass from the center elecrtode to the ground electrode.

The ECM determines ignition timing and outputs the ignition signals (IGT) for each cylinder. Based on IGT signals, the power transistors in the igniter cuts off the current to the primary coil in the ignition coil is supplied to the spark plug that are connected to the end of the secondary coil. At the same time, the igniter also sends an ignition confirmation signal (IGF) as a fail-safe measure to the ECM.

DTC No.	DTC Detecting Condition	Trouble Area
P1300 P1305 P1310 P1315 P1320 P1325	Condition (a) is repeated 3 times consecutively during 6 consecutively IGT signals while engine is running (a) IGF signal is not input to ECM for 2 or more ignitions	●Ignition system ●Open or short in IGF or IGT circuit from ignition coil with igniter ●Ignition coil with igniter ●ECM

WIRING DIAGRAM

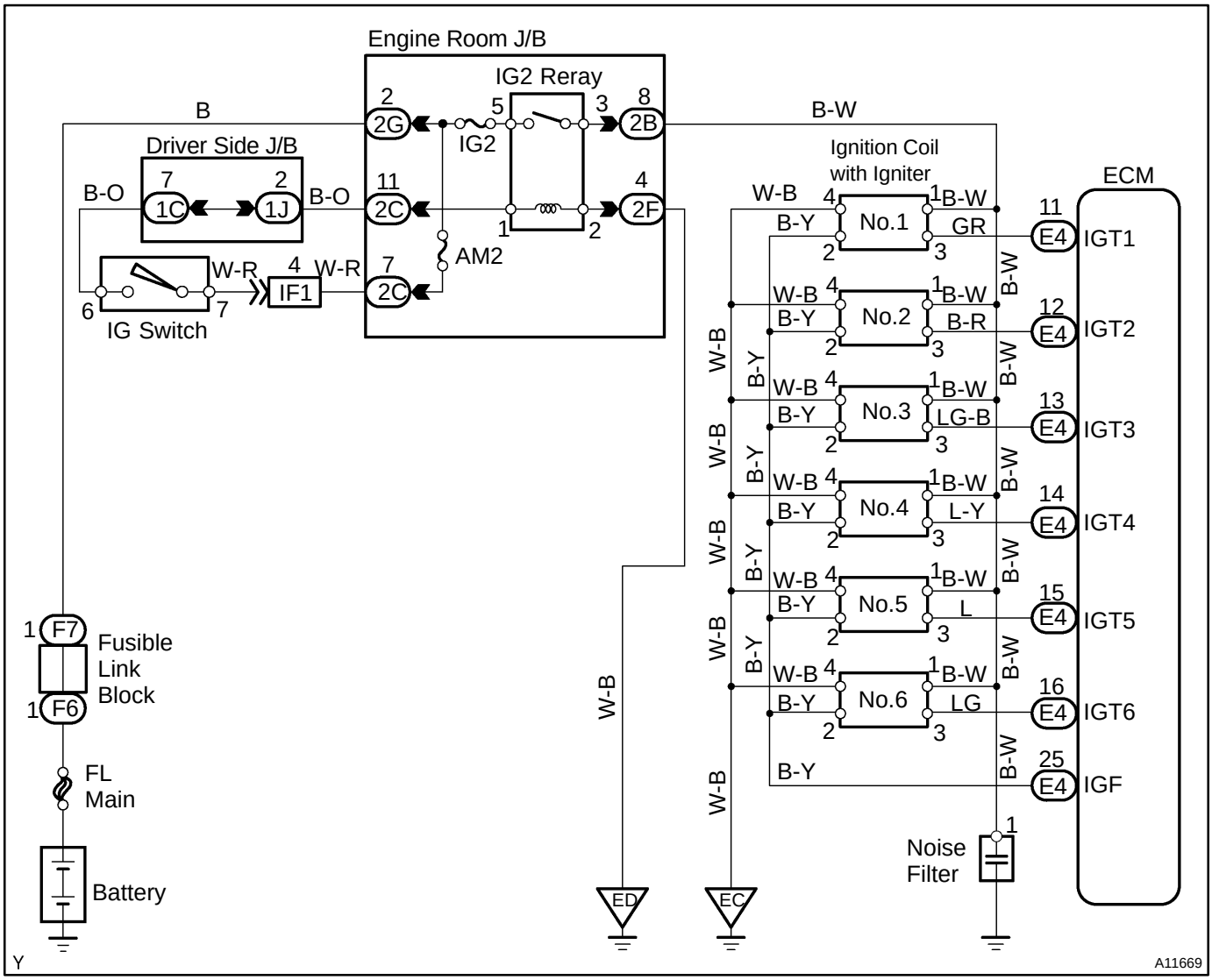

INSPECTION PROCEDURE

HINT:

- If DTC P1300 is displayed, check No.1 ignition coil with igniter circuit.
- If DTC P1305 is displayed, check No.2 ignition coil with igniter circuit.
- If DTC P1310 is displayed, check No.3 ignition coil with igniter circuit.
- If DTC P1315 is displayed, check No.4 ignition coil with igniter circuit.
- If DTC P1320 is displayed, check No.5 ignition coil with igniter circuit.
- If DTC P1325 is displayed, check No.6 ignition coil with igniter circuit.
- If DTCs P1300, P1315 and P1325, are output simultaneously, IGF1 circuit may be open or short.
- If DTCs P1305, P1310 and P1320, are output simultaneously, IGF2 circuit may be open or short.
- Read freeze frame data using TOYOTA hand-held tester or OBD II scan tool. Because freeze frame records the engine conditions when the malfunction is detected. When troubleshooting, it is useful for determining whether the vehicle was running or stopped, the engine was warmed up or not, the air-fuel ratio was lean or rich, etc. at the time of the malfunction.

1	**Check spark plug and spark (See page DI-58).**

NG → Go to step 4.

OK

2	Check for open and short in harness and connector in IGF and IGT signal circuits between ECM and ignition coil with igniter (See page IN-30).

NG → Repair or replace harness or connector.

OK

3	Disconnect ignition coil with igniter connector, and check voltage between terminals IGF of ECM connector and body ground.

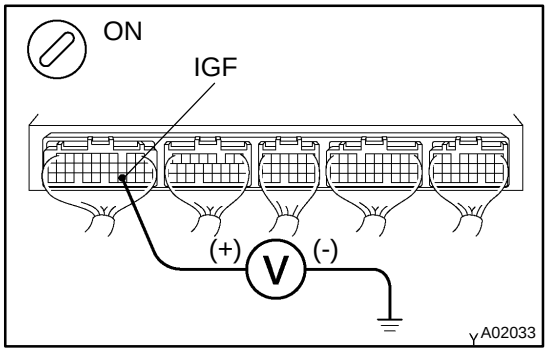

PREPARATION:

(a) Remove the glove compartment (See page SF-83).
(b) Disconnect the ignition coil with the igniter connector.
(c) Turn the ignition switch ON.

CHECK:

Measure the voltage between terminals IGF of the ECM connector and body ground.

OK:

Voltage: 4.5 - 5.5 V

OK → Replace ignition coil with igniter.

NG

Check and replace ECM (See page IN-30).

4	Check for open and short in harness and connector in IGT signal circuit between ECM and ignition coil with igniter (See page IN-30).

NG → Repair or replace harness or connector.

OK

5	Check voltage between terminals IGT1 - IGT6 of ECM connector and body ground.

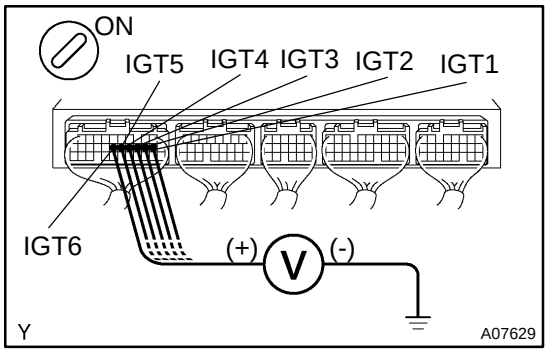

PREPARATION:

(a) Remove the glove compartment (See page SF-83).

(b) Turn the ignition switch ON.

CHECK:

Measure the voltage between terminals IGT1 - IGT6 of the ECM connector and body ground when the engine is cranked.

OK:

Voltage: More than 0.1 V and less than 4.5 V

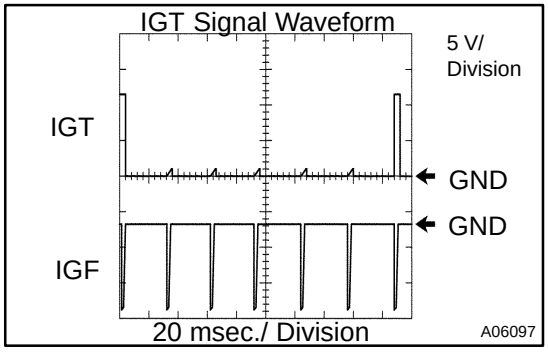

Reference: INSPECTION USING OSCILLOSCOPE

During cranking or idling, check the waveform between terminals IGT1 - IGT6 and E1 of the ECM connector.

HINT:

Correct waveform appears as shown, with rectangle waves.

NG → **Check and replace ECM (See page IN-30).**

OK

6	Disconnect ignition coil with igniter connector, and check voltage between terminals IGT1 - IGT6 of ECM connector and body ground.

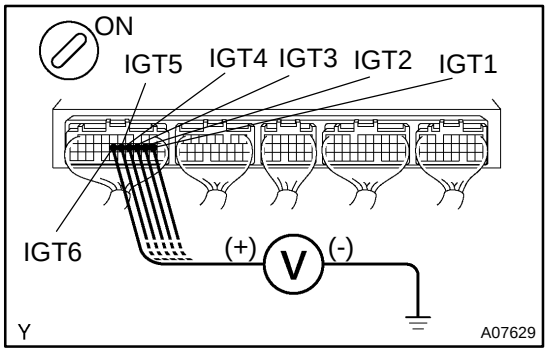

PREPARATION:

(a) Remove the glove compartment (See page SF-83).

(b) Disconnect the ignition coil with the igniter connector.

(c) Turn the ignition switch ON.

CHECK:

Measure the voltage between terminals IGT1 - IGT6 of the ECM connector and body ground when the engine is cranked.

OK:

Voltage: More than 0.1 V and less than 4.5 V

NG → **Check and replace ECM (See page IN-30).**

OK

7	Check ignition coil with igniter power source circuit.

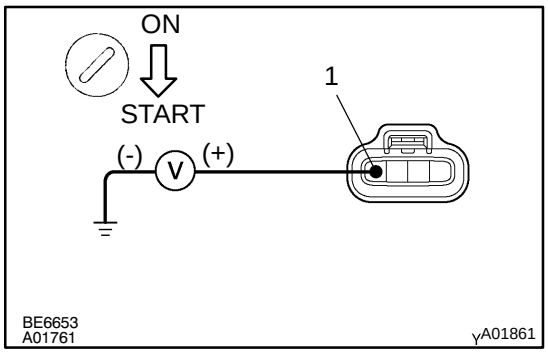

PREPARATION:
Disconnect the ignition coil with the igniter connector.
CHECK:
Measure the voltage between terminal 1 of the ignition coil with the igniter connector and body ground when the ignition switch is turned to ON and START position.
OK:

Voltage: 9 - 14 V

NG	Repair ignition coil with igniter power source circuit.

OK

8	Check for open and short in harness and connector between ignition switch and ignition coil with igniter (See page IN-30).

NG	Repair or replace harness or connector.

OK

9	Check IG2 fuse.

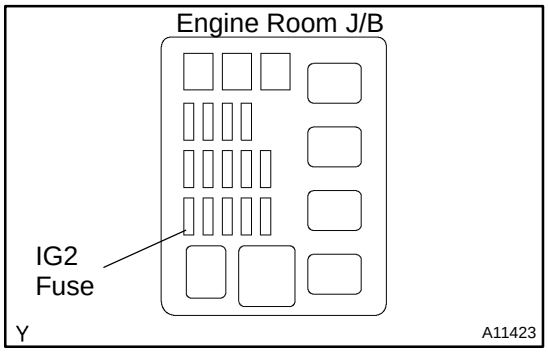

PREPARATION:
Remove the IG2 fuse from the engine room J/B.
CHECK:
Check the continuity of the IG2 fuse.
OK:

Continuity

NG	Check for short in all harness and components connected to IG2 fuse.

OK

10	**Check AM2 fuse.**

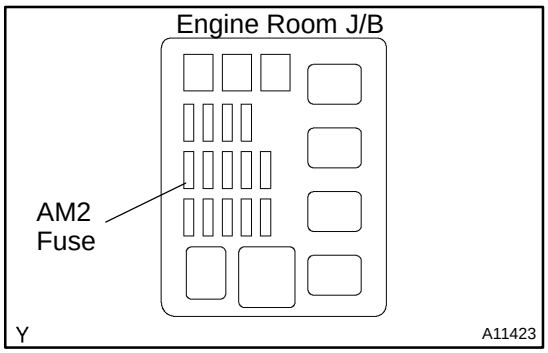

PREPARATION:
Remove the AM2 fuse from the engine room J/B.
CHECK:
Check the continuity of the AM2 fuse.
OK:

Continuity

NG → **Check for short in all harness and components connected to AM2 fuse.**

OK

11	**Check ignition relay (Marking: IG2) (See page IG-10).**

NG → **Replace ignition relay.**

OK

Replace ignition coil with igniter.

DTC	P1335	Crankshaft Position Sensor Circuit Malfunction (During engine running)

CIRCUIT DESCRIPTION

Refer to DTC P0335 on page DI-67 .

DTC No.	DTC Detecting Condition	Trouble Area
P1335	No crankshaft position sensor signal to ECM with engine speed 1,000 rpm or more	●Open or short in crankshaft position sensor circuit ●Crankshaft position sensor ●Crankshaft timing pulley ●ECM

WIRING DIAGRAM

Refer to DTC P0335 on page DI-67 .

INSPECTION PROCEDURE

Refer to DTC P0335 on page DI-67 .

HINT:

Read freeze frame data using TOYOTA hand-held tester or OBD II scan tool. Because freeze frame records the engine conditions when the malfunction is detected. When troubleshooting, it is useful for determining whether the vehicle was running or stopped, the engine was warmed up or not, the air-fuel ratio was lean or rich, etc. at the time of the malfunction.

DI6T9-01

DTC	P1345	VVT Sensor/Camshaft Position Sensor Circuit Malfunction (Bank 1)

DTC	P1350	VVT Sensor/Camshaft Position Sensor Circuit Malfunction (Bank 2)

CIRCUIT DESCRIPTION

VVT sensor (VV signal) consists of a magnet, iron core and pickup coil.
The VV signal plate has 3 teeth on its outer circumference and is installed the camshaft timing gear.
When the camshafts rotate, the protrusion on the signal plate and the air gap on the pickup coil change, causing fluctuations in the magnetic field and generating an electromotive force in the pickup coil.
The actual camshaft angle is detected by the VVT sensor and it provides feedback to the ECM to control the intake valve timing in response to during condition.

DTC No.	DTC Detecting Condition	Trouble Area
P1345 P1350	No VVT sensor (Camshaft position sensor) signal to ECM during cranking at 4 sec. or more	●Open or short in VVT sensor (camshaft position sensor) circuit ●VVT sensor (camshaft position sensor) ●Camshaft timing gear ●ECM
	No VVT sensor (Camshaft position sensor) signal to ECM with 5 sec. or more engine speed 600 rpm or more	
	While crankshaft rotates twice, VVT sensor (Camshaft position sensor) signal will be input to ECM 5 times.	

WIRING DIAGRAM

Refer to DTC P0335 on page DI-67 .

INSPECTION PROCEDURE

HINT:

- If DTC P1345 is displayed, check left bank VVT sensor (camshaft position sensor).
- If DTC P1350 is displayed, check right bank VVT sensor (camshaft position sensor).
- Read freeze frame data using TOYOTA hand-held tester or OBD II scan tool. Because freeze frame records the engine conditions when the malfunction is detected. When troubleshooting, it is useful for determining whether the vehicle was running or stopped, the engine was warmed up or not, the air-fuel ratio was lean or rich, etc. at the time of the malfunction.

1	**Check resistance of VVT sensor (See page IG-7).**

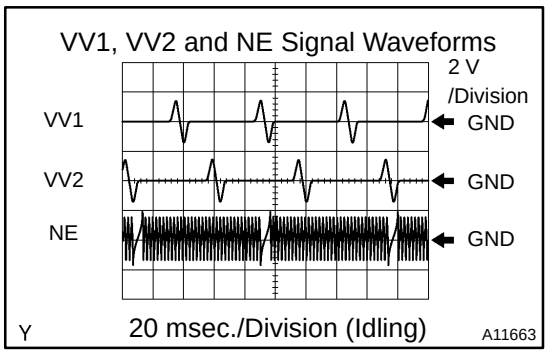

Reference: INSPECTION USING OSCILLOSCOPE
During idling, check the waveforms between terminals VV1 and NE+, and VV2 and NE- of the ECM connector.
HINT:

- The correct waveforms are as shown.
- The waveform frequency is shortened as the engine speed becomes higher.

NG	**Replace VVT sensor.**

OK

2	Check for open and short in harness and connector between ECM and VVT sensor (See page IN-30).

NG → Repair or replace harness or connector.

OK

3	Inspect sensor installation and signal plate teeth of camshaft timing gear.

NG → Tighten sensor. Replace camshaft timing gear.

OK

Check and replace ECM (See page IN-30).

DI6TA-01

DTC	P1346	VVT Sensor/Camshaft Position Sensor Circuit Range/Performance Problem (Bank 1)

DTC	P1351	VVT Sensor/Camshaft Position Sensor Circuit Range/Performance Problem (Bank 2)

CIRCUIT DESCRIPTION

Refer to DTC P1345, P1350 on page DI-124 .

DTC No.	DTC Detection Condition	Trouble Area
P1346	Deviation in crankshaft position sensor signal and VVT sensor (bank 1) signal (2 trip detection logic)	●Mechanical system malfunction (Jumping teeth of timing belt, belt stretched) ●ECM
P1351	Deviation in crankshaft position sensor signal and VVT sensor (bank 2) signal (2 trip detection logic)	

WIRING DIAGRAM

Refer to DTC P1345, P1350 on page DI-124 .

INSPECTION PROCEDURE

HINT:

Read freeze frame data using TOYOTA hand-held tester or OBD II scan tool. Because freeze frame records the engine conditions when the malfunction is detected. When troubleshooting, it is useful for determining whether the vehicle was running or stopped, the engine was warmed up or not, the air-fuel ratio was lean or rich, etc. at the time of the malfunction.

1	**Check valve timing (Check for loose and jumping teeth of timing belt) (See page EM-15).**

NG → **Adjust valve timing (Repair or replace timing belt).**

OK

Check and replace ECM (See page IN-30).

DI6TB-01

DTC	P1349	VVT System Malfunction (Bank 1)

DTC	P1354	VVT System Malfunction (Bank 2)

CIRCUIT DESCRIPTION

VVT system controls the intake valve timing to proper timing in response to driving condition.
ECM controls Oil Control Valve (OCV) to make the intake valve timing properly, and, oil pressure controlled with OCV is supplied to the VVT controller, and then, VVT controller changes relative position between the camshaft and the crankshaft.

DTC No.	DTC Detecting Condition	Trouble Area
P1349 P1354	Condition (a) or (b) continues for after the engine is warmed up and engine speed at 400 - 4,000 rpm: (a) Valve timing does not change from of current valve timing (b) Current valve timing is fixed	●Valve timing ●OCV ●VVT controller assembly ●ECM

WIRING DIAGRAM

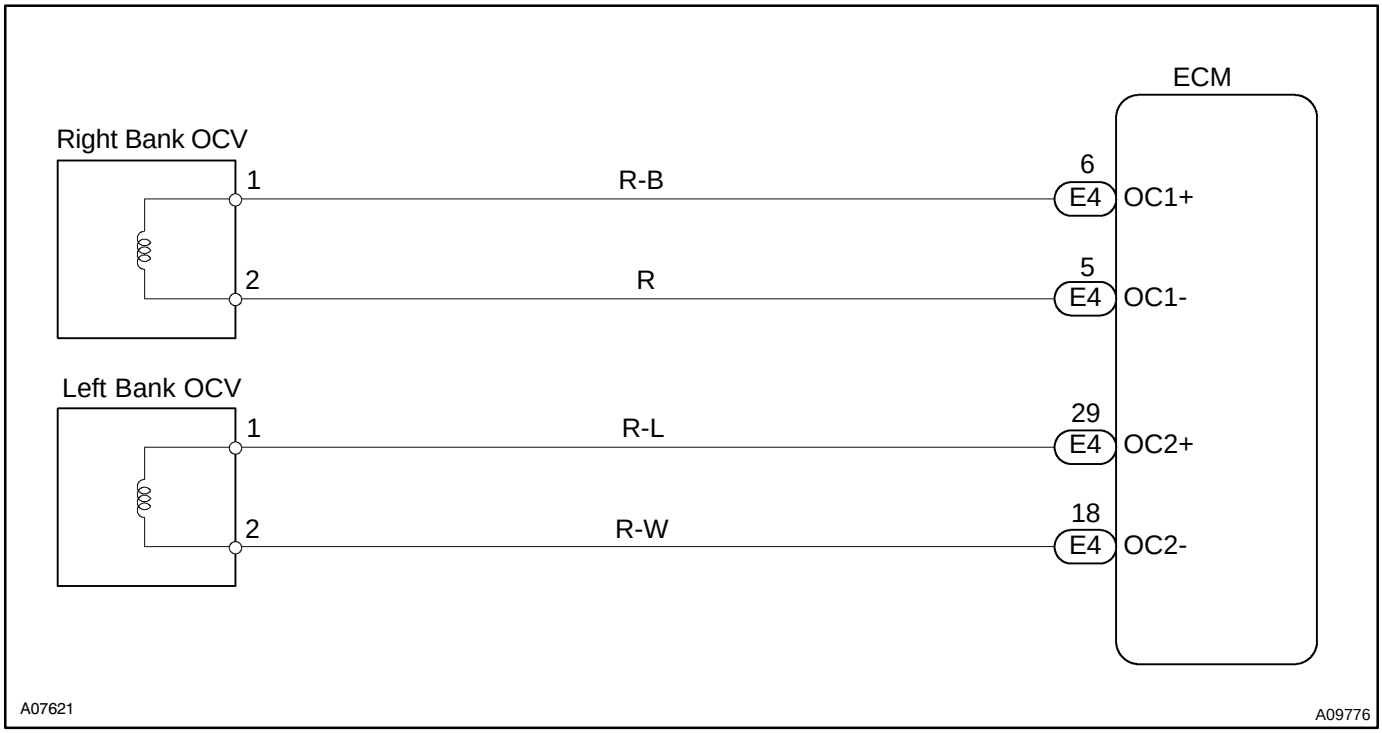

INSPECTION PROCEDURE

HINT:

- If DTC P1349 is displayed, check left bank VVT system circuit.
- If DTC P1354 is displayed, check right bank VVT system circuit.
- Read freeze frame data using TOYOTA hand-held tester or OBD II scan tool. Because freeze frame records the engine conditions when the malfunction is detected. When troubleshooting, it is useful for determining whether the vehicle was running or stopped, the engine was warmed up or not, the air-fuel ratio was lean or rich, etc. at the time of the malfunction.

TOYOTA hand-held tester:

1	**Check valve timing (See page EM-15).**

NG → **Repair valve timing.**

OK

2	**Check operation of OCV.**

PREPARATION:

(a) Start the engine and warmed it up.

(b) Connect the TOYOTA hand-held tester and select the VVT from the ACTIVE TEST menu.

CHECK:

Check the engine speed when operate the OCV by the TOYOTA hand-held tester.

OK:

OCV is OFF: Normal engine speed

OCV is ON: Rough idle or engine stall

OK → **VVT system is OK.***

*: DTCs P1349 and P1354 are also output after the foreign object is caught in some part of the system in the engine oil and the system returns to normal in a short time. As ECM controls so that foreign objects are ejected, there is no problem about VVT. There is also no problem since the oil filter should get the foreign object in the engine oil.

NG

3	**Check voltage between terminals OCV+ and OCV- of ECM connector.**

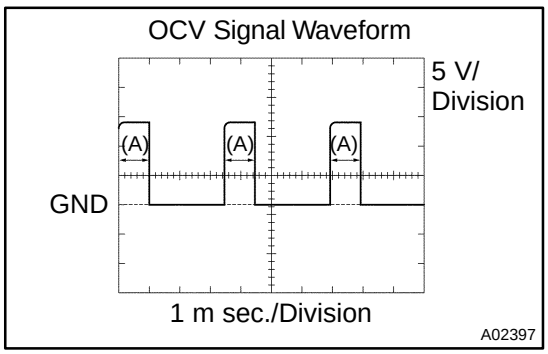

Reference: INSPECTION USING OSCILLOSCOPE

Turn the ignition switch ON, and check the waveform between terminals OCV+ and OCV- of the ECM connector.

HINT:

- The correct waveform is as shown.
- The waveform frequency (A) is lengthened as the engine speed becomes higher.

NG → **Check and replace ECM (See page IN-30).**

OK

4	**Check VVT controller assembly.**

PREPARATION:

(a) Remove the timing belt (See page EM-15).
(b) Remove the cylinder head cover.
(c) Remove the OCV (See page EM-31).
(d) Drain oil into the VVT controller assembly (See page EM-31).

CHECK:

Check whether the oil into VVT controller assembly is drained or not.

OK:

The oil into VVT controller assembly is drained.

NG → **Replace VVT controller assembly, and then go to step 5.**

OK

5	**Check OCV (See page SF-51).**

NG → **Replace OCV, and then go to step 6.**

OK

6	**Check blockage of OCV, oil check valve and oil pipe No.1.**

NG → **Repair or replace.**

OK

7	**Check whether or not DTC P1349/P1354 is stored.**

PREPARATION:

(a) Clear the DTC (See page DI-3).
(b) Perform simulation test.

CHECK:

Check whether or not DTC P1349/P1354 is stored (See page DI-3).

OK:

DTC P1349/P1354 is not stored.

OK → **VVT system is OK.***

*: DTCs P1349 and P1354 are also output after the foreign object is caught in some part of the system in the engine oil and the system returns to normal in a short time. As ECM controls so that foreign objects are ejected, there is no problem about VVT. There is also no problem since the oil filter should get the foreign object in the engine oil.

NG

Replace ECM

OBD II scan tool (excluding TOYOTA hand-held tester):

1	**Check valve timing (See page EM-15).**

NG → **Repair valve timing.**

OK

2	Check operation of OCV.

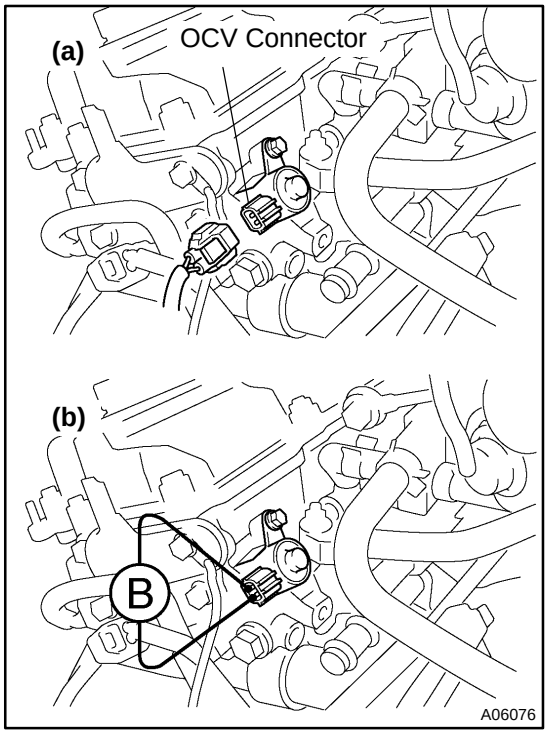

PREPARATION:

Start the engine.

CHECK:

(a) Check the engine speed when disconnecting the OCV connector.

(b) Check the engine speed when applying battery positive voltage between the terminals of the OCV.

RESULT:

Result	Check (a)	Check (b)
1	Normal engine speed	Rough idle or engine stall
2	Except 1	

2	Go to step 4.

1

3	Check voltage between terminals OCV+ and OCV- of ECM connector.

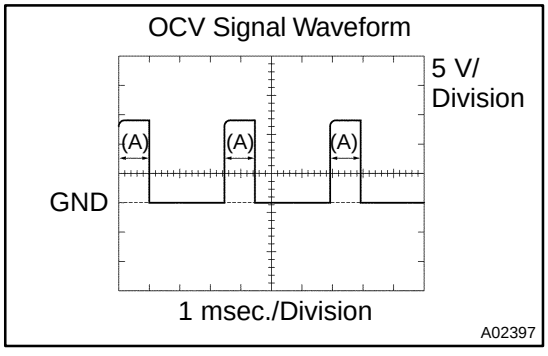

Reference: INSPECTION USING OSCILLOSCOPE

Turn the ignition switch ON, check the waveform between terminals OCV+ and OCV- of the ECM connector.

HINT:

- The correct waveform is as shown.
- The waveform frequency (A) is lengthened as the engine speed becomes higher.

OK	VVT system is OK.*

*: DTCs P1349 and P1354 are also output after the foreign object is caught in some part of the system in the engine oil and the system returns to normal in a short time. As ECM controls so that foreign objects are ejected, there is no problem about VVT. There is also no problem since the oil filter should get the foreign object in the engine oil.

NG

Check and replace ECM (See page IN-30).

4	**Check VVT controller assembly.**

PREPARATION:

(a) Remove the timing belt (See page EM-15).
(b) Remove the cylinder head cover.
(c) Remove the OCV (See page EM-31).
(d) Drain oil into the VVT controller assembly (See page EM-31).

CHECK:

Check whether the oil into VVT controller assembly is drained or not.

OK:

The oil into VVT controller assembly is drained.

NG → **Replace VVT controller assembly, and then go to step 5.**

OK

5	**Check OCV (See page SF-51).**

NG → **Replace OCV, and then go to step 6.**

OK

6	**Check blockage of OCV, oil check valve and oil pipe No.1.**

NG → **Repair or replace.**

OK

7	**Check whether or not DTC P1349/P1354 is stored.**

PREPARATION:

(a) Clear the DTC (See page DI-3).
(b) Perform simulation test.

CHECK:

Check whether or not DTC P1349/P1354 is stored (See page DI-3).

OK:

DTC P1349/P1354 is not stored.

OK → **VVT system is OK.***

*: DTCs P1349 and P1354 are also output after the foreign object is caught in some part of the system in the engine oil and the system returns to normal in a short time. As ECM controls so that foreign objects are ejected, there is no problem about VVT. There is also no problem since the oil filter should get the foreign object in the engine oil.

NG

Replace ECM.

DI088-09

DTC	P1520	Stop Light Switch Signal Malfunction

CIRCUIT DESCRIPTION

This signal is used to detect when the brakes have been applied. The STP signal voltage is the same as the voltage supplied to the stop lights.
The STP signal is used mainly to control the fuel cut-off engine speed (The fuel cut-off engine speed is reduced slightly when the vehicle is braking.).

DTC No.	DTC Detecting Condition	Trouble Area
P1520	Stop light switch does not turn off when repeating driving at 30 km or more 10 time or more after depressing brake (2 trip detection logic)	●Short in stop light switch signal circuit ●Stop light switch ●ECM

WIRING DIAGRAM

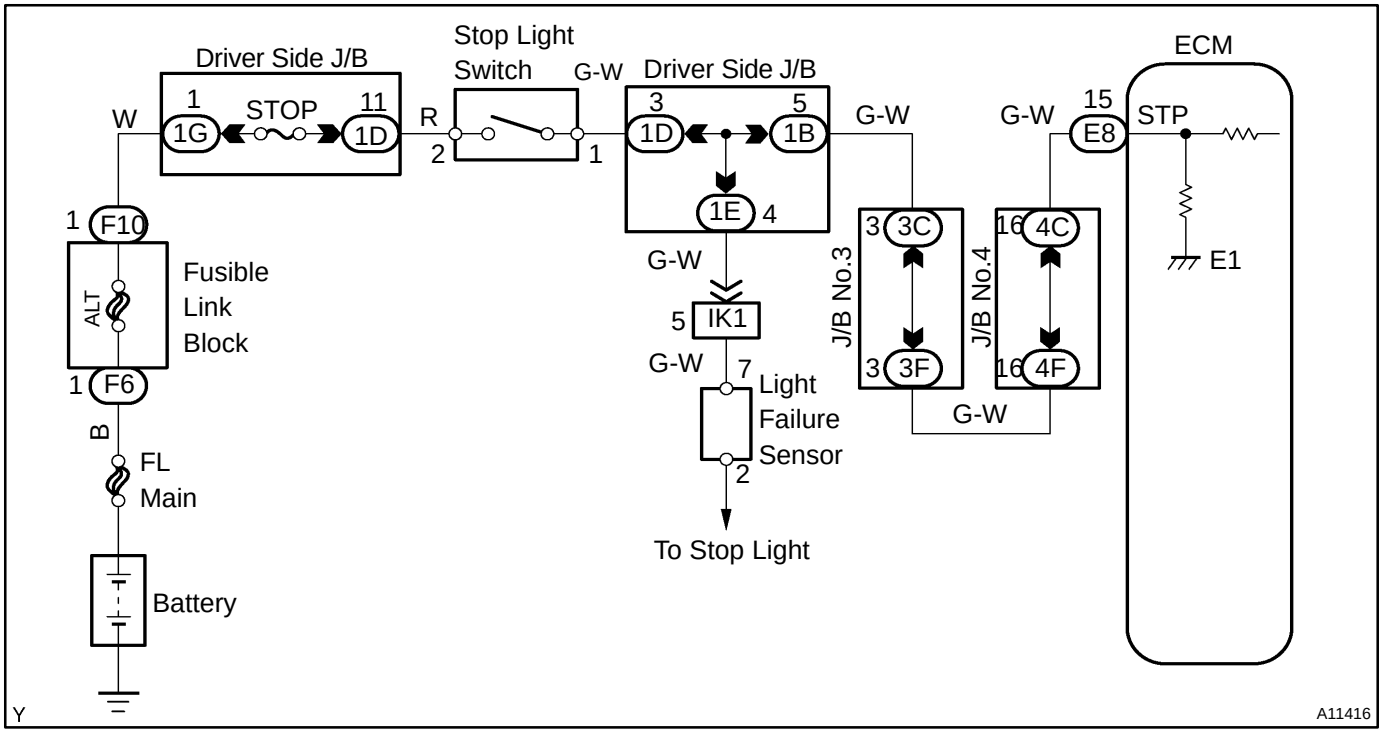

INSPECTION PROCEDURE

HINT:
Read freeze frame data using TOYOTA hand-held tester or OBD II scan tool. Because freeze frame records the engine conditions when the malfunction is detected. When troubleshooting, it is useful for determining whether the vehicle was running or stopped, the engine was warmed up or not, the air-fuel ratio was lean or rich, etc. at the time of the malfunction.

1	**Check operation of stop light.**

CHECK:
Check if the stop lights go on and off normally when the brake pedal is operated and released.

NG	**Check and repair stop light circuit.**

OK

2	Check STP signal.

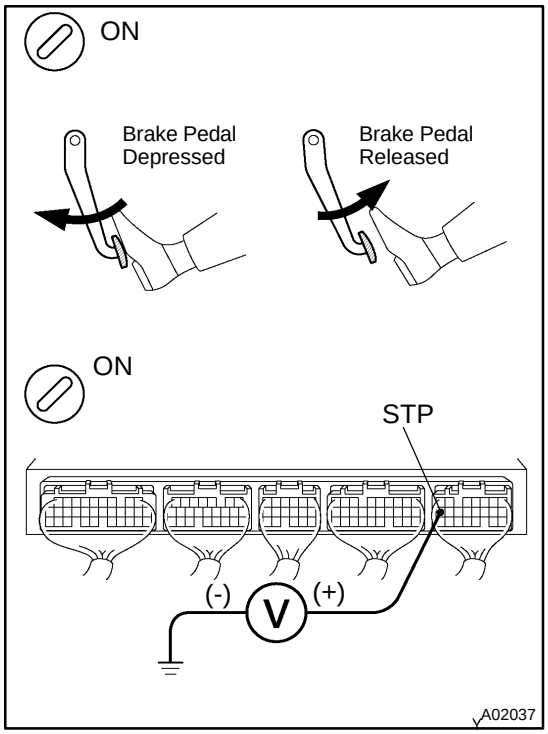

When using TOYOTA hand-held tester:

PREPARATION:

(a) Connect the TOYOTA hand-held tester to the DLC3.

(b) Turn the ignition switch ON and push the TOYOTA hand-held tester main switch ON.

CHECK:

Read the STP signal on the TOYOTA hand-held tester.

OK:

Brake Pedal	STP Signal
Depressed	ON
Released	OFF

When not using TOYOTA hand-held tester:

PREPARATION:

Turn the ignition switch ON.

CHECK:

Check the voltage between terminal STP of the ECM connector and body ground.

OK:

Brake Pedal	Voltage
Depressed	7.5 - 14 V
Released	Below 1.5 V

OK → **Check for intermittent problems (See page DI-3).**

NG

3	Check harness and connector between ECM and stop light switch (See page IN-30).

NG → **Repair or replace harness or connector.**

OK

Check and replace ECM (See page IN-30).

DI089-09

DTC	P1600	ECM BATT Malfunction

CIRCUIT DESCRIPTION

Battery positive voltage is supplied to terminal BATT of the ECM even when the ignition switch is OFF for use by the DTC memory and air-fuel ratio adaptive control value memory, etc.

DTC No.	DTC Detecting Condition	Trouble Area
P1600	Open in back up power source circuit	●Open in back up power source circuit ●ECM

HINT:

If DTC P1600 appear, the ECM does not store another DTC.

WIRING DIAGRAM

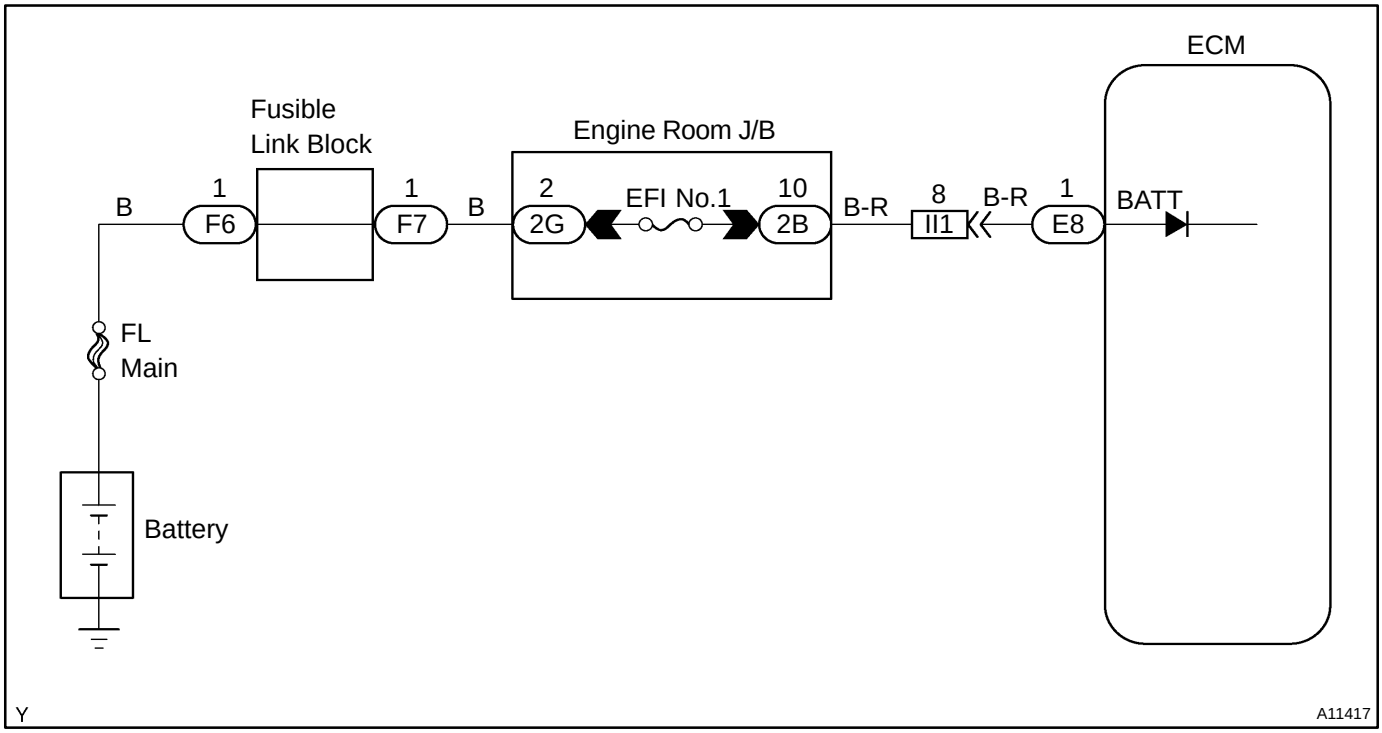

INSPECTION PROCEDURE

HINT:

Read freeze frame data using TOYOTA hand-held tester or OBD II scan tool. Because freeze frame records the engine conditions when the malfunction is detected. When troubleshooting, it is useful for determining whether the vehicle was running or stopped, the engine was warmed up or not, the air-fuel ratio was lean or rich, etc. at the time of the malfunction.

1	Check voltage between terminal BATT of ECM connector and body ground.

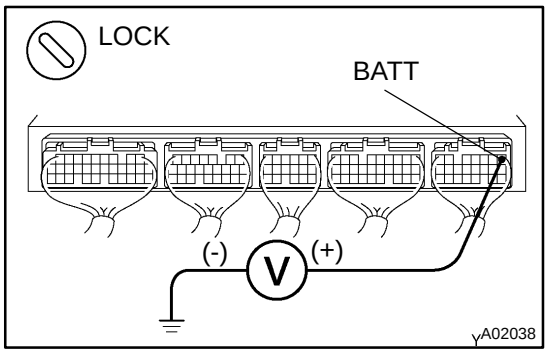

PREPARATION:
Remove the glove compartment (See page SF-82).
CHECK:
Measure the voltage between terminal BATT of the ECM connector and body ground.
OK:
Voltage: 9 - 14 V

OK	Check and replace ECM (See page IN-30).

NG

2	Check EFI No.1 fuse.

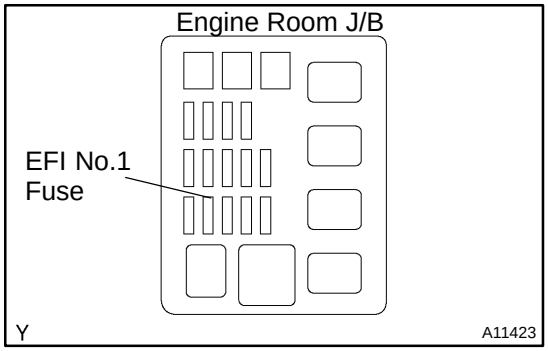

PREPARATION:
Remove the EFI No.1 fuse from the engine room J/B.
CHECK:
Check the continuity of the EFI No.1 fuse.
OK:
Continuity

NG	Check for short in all harness and components connected to EFI No.1 fuse.

OK

Check and repair harness or connector between battery and EFI No.1 fuse, and EFI No.1 fuse and ECM.

DI6TC-01

DTC	P1656	OCV Circuit Malfunction (bank 1)

DTC	P1663	OCV Circuit Malfunction (bank 2)

CIRCUIT DESCRIPTION

Refer to DTC P1349, P1354 on page DI-127 .

DTC No.	DTC Detecting Condition	Trouble Area
P1656 P1663	Open or short in oil control valve circuit	●Open or short in OCV circuit ●OCV ●ECM

WIRING DIAGRAM

Refer to DTC P1349, P1354 on page DI-127 .

INSPECTION PROCEDURE

HINT:

- If DTC P1656 dysplayed, check left bank OCV circuit.
- If DTC P1663 dysplayed, check right bank OCV circuit.
- Read freeze frame data using TOYOTA hand-held tester or OBD II scan tool. Because freeze frame records the engine conditions when the malfunction is detected. When troubleshooting, it is useful for determining whether the vehicle was running or stopped, the engine was warmed up or not, the air-fuel ratio was lean or rich, etc. at the time of the malfunction.

TOYOTA hand-held tester:

1	**Check OCV circuit.**

PREPARATION:

(a) Start the engine and warmed it up.

(b) Connect the TOYOTA hand-held tester and select the VVT from the ACTIVE TEST menu.

CHECK:

Check the engine speed when operate the OCV by the TOYOTA hand-held tester.

OK:

VVT system is OFF (OCV is OFF): Normal engine speed

VVT system is ON (OCV is ON): Rough idle or engine stalled

OK → **Check for intermittent problems (See page DI-3).**

NG

2	Check operation of OCV.

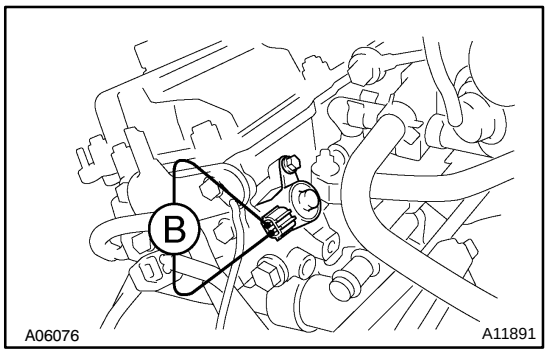

PREPARATION:

(a) Start the engine and warmed it up.
(b) Disconnect the OCV connector.
(c) Apply battery positive voltage between terminals of the OCV.

CHECK:

Check the engine speed.

OK:

Rough idle or engine stalled.

NG → **Replace OCV.**

OK ↓

3	Check voltage between terminals OCV+ and OCV- of ECM connector (See page DI-127 , step 3).

NG → **Check and replace ECM (See page IN-30).**

OK ↓

4	Check for open and short in harness and connector between OCV and ECM (See page IN-30).

NG → **Repair or replace.**

OK ↓

Check for intermittent problems (See page DI-3).

OBD II scan tool (excluding TOYOTA hand-held tester):

1	**Check operation of OCV.**

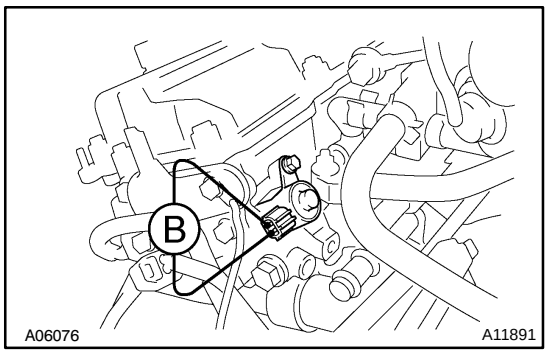

PREPARATION:

(a) Start the engine and warmed it up.
(b) Disconnect the OCV connector.
(c) Apply battery positive voltage between terminals of the OCV.

CHECK:

Check the engine speed.

OK:

Rough idle or engine stalled

NG → **Replace OCV.**

OK ↓

2	**Check voltage between terminals OCV+ and OCV- of ECM connector (See page DI-127 , step 3).**

NG → **Check and replace ECM (See page IN-30).**

OK ↓

3	**Check for open and short in harness and connector between OCV and ECM (See page IN-30).**

NG → **Repair or replace.**

OK ↓

Check for intermittent problems (See page DI-3).

DI08A-09

DTC	P1780	Park/Neutral Position Switch Malfunction

CIRCUIT DESCRIPTION

The park/neutral position switch go on when the shift lever is in the N or P shift position. When it goes on, terminal NSW of the ECM is grounded to body ground via the starter relay, thus the terminal NSW voltage becomes 0V. When the shift lever is in the D, 2, L or R position, the park/neutral position switch goes off, so the voltage of ECM. Terminal NSW becomes battery voltage, the voltage of the ECM internal power source. If the shift lever is moved from the N position to the D position, this signal is used for air-fuel ratio correction and for idle speed control (estimated control), etc.

DTC No.	DTC Detecting Condition	Trouble Area
P1780	When driving under conditions (a) and (b) for 30 sec. or more the park/neutral position switch is ON (N position): (2 trip detection logic) (a) Vehicle speed: 40 km/h (25 mph) or more (b) Engine speed: 1,500 - 4,000 rpm	●Short in park/neutral position switch circuit ●Park/neutral position switch ●ECM

HINT:

After confirming DTC P1780, use the TOYOTA hand-held tester to confirm the PNP switch signal from the CURRENT DATA.

WIRING DIAGRAM

Refer to DTC P1780 on page DI-199 .

INSPECTION PROCEDURE

Refer to DTC P1780 on page DI-199 .

HINT:

Read freeze frame data using TOYOTA hand-held tester or OBD II scan tool. Because freeze frame records the engine conditions when the malfunction is detected. When troubleshooting, it is useful for determining whether the vehicle was running or stopped, the engine was warmed up or not, the air-fuel ratio was lean or rich, etc. at the time of the malfunction.

DI6T4-03

DTC	P0171	System too Lean (Fuel Trim)

DTC	P0172	System too Rich (Fuel Trim)

DTC	P0174	System too Lean (A/F Lean Malfunction, Bank2)

DTC	P0175	System too Rich (Bank2)

CIRCUIT DESCRIPTION

Fuel trim refers to the feedback compensation value compared to the basic injection time. Fuel trim includes short-term fuel trim and long-term fuel trim.

Short-term fuel trim is the short-term fuel compensation used to maintain the air-fuel ratio at its ideal theoretical value.

The signal from the A/F sensor is approximately proportional to the existing air-fuel ratio, and ECM comparing it with the ideal theoretical value, the ECM reduces fuel volume immediately if the air-fuel ratio is rich and increases fuel volume if it is lean.

Long-term fuel trim compensates the deviation from the central value of the short-term fuel trim stored up by each engine tolerance, and the deviation from the central value due to the passage of time and changes of using environment.

If both the short-term fuel trim and long-term fuel trim exceed a certain value, it is detected as a malfunction and the MIL lights up.

DTC No.	DTC Detecting Condition	Trouble Area
P0171 P0174	When air-fuel ratio feedback is stable after engine warming up, fuel trim is considerably in error on rich side (2 trip detection logic)	●Air induction system ●Injector blockage ●Mass air flow meter ●Engine coolant temp. sensor ●Fuel pressure ●Gas leakage on exhaust system ●Open or short in A/F sensor (bank 1, 2 sensor 1) circuit ●A/F sensor (bank 1, 2 sensor 1) ●ECM
P0172 P0175	When air-fuel ratio feedback is stable after engine warming up, fuel trim is considerably in error on lean side (2 trip detection logic)	●Injector leak, blockage ●Mass air flow meter ●Engine coolant temp. sensor ●Ignition system ●Fuel pressure ●Gas leakage on exhaust system ●Open or short in A/F sensor (bank 1, 2 sensor 1) circuit ●A/F sensor (bank 1, 2 sensor 1) ●ECM

HINT:

- When the DTC P0171 or P0174 is recorded, the actual air-fuel ratio is on the lean side. When DTC P0172 or P0175 is recorded, the actual air-fuel ratio is on the rich side.
- If the vehicle runs out of fuel, the air-fuel ratio is lean and DTC P0171 or P0174 is recorded. The MIL then comes on.
- If the total of the short-term fuel trim value and the long-term fuel trim value is within ± 35 % (80˚C (176˚F) or more), the system is functioning normally.
- The A/F sensors (bank 1, 2 sensor 1) output voltage and the short-term fuel trim value can be read using the OBD II scan tool or hand-held tester.
- The ECM controls the voltage of AFR+, AFL+, AFR- and AFL- terminals of ECM to the fixed voltage. Therefore, it is impossible to confirm the A/F sensor output voltage without OBD II scan tool or hand-held tester.
- OBD II scan tool (excluding hand-held tester) displays the one fifth of the A/F sensors (bank 1, 2 sensor 1) output voltage which is displayed on the hand-held tester.

WIRING DIAGRAM

Refer to DTC P0125 on page DI-43 .

INSPECTION PROCEDURE

HINT:

Read freeze frame data using TOYOTA hand-held tester or OBD II scan tool. Because freeze frame records the engine conditions when the malfunction is detected. When troubleshooting, it is useful for determining whether the vehicle was running or stopped, the engine was warmed up or not, the air-fuel ratio was lean or rich, etc. at the time of the malfunction.

1	**Check air induction system (See page SF-1).**

NG → **Repair or replace.**

OK

2	**Check injector injection (See page SF-23).**

NG → **Replace injector.**

OK

3	Check mass air flow meter (See page SF-31) and engine coolant temperature sensor (See page SF-73).

NG → Repair or replace.

OK

4	Check for spark and ignition (See page IG-1).

NG → Repair or replace.

OK

5	Check fuel pressure (See page SF-6).

NG → Check and repair fuel pump, pressure regulator, fuel pipe line and filter.

OK

6	Check gas leakage on exhaust system.

NG → Repair or replace.

OK

7	**Check output voltage A/F sensor (bank 1, 2 sensor 1).**

PREPARATION:

(a) Connect the OBDII scan tool or TOYOTA hand-held tester to the DLC3.

(b) Warm up the A/F sensor with the engine speed at 2,500 rpm for approx. 90 sec.

CHECK:

Read the voltage value of the A/F sensor on the screen of OBDII scan tool or TOYOTA hand-held tester when you perform all the following conditions.

HINT:

The voltage of the AFR+ or AFL+ terminal of the ECM is 3.3 fixed the AFR- or AFL- terminal is 3.0 V fixed. Therefore, it is impossible to check the A/F sensor output voltage at the terminals (AFR+, AFL+/AFR-, AFL-) of the ECM.

OK:

Condition	A/F Sensor Voltage value
Engine idling	●Not remains at 3.30 V (0.660 V*) ●Not remains at 3.8 V (0.76 V*) or more ●Not remains at 2.8 V (0.56 V*) or less *: When you use OBDII scan tool (excluding TOYOTA hand-held tester)
Engine racing	
Driving at engine speed 1,500 rpm or more and vehicle speed 40 km/h (25mph) or more, and operate throttle valve open and close	

HINT:

- During fuel enrichment, there is a case that the output voltage of the A/F sensor is below 2.8 V (0.56 V*), it is normal.
- During fuel cut, there is a case that the output voltage of the A/F sensor is above 3.8 V (0.76 V*), it is normal.
- If the output voltage of the A/F sensor remains at 3.30 V (0.660 V*) even after performing all the above conditions, the A/F sensor circuit may be open.
- If the output voltage of the A/F sensor remains at 3.8 V (0.76 V*) or more, or 2.8 V (0.56 V*) or less even after performing all the above conditions, the A/F sensor circuit may be short.

*: When you use the OBDII scan tool (excluding TOYOTA hand-held tester).

OK	**Go to step 9.**

NG

8	Check for open and short in harness and connector between ECM and A/F sensors (bank 1, 2 sensor 1) (See page IN-30).

NG → Repair or replace harness or connector.

OK ↓

Replace A/F sensor.

9	Perform confirmation driving pattern (See page DI-106).

Go ↓

10	Is there DTC P0171, P0172, P0174 or P0175 being output again?

YES → Check and replace ECM (See page IN-30).

NO ↓

11	Did vehicle runs out of fuel in past?

NO → Check for intermittent problems (See page DI-3).

YES ↓

DTC P0171, P0172, P0174 or P0175 is caused by running out of fuel.

DI08B-09

Starter Signal Circuit

CIRCUIT DESCRIPTION

When the engine is cranked, the intake air flow is slow, so fuel vaporization is poor. A rich mixture is therefore necessary in order to achieve good startability. While the engine is being cranked, the battery positive voltage is applied to terminal STA of the ECM. The starter signal is mainly used to increase the fuel injection volume for the starting injection control and after-start injection control.

WIRING DIAGRAM

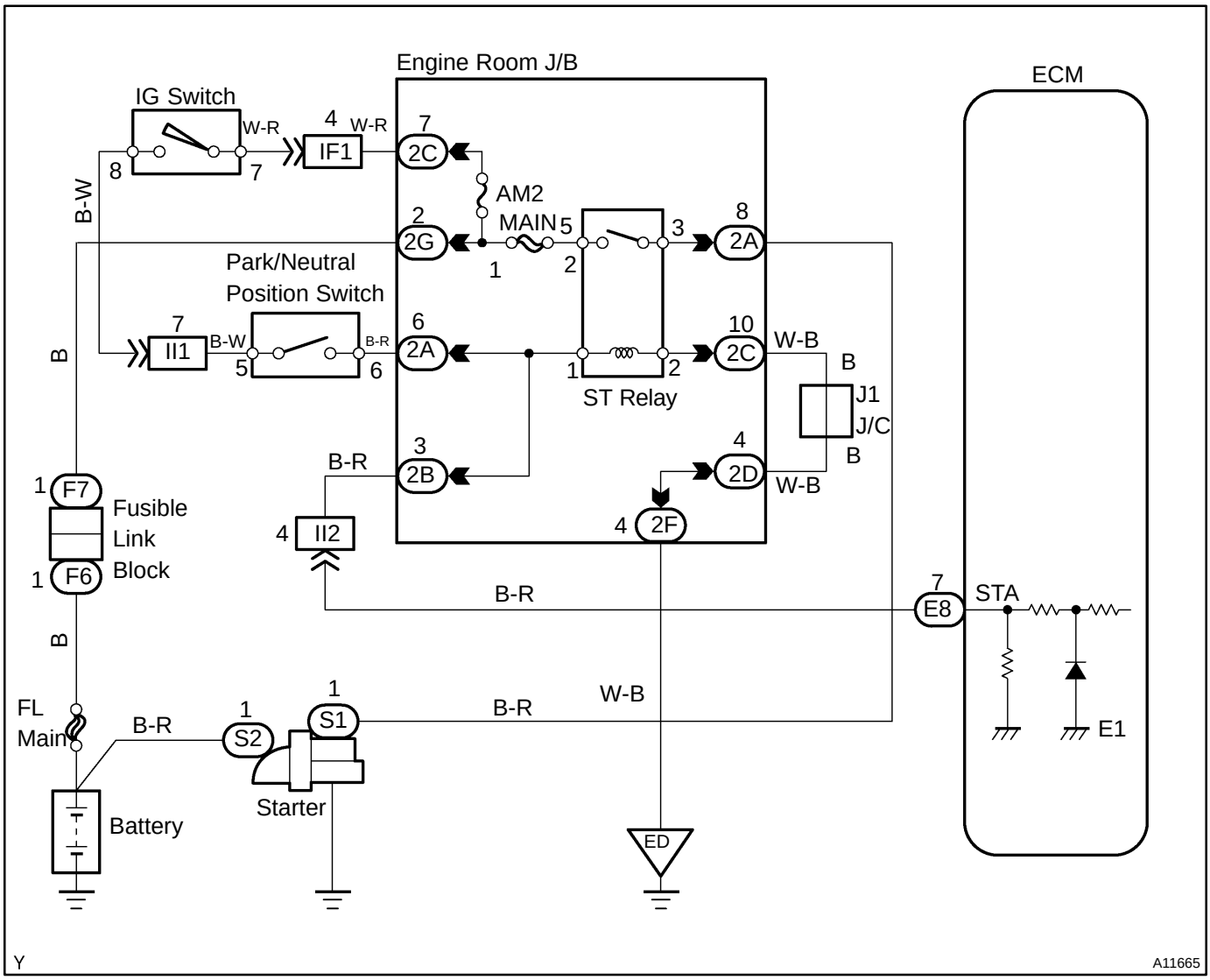

INSPECTION PROCEDURE

HINT:

This diagnostic chart is based on the premise that the engine is cranked normally. If the engine is not cranked, proceed to the problem symptoms table on page DI-22 .

TOYOTA hand-held tester:

1	**Connect TOYOTA hand-held tester, and check STA signal.**

PREPARATION:

(a) Connect the TOYOTA hand-held tester to the DLC3.

(b) Turn the ignition switch ON and push the TOYOTA hand-held tester main switch ON.

CHECK:

Read the STA signal on the TOYOTA hand-held tester while the starter operates.

OK:

Ignition Switch Position	ON	START
STA Signal	OFF	ON

OK → **Proceed to next circuit inspection shown on problem symptom table (See page DI-22).**

NG

2	**Check for open in harness and connector between ECM and starter relay (Marking: ST) (See page IN-30).**

NG → **Repair or replace harness or connector.**

OK

Check and replace ECM (See page IN-30).

OBD II scan tool (excluding TOYOTA hand-held tester):

1	**Check voltage between terminal STA of ECM connector and body ground.**

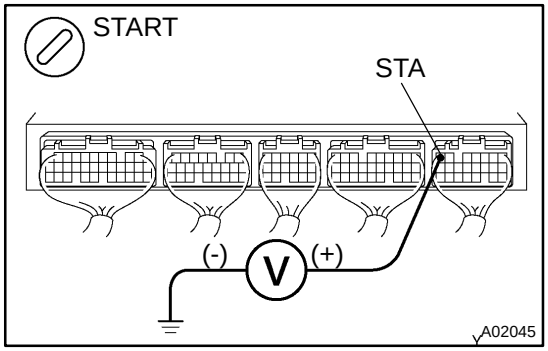

PREPARATION:

Remove the glove compartment (See page SF-83).

CHECK:

Measure the voltage between terminal STA of the ECM connector and body ground during the engine cranking.

OK:

Voltage: 6 V or more

OK → **Proceed to next circuit inspection shown on problem symptom table (See page DI-22).**

NG

2	Check for open in harness and connector between ECM and starter relay (Marking: ST) (See page IN-30).

NG → Repair or replace harness or connector.

OK

Check and replace ECM (See page IN-30).

DI079-04

CUSTOMER PROBLEM ANALYSIS CHECK

ENGINE CONTROL SYSTEM Check Sheet

Inspector's Name _____

Customer's Name		Model and Model Year	
Driver's Name		Frame No.	
Date Vehicle Brought in		Engine Model	
License No.		Odometer Reading	km miles

Problem Symptoms	☐ Engine does not Start	☐ Engine does not crank ☐ No initial combustion ☐ No complete combustion
	☐ Difficult to Start	☐ Engine cranks slowly ☐ Other _____
	☐ Poor Idling	☐ Incorrect first idle ☐ Idling rpm is abnormal ☐ High (rpm) ☐ Low (rpm) ☐ Rough idling ☐ Other _____
	☐ Poor Driveability	☐ Hesitation ☐ Back fire ☐ Muffler explosion (after-fire) ☐ Surging ☐ Knocking ☐ Other _____
	☐ Engine Stall	☐ Soon after starting ☐ After accelerator pedal depressed ☐ After accelerator pedal released ☐ During A/C operation ☐ Shifting from N to D ☐ Other _____
	☐ Others	

Dates Problem Occurred		
Problem Frequency		☐ Constant ☐ Sometimes (times per day/month) ☐ Once only ☐ Other _____
Condition When Problem Occurs	Weather	☐ Fine ☐ Cloudy ☐ Rainy ☐ Snowy ☐ Various/Other _____
	Outdoor Temperature	☐ Hot ☐ Warm ☐ Cool ☐ Cold (approx. ____°F/____°C)
	Place	☐ Highway ☐ Suburbs ☐ Inner city ☐ Uphill ☐ Downhill ☐ Rough road ☐ Other _____
	Engine Temperature	☐ Cold ☐ Warming up ☐ After warming up ☐ Any temperature ☐ Other _____
	Engine Operation	☐ Starting ☐ Just after starting (min.) ☐ Idling ☐ Racing ☐ Driving ☐ Constant speed ☐ Acceleration ☐ Deceleration ☐ A/C switch ON/OFF ☐ Other _____

Condition of MIL		☐ Remains on	☐ Sometimes light up ☐ Does not light up
DTC Inspection	Normal Mode (Precheck)	☐ Normal	☐ Malfunction code(s) (code) ☐ Freezed frame data ( )
	Check Mode	☐ Normal	☐ Malfunction code(s) (code) ☐ Freezed frame data ( )

DI07B-20

DIAGNOSTIC TROUBLE CODE CHART

HINT:

Parameters listed in the chart may not be exactly the same as your reading due to the type of instrument or other factors.¿

If a malfunction code is displayed during the DTC check in check mode, check the circuit for the codes listed in the table below. For details of each code, turn to the page referred to under the ”See page ” for the respective ”DTC No.” in the DTC chart.

SAE CONTROLLED

DTC No. (See page)	Detection Item	Trouble Area	MIL*1	Memory
P0100 (DI-23)	Mass Air Flow Circuit Malfunction	□Open or short in mass air flow meter circuit □Mass air flow meter □ECM	○	○
P0101 (DI-27)	Mass Air Flow Circuit Range/ Performance Problem	□Mass air flow meter	○	○
P0110 (DI-28)	Intake Air Temp. Circuit Malfunction	□Open or short in intake air temp. sensor circuit □Intake air temp. sensor (built into mass air flow meter) □ECM	○	○
P0115 (DI-32)	Engine Coolant Temp. Circuit Malfunction	□Open or short in engine coolant temp. sensor circuit □Engine coolant temp. sensor □ECM	○	○
P0116 (DI-36)	Engine Coolant Temp. Circuit Range/Performance Problem	□Cooling system □Engine coolant temp. sensor	○	○
P0120 (DI-38)	Throttle/Pedal Position Sensor/ Switch ”A” Circuit Malfunction	□Open or short in throttle position sensor circuit □Throttle position sensor □ECM	○	○
P0121 (DI-42)	Throttle/Pedal Position Sensor/ Switch ”A” Circuit Range/Performance Problem	□Throttle position sensor	○	○
P0125 (DI-43)	Insufficient Coolant Temp. for Closed Loop Fuel Control	□Open or short in A/F sensor (bank 1, 2 sensor 1) circuit □A/F sensor (bank 1, 2 sensor 1) □Air induction system □Fuel pressure □Injector □Gas leakage on exhaust system □ECM	○	○
P0128 (DI-48)	Thermostat Malfunction	□Thermostat □Cooling system □Engine coolant temp. sensor □ECM	¿	¿
P0136 (DI-49)	Oxygen Sensor Circuit Malfunction (Bank 1 Sensor 2)	□Open or short in heated oxygen sensor circuit □Heated oxygen sensor	○	○
P0141 (DI-51)	Oxygen Sensor Heater Circuit Malfunction (Bank 1 Sensor 2)	□Open or short in heater circuit of heated oxygen sensor □Heated oxygen sensor heater □ECM	○	○

P0171 (DI-53)	System too Lean (Fuel Trim)	□Air induction system □Injector blockage □Mass air flow meter □Engine coolant temp. sensor □Fuel pressure □Gas leakage on exhaust system □Open or short in A/F sensor (bank 1, 2 sensor 1) circuit □A/F sensor (bank 1, 2 sensor 1) □ECM	○	○
P0172 (DI-53)	System too Rich (Fuel Trim)	□Injector leak, blockage □Mass air flow meter □Engine coolant temp. sensor □Ignition system □Fuel pressure □Gas leakage on exhaust system □Open or short in A/F sensor (bank 1, 2 sensor 1) circuit □A/F sensor (bank 1, 2 sensor 1) □ECM	○	○
P0174 (DI-53)	System too Lean (A/F Lean Malfunction)	□Same as DTC P0171	○	○
P0175 (DI-53)	System too Rich (A/F Rich Malfunction)	□Same as DTC P0172	○	○
P0300 (DI-58)	Random/Multiple Cylinder Misfire Detected	□Open or short in engine wire □Connector connection □Vacuum hose connection □Ignition system □Injector □Fuel pressure □Mass air flow meter □Engine coolant temp. sensor □Compression pressure □Valve clearance □Valve timing □ECM	○*2	○
P0301 (DI-58)	Cylinder 1 Misfire Detected			
P0302 (DI-58)	Cylinder 2 Misfire Detected			
P0303 (DI-58)	Cylinder 3 Misfire Detected			
P0304 (DI-58)	Cylinder 4 Misfire Detected			
P0305 (DI-58)	Cylinder 5 Misfire Detected			
P0306 (DI-58)	Cylinder 6 Misfire Detected			
P0325 (DI-64)	Knock Sensor 1 Circuit Malfunction (Bank 1)	□Open or short in knock sensor 1 circuit □Knock sensor 1 (looseness) □ECM	○	○
P0330 (DI-64)	Knock Sensor 2 Circuit Malfunction (Bank 2)	□Open or short in knock sensor 2 circuit □Knock sensor 2 (looseness) □ECM	○	○
P0335 (DI-67)	Crankshaft Position Sensor "A" Circuit Malfunction	□Open or short in crankshaft position sensor circuit □Crankshaft position sensor □Crankshaft timing pulley □ECM	○	○
P0340 (DI-69)	Camshaft Position Sensor Circuit Malfunction	□Open or short in camshaft position sensor circuit □Camshaft position sensor □Camshaft timing gear □ECM	○	○
P0420 (DI-71)	Catalyst System Efficiency Below Threshold (Bank 1)	□Gas leakage on exhaust system □A/F sensor (bank 1, 2 sensor 1) □Heated oxygen sensor (bank 1 sensor 2) □Three-way catalytic converter	○	○

P0440 (DI-74)	Evaporative Emission Control System Malfunction	□Hose or tube cracked, holed, damaged or insufficient seal □Fuel tank cap incorrectly installed □Fuel tank cap cracked or damaged □Vacuum hose cracked, holed, blocked, damaged or disconnected □Fuel tank cracked, holed or damaged □Charcoal canister cracked, holed or damaged □Open or short in vapor pressure sensor circuit □Vapor pressure sensor □Fuel tank over fill check valve cracked or damaged □ECM	○	○
P0441 (DI-80)	Evaporative Emission Control System Incorrect Purge Flow	□Vacuum hose cracked, holed blocked, damaged or disconnected ((1), (2), (3), (4), (5), (6), (7), (8), (9), (10) and (11) in Fig. 1) □Fuel tank cap incorrectly installed □Fuel tank cap cracked or damaged □Open or short in vapor pressure sensor circuit □Vapor pressure sensor □Open or short in VSV circuit for EVAP □VSV for EVAP □Open or short in VSV circuit for CCV □VSV for CCV □Open or short in VSV circuit for pressure switching valve □VSV for pressure switching valve □Fuel tank cracked, holed or damaged □Charcoal canister cracked, holed or damaged □Fuel tank over fill check valve cracked or damaged □ECM	○	○
P0442 (DI-74)	Evaporative Emission Control System Leak Detected (Small Leak)	□Same as DTC No. P0440	○	○
P0446 (DI-80)	Evaporative Emission Control System Vent Control Malfunction	□Same as DTC No. P0441	○	○
P0450 (DI-97)	Evaporative Emission Control System Pressure Sensor Malfunction	□Open or short in vapor pressure sensor circuit □Vapor pressure sensor □ECM	○	○
P0451 (DI-97)	Evaporative Emission Control System Pressure Sensor Range/ Performance			
P0500 (DI-99)	Vehicle Speed Sensor Malfunction	□Combination meter □Open or short in speed sensor circuit □ECM	○	○
P0505 (DI-102)	Idle Control System Malfunction	□Open or short in IAC valve circuit □IAC valve is stuck or closed □Open or short in A/C signal circuit □Air induction system □ECM	○	○

*1: MIL lights up
*2: MIL light up or blinking

MANUFACTURER CONTROLLED

DTC No. (See page)	Detection Item	Trouble Area	MIL*	Memory
P1130 (DI-106)	A/F Sensor Circuit Range/Performance Malfunction (Bank 1 Sensor 1)	□Open or short in A/F sensor circuit □A/F sensor □Air induction system □Fuel pressure □Injector □ECM	○	○
P1133 (DI-111)	A/F Sensor Circuit Response Malfunction (Bank 1 Sensor 1)	□Open or short in A/F sensor circuit □A/F sensor □Air induction system □Fuel pressure □Injector □ECM	○	○
P1135 (DI-115)	A/F Sensor Heater Circuit Malfunction (Bank 1 Sensor 1)	□Open or short in heater circuit of A/F sensor □A/F sensor heater □ECM	○	○
P1150 (DI-106)	A/F Sensor Circuit Range/Performance Malfunction (Bank 2 Sensor 1)	□Same as DTC No. P1130	○	○
P1153 (DI-111)	A/F Sensor Circuit Response Malfunction (Bank 2 Sensor 1)	□Same as DTC No. P1133	○	○
P1155 (DI-115)	A/F Sensor Heater Circuit Malfunction (Bank 2 Sensor 1)	□Same as DTC No. P1135	○	○
P1300 (DI-117)	Igniter Circuit Malfunction (No.1)	□Ignition system □Open or short in IGF1 or IGT1 circuit from No.1 ignition coil with igniter to ECM □No.1 ignition coil with igniter □ECM	○	○
P1305 (DI-117)	Igniter Circuit Malfunction (No.2)	□Ignition system □Open or short in IGF2 or IGT2 circuit from No.2 ignition coil with igniter to ECM □No.2 ignition coil with igniter □ECM	○	○
P1310 (DI-117)	Igniter Circuit Malfunction (No.3)	□Ignition system □Open or short in IGF2 or IGT3 circuit from No.3 ignition coil with igniter to ECM □No.3 ignition coil with igniter □ECM	○	○
P1315 (DI-117)	Igniter Circuit Malfunction (No.4)	□Ignition system □Open or short in IGF1 or IGT4 circuit from No.4 ignition coil with igniter to ECM □No.4 ignition coil with igniter □ECM	○	○
P1320 (DI-117)	Igniter Circuit Malfunction (No.5)	□Ignition system □Open or short in IGF2 or IGT5 circuit from No.5 ignition coil with igniter to ECM □No.5 ignition coil with igniter □ECM	○	○
P1325 (DI-117)	Igniter Circuit Malfunction (No.6)	□Ignition system □Open or short in IGF1 or IGT6 circuit from No.6 ignition coil with igniter to ECM □No.6 ignition coil with igniter □ECM	○	○

P1335 (DI-123)	Crankshaft Position Sensor Circuit Malfunction (During engine running)	□Open or short in crankshaft position sensor circuit □Crankshaft position sensor □Camshaft timing gear □ECM	-	○
P1345 (DI-111)	VVT Sensor/Camshaft position Sensor Circuit Malfunction (Bank 1)	□Open or short in VVT sensor (camshaft position Sensor) circuit □VVT sensor (camshaft position Sensor) □ECM	○	○
P1346 (DI-126)	VVT Sensor/Camshaft position Sensor Circuit Range/Performance Problem (Bank 1)	□Mechanical system (Jumping teeth of timing belt, belt stretched) □ECM	○	○
P1349 (DI-127)	VVT System Malfunction (Bank 1)	□Valve timing □OCV □VVT controller assembly □ECM	○	○
P1350 (DI-124)	VVT Sensor/Camshaft position Sensor Circuit Malfunction (Bank 2)	□Same as DTC No. P1345	○	○
P1351 (DI-126)	VVT Sensor/Camshaft position Sensor Circuit Range/Performance Problem (Bank 2)	□Same as DTC No. P1346	○	○
P1354 (DI-127)	VVT System Malfunction (Bank 2)	□Same as DTC No. P1349	○	○
P1520 (DI-134)	Stop Light Switch Signal Malfunction	□Short in stop light switch signal circuit □Stop light switch □ECM	○	○
P1600 (DI-136)	ECM BATT Malfunction	□Open in back up power source circuit □ECM	○	○
P1656 (DI-138)	OCV Circuit Malfunction (Bank 1)	□Open or short in OCV circuit □OCV □ECM	○	○
P1663 (DI-138)	OCV Circuit Malfunction (Bank 2)			
P1780 (DI-141)	Park/Neutral Position Switch Malfunction	□Short in park/neutral position switch circuit □Park/neutral position switch □ECM	○	○
B2795 (DI-605)	Unmatched Key Code	□Immobiliser system	-	○
B2796 (DI-606)	No Communication in Immobiliser System	□Immobiliser system	-	○
B2797 (DI-609)	Communication Malfunction No.1	□Immobiliser system	-	○

*: ○ ≤≤≤MIL lights up. - ≤≤≤MIL does not light up.

ENGINE

DI078-07

HOW TO PROCEED WITH TROUBLESHOOTING

Troubleshoot in accordance with the procedure on the following page.

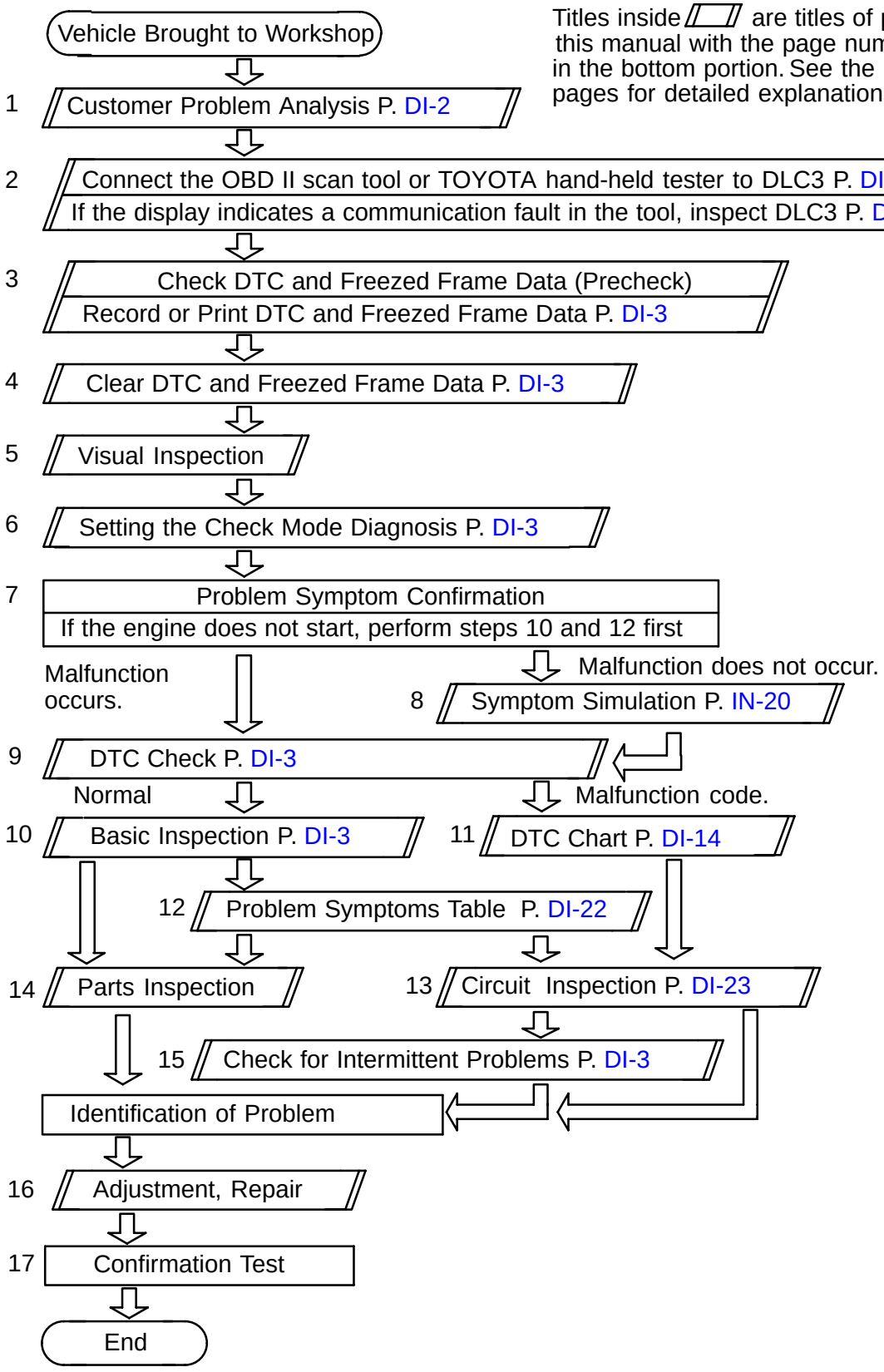

Titles inside ▱ are titles of pages in this manual with the page number indicated in the bottom portion. See the indicated pages for detailed explanations.

DI07C-09

PARTS LOCATION

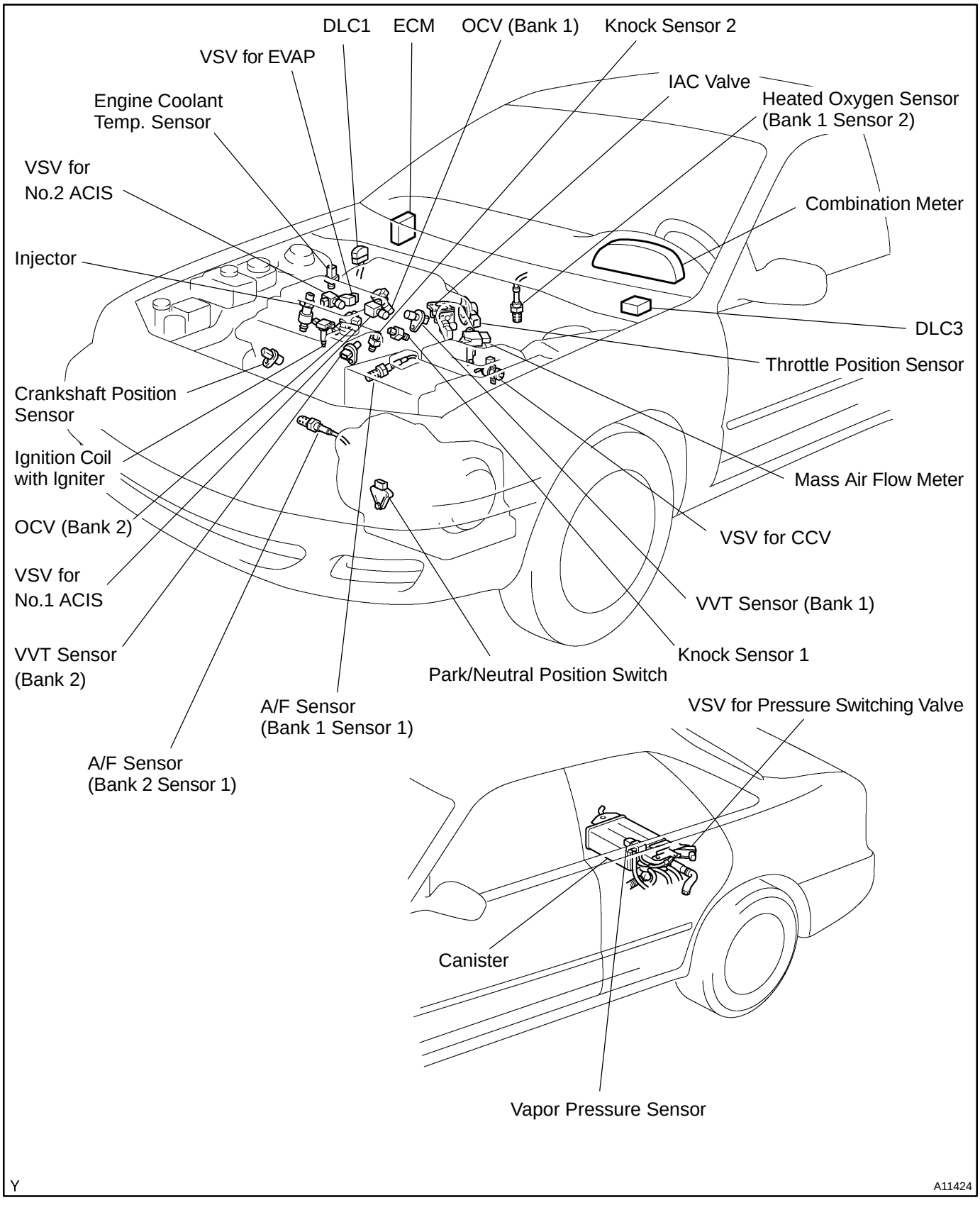

DI07A-09

PRE-CHECK

1. DIAGNOSIS SYSTEM

(a) Description

- When troubleshooting OBD II vehicles, the only difference from the usual troubleshooting procedure is that you connect the vehicle to the OBD II scan tool complying with SAE J1978 or TOYOTA hand-held tester, and read off various data output from the vehicle's ECM.

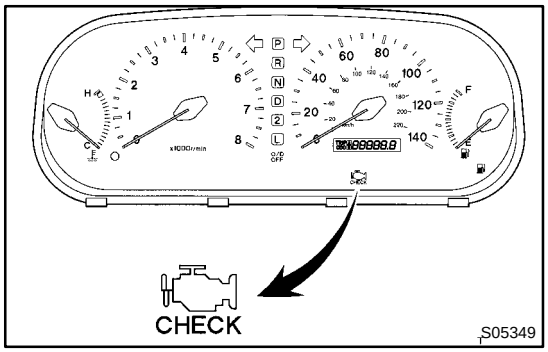

- OBD II regulations require that the vehicle's on-board computer lights up the Malfunction Indicator Lamp (MIL) on the instrument panel when the computer detects a malfunction in the emission control system/components or in the powertrain control components which affect vehicle emissions, or a malfunction in the computer. In addition to the MIL lighting up when a malfunction is detected, the applicable Diagnostic Trouble Codes (DTCs) prescribed by SAE J2012 are recorded in the ECM memory (See page DI-14).

If the malfunction does not reoccur in 3 consecutive trips, the MIL goes off automatize but the DTC remain recorded in the ECM memory.

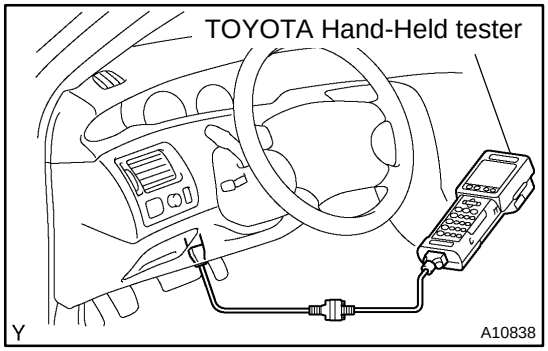

- To check the DTC, connect the OBD II scan tool or TOYOTA hand-held tester to the Data Link Connector 3 (DLC3) on the vehicle. The OBD II scan tool or TOYOTA hand-held tester also enables you to erase the DTC and check freezed frame data and various forms of engine data (For operating instructions, see the OBD II scan tool's instruction book.). DTC include SAE controlled codes and manufacturer controlled codes. SAE controlled codes must be set as prescribed by the SAE, while manufacturer controlled codes can be set freely by the manufacturer within the prescribed limits (See DTC chart on page DI-14).

- The diagnosis system operates in normal mode during normal vehicle use. It also has a check mode for technicians to simulate malfunction symptoms and troubleshoot. Most DTC use 2 trip detection logic* to prevent erroneous detection, and ensure thorough malfunction detection. By switching the ECM to check mode when troubleshooting, the technician can cause the MIL to light up for a malfunction that is only detected once or momentarily (TOYOTA hand-held tester only). (See step 2)
- *2 trip detection logic:
  When a malfunction is first detected, the malfunction is temporarily stored in the ECM memory. (1st trip)

If the same malfunction is detected again during the second drive test, this second detection causes the MIL to light up. (2nd trip) the 2 trip repeats the same mode a 2nd time (However, the ignition switch must be turned OFF between the 1st trip and 2nd trip.).

- Freeze frame data:
  Freeze frame data records the engine condition when a misfire (DTCs P0300 - P0306) or fuel trim malfunction (DTCs P0171 and P0172) or other malfunction (first malfunction only), is detected. Because freeze frame data records the engine conditions (fuel system, calculated load, engine coolant temperature, fuel trim, engine speed, vehicle speed, etc.) when the malfunction is detected. When troubleshooting, it is useful for determining whether the vehicle was running or stopped, the engine was warmed up or not, the air-fuel ratio was lean or rich, etc. at the time of the malfunction.

Priorities for troubleshooting:

If troubleshooting priorities for multiple DTCs are given in the applicable DTC chart, these should be followed.

If no instructions are given, troubleshoot DTCs according to the following priorities.

(1) DTC other than fuel trim malfunction (DTCs P0171 and P0172), and misfire (DTCs P0300 - P0306).
(2) Fuel trim malfunction (DTCs P0171 and P0172).
(3) Misfire (DTCs P0300 - P0306).

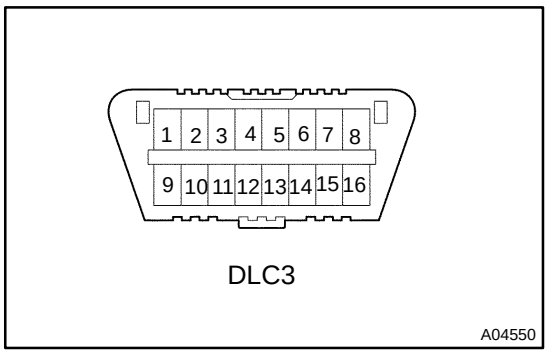

(b) Check the DLC3.
The vehicle's ECM uses ISO 9141-2 for communication. The terminal arrangement of DLC3 complies with SAE J1962 and matches the ISO 9141-2 format.

Terminal No.	Connection/Voltage or Resistance	Condition
7	Bus > Line/Pulse generation	During transmission
4	Chassis Ground ↔ Body Ground/1 Ω or less	Always
5	Signal Ground ↔ Body Ground/1 Ω or less	Always
16	Battery Positive ↔ Body Ground/9 - 14 V	Always

HINT:
If your display shows UNABLE TO CONNECT TO VEHICLE when you have connected the cable of the OBD II scan tool or TOYOTA hand-held tester to the DLC3, turned the ignition switch ON and operated the scan tool, there is a problem on the vehicle side or tool side.

- If communication is normal when the tool is connected to another vehicle, inspect the DLC3 on the original vehicle.
- If communication is still not possible when the tool is connected to another vehicle, the problem is probably in the tool itself, so consult the Service Department listed in the tool's instruction manual.

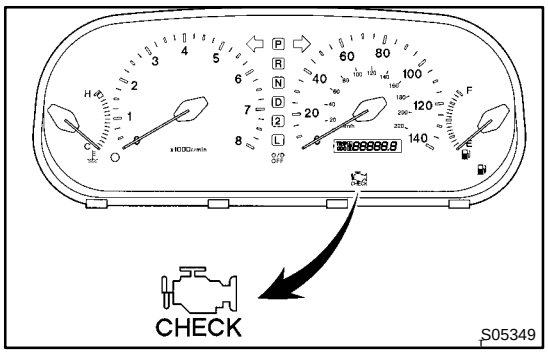

2. INSPECT DIAGNOSIS (Normal Mode)

(a) Check the MIL.

(1) The MIL comes on when the ignition switch is turned ON and the engine is not running.

HINT:
If the MIL does not light up, troubleshoot the combination meter (See page BE-53).

(2) When the engine started, the MIL should go off. If the lamp remains on, the diagnosis system has detected a malfunction or abnormality in the system.

(b) Check the DTC.

NOTICE:

- **If there is no DTC in the normal mode, check the 1st trip DTC using Continuous Test Results function (Mode 7 for SAE J1979) or the OBD II scan tool or TOYOTA hand-held tester.**

- **TOYOTA hand-held tester only:**
  When the diagnosis system is switched from the normal mode to the check mode, it erases all DTC and freezed frame data recorded in the normal mode. So before switching modes, always check the DTC and freezed frame data, and note them down.
  (1) Prepare the OBD II scan tool (complying with SAE J 1978) or TOYOTA hand-held tester.
  (2) Connect the OBD II scan tool or TOYOTA hand-held tester to the DLC3 at the lower center of the instrument panel.
  (3) Turn the ignition switch ON and push the OBD II scan tool or TOYOTA hand-held tester switch ON.
  (4) Use the OBD II scan tool or TOYOTA hand-held tester to check the DTC and freezed frame data and note them down (For operating instructions, see the OBD II scan tool's instruction book.).
  If there is no DTC in the normal mode, check the 1st trip DTC using Continuous Test Results function (Mode 7 for SAE J1979) on the OBD II scan tool or TOYOTA hand-held tester.
  (5) See page DI-14 to confirm the details of the DTC.

NOTICE:

- **When simulating symptoms with an OBD II scan tool (excluding TOYOTA hand-held tester) to check the DTC, use the normal mode. For code on the DTC chart subject to "2 trip detection logic", perform the following either action.**
- **Turn the ignition switch OFF after the symptom is simulated the 1st time. Then repeat the simulation process again. When the problem has been simulated twice, the MIL lights up and the DTCs are recorded in the ECM.**
- **Check the 1st trip DTC using Mode 7 (Continuous Test Results) for SAE J1979.**

(c) Clear the DTC.
The DTCs and freezed frame data will be erased by either action.

- Operating the OBD II scan tool (complying with SAE J1978) or TOYOTA hand-held tester to erase the codes. (See the OBD II scan tool's instruction book for operating instructions.)
- Disconnecting the battery terminals or EFI fuse.

NOTICE:
If the TOYOTA hand-held tester switches the ECM from the normal mode to the check mode or vice-versa, or if the ignition switch is turned from ON to ACC or OFF during the check mode, the DTCs and freezed frame data will be erased.

3. INSPECT DIAGNOSIS (Check Mode)

HINT:

TOYOTA hand-held tester only:

Compared to the normal mode, the check mode has an increased sensitivity to detect malfunctions.

Furthermore, the same diagnostic items which are detected in the normal mode can also be detected in the check mode.

Check the DTC.

(1) Initial conditions.
- Battery positive voltage 11 V or more
- Throttle valve fully closed
- Transmission in P or N position
- A/C switched OFF

(2) Turn the ignition switch OFF.

(3) Prepare the TOYOTA hand-held tester.

(4) Connect the TOYOTA hand- held tester to the DLC3 at the lower center of the instrument panel.

(5) Turn the ignition switch ON and push the TOYOTA hand-held tester switch ON.

(6) Switch the TOYOTA hand-held tester from the normal mode to the check mode (Check that the MIL flashes.).

NOTICE:
If the TOYOTA hand-held tester switches the ECM from the normal mode to the check mode or vice-versa, or if the ignition switch is turned from ON to ACC or OFF during the check mode, the DTC and freezed frame data will be erased.

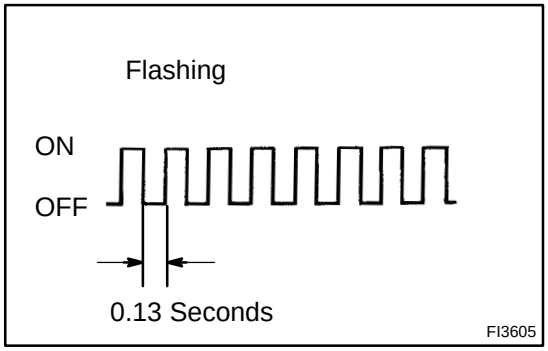

(7) Start the engine (The MIL goes out after the engine start.).

(8) Simulate the conditions of the malfunction described by the customer.

NOTICE:
Leave the ignition switch ON until you have checked the DTC, etc.

(9) After simulating the malfunction conditions, use the TOYOTA hand-held tester diagnosis selector to check the DTC and freezed frame data, etc.

HINT:
Take care not to turn the ignition switch OFF. Turning the ignition switch OFF switches the diagnosis system from the check mode to the normal mode, so all DTC, etc. are erased.

(10) After checking the DTC, inspect the applicable circuit.

4. FAIL-SAFE CHART

If any of the following codes is recorded, the ECM enters fail-safe mode.

DTC No.	Fail-Safe Operation	Fail-Safe Deactivation Conditions
P0100	Ignition timing fixed at 10° BTDC	Returned to normal condition
P0110	Intake air temp. is fixed at 20°C (68°F)	Returned to normal condition
P0115	Engine coolant temp. is fixed at 80°C (176°F)	Returned to normal condition
P0120	VTA is fixed at 0°	The following condition must be repeated at least 2 times consecutively 0.1 V ≦ VTA ≦ 0.95 V, SPD = 0 km/h
P0135 P0141 P0155 P1135 P1155	The heater circuit in witch an abnormality is detected is turned off	Ignition switch OFF
P0325 P0330	Max. timing retardation	Ignition switch OFF
P1300	Fuel cut	Returned to normal condition

5. CHECK FOR INTERMITTENT PROBLEMS

TOYOTA hand-held tester only:
By putting the vehicle's ECM in the check mode, 1 trip detection logic is possible instead of 2 trip detection logic and sensitivity to detect open circuits is increased. This makes it easier to detect intermittent problems.

(1) Clear the DTC (See step 2).
(2) Set the check mode (See step 3).
(3) Perform a simulation test (See page IN-20).
(4) Check the connector and terminal (See page IN-30).
(5) Handle the connector (See page IN-30).

6. BASIC INSPECTION

When the malfunction code is not confirmed in the DTC check, troubleshooting should be performed in order for all possible circuits to be considered as the cause of the problems. In many cases, by carrying out the basic engine check shown in the following flow chart, the location causing the problem can be found quickly and efficiently. Therefore, use of this check is essential in engine troubleshooting.

1	**Is battery positive voltage 11 V or more when engine is stopped?**

NO → **Charge or replace battery.**

YES

2	**Is engine cranked?**

NO	**Proceed to page ST-18 , and continue to trouble-shoot.**

YES

3	**Does engine start?**

NO	**Go to step 7.**

YES

4	**Check air filter.**

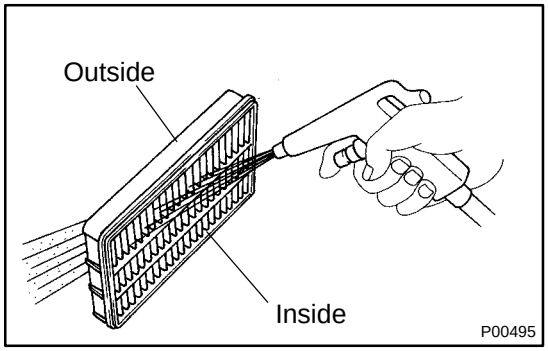

PREPARATION:
Remove the air filter.
CHECK:
Visually check that the air filter is not dirty or excessive oily.
HINT:
If necessary, clean the air filter with compressed air. First blow from inside thoroughly, then blow from outside of the air filter.

NG	**Repair or replace.**

OK

5	**Check idle speed.**

PREPARATION:
(a) Warm up the engine to normal operating temperature.
(b) Switch off all the accessories.
(c) Switch off the A/C.
(d) Shift the transmission into the N position.
(e) Connect the OBD II scan tool or TOYOTA hand-held tester to the DLC3 on the vehicle.

CHECK:
Use the CURRENT DATA to check the idle speed.

OK:
Idle speed: 650 - 750 rpm

NG	**Proceed to problem symptoms table on page DI-22 .**

OK

6	Check ignition timing.

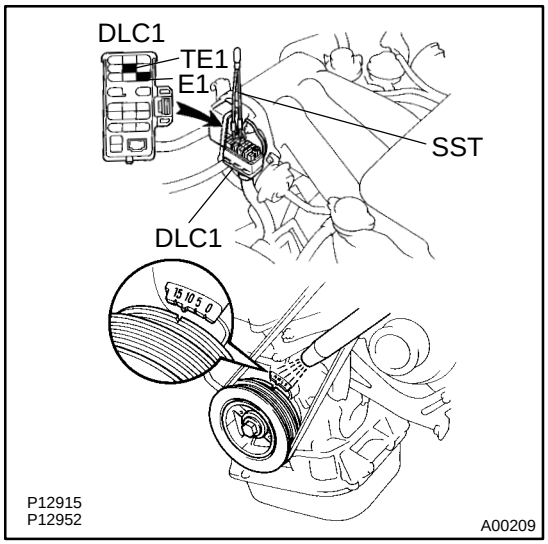

PREPARATION:

(a) Warm up engine to normal operating temperature.
(b) Switch off all the accessories.
(c) Switch off the A/C.
(d) Shift the transmission into the N position.
(e) Keep the engine speed at idle.
(f) Using SST, connect terminals TE1 and E1 of the DLC1.
SST 09843-18020
(g) Using a timing light, connect the tester to check wire.

CHECK:

Check the ignition timing.

OK:

Ignition timing: 10° BTDC at idle

NG → **Proceed to page IG-1 , and continue to trouble-shoot.**

OK

Proceed to problem symptoms table on page DI-22 .

7	Check fuel pressure.

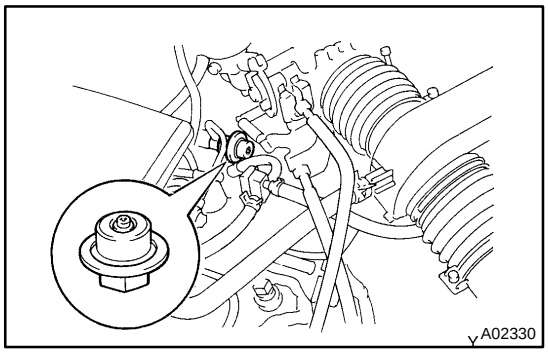

PREPARATION:

(a) Be sure that enough fuel is in the tank.
(b) Connect the TOYOTA hand-held tester to the DLC3.
(c) Turn the ignition switch ON and push TOYOTA hand-held tester main switch ON.
(d) Use the ACTIVE TEST mode to operate the fuel pump.
(e) If you have no TOYOTA hand-held tester, connect the positive (+) and negative (-) leads from the battery to the fuel pump connector (See page SF-6).

CHECK:

Check that the pulsation damper screw rises up when the fuel pump operates.

NG → **Proceed to page SF-6 , and continue to trouble-shoot.**

OK

8	Check for spark.

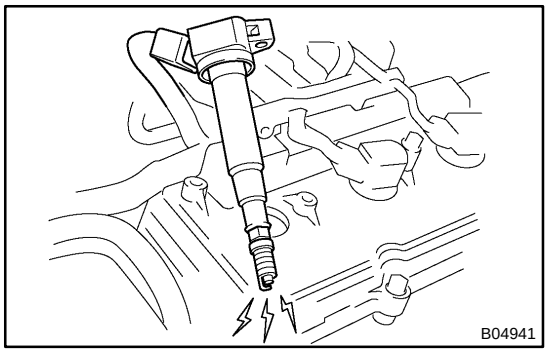

PREPARATION:

(a) Remove the ignition coil from the spark plug.
(b) Remove the spark plug.
(c) Install the spark plug to the ignition coil.
(d) Disconnect the injector connector.
(e) Be sure to ground the screw of the spark plug securely.

CHECK:

Check if spark occurs while the engine is being cranked.

NOTICE:

- **Do not crash the electrode gap.**
- **To prevent excess fuel being injected from the injectors during this test, don't crank the engine for more than 5 - 10 seconds at a time.**

NG → **Proceed to page IG-1 , and continue to troubleshoot.**

OK

Proceed to problem symptoms table on page DI-22 .

7. ENGINE OPERATING CONDITION

NOTICE:

The values given below for "Normal Condition" are representative values, so a vehicle may still be normal even if its value varies differ from those listed here. So do not decide whether a part is faulty or not solely according to the "Normal Condition" here.

(a) CARB mandated signals.

TOYOTA hand-held tester display	Measurement Item	Normal Condition*
FUEL SYS #1	Fuel System Bank 1 OPEN: Air-fuel ratio feedback stopped CLOSED: Air-fuel ratio feedback operating	Idling after warming up: CLOSED
FUEL SYS #2	Fuel System Bank 2 OPEN: Air-fuel ratio feedback stopped CLOSED: Air-fuel ratio feedback operating	Idling after warming up: CLOSED
CALC LOAD	Calculator Load: Current intake air volume as a proportion of max. intake air volume	Idling: 13.1 - 18.7 % Racing without load (2,500rpm): 11.7 - 17.3 %
COOLANT TEMP	Engine Coolant Temp. Sensor Value	After warming up: 80 - 95˚C (176 - 203˚F)
SHORT FT #1	Short-term Fuel Trim Bank 1	0 ± 20 %
LONG FT #1	Long-term Fuel Trim Bank 1	0 ± 20 %

SHORT FT #2	Short-term Fuel Trim Bank 2	0 ± 20 %
LONG FT #2	Long-term Fuel Trim Bank 2	0 ± 20 %
ENGINE SPD	Engine Speed	Idling: 650 - 750 rpm
VEHICLE SPD	Vehicle Speed	Vehicle stopped: 0 km/h (0 mph)
IGN ADVANCE	Ignition Advance: Ignition Timing of Cylinder No.1	Idling: BTDC 10 - 25.0°
INTAKE AIR	Intake Air Temp. Sensor Value	Equivalent to Ambient Temp.
MAF	Air Flow Rate Through Mass Air Flow Meter	Idling: 3.3 - 4.7 gm/sec. Racing without load (2,500 rpm): 10.4 - 15.4 gm/sec.
THROTTLE POS	Voltage Output of Throttle Position Sensor Calculated as a percentage: 0 V → 0 %, 5 V → 100 %	Throttle valve fully closed: 7 - 11 % Throttle valve fully open: 65 - 75 %
O2FT B1 S1	Oxygen Sensor Fuel Trim Bank 1 Sensor 1 (Same as SHORT FT #1)	0 ± 20 %
O2S B1 S2	Voltage Output of Oxygen Sensor Bank 1 Sensor 2	Driving 50 km/h (31 mph): 0.05 - 0.95 V
O2FT B2 S1	Oxygen Sensor Fuel Trim Bank 2 Sensor 1 (Same as SHORT FT #2)	0 ± 20 %
A/FS B1 S1	Voltage Output of A/F Sensor Bank 1 Sensor 1	Idling: 2.8 - 3.8 V
A/FS B2 S1	Voltage Output of A/F Sensor Bank 2 Sensor 1	Idling: 2.8 - 3.8 V
A/FFT B1 S1	A/F Sensor Fuel Trim Bank 1 Sensor 1 (Same as SHORT FT #1)	0 ± 20 %
A/FFT B2 S1	A/F Sensor Fuel Trim Bank 2 Sensor 1 (Same as SHORT FT #1)	0 ± 20 %

*: If no conditions are specifically stated for "Idling", it means the shift lever is at N or P position, the A/C switch is OFF and all accessory switches are OFF.

(b) TOYOTA Enhanced Signals.

TOYOTA hand-held tester display	Measurement Item	Normal Condition*
MISFIRE RPM	Engine RPM for first misfire range	Misfire 0: 0 rpm
MISFIRE LOAD	Engine load for first misfire range	Misfire 0: 0 g/r
INJECTOR	Fuel injection time for cylinder No.1	Idling: 1.6 - 2.9 ms
IAC DUTY RATIO	Intake Air Control Valve Duty Ratio Opening ratio rotary solenoid type IAC valve	Idling: 27 - 47 %
STARTER SIG	Starter Signal	Cranking: ON
CTP SIG	Closed Throttle Position Signal	Throttle fully closed: ON
A/C SIG	A/C Switch Signal	A/C ON: ON
PNP SW	Park/Neutral Position Switch Signal	P or N position: ON
ELCTRCL LOAD SIG	Electrical Load Signal	Defogger switch ON: ON
STOP LIGHT SW	Stop Light Switch Signal	Stop light switch ON: ON
PS OIL PRESS SW	Power Steering Oil Pressure Switch Signal	Turn steering wheel: ON
FC IDL	Fuel Cut Idle: Fuel cut when throttle valve fully closed, during deceleration	Fuel cut operating: ON
FC TAU	Fuel Cut TAU: Fuel cut during very light load	Fuel cut operating: ON
CYL#1 - CYL#6	Abnormal revolution variation for each cylinder	0 %
IGNITION	Total number of ignition for every 1,000 revolutions	0 - 3,000
INTAKE CTRL VSV	Intake Air Control Valve VSV Signal	VSV operating: ON
A/C CUT SIG	A/C Cut Signal	A/C S/W OFF: ON
FUEL PUMP	Fuel Pump Signal	Idling: ON

EVAP (PURGE) VSV	EVAP VSV Signal	VSV operating: Above 30 %
VAPOR PRESS VSV	Vapor Pressure VSV Signal	VSV operating: ON
TOTAL FT B1	Total Fuel Trim Bank 1: Average value for fuel trim system of bank 1	Idling: 0.8 - 1.2
TOTAL FT B2	Total Fuel Trim Bank 1: Average value for fuel trim system of bank 2	Idling: 0.8 - 1.2

*: If no conditions are specifically stated for ”ldling”, it means the shift lever is at N or P position, the A/C switch is OFF and all accessory switches are OFF.

DI07E-09

PROBLEM SYMPTOMS TABLE

Symptom	Suspect Area	See page
Engine does not crank (Does not start)	15.Starter 16.Starter relay	ST-18 ST-20
No initial combustion (Does not start)	1. ECM power source circuit 2. Fuel pump control circuit 3. ECM	DI-148 DI-152 IN-30
No complete combustion (Does not start)	1. Fuel pump control circuit	DI-152
Engine cranks normally (Difficult to start)	1. Starter signal circuit 2. Fuel pump control circuit 3. Compression	DI-142 DI-152 EM-3
Cold engine (Difficult to start)	1. Starter signal circuit 2. Fuel pump control circuit	DI-142 DI-152
Hot engine (Difficult to start)	1. Starter signal circuit 2. Fuel pump control circuit	DI-142 DI-152
High engine idle speed (Poor idling)	1. A/C signal circuit (Compressor circuit) 2. ECM power source circuit	DI-824 DI-148
Low engine idle speed (Poor idling)	1. A/C signal circuit (Compressor circuit) 2. Fuel pump control circuit	DI-824 DI-152
Rough idling (Poor idling)	1. Compression 2. Fuel pump control circuit	EM-3 DI-152
Hunting (Poor idling)	1. ECM power source circuit 2. Fuel pump control circuit	DI-148 DI-152
Hesitation/Poor acceleration (Poor driveability)	1. Fuel pump control circuit 2. A/T faulty	DI-152 DI-158
Surging (Poor driveability)	1. Fuel pump control circuit	DI-152
Soon after starting (Engine stall)	1. Fuel pump control circuit	DI-152
During A/C operation (Engine stall)	1. A/C signal circuit (Compressor circuit) 2. ECM	DI-824 IN-30
Unable to refuel/Difficult to refuel	1. ORVR system	EC-6

DI4DE-02

TERMINALS OF ECM

ECM Terminals

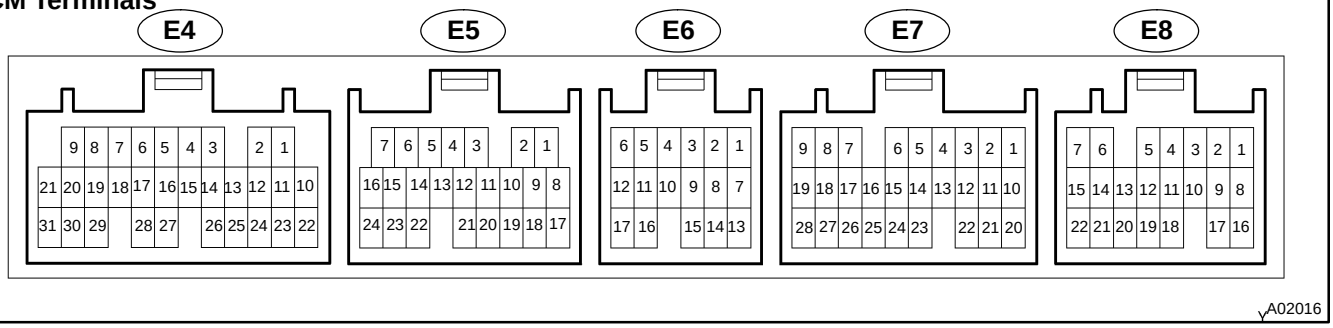

Symbols (Terminal No.)	Wiring Color	Condition	STD Voltage (V)
BATT (E8-1) - E1 (E5-17)	B-R ↔ BR	Always	9 - 14
+B (E8-16) - E1 (E5-17)	B-W ↔ BR	IG switch ON	9 - 14
VC (E5-2) - E2 (E5-18)	L-R ↔ W	IG switch ON	4.5 - 5.5
VTA1 (E5-23) - E2 (E5-18)	LG ↔ W	IG switch ON, Throttle valve fully closed	0.3 - 1.0
		IG switch ON, Throttle valve fully open	2.7 - 5.2
VG (E5-10) - E2G (E5-19)	R ↔ R-B	Idling, A/C switch OFF	1.1 - 1.5
VV1+ (E4-10) - NE- (E5-24)	B-W ↔ L	Idling	Pulse generation (See page DI-124)
VV2+ (E4-22) - NE- (E5-24)	B-W ↔ L		
NE+ (E5-16) - NE- (E5-24)	B-W ↔ L	Idling	Pulse generation (See page DI-124)
OC1+ (E4-6) - OC1- (E4-5)	R-B ↔ R	IG switch ON	Pulse generation (See page DI-127)
OC2+ (E4-29) - OC2- (E4-18)	R-L ↔ R-W		
THA (E5-22) - E2 (E5-18)	L-B ↔ W	Idling, Intake air temp. 20°C (68°F)	0.5 - 3.4
THW (E5-14) - E2 (E5-18)	G-Y ↔ W	Idling, Engine coolant temp. 80°C (176°F)	0.2 - 1.0
STA (E8-7) - E1 (E5-17)	B-R ↔ BR	Cranking	6.0 or more
#10 (E5-5) - E01 (E4-21) #20 (E5-6) - E01 (E4-21) #30 (E4-1) - E01 (E4-21) #40 (E4-2) - E01 (E4-21) #50 (E4-3) - E01 (E4-21) #60 (E4-4) - E01 (E4-21)	L ↔ W-B R ↔ W-B Y ↔ W-B W ↔ W-B G ↔ W-B G ↔ W-B	IG switch ON	9 - 14
		Idling	Pulse generation (See page DI-58)
IGT1 (E4-11) - E1 (E5-17)	GR ↔ BR	Idling	Pulse generation (See page DI-117)
IGT2 (E4-12) - E1 (E5-17)	B-R ↔ BR		
IGT3 (E4-13) - E1 (E5-17)	LG-B ↔ BR		
IGT4 (E4-14) - E1 (E5-17)	L-Y ↔ BR		
IGT5 (E4-15) - E1 (E5-17)	L ↔ BR		
IGT6 (E4-16) - E1 (E5-17)	LG ↔ BR		
IGF (E4-25) - E1 (E5-17)	B-Y ↔ BR	IG switch ON	4.5 - 5.5
		Idling	Pulse generation (See page DI-117)
ACIS (E8-17) - E01 (E4-21)	R-Y ↔ W-B	IG switch ON	9 - 14
ACI1 (E5-15) - E01 (E4-21)	W-R ↔ W-B		
FC (E8-3) - E01 (E4-21)	G-B ↔ W-B	IG switch ON	9 - 14
		Idling	0 - 3.0

EVP1 (E5-7) - E01 (E4-21)	B-R ↔ W-B	IG switch ON	9 - 14
CCV (E8-10) - E01 (E4-21)	G ↔ W-B	IG switch ON	9 - 14
RSO (E4-26) - E01 (E4-21)	G-B ↔ W-B	IG switch ON, Disconnect E11 connector from ECM	9 - 14
OXS (E7-8) - E1 (E5-17)	B ↔ BR	Maintain engine speed at 2,500 rpm for 3 min. after warming up	Pulse generation (See page DI-71)
HTS (E7-9) - E03 (E4- 30)	LG ↔ W-B	Idling	Below 3.0
		IG switch ON	9 - 14
KNKR (E4-27) - E1 (E5-17)	W ↔ BR	Idling	Pulse generation (See page DI-64)
KNKL (E4-28) - E1 (E5-17)	W ↔ BR		
NSW (E7-20) - E1 (E5-17)	B-W ↔ BR	IG switch ON, Other shift position in P, N	9 - 14
		IG switch ON, Shift position in P, N	0
TACH (E7-27) - E1 (E5-17)	B ↔ BR	Idling	Pulse generation
TBP (E7-3) - E01 (E4-21)	P-B ↔ W-B	IG switch ON, Disconnect vacuum hose from vapor pressure sensor	9 - 14
PTNK (E8-17) - E2 (E5-18)	P ↔ W	IG switch ON	2.9 - 3.7
		IG switch ON, Apply vacuum 4.0 kPa (30 mmHg, 1.18 in.Hg)	0.5 or less
SIL (E8-4) - E1 (E5-17)	W ↔ BR	During transmission	Pulse generation
STP (E8-15) - E1 (E5-17)	G-W ↔ BR	IG switch ON, Brake pedal depressed	7.5 - 14
		IG switch ON, Brake pedal released	Below 1.5
AFR+ (E5-11) - E1 (E5-17)	B-R ↔ BR	IG switch ON	3.0 - 3.6
AFL+ (E5-12) - E1 (E5-17)	B-W ↔ BR		
AFR- (E5-20) - E1 (E5-17)	BR ↔ BR	IG switch ON	2.7 - 3.3
AFL- (E5-21) - E1 (E5-17)	L ↔ BR		
HAFR (E5-3) - E04 (E5-1)	B-R ↔ W-B	Idling	Below 3.0
HAFL (E5-4) - E05 (E5-8)	B-R ↔ W-B	IG switch ON	9 - 14
KSW (E7-23) - E1 (E5-17)	R-Y ↔ BR	At time of inserting key	Below 1.5
		In condition without key inserted	4 - 5
CODE (E7-28) - E1 (E5-17)	P-G ↔ BR	At time of inserting key	Pulse generation
IGSW (E8-2) - E1 (E5-17)	B-O ↔ BR	IG switch ON	9 - 14
TXCT (E7-18) - E1 (E5-17)	L-Y ↔ BR	At time of inserting key	Pulse generation
IMLD (E8-22) - E1 (E5-17)	V-W ↔ BR	In condition without key inserted	Pulse generation
MREL (E8-8) - E1 (E5-17)	L-O ↔ BR	IG switch ON	9 - 14

DI1AS-20

CIRCUIT INSPECTION

DTC	B2795/99	Unmatched Key Code

This DTC is output when an unregistered key is inserted. When this DTC is output, delete DTC and insert the key that a customer keeps to check that B2795 is output.
When a key that outputs B2795 is found, register this key. when B2795 is not output, there is a possibility that the unregistered key has been inserted before. (ECM is normal.)
Inquire a customer the condition of using the system to find the cause of the trouble.
(Example: Another key has been inserted, etc..)

DTC No.	DTC Detecting Condition	Trouble Area
B2795/99	No communication	●Key

INSPECTION PROCEDURE

1	**Delete DTC and insert all the presently available keys to check whether the engine starts or not.**

HINT:
When inserting the key that does not start the engine, DTC (B 2795) is stored in memory.

RESULT:

OK	All keys starts the engine.
NG	A specific key does not start the engine.

OK → **No problem.**

HINT:
If the result is ”OK”, please confirm whether or not customers have ever inserted the unregistered key or the immobiliser key (with transponder chip) of other vehicle in the ignition key cylinder, and find out the cause of detecting DTC.

NG

Register the key that does not start the engine.

DI1AT-23

DTC	B2796/99	No Communication in Immobiliser system

CIRCUIT DESCRIPTION

This code is stored in memory when inserting the key that does not have a transponder chip or if communication between the key and ECM is impossible.

DTC No.	DTC Detecting Condition	Trouble Area
B2796/99	No communication	●Key ●Transponder Key Coil ●Transponder Key Amplifier ●Wire harness ●ECM

WIRING DIAGRAM

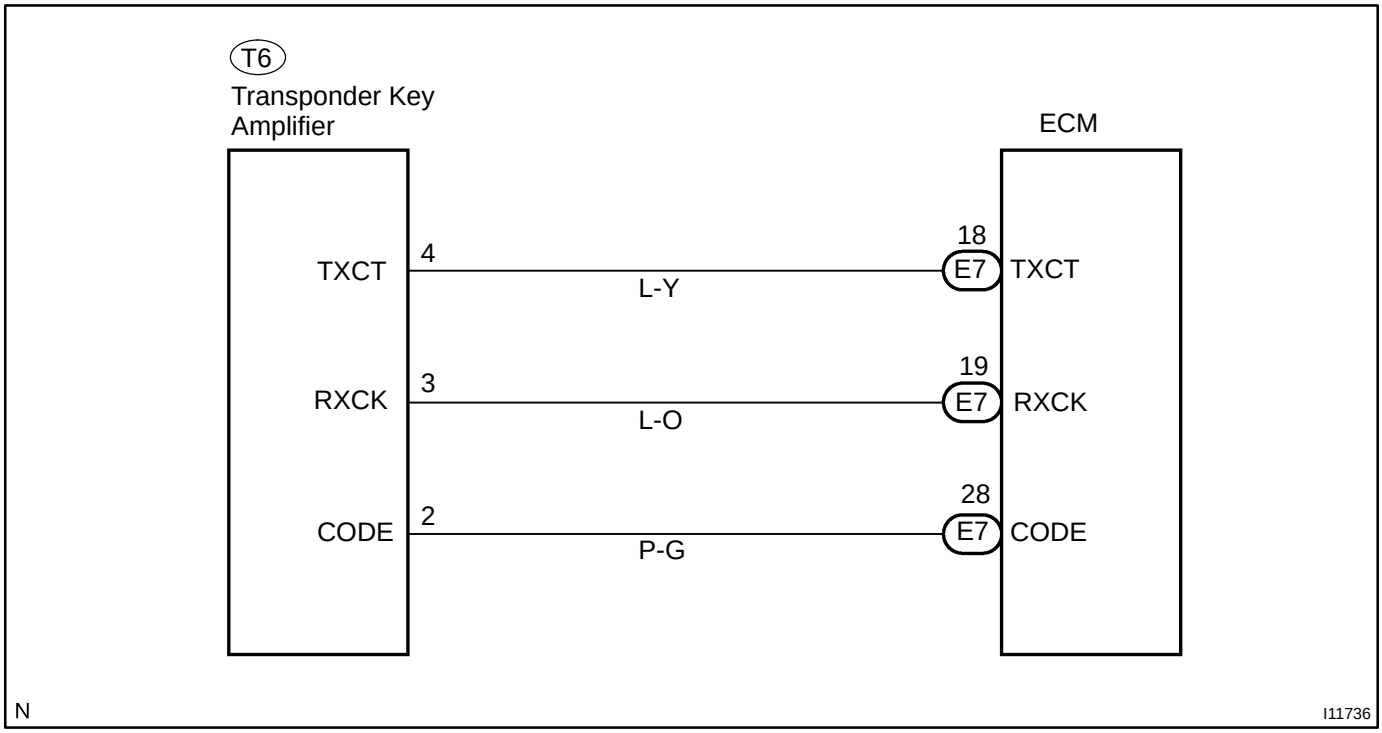

INSPECTION PROCEDURE

1	**Delete DTC and insert all the presently available keys to check whether the engine starts or not.**

RESULT:

A	All keys start the engine.
B	A specific key does not start the engine. In this case, DTC (B 2796) is stored in memory.
C	All keys do not start the engine. In this case, DTC (B 2796) is stored in memory.

A → **No problem at this time.**

HINT:

If the result is ”A”, please confirm whether or not customers have ever inserted the key (without transponder chip) of other vehicle in the ignition key cylinder, and find out the cause of detecting DTC.

B → **The transponder chip of a specific key is defective. Replace the key.**

C

2	**Check transponder key coil (See page BE-181).**

NG → **Replace transponder key coil.**

OK

3	**Check harness and connector between transponder key amplifier and ECM.**

NG → **Repair or replace harness and connector.**

OK

4	**Does it operate normally after replacement of transponder key amplifier?**

Yes → **Replace transponder key amplifier.**

No

Replace ECM.

DI6LC-01

DTC	B2797/99	Communication Malfunction No.1

CIRCUIT DESCRIPTION

This code is detected when although the communication has been performed normally, an error occurs. (Example. Some noise is included in communication line.)

DTC No.	DTC Detecting Condition	Trouble Area
B2797/99	Communication error	●Wire Harness ●Transponder Key Amplifier ●ECM

WIRING DIAGRAM

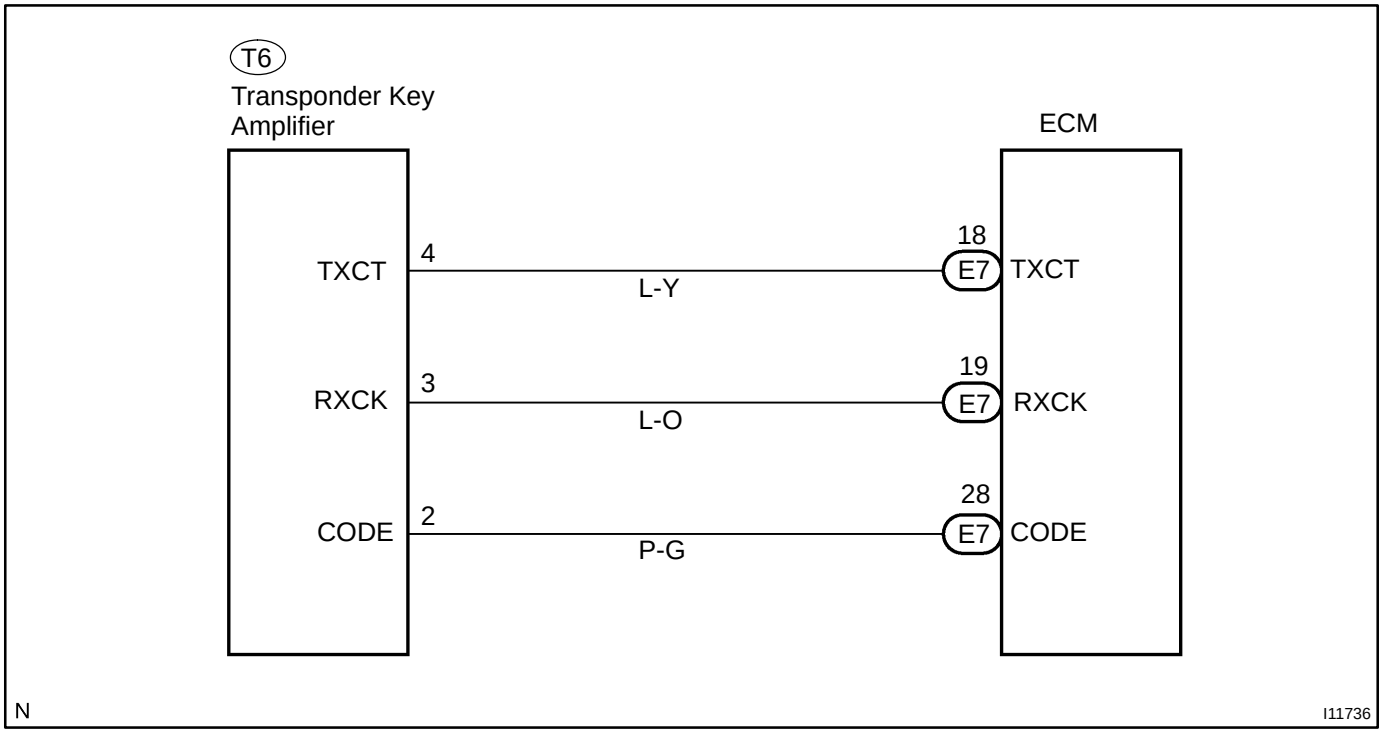

INSPECTION PROCEDURE

1	**Noise check**

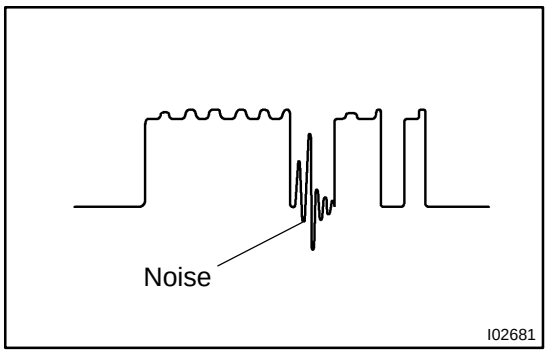

PREPARATION:
Insert the already registered master key in the key cylinder.
CHECK:
Using an oscilloscope or hand-held tester, check that noise is included in the signals sent to the CODE terminal of Engine and ECT ECU.
OK:
No noise is detected.

NG → **Try to find the cause of the noise and remove it.**

OK

2	**Does the system operate normally after replacement of transponder key amplifier?**

Yes → **Replace transponder key amplifier.**

No

Replace ECM.

DI6LE-01

Transponder key coil circuit

CIRCUIT DESCRIPTION

DTC No.	Detection Item	Trouble Area
B2798/99	Communication error	●Key ●Transponder Key Coil ●Transponder Key Amplifier ●Wire harness ●ECM

WIRING DIAGRAM

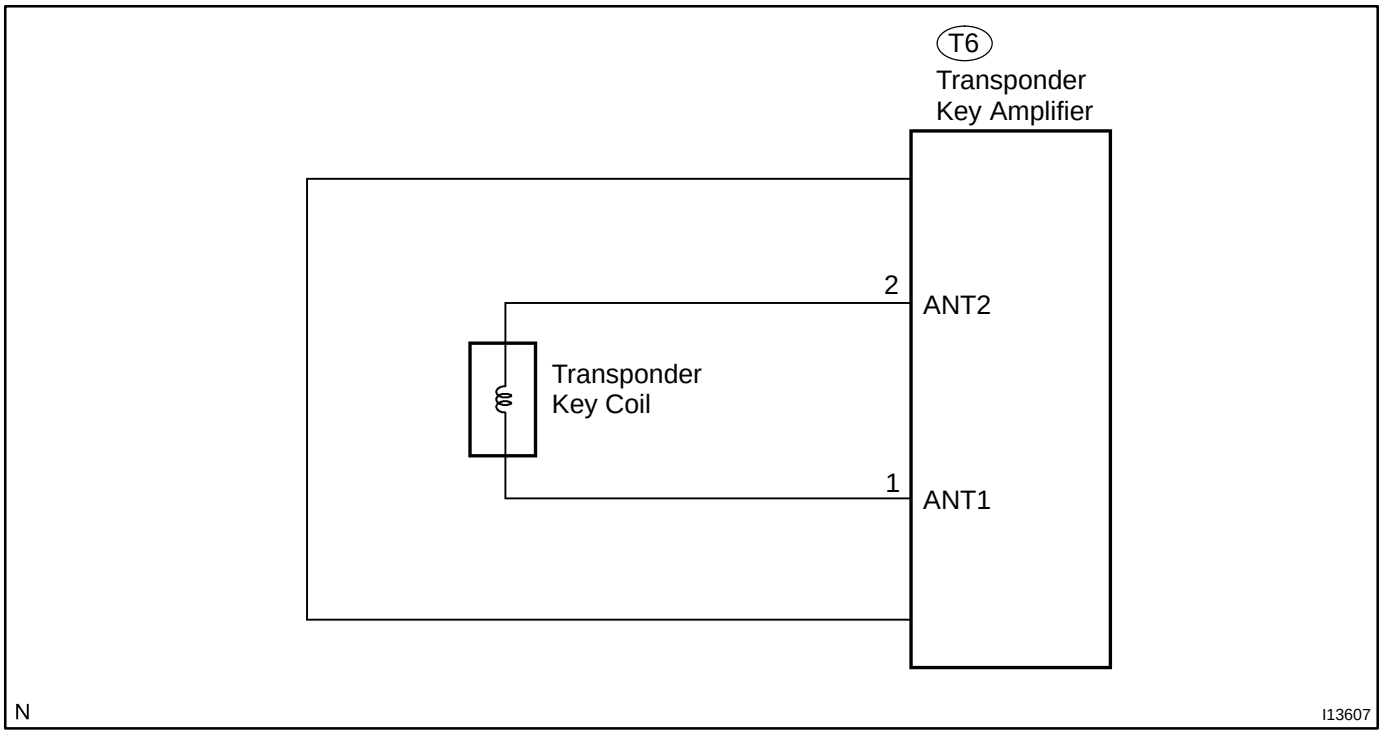

INSPECTION PROCEDURE

1	Check transponder key coil (See page BE-181).

NG → Replace transponder key coil.

OK

2	Check harness and connector between transponder key amplifier and ECM.

NG → Repair of replace harness and connector.

OK

3	Does the system operate normally after replacement of transponder key amplifier?

Yes → Replace transponder key amplifier.

No

Replace ECM.

DI6LD-01

Power source circuit

CIRCUIT DESCRIPTION

This circuit provides power to operate the Transponder Key ECU

WIRING DIAGRAM

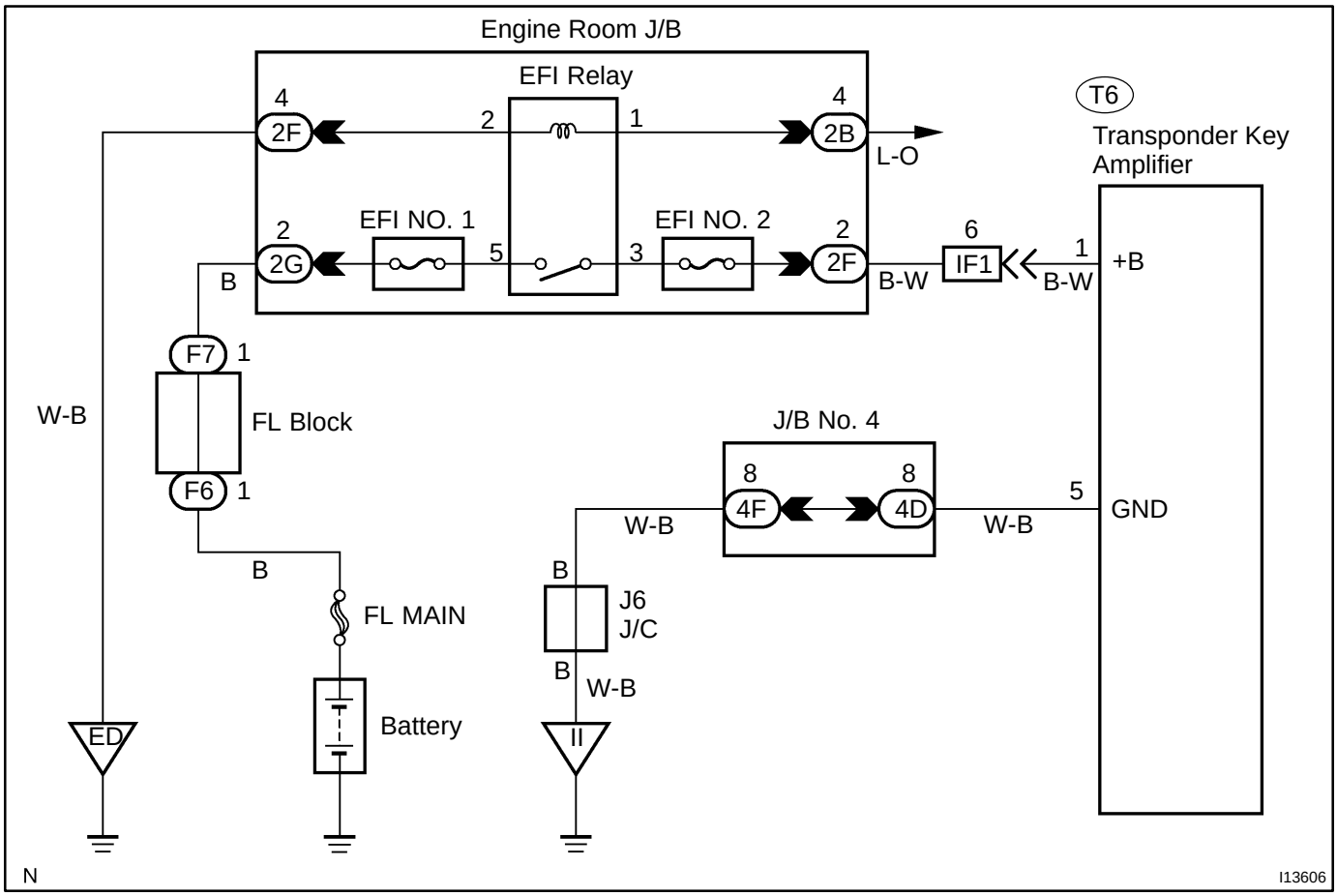

INSPECTION PROCEDURE

1	**Check EFI fuse.**

CHECK:

Check continuity of EFI fuse.

OK:

Continuity

NG → **Replace the failure fuse.**

OK

2	**Check voltage between terminals EFI and GND of Transponder Key ECU connector.**

PREPARATION:

(a) Turn ignition switch OFF.

(b) Disconnect the Transponder Key ECU connector.

CHECK:

Measure voltage between terminals +B and GND.

OK:

Voltage: 10 - 14 V

OK → **Proceed to next circuit inspection shown in problem symptoms table (See page DI-604).**

NG

3	**Check wireharness and connector between Transponder Key ECU and body ground.**

NG → **Repair or replace wireharness or connector.**

OK

Check and repair wirehareness and connector between Transponder Key ECU and Battery.

DI1AK-12

CUSTOMER PROBLEM ANALYSIS CHECK

ENGINE IMMOBLISER Check Sheet

Inspector's Name :

Customer's Name		**Registration No.**	
		Registration Year	/ /
		Frame No.	
Date Vehicle Brought In	/ /	**Odometer Reading**	km miles

Date Problem First Occurred	/ /
Frequency Problem Occurs	☐ Continuous ☐ Intermittent (times a day)

Symptoms	☐ Immobiliser is not set. (Engine starts with key codes other than the registered key code.)
	☐ Engine does not start.

Check Item	**Malfunction Indicator Lamp**	☐ Normal ☐ Remains ON ☐ Does not Light Up

DTC Check	**1st Time**	☐ Normal Code ☐ Malfunction Code (Code)
	2nd Time	☐ Normal Code ☐ Malfunction Code (Code)

DI1AM-17

DIAGNOSTIC TROUBLE CODE CHART

DTC No. (See Page)	Detection Item	Trouble Area
B2795 (DI-605)	Unmatched key code	●Key ●Unregistered key inserted before
B2796 (DI-606)	No communication in immobiliser system	●Key ●Transponder key coil ●Amplifier ●Wirehaness ●ECM
B2797 (DI-609)	Communication malfunction	●Communication contents ●Unregistered key inserted before

HINT:

To reduce the unnecessary exchange of ECM, check that a trouble occurs with the original ECM at the time of excanging ECM and the trouble will disappear with a new ECM.

ENGINE IMMOBILISER SYSTEM

DI1AJ-18

HOW TO PROCEED WITH TROUBLESHOOTING

Troubleshoot in accordance with the procedure on the following pages.

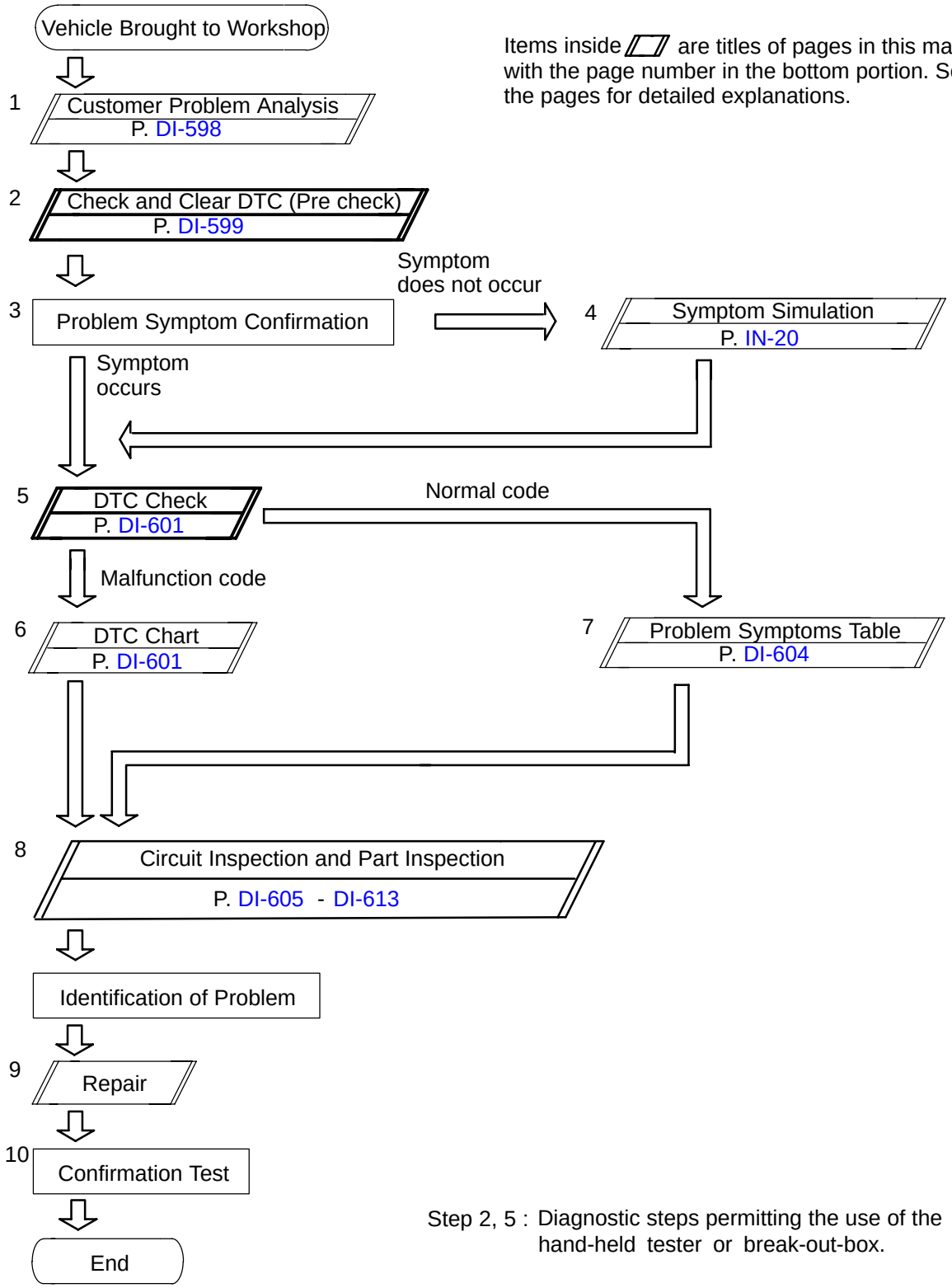

Items inside ▱ are titles of pages in this manual, with the page number in the bottom portion. See the pages for detailed explanations.

Step 2, 5 : Diagnostic steps permitting the use of the hand-held tester or break-out-box.

DI1AN-06

PARTS LOCATION

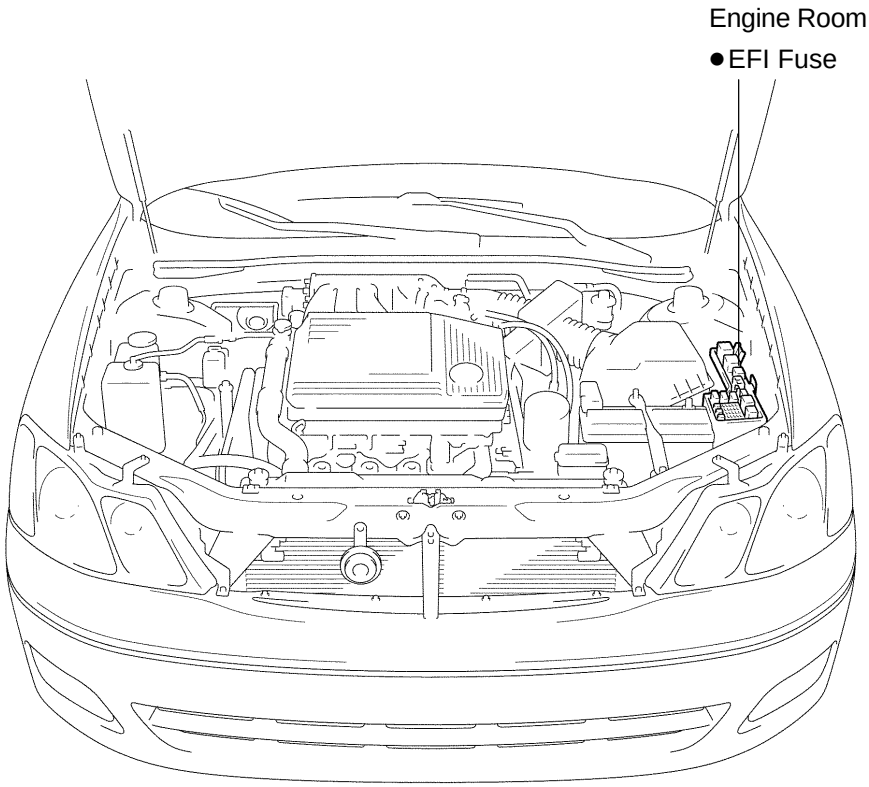

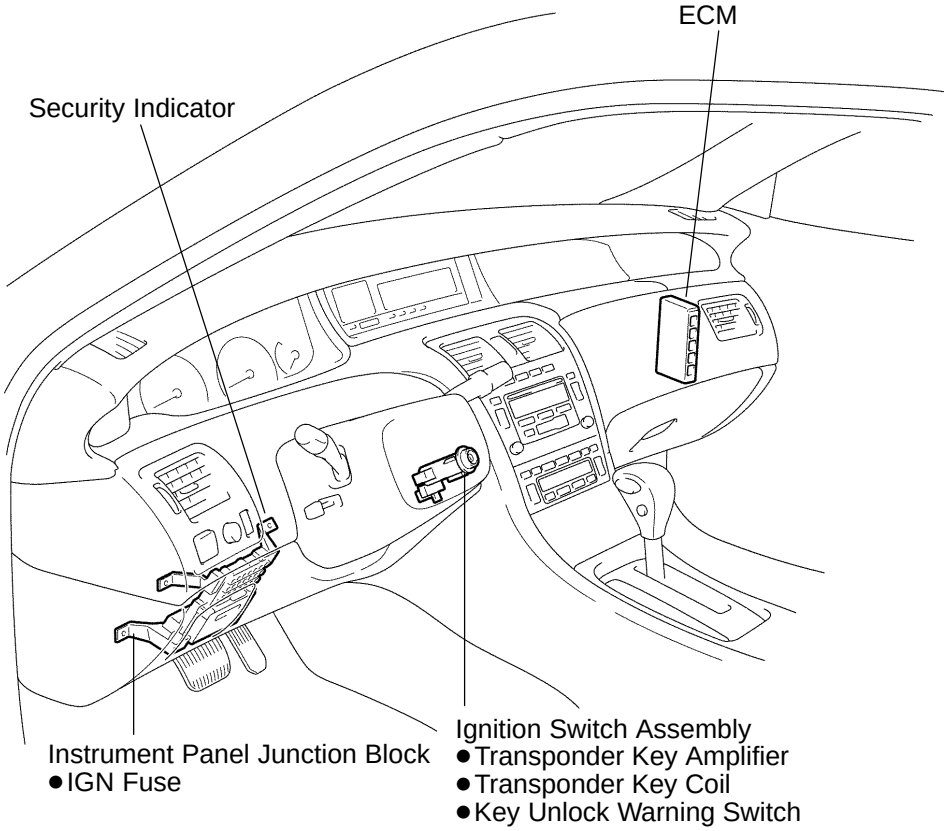

P

I12540

DI6LA-01

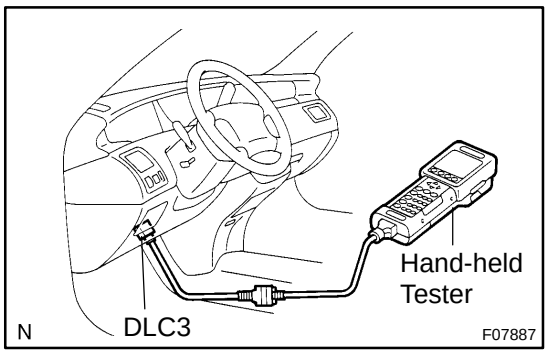

PRE-CHECK

1. DIAGNOSIS SYSTEM

(a) Description

ECM controls the function of immobiliser on this vehicle. Data of the immobiliser or DTC can be read form DLC3 of the vehicle. When a trouble occurs on immobiliser, check engine warning light does not light up but DTC inspection is performed.

Therefore when there seems to be a trouble on immobiliser, use hand-held tester or SST to check and troubleshoot it.

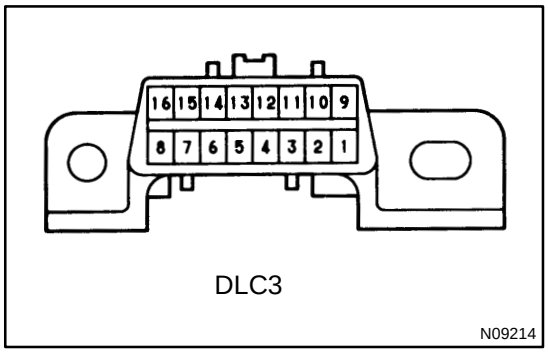

(b) Check the DLC3.

The vehicle's ECM uses ISO 14230 for communication. The terminal arrangement of DLC3 complies with SAE J1962 and matches the ISO 14230 format.

Terminal No.	Connection / Voltage or Resistance	Condition
7	Bus ≦ Line / Pulse generation	During transmission
4	Chassis Ground ↔ Body Ground / 1 Ω or less	Always
16	Battery Positive ↔ Body Ground / 9 ~ 14 V	Always

HINT:

If your display shows "UNABLE TO CONNECT TO VEHICLE" when you have connected the cable of the hand-held tester to DLC3, turned the ignition switch ON and operated the hand-held tester, there is a problem on the vehicle side or tool side.

- If communication is normal when the tool is connected to another vehicle, inspect DLC3 on the original vehicle.
- If communication is still not possible when the tool is connected to another vehicle, the problem is probably in the tool itself, so consult the Service Department listed in the tool's instruction manual.

2. INSPECT DIAGNOSIS (Normal Mode)

(a) Check the DTC using hand-held tester.

NOTICE:

Hand- held tester only: When the diagnosis system is switched from normal mode to check mode, it erases all DTCs and freezed frame data recorded in normal mode. So before switching modes, always check the DTCs and freezed frame data, and note them down.

(1) Prepare the hand-held tester.

(2) Connect the hand-held tester to DLC3.

(3) Turn the ignition switch ON and push the hand-held tester main switch ON.

(4) Use the hand-held tester to check the DTCs and freezed frame data, note them down. (For operating instructions, see the hand-held tester instruction book.)

(5) See page DI-601 to confirm the details of the DTCs.

(b) Clear the DTC.

The following operations will erase the DTCs and freeze frame data.

(1) Operating the OBD ll scam tool (complying with SAEJ1978) or hand-held tester to erase the codes. (See the OBD ll scan tool's instruction book for operating instructions.)

(2) Disconnecting the battery terminals or EFI fuse.

DI1AP-17

PROBLEM SYMPTOMS TABLE

Symptom	Suspect Area	See page
Immobiliser is not set. (Engine starts with key codes other than the registered key code.)	1. ECM	IN-30
Engine does not start.	1. Key 2. Wire harness 3. Transponder key coil 4. Amplifier 5. ECM	*1 IN-30 DI-613 IN-30
Security indicator is always ON.	1. Security indicator 2. Wire harness 3. ECM	*2 IN-30 IN-30
Security indicator is always ON. (Although code has been registered in the automatic registration mode, indicator is not OFF.)	1. Wire harness 2 Transponder key coil 3. Amplifier 4. ECM	IN-30 DI-613 IN-30
Security indicator is OFF. (When DTC of immobiliser is output)	1. Wire harness 2 Transponder key coil 3. Amplifier 4. ECM	IN-30 DI-613 IN-30
Security indicator is OFF. (When DTC of immobiliser is not output)	1. Wire harness 2. ECM	IN-30 IN-30
Security indicator is abnormally blinking.	1. Wire harness 2. ECM	IN-30 IN-30

*1 : Check that the key which did not start the engine has been registered and that it is possible to start with other already registered key.

*2 : Finish the automatic registration mode because the mode might still remain.

DI6LB-01

TERMINALS OF ECM

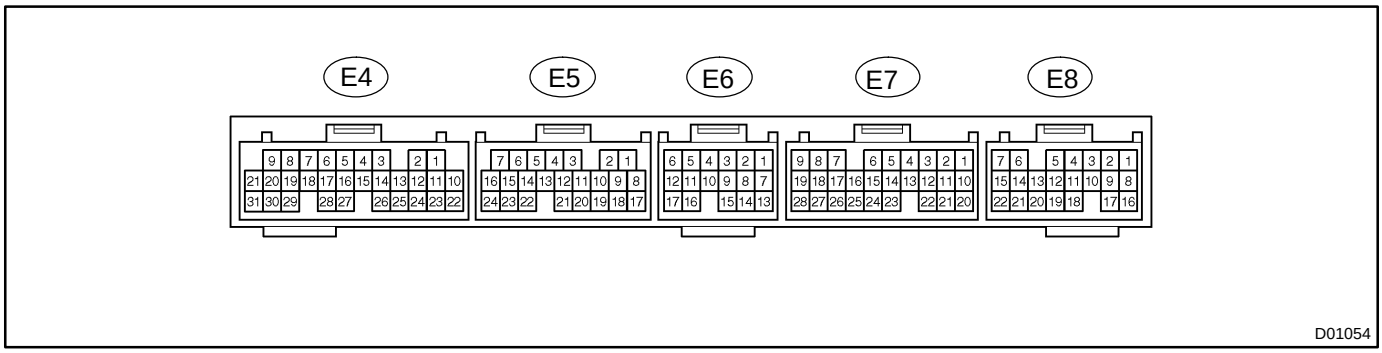

Symbols (Terminals No.)	Wiring Color	Condition	STD Voltage (V)
CODE ↔ E1 (E7-28 ↔ E5-17)	P-G ↔ BR	Ignition Switch ON	10 - 14
TXCT ↔ E1 (E7-18 ↔ E5-17)	L-Y ↔ BR	Ignition Switch ON	10 - 14
IGSW ↔ E1 (E8-2 ↔ E5-17)	B-O ↔ BR	Ignition Switch ON	10 - 14
RXCK ↔ E1 (E7-19 ↔ E5-17)	L-O ↔ BR	Ignition Switch ON	10 - 14

DI0FY-11

CIRCUIT INSPECTION

+B Power Source Circuit

CIRCUIT DESCRIPTION

This is the power source for motors such as the slide motor, reclining motor, front vertical motor and rear vertical motor.

WIRING DIAGRAM

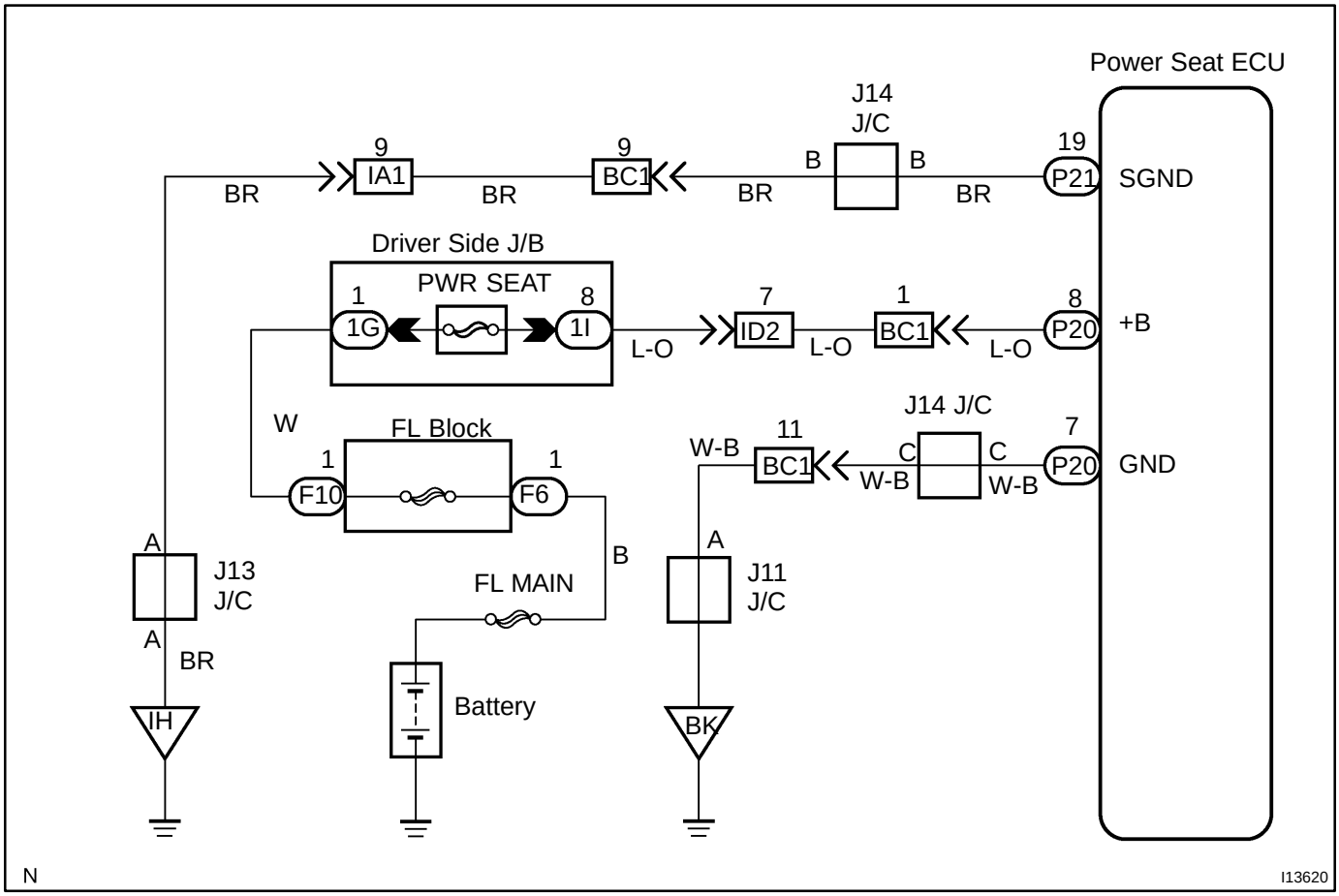

INSPECTION PROCEDURE

1	**Check voltage between terminals +B and GND of Seat Position Control ECU connector.**

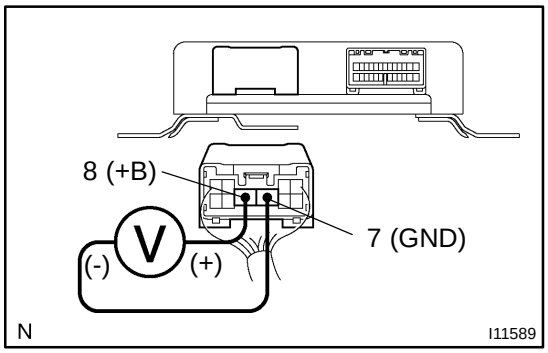

PREPARATION:

Remove Seat Position Control ECU with connectors still connected.

CHECK:

Measure voltage between terminals +B and GND of Seat Position Control ECU connector.

OK:

Voltage: 10 - 14 V

OK	**Proceed to next circuit inspection shown on problem symptom table (See page DI-493).**

NG

2	**Check continuity between terminals GND of Seat Position Control ECU connector and body ground.**

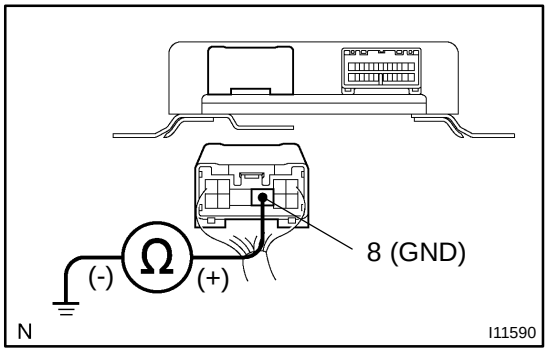

CHECK:

Measure resistance between terminals GND of Seat Position Control ECU connector and body ground.

OK:

Resistance: Continuity (below 1 Ω)

NG	**Repair or replace harness or connector.**

OK

3	**Check POWER SEAT fuse.**

NG → **Check for short in all the harness and components connected to the POWER SEAT fuse, and repair them (See attached wiring diagram).**

OK

Check and repair harness or connector between Seat Position Control ECU and battery.

DI0G1-09

ECU Power Source Circuit

CIRCUIT DESCRIPTION

This circuit provides power for ECU operation and is also the power source for the sensor.

WIRING DIAGRAM

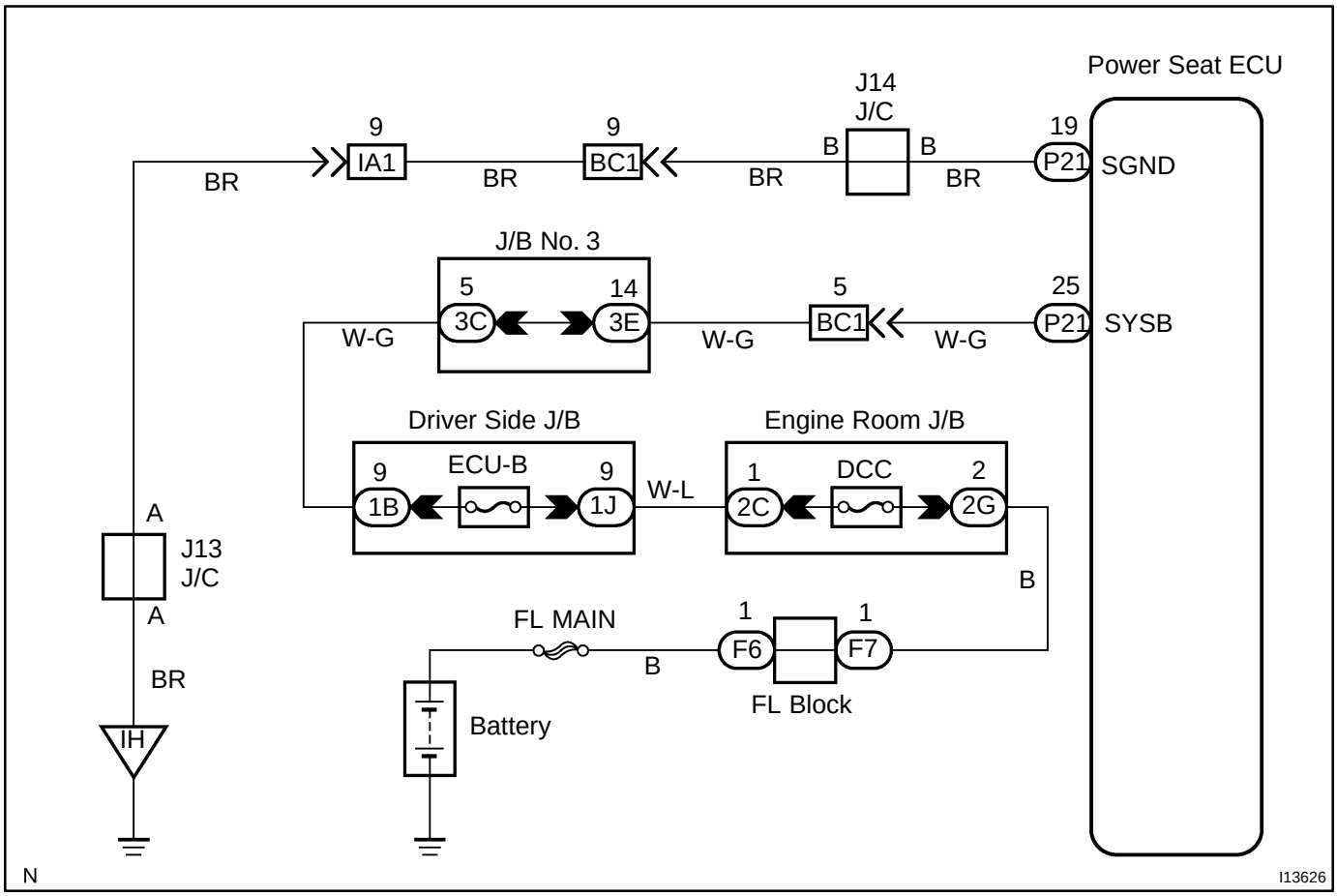

INSPECTION PROCEDURE

1	**Check voltage between terminals SYSB and SGND of Seat Position Control ECU connector.**

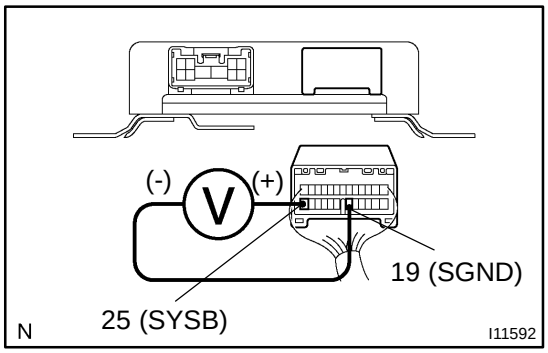

PREPARATION:

Remove Seat Position Control ECU with connectors still connected.

CHECK:

Measure voltage between terminals SYSB and SGND of Seat Position Control ECU connector.

OK:

Voltage: 10 - 14 V

OK	**Proceed to next circuit inspection shown on problem symptom table (See page DI-493).**

NG

2	**Check continuity between terminals SGND of Seat Position Control ECU connector and body ground.**

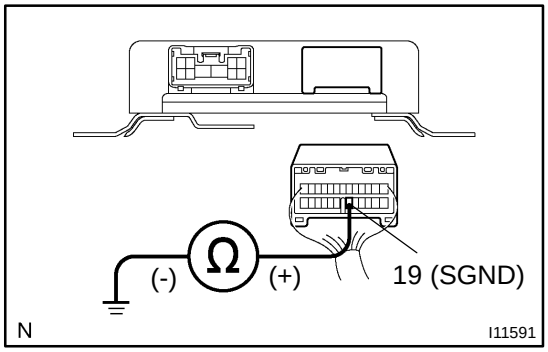

CHECK:

Measure resistance between terminal SGND of Seat Position Control ECU connector and body ground.

OK:

Resistance: Continuity (below 1 Ω)

NG	**Repair or replace harness or connector.**

OK

3	**Check ECU-B No. 2 fuse.**

NG → **Check for short in all the harness and components connected to ECU-B No. 2 fuse and repair them (See attached wiring diagram).**

OK ↓

Check and repair harness or connector between Seat Position Control ECU and battery.

DI0GF-09

Ignition Switch Circuit

CIRCUIT DESCRIPTION

This circuit sends an ignition switch ON or OFF signal to the ECU.

WIRING DIAGRAM

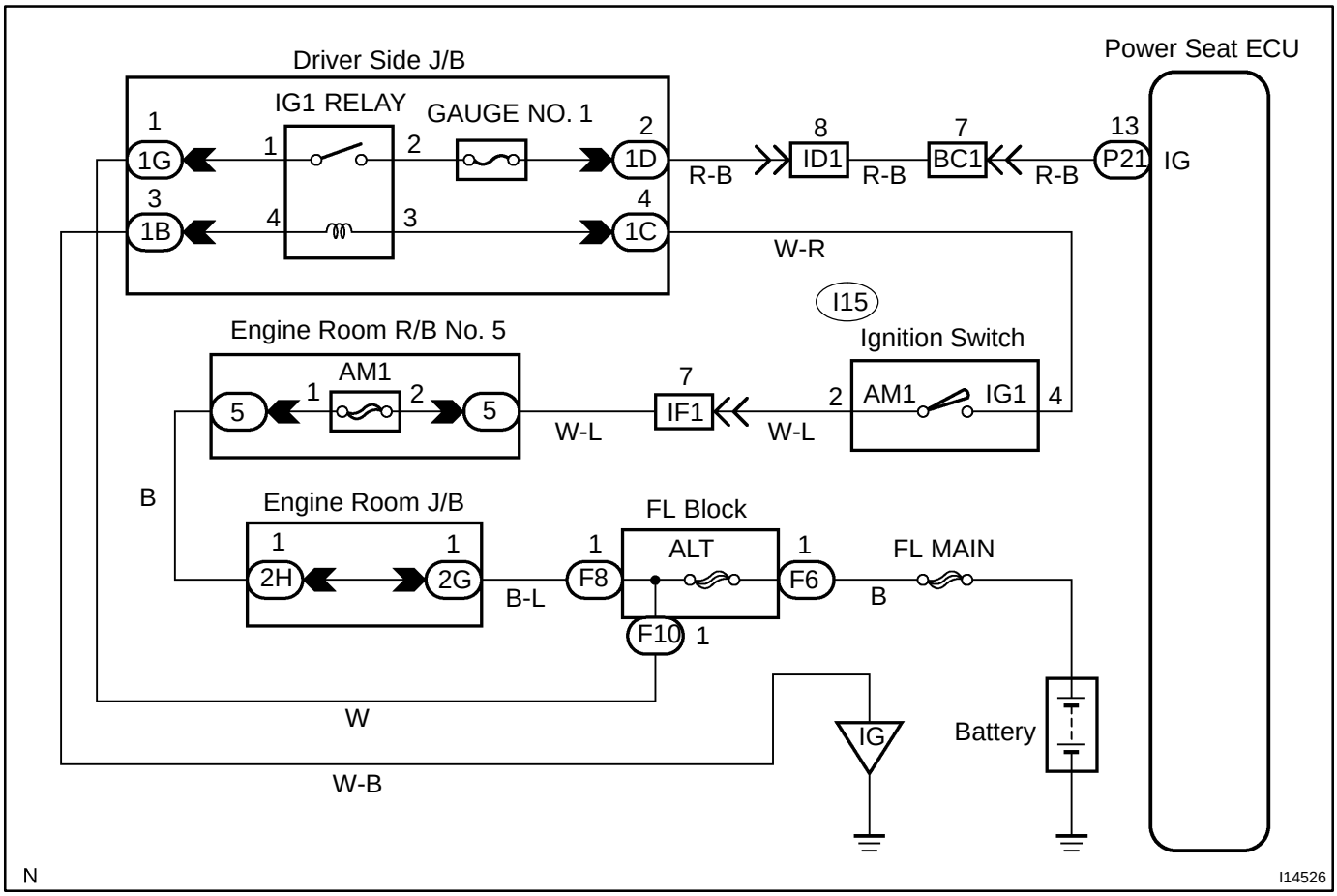

INSPECTION PROCEDURE

1	Check voltage between terminal IG of Seat Position Control ECU connector and body ground.

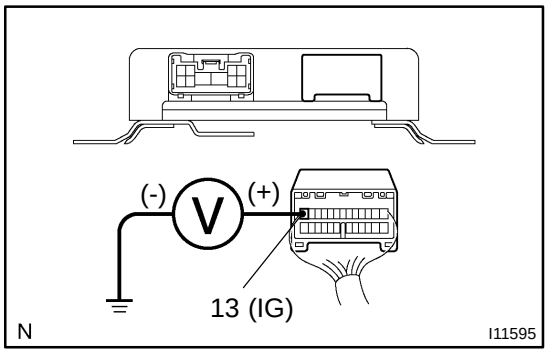

PREPARATION:

Remove Seat Position Control ECU with connectors still connected.

CHECK:

Measure voltage between terminal IG of Seat Position Control ECU connector and body ground when ignition switch is ON and OFF.

OK:

Ignition switch	Voltage
ON	10 ~ 14 V
OFF	0 V

OK → **Proceed to next circuit inspection shown in problem symptom table (See page DI-493).**

NG

2	Check GAUGE fuse.

NG → **Check for short in all the harness and components connected to GAUGE fuse.**

NG

Check and repair harness or connector between Seat Position Control ECU and battery.

DI6KZ-01

Mirror switch circuit

CIRCUIT DESCRIPTION

This circuit detects the conditions of the mirror selection switch and the mirror position switch.

WIRING DIAGRAM

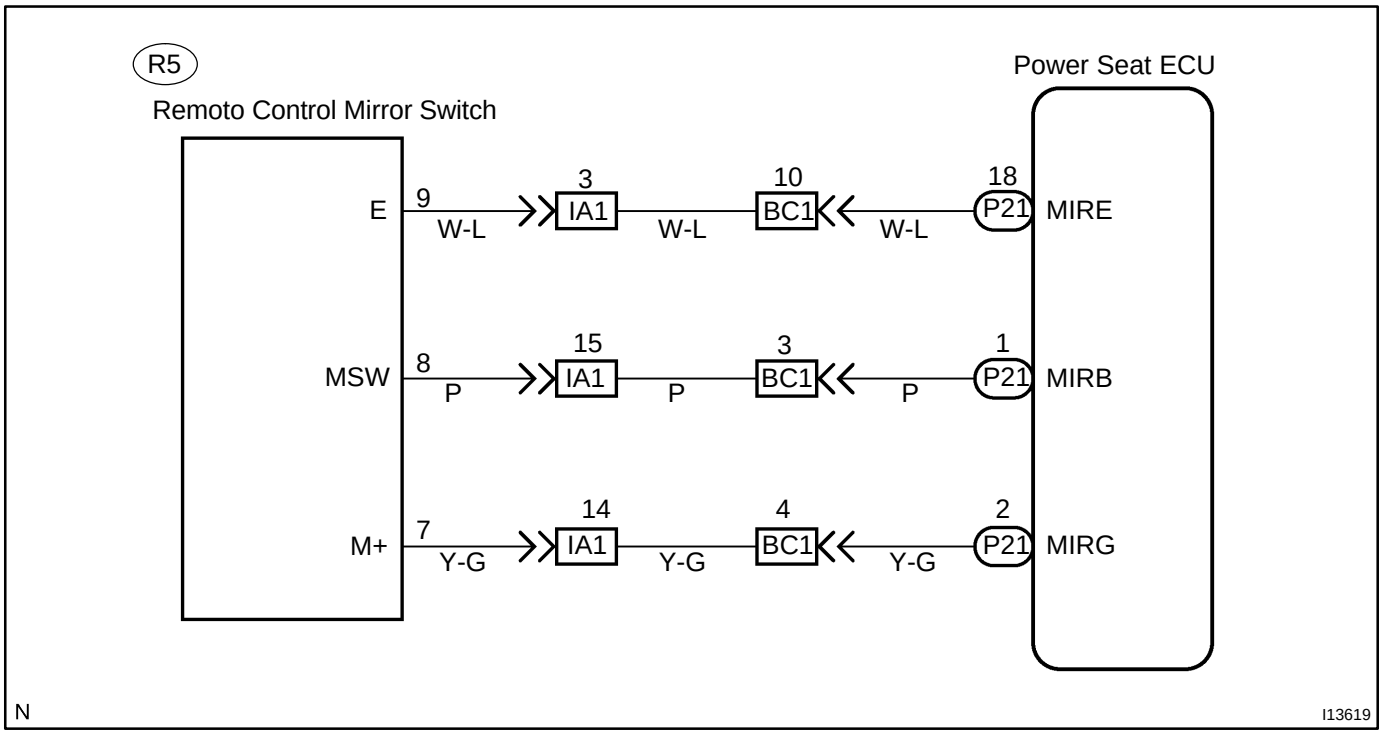

INSPECTION PROCEDURE

1	Check mirror switch (See page BE-114).

NG → Replace the mirror switch.

OK

2	Check wireharness and connector between mirror switch and power seat control ECU.

NG → Repair or replace wireharness or connector.

OK

Proceed to next circuit inspection shown on problem symptoms table (See page DI-493).

DI0G4-08

Motor Circuit

CIRCUIT DESCRIPTION

The Seat Position Control ECU controls the 4 motors for slide, front vertical, rear vertical and reclining.

WIRING DIAGRAM

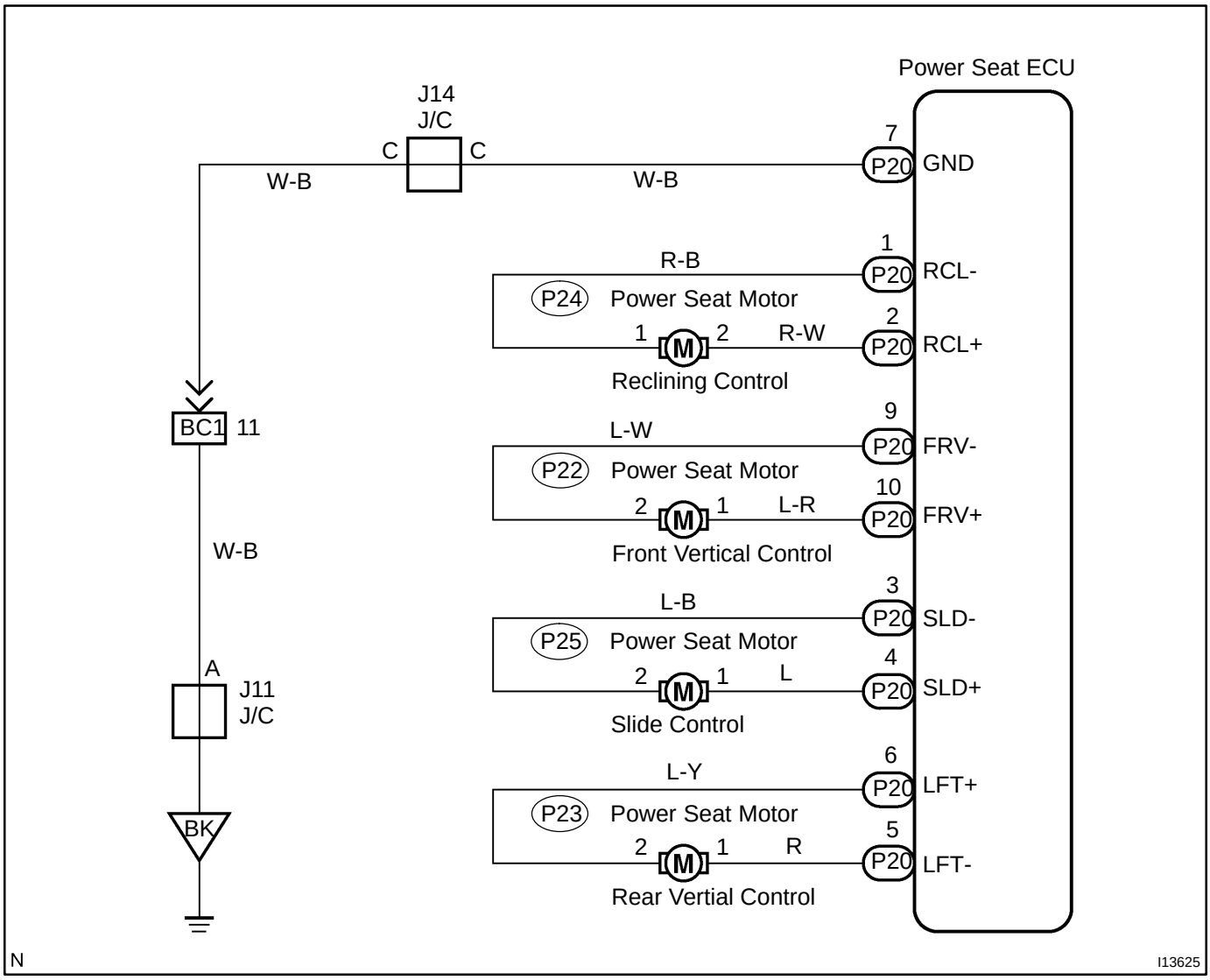

INSPECTION PROCEDURE

1	**Check motor.**

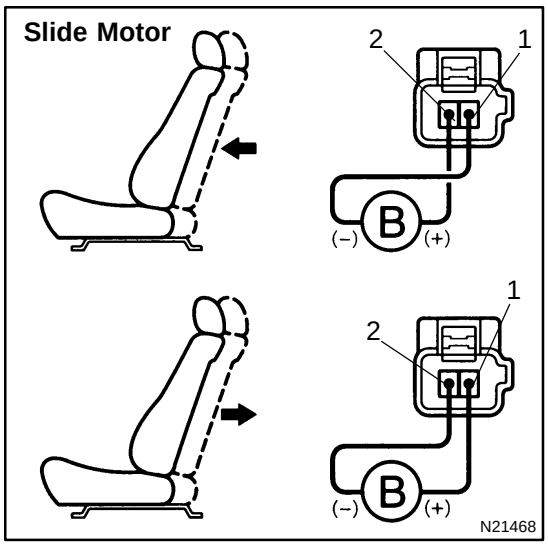

PREPARATION:

(a) Remove seat.

(b) Disconnect each motor connector.

CHECK:

Check seat movement when battery positive voltage is applied to each motor.

Slide Motor

CHECK:

Connect battery ≦ to terminal 2 and battery > to terminal 1 of the slide motor connector.

OK:

The seat moves forward.

CHECK:

Connect battery > to terminal 2 and battery ≦ to terminal 1 of the slide motor connector.

OK:

The seat moves backward.

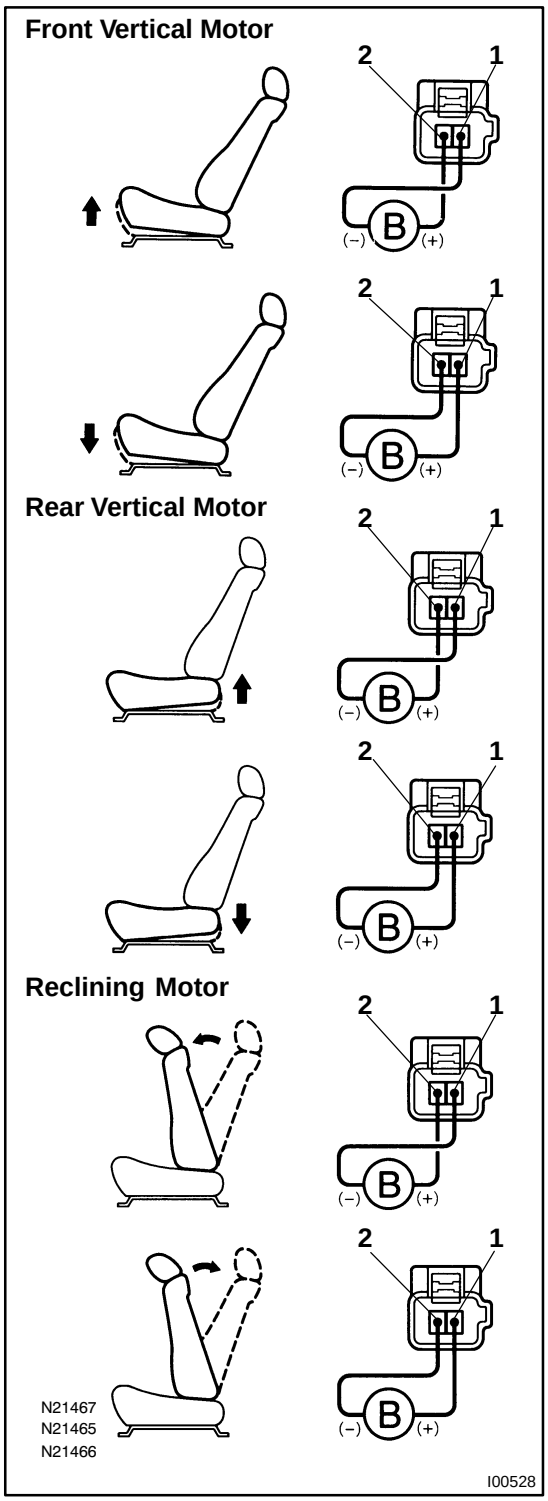

Front Vertical Motor

CHECK:

Connect battery ≦ to terminal 2 and battery > to terminal 1 of the front vertical motor connector.

OK:

The front of the seat cushion rises.

CHECK:

Connect battery > to terminal 2 and battery ≦ to terminal 1 of the front vertical motor connector.

OK:

The front of the seat cushion lowers.

Rear Vertical Motor

CHECK:

Connect battery ≦ to terminal 2 and battery > to terminal 1 of the rear vertical motor connector.

OK:

The front of the seat cushion rises.

CHECK:

Connect battery > to terminal 2 and battery ≦ to terminal 1 of the rear vertical motor connector.

OK:

The front of the seat cushion lowers.

Reclining Motor

CHECK:

Connect battery ≦ to terminal 2 and battery > to terminal 1 of the reclining motor connector.

OK:

The seat back returns to up right.

CHECK:

Connect battery > to terminal 2 and battery ≦ to terminal 1 of the reclining motor connector.

OK:

The seat back is reclining.

NG → **Replace motor.**

OK

2	**Check harness and connector between Seat Position Control ECU and motor (See page DI-489).**

NG → **Repair or replace harness or connector.**

OK

Proceed to next circuit inspection shown on problem symptom table (See page DI-493).

DI0G9-08

Position Sensor Circuit

CIRCUIT DESCRIPTION

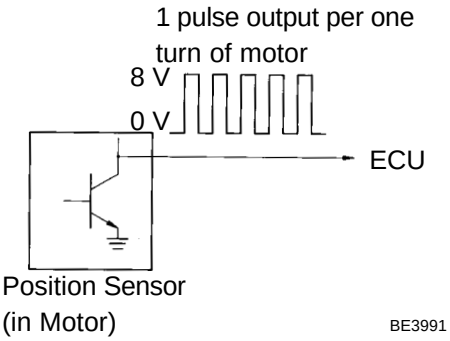

The position sensor senses movement of the seat and send pulse signals to the ECU. The position sensor sends pulse to the ECU in proportion to the amount of seat movement, as shown in the diagram on the left.
The ECU uses the number of pulses to constantly calculate the position relative to the memory position and returns the seat to the memorized position.
If a malfunction occurs in a position sensor and a sensor signal is not input to the ECU even when the motor operates, the ECU prohibits return operation.

WIRING DIAGRAM

See page DI-504 .

INSPECTION PROCEDURE

1	**Check position sensor.**

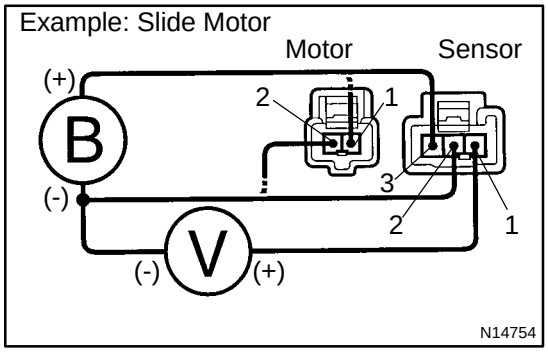

PREPARATION:
Disconnect the connector of the sensor and the connector of the motor leading to the sensor.

CHECK:
(a) Connect positive ≦ lead to terminal 3 of sensor and negative > lead to terminal 2.
(b) Measure voltage between terminal 1 of sensor and body ground when battery positive voltage is applied between terminals 1 and 2 of motor connector.

HINT:
When the battery positive voltage is applied to the motor connector terminals, ≦ and > are interchangeable.

OK:

Condition	Voltage
Motor stopped (Check several times with the motor in a different position each time.)	0 V or battery positive voltage according to stop position.
with motor turning	half of battery positive voltage

NG → **Replace position sensor.**

OK

2	**Check harness and connectors between Seat Position Control ECU and position sensors (See page IN-30).**

NG → **Repair or replace harness or connectors.**

OK ↓

Check and replace Seat Position Control ECU.

DI0G6-09

Position Sensor Power Source Circuit

CIRCUIT DESCRIPTION

This circuit provides power to the slide, front vertical and reclining position sensors.

WIRING DIAGRAM

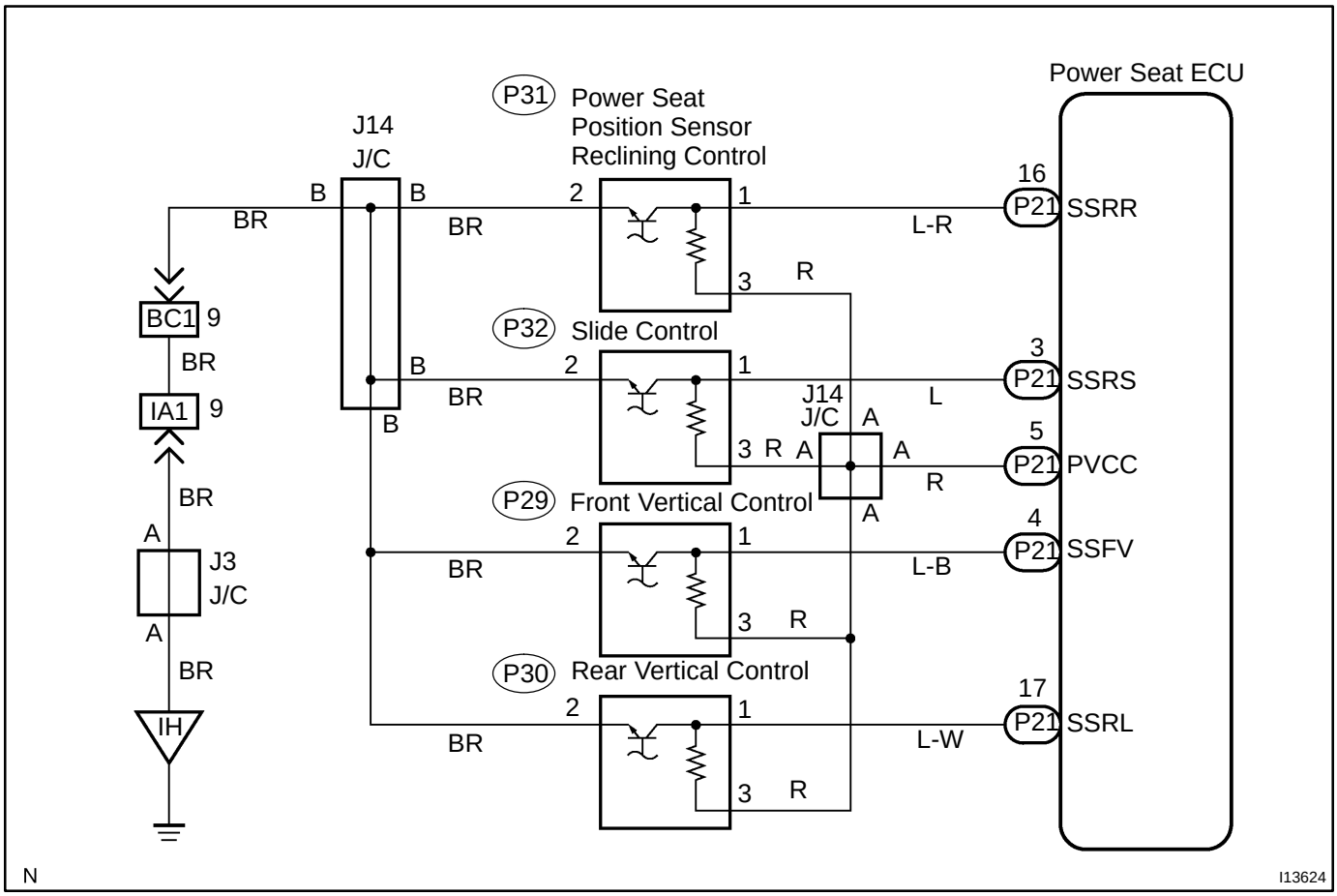

INSPECTION PROCEDURE

1	**Check voltage between terminal PVCC of Seat Position Control ECU connector and body ground.**

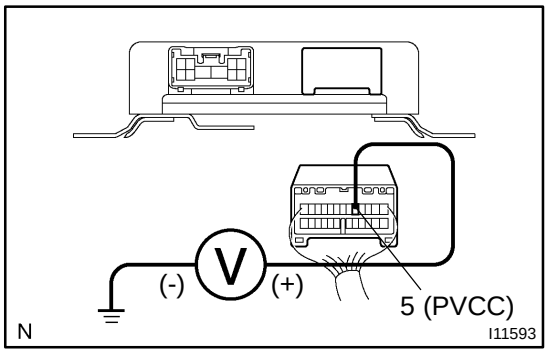

PREPARATION:

Remove Seat Position Control ECU with connectors still connected.

CHECK:

While operating the Power Seat Control Switch and moving the seat, check voltage between terminal PVCC of Seat Position Control ECU connector and body ground.

OK:

Voltage: 7.2 - 8.8 V

OK	**Proceed to next circuit inspection shown on problem symptom table (See page DI-493).**

NG

2	**Check harness and connector connected to terminal PVCC of Seat Position Control ECU (See page IN-30).**

CHECK:

Check for open or short in the harness and check connectors for the position sensor power source circuit outlined in the diagram with a thick line (-).

NG	**Repair or replace harness or connector.**

OK

Check and replace Seat Position Control ECU.

DI0GG-06

Power Seat Control Switch Circuit

CIRCUIT DESCRIPTION

When the power seat control switch is operated, a signal is sent from the power seat control switch to the ECU and the ECU sends a signal to the motor to make it operate.
Even if a malfunction should occur with the position sensor and return operation is prohibited, manual operation will occur as normal.

WIRING DIAGRAM

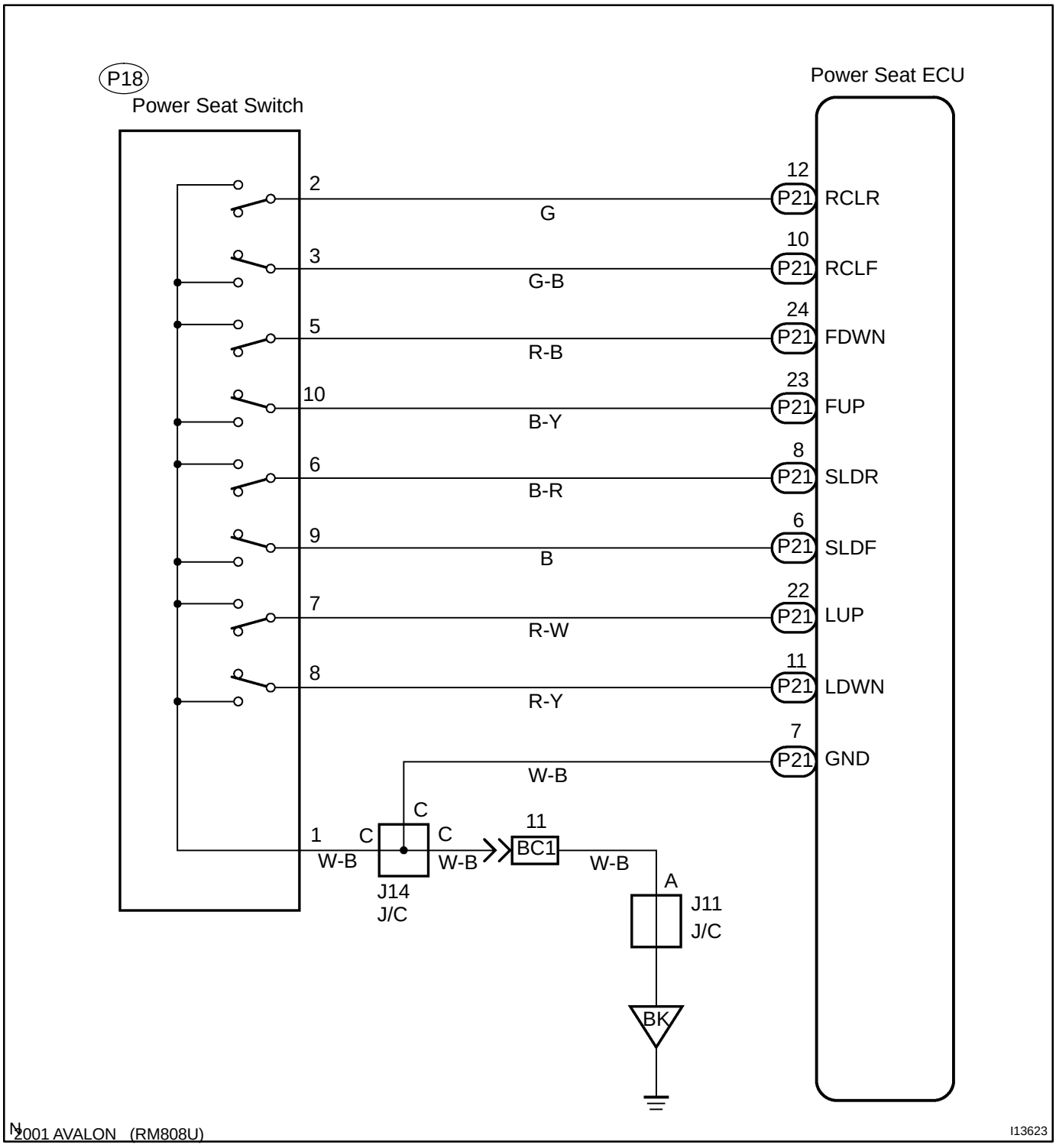

N 2001 AVALON (RM808U)

I13623

INSPECTION PROCEDURE

1	**Check voltage between each terminal of the Power Seat Control Switch and SGND of Seat Position Control ECU connector.**

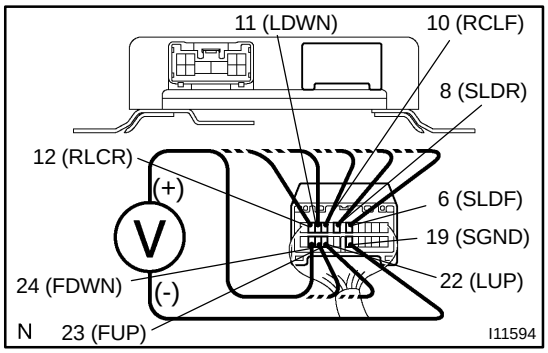

PREPARATION:

Remove Seat Position Control ECU with connectors still connected.

CHECK:

Measure voltage between each terminal of the Power Seat Control Switch and SGND of Seat Position Control ECU connector. (The illustration shows inspection of the reclining as an example.)

OK:

At each terminal with switch ON	0 V
At each terminal with switch OFF	10 ~ 14 V

OK → **Proceed to next circuit inspection shown in problem symptom table (See page DI-493).**

NG

2	**Check power seat control switch.**

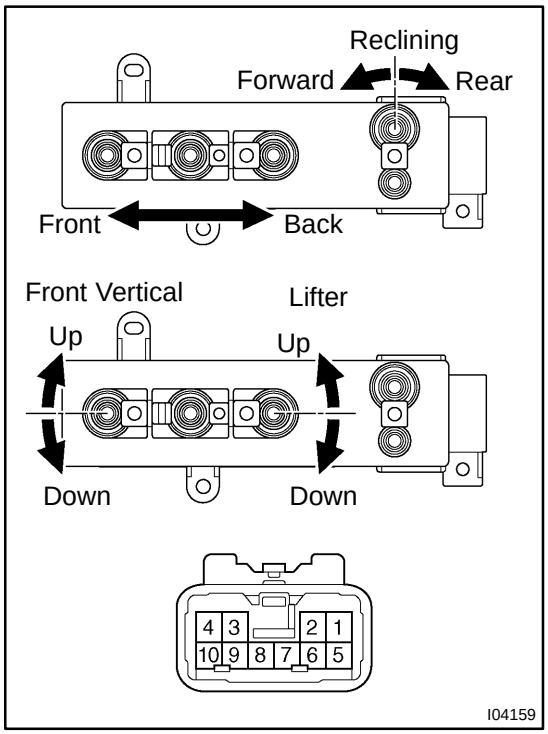

PREPARATION:

(a) Remove seat.

(b) Disconnect power seat control switch.

CHECK:

Check continuity between terminals when switch operated.

OK:

Driver's seat slide switch:

Switch position	Tester connection	Specified condition
FRONT	1 - 9	Continuity
BACK	1 - 6	Continuity

Driver's seat front vertical switch:

Switch position	Tester connection	Specified condition
UP	1 - 5	Continuity
DOWN	1 - 10	Continuity

Driver's seat lifter switch:

Switch position	Tester connection	Specified condition
UP	1 - 8	Continuity
DOWN	1 - 7	Continuity

Driver's seat reclining switch:

Switch position	Tester connection	Specified condition
FORWARD	1 - 3	Continuity
REAR	1 - 2	Continuity

Passenger's slide switch:

Switch position	Tester connection	Specified condition
FRONT	1 - 9	Continuity
BACK	1 - 6	Continuity

Passenger's front vertical switch:

Switch position	Tester connection	Specified condition
UP	1 - 10	Continuity
DOWN	1 - 5	Continuity

Passenger's lifter switch:

Switch position	Tester connection	Specified condition
UP	1 - 7	Continuity
DOWN	1 - 8	Continuity

Passenger's reclining switch:

Switch position	Tester connection	Specified condition
FORWARD	1 - 3	Continuity
REAR	1 - 2	Continuity

NG → **Replace power seat control switch.**

OK

3	**Check harness and connectors between Seat Position Control ECU and power seat control switch (See page IN-30).**

NG → **Repair or replace harness or connector.**

OK

Check and replace Seat Position Control ECU.

DI0GH-06

Seat Memory Switch

CIRCUIT DESCRIPTION

Seat memory switch send memory and return signals to the seat position control ECU.

WIRING DIAGRAM

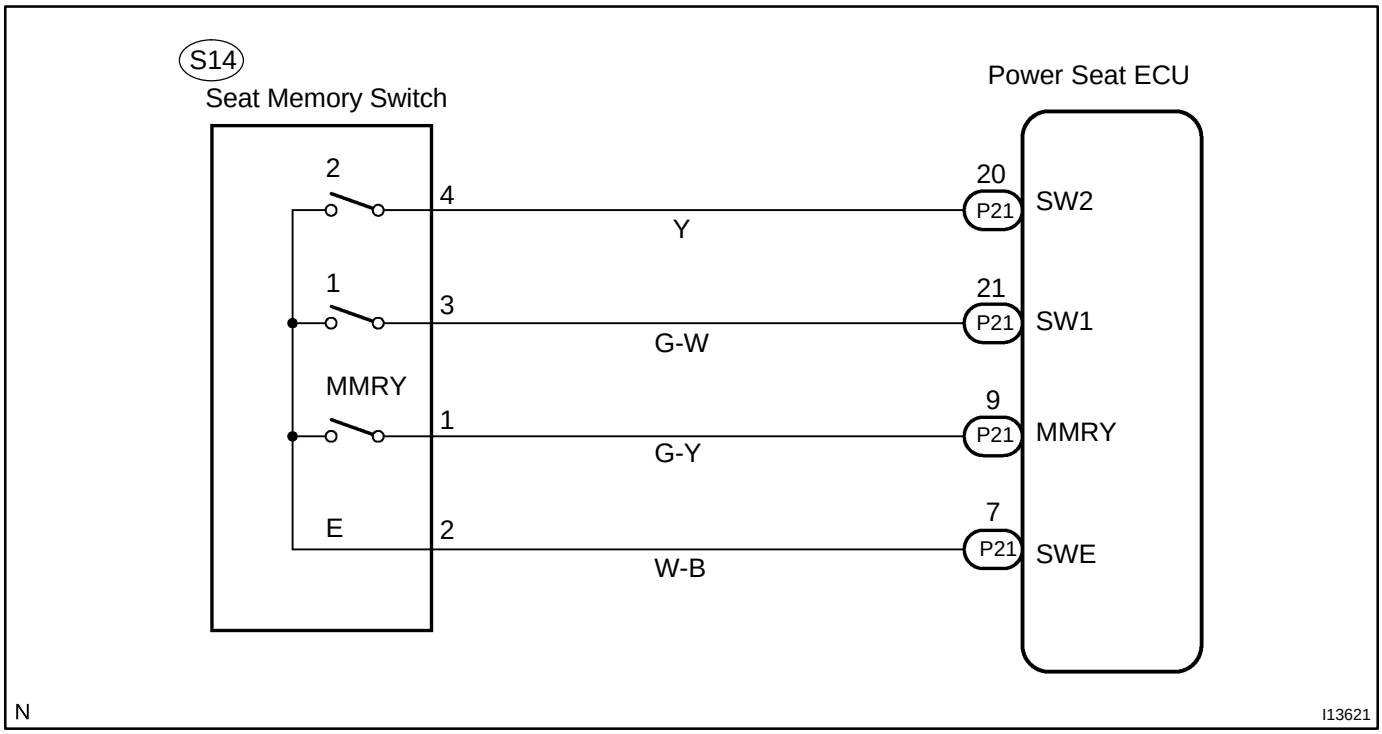

INSPECTION PROCEDURE

1	**Check voltage between each terminal of the seat memory switch and SGND of Seat Position Control ECU connector.**

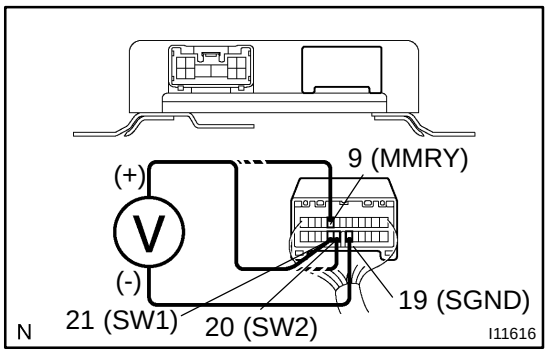

PREPARATION:

Remove Seat Position Control ECU with connectors still connected.

CHECK:

Measure voltage between terminal of the seat memory switch and SGND of Seat Position Control ECU connector.

(The illustration shows inspection of the Memory 1 as an example.)

OK:

At each terminal with switch ON	0 V
At each terminal with switch OFF	10 ~ 14 V

OK	**Proceed to next circuit inspection shown in problem symptom table (See page DI-493).**

NG

2	**Check seat memory switch.**

(Example)
Inspection of SET Switch

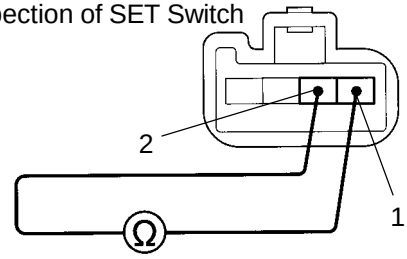

PREPARATION:
Disconnect seat memory switch connector.
CHECK:
Check continuity of each terminal.
OK:

Switch position	Terminal
SET switch ON	1 - 2
Memory switch 1	2 - 3
Memory switch 2	2 - 4

NG → **Replace seat memory switch.**

OK

3	**Check harness and connectors between Seat Position Control ECU and seat memory switch (See page IN-30).**

NG → **Repair or replace harness or connector.**

OK

Check and replace Seat Position Control ECU.

DI0FR-06

CUSTOMER PROBLEM ANALYSIS CHECK

POWER SEAT CONTROL SYSTEM Check Sheet

Inspector's name: _____

Customer's Name		**Registration No.**	
		Registration Year	
		Frame No.	
Date of Vehicle Brought in	/ /	**Odometer Reading**	**km Mile**

Date Problem First Occurred	/ /
How Often Problem Occurs	● Continuous ● Intermittent (Times a day)

Problem Symptom	● Manual Function does not operate.	● Slide ● Front Vertical ● Rear Vertical ● Reclining
	● Return Function does not operate.	● Slide ● Front Vertical ● Rear Vertical ● Does not operate in any conditions ● Only with key inserted ● Only with key not inserted ● Only with memory & return switch 1 or 2
	● Memory function does not operate.	
	● Position return function does not stop when brake pedal is depressed.	

POWER SEAT CONTROL SYSTEM (w/ Driving Position Memory)

DI0FP-07

HOW TO PROCEED WITH TROUBLESHOOTING

Perform troubleshooting in accordance with the procedure on the following page.

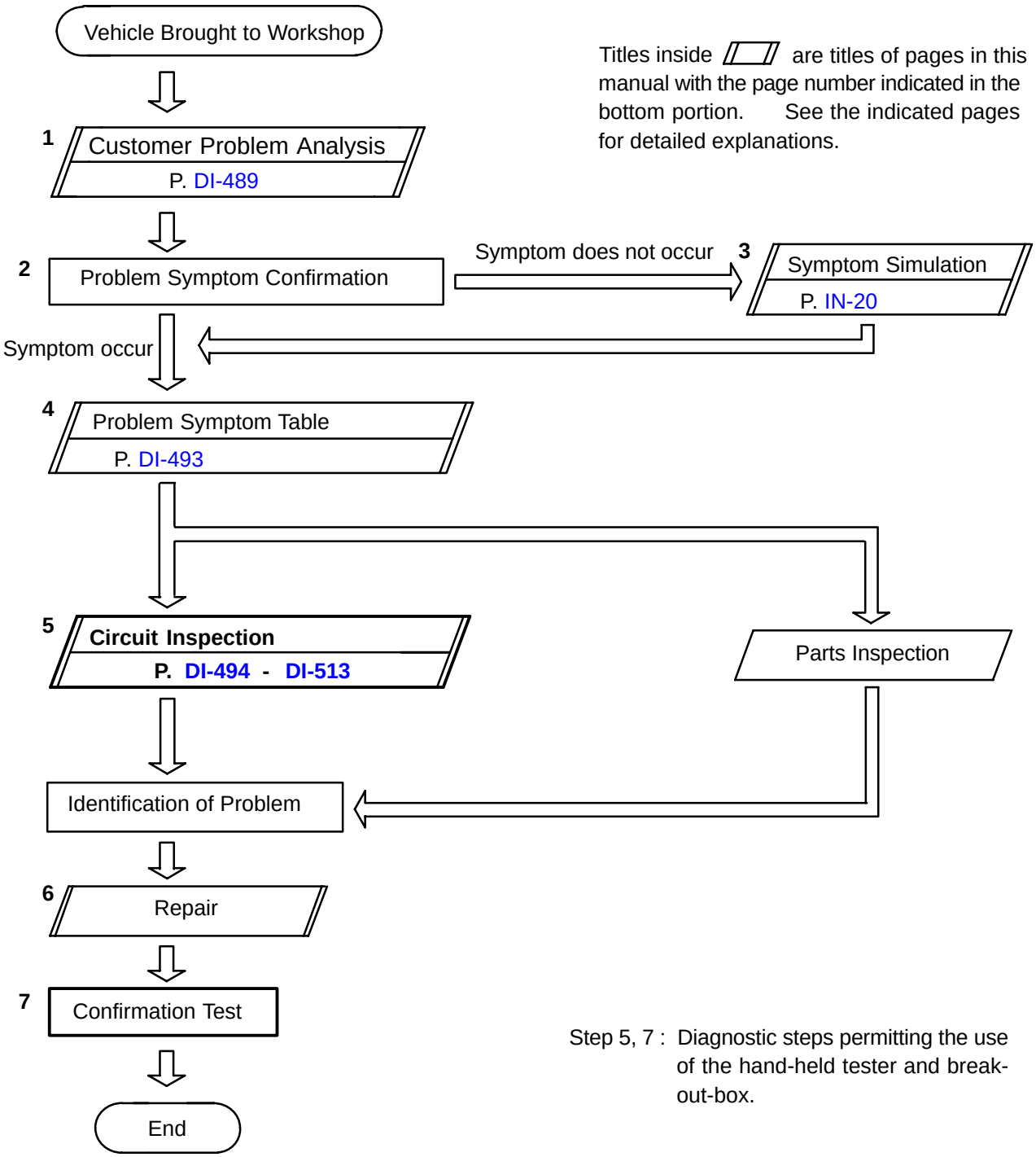

Titles inside ▱ are titles of pages in this manual with the page number indicated in the bottom portion. See the indicated pages for detailed explanations.

Step 5, 7 : Diagnostic steps permitting the use of the hand-held tester and break-out-box.

DI0FT-05

PARTS LOCATION

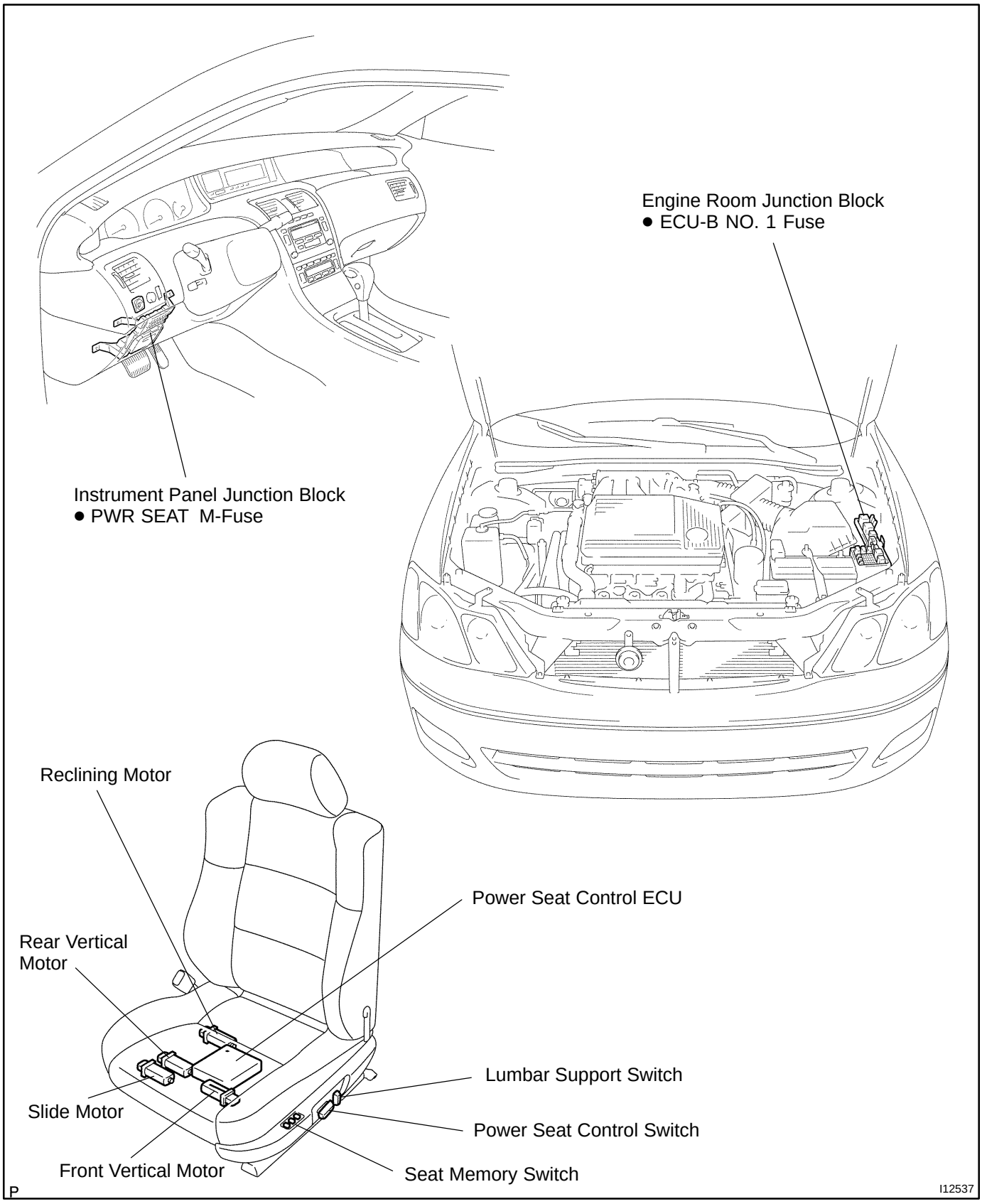

DI0FV-08

PROBLEM SYMPTOMS TABLE

Perform troubleshooting of the circuits for the applicable problem symptom in the order given in the chart below. Proceed to the page located for each circuit.

HINT:

- If the instruction ”Proceed to next circuit inspection shown on problem symptom table” is given in the flow chart for each circuit, proceed to the circuit with the next highest number in the table to continue the check.
- If the trouble still reappears even though there are no abnormalities in any of the other circuits, then check and replace the Seat Position Control ECU as the last step.

Symptom	Suspect Area	See page
Both manual & return functions do not operate(All functions).	3. +B power source circuit 4. Power seat control switch circuit 5. Motor circuit 6. Power seat control ECU	DI-494 DI-510 DI-500 IN-30
Both manual & return functions do not operate(One function only).	1. Motor circuit 2. Power seat control ECU	DI-500 IN-30
One or all functions do not operate for manual operation only.	1. Power seat control switch circuit 2. Power seat control ECU	DI-510 IN-30
Memory function does not operate.	1. Power seat memory switch circuit 2. Ignition switch circuit 3. Power seat control ECU	DI-510 DI-508 IN-30
Return operation does not stop when brake pedal is depressed.	1. Stop light switch circuit 2. Power seat control ECU	DI-662 IN-30
Only return function does not operate or operates a little, then stops (All return functions).	1. Power seat memory switch circuit 2. ECU power source circuit 3. Position sensor power source circuit 4. Power seat control ECU	DI-513 DI-497 DI-504 IN-30
Only return function does not operate or operates a little, then stops (Only one return function).	1. Position sensor circuit 2. Power seat control ECU	DI-506 IN-30

DI6KY-01

TERMINALS OF ECU

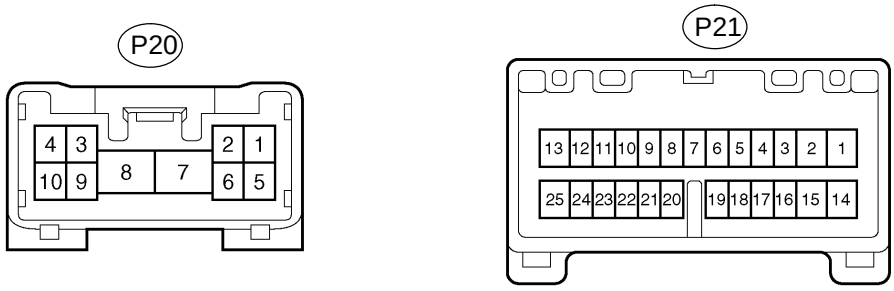

N

I11581

Symbols (Terminals No.)	Wiring Color	Condition	STD Voltage (V)
SSFV ↔ SGND (P21-4 ↔ P21-19)	L-B ↔ BR	Front vertical operation	0 V ↔ 8 V
SSRL ↔ SGND (P21-17 ↔ P21-19)	L-W ↔ BR	Rear vertical operation	0 V ↔ 8 V
SSRR ↔ SGND (P21-16↔ P21-19)	L-R ↔ BR	Reclining operation	0 V ↔ 8 V
PVCC ↔ SGND (P21-5 ↔ P21-19)	R ↔ BR	Power seat operation	8 V
FDWN ↔ Body Ground (P21-24 ↔ Body Ground)	R-B	Seat lowered using front vertical SW	Below 1 V
		Others	10 - 14 V
IG ↔ Body Ground (P21-13 ↔ Body Ground)	R-B	Ignition SW ON	10 - 14 V
SYSB ↔ Body Ground (P21-25 ↔ Body Ground)	W-G	Always	10 - 14 V
MPX1 ↔ Body Ground (P21-14 ↔ Body Ground)	G-W	Multiplex communication circuit signals	0 V ↔ 12 V
		Others	Resistance (Approx. 2.5 kΩ)
SGND ↔ Body Ground (P21-19 ↔ Body Ground)	BR	Always	Below 1 V
SSRS ↔ SGND (P21-3 ↔ P21-19)	L ↔ BR	Slide operation	0 V ↔ 8 V
SLDF ↔ Body Ground (P21-6 ↔ Body Ground)	B	Seat moved forward using slide SW	Below 1 V
		Others	10 - 14 V
SLDR ↔ Body Ground (P21-8 ↔ Body Ground)	B-R	Seat moved to rear using slide SW	Below 1 V
		Others	10 - 14 V
LUP ↔ Body Ground (P21-22 ↔ Body Ground)	R-W	Seat raised using rear vertical SW	Below 1 V
		Others	10 - 14 V
LDWN ↔ Body Ground (P21-11 ↔ Body Ground)	R-Y	Seat lowered using rear vertical SW	Below 1 V
		Others	10 - 14 V
FUP ↔ Body Ground (P21-23 ↔ Body Ground)	B-Y	Seat raised using front vertical SW	Below 1 V
		Others	10 - 14 V
RCLF ↔ Body Ground (P21-10 ↔ Body Ground)	G-B	Seat moved forward using reclining SW	Below 1 V
		Others	10 - 14 V
RCLR ↔ Body Ground (P21-12 ↔ Body Ground)	G	Seat moved to rear using reclining SW	Below 1 V
		Others	10 - 14 V
RCL- ↔ GND (P20-1 ↔ P20-7)	R-B ↔ W-B	Seat moved to rear using reclining SW	10 - 14 V
		Others	Below 1 V

RCL+ ↔ GND (P20-2 ↔ P20-7)	R-W ↔ W-B	Seat moved forward using reclining SW	10 - 14 V
		Others	Below 1 V
SLD- ↔ GND (P20-3 ↔ P20-7)	L-B ↔ W-B	Seat moved to rear using slide SW	10 - 14 V
		Others	Below 1 V
SLD+ ↔ GND (P20-4 ↔ P20-7)	L ↔ W-B	Seat moved forward using slide SW	10 - 14 V
		Others	Below 1 V
LFT- ↔ GND (P20-5 ↔ P20-7)	R ↔ W-B	Seat lowered using rear vertical SW	10 - 14 V
		Others	Below 1 V
LFT+ ↔ GND (P20-6 ↔ P20-7)	L-Y ↔ W-B	Seat raised using rear vertical SW	10 - 14 V
		Others	Below 1 V
GND ↔ Body Ground (P20-7 ↔ Body Ground)	W-B	Always	Below 1 V
+B ↔ Body Ground (P20-8 ↔ Body Ground)	L-O	Always	10 - 14 V
FRV- ↔ GND (P20-9 ↔ P20-7)	L-W ↔ W-B	Seat lowered using front vertical SW	10 - 14 V
		Others	Below 1 V
FRV+ ↔ GND (P20-10 ↔ P20-7)	L-R ↔ W-B	Seat raised using front vertical SW	10 - 14 V
		Others	Below 1 V
MMRY ↔ SWE (P21-9 ↔ P21-7)	G-Y ↔ W-B	Set switch position is OFF.	10 - 14 V
		Set switch position is ON.	Below 1 V
SW1 ↔ SWE (P21-21 ↔ P21-7)	G-W ↔ W-B	Memory Switch 1 position is OFF.	10 - 14 V
		Memory Switch 1 position is ON.	Below 1 V
SW2 ↔ SWE (P21-20 ↔ P21-7)	Y ↔ W-B	Memory Switch 2 position is OFF.	10 - 14 V
		Memory Switch 2 position is ON.	Below 1 V

DI4CK-03

CIRCUIT INSPECTION

DTC	B0100/13	Short in D Squib Circuit

CIRCUIT DESCRIPTION

The D squib circuit consists of the airbag sensor assembly, spiral cable and steering wheel pad.
It causes the airbag to deploy when the airbag deployment conditions are satisfied.
For details of the function of each component, see OPERATION on page RS-3 .
DTC B0100/13 is recorded when a short is detected in the D squib circuit.

DTC No.	DTC Detecting Condition	Trouble Area
B0100/13	●Short circuit between D+ wire harness and D- wire harness of squib ●D squib malfunction ●Spiral cable malfunction ●Airbag sensor assembly malfunction	●Steering wheel pad (D squib) ●Spiral cable ●Airbag sensor assembly ●Wire harness

WIRING DIAGRAM

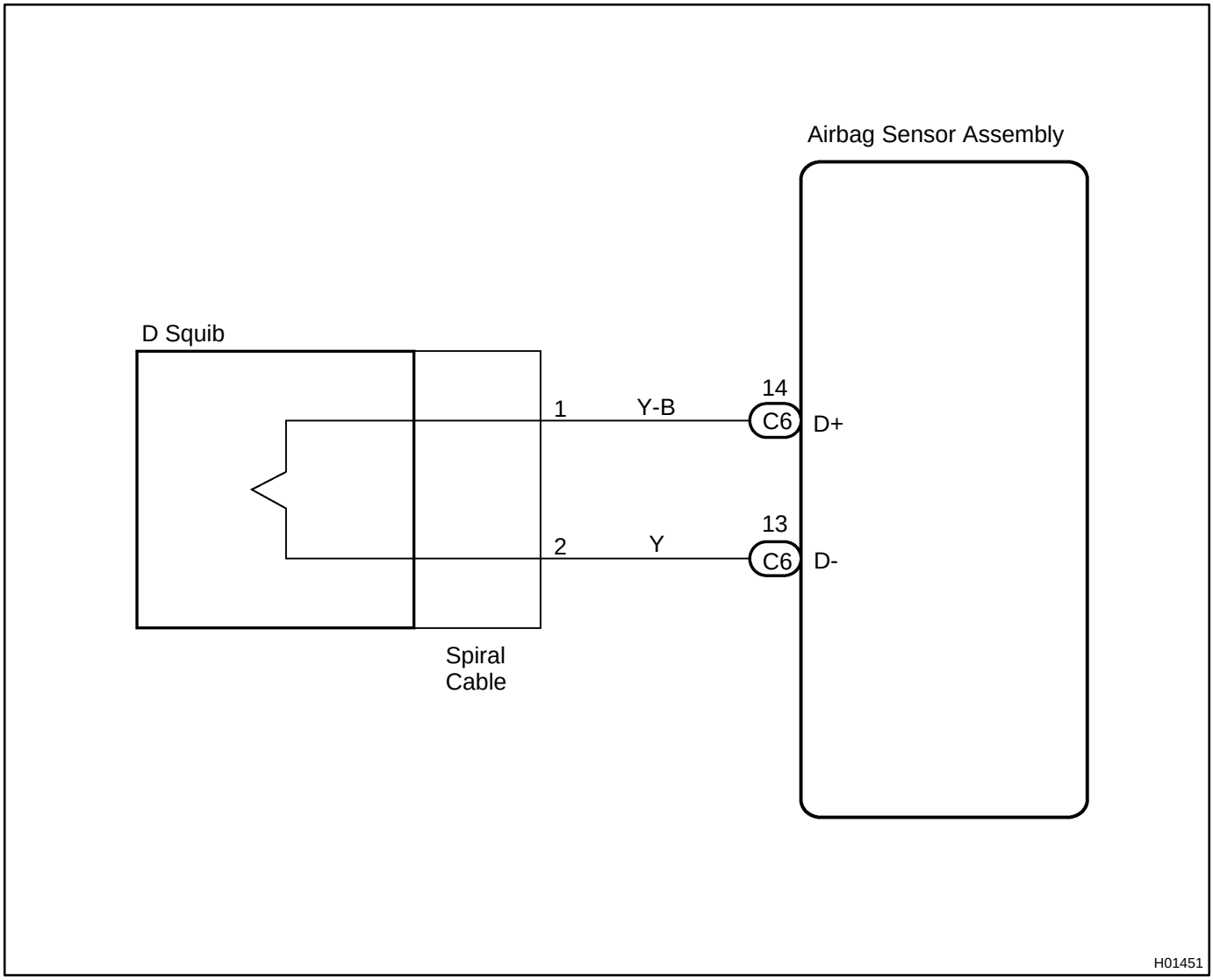

INSPECTION PROCEDURE

1	**Prepare for inspection (See step 1 on page DI-475).**

2	**Check D squib circuit.**

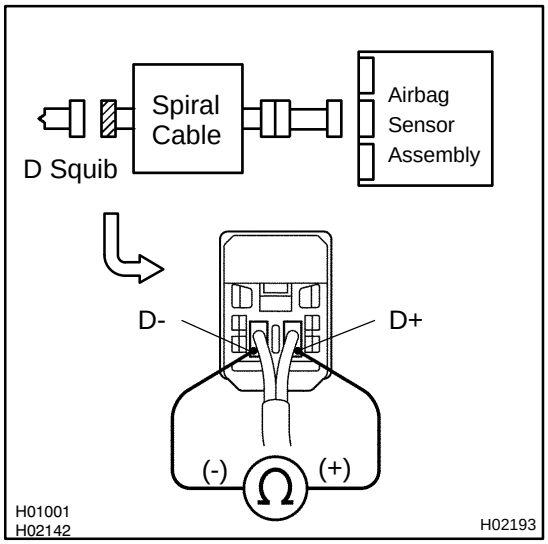

PREPARATION:

Release the airbag activation prevention mechanism of the connector (on the airbag sensor assembly side) between the airbag sensor assembly and the spiral cable (See page DI-349).

CHECK:

For the connector (on the spiral cable side) between the spiral cable and the steering wheel pad, measure the resistance between D+ and D-.

OK:

Resistance: 1 MΩ or Higher

NG → **Go to step 5.**

OK

3	Check airbag sensor assembly.

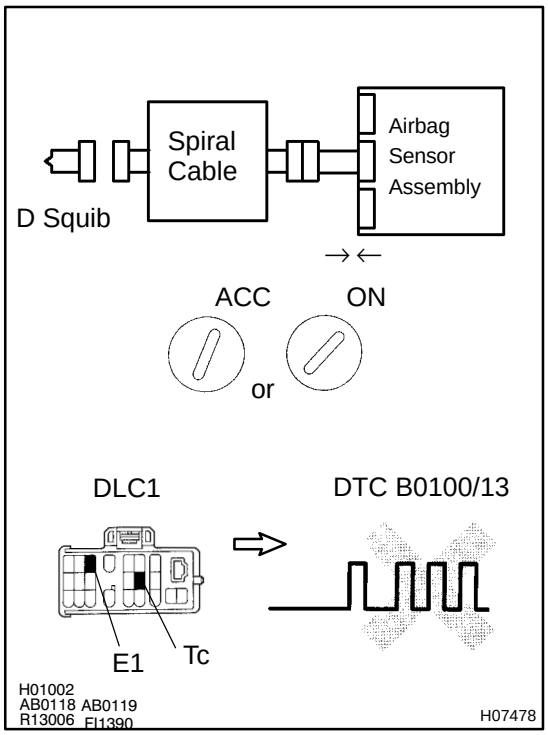

PREPARATION:

(a) Connect the connector to the airbag sensor assembly.
(b) Connect negative (-) terminal cable to the battery, and wait at least for 2 seconds.

CHECK:

(a) Turn the ignition switch to ACC or ON and wait at least for 20 seconds.
(b) Clear the DTC stored in memory (See page DI-349).
(c) Turn the ignition switch to LOCK, and wait at least for 20 seconds.
(d) Turn the ignition switch to ACC or ON, and wait at least for 20 seconds.
(e) Check the DTC (See page DI-349).

OK:

DTC B0100/13 is not output.

HINT:
Codes other than code B0100/13 may be output at this time, but they are not relevant to this check.

NG → **Replace airbag sensor assembly.**

OK

4	Check D squib.

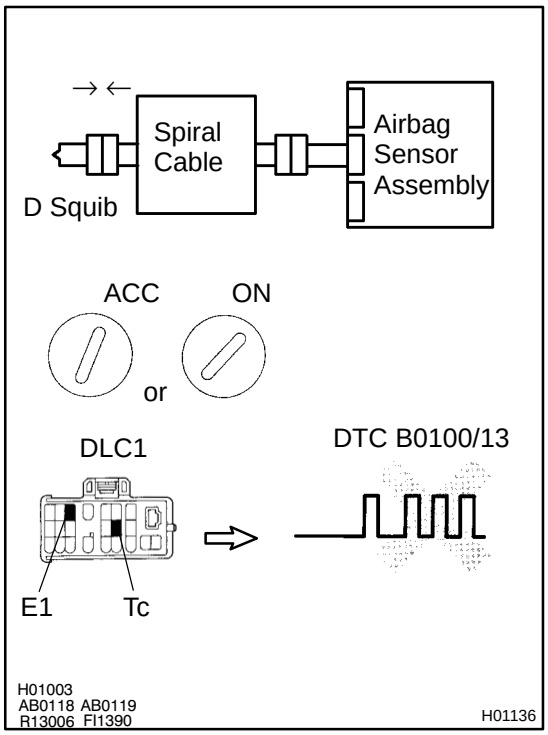

PREPARATION:

(a) Turn the ignition switch to LOCK.
(b) Disconnect negative (-) terminal cable from the battery, and wait at least for 90 seconds.
(c) Connect the steering wheel pad connector.
(d) Connect negative (-) terminal cable to the battery, and wait at least for 2 seconds.

CHECK:

(a) Turn the ignition switch to LOCK, and wait at least for 20 seconds.
(b) Turn the ignition switch to ACC or ON, and wait at least for 20 seconds.
(c) Clear the DTC stored in memory (See page DI-349).
(d) Turn the ignition switch to LOCK, and wait at least for 20 seconds.
(e) Turn the ignition switch to ACC or ON, and wait at least for 20 seconds.
(f) Check the DTC (See page DI-349).

OK:

DTC B0100/13 is not output.

HINT:

Codes other than code B0100/13 may be output at this time, but they are not relevant to this check.

NG → **Replace steering wheel pad.**

OK

From the results of the above inspection, the malfunctioning part can now be considered normal. To make sure of this, use the simulation method to check.

5	Check spiral cable.

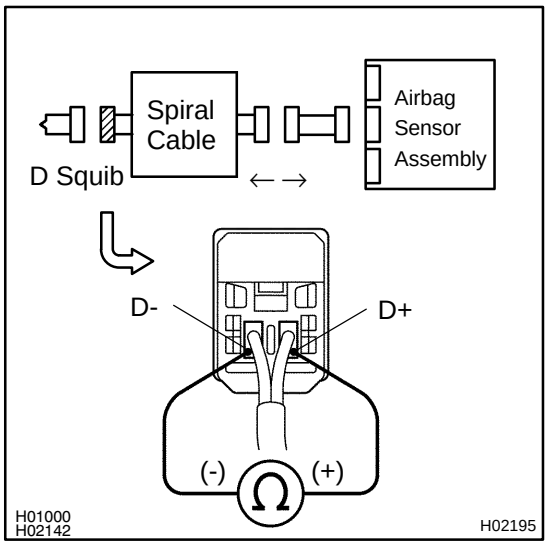

PREPARATION:

(a) Disconnect the connector between the airbag sensor assembly and the spiral cable.

(b) Release the airbag activation prevention mechanism of the spiral cable connector on the airbag sensor assembly side (See page DI-349).

CHECK:

For the connector (on the spiral cable side) between the spiral cable and the steering wheel pad, measure the resistance between D+ and D-.

OK:

Resistance: 1 MΩ or Higher

NG	Repair or replace spiral cable.

OK

6	Check harness between airbag sensor assembly and spiral cable.

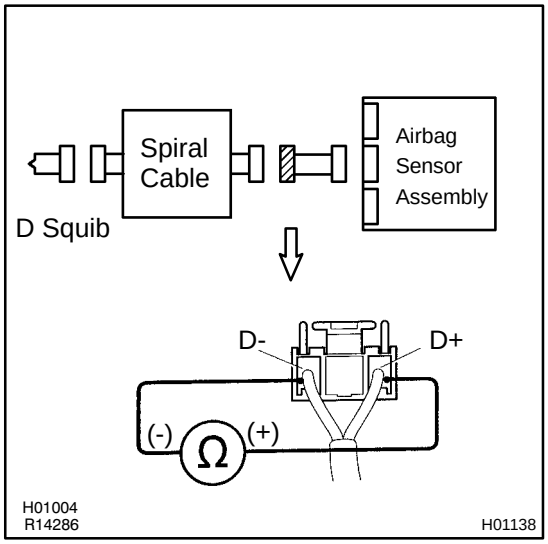

PREPARATION:

Release the airbag activation prevention mechanism of the connector (on the airbag sensor assembly side) between the airbag sensor assembly and the spiral cable (See page DI-349).

CHECK:

For the connector (on the spiral cable side) between the airbag sensor assembly and the spiral cable, measure the resistance between D+ and D-.

OK:

Resistance: 1 MΩ or Higher

NG	Repair or replace harness or connector between airbag sensor assembly and spiral cable.

OK

From the results of the above inspection, the malfunctioning part can now be considered normal. To make sure of this, use the simulation method to check.

DI4CL-02

DTC	B0101/14	Open in D Squib Circuit

CIRCUIT DESCRIPTION

The D squib circuit consists of the airbag sensor assembly, spiral cable and steering wheel pad.
It causes the airbag to deploy when the airbag deployment conditions are satisfied.
For details of the function of each components, see OPERATION on page RS-3 .
DTC B0101/14 is recorded when an open is detected in the D squib circuit.

DTC No.	DTC Detecting Condition	Trouble Area
B0101/14	●Open circuit in D+ wire harness or D- wire harness of squib ●D squib malfunction ●Spiral cable malfunction ●Airbag sensor assembly malfunction	●Steering wheel pad (D squib) ●Spiral cable ●Airbag sensor assembly ●Wire harness

WIRING DIAGRAM

See page DI-362 .

INSPECTION PROCEDURE

1	**Prepare for inspection. (See step 1 on page DI-475)**

2	**Check D squib circuit.**

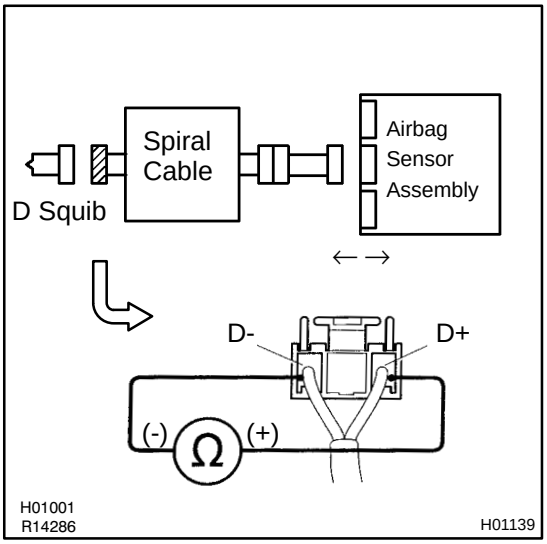

CHECK:

For the connector (on the spiral cable side) between the spiral cable and the steering wheel pad, measure the resistance between D+ and D-.

OK:

Resistance: Below 1 Ω

NG → **Go to step 5.**

OK

3	Check airbag sensor assembly.

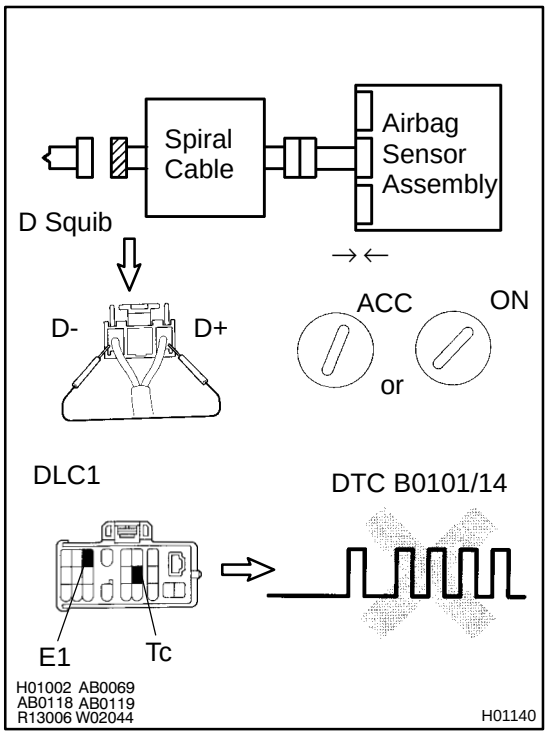

PREPARATION:

(a) Connect the connector to the airbag sensor assembly.
(b) Using a service wire, connect D+ and D- of the connector (on the spiral cable side) between the spiral cable and the steering wheel pad.
(c) Connect negative (-) terminal cable to the battery, and wait at least for 2 seconds.

CHECK:

(a) Turn ignition switch to ACC or ON, and wait at least for 20 seconds.
(b) Clear DTC stored in memory (See page DI-349).
(c) Turn ignition switch to LOCK, and wait at least for 20 seconds.
(d) Turn ignition switch to ACC or ON, and wait at least for 20 seconds.
(e) Check DTC (See page DI-349).

OK:

DTC B0101/14 is not output.

HINT:

Codes other than code B0101/14 may be output at this time, but they are not relevant to this check.

NG	Replace airbag sensor assembly.

OK

4	Check D squib.

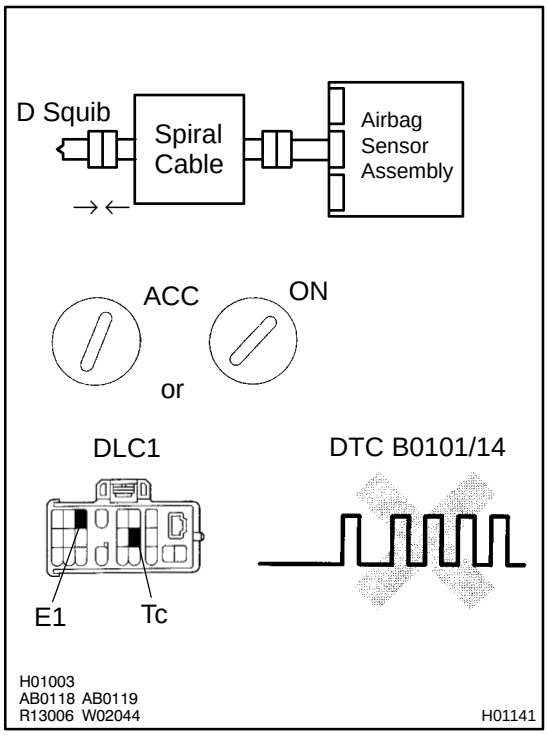

PREPARATION:

(a) Turn ignition switch to LOCK.
(b) Disconnect negative (-) terminal cable from the battery, and wait at least for 90 seconds.
(c) Connect the steering wheel pad connector.
(d) Connect negative (-) terminal cable to the battery, and wait at least for 2 seconds.

CHECK:

(a) Turn ignition switch to ACC or ON, and wait at least for 20 seconds.
(b) Clear DTC stored in memory (See page DI-349).
(c) Turn ignition switch to LOCK, and wait at least for 20 seconds.
(d) Turn ignition switch to ACC or ON, and wait at least for 20 seconds.
(e) Check DTC (See page DI-349).

OK:

DTC B0101/14 is not output.

HINT:

Codes other than code B0101/14 may be output at this time, but they are not relevant to this check.

NG	Replace steering wheel pad.

OK

From the results of the above inspection, the malfunctioning part can now be considered normal. To make sure of this, use the simulation method to check.

5	Check spiral cable.

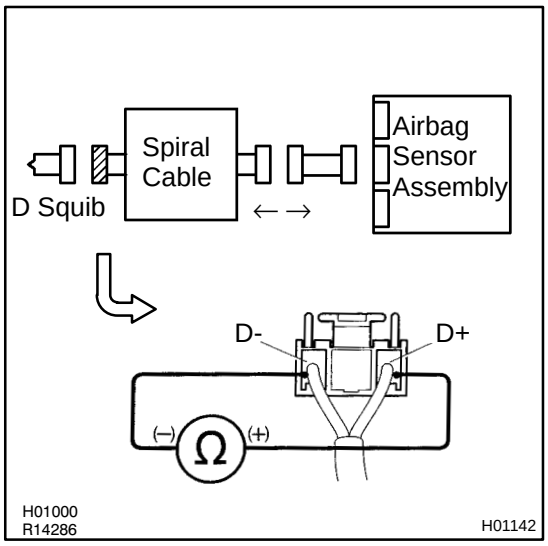

PREPARATION:
Disconnect the connector between the airbag sensor assembly and the spiral cable.

CHECK:
For the connector (on the spiral cable side) between the spiral cable and the steering wheel pad, measure the resistance between D+ and D-.

OK:

Resistance: Below 1 Ω

NG → **Repair or replace spiral cable.**

OK

6	Check harness between airbag sensor assembly and spiral cable.

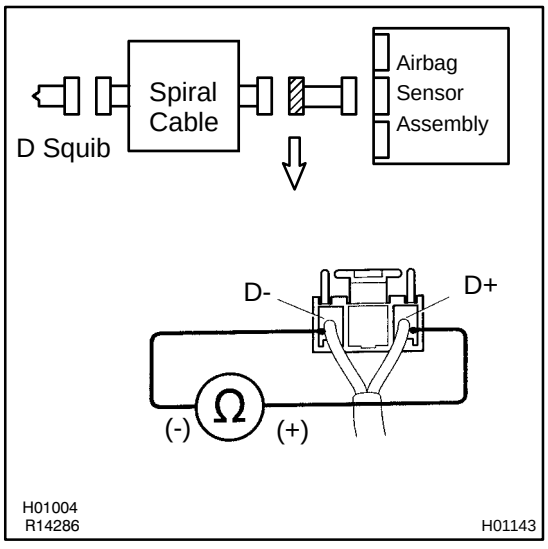

CHECK:
For the connector (on the spiral cable side) between the airbag sensor assembly and the spiral cable, measure the resistance between D+ and D-.

OK:

Resistance: Below 1 Ω

NG → **Repair or replace harness or connector between airbag sensor assembly and spiral cable.**

OK

From the results of the above inspection, the malfunctioning part can now be considered normal. To make sure of this, use the simulation method to check.

DI4DM-02

DTC	B0102/11	Short in D Squib Circuit (to Ground)

CIRCUIT DESCRIPTION

The D squib circuit consists of the airbag sensor assembly, spiral cable and steering wheel pad.
It causes the SRS to deploy when the SRS deployment conditions are satisfied.
For details of the function of each component, see OPERATION on page RS-3 .
DTC B0102/11 is recorded when a ground short is detected in the D squib circuit.

DTC No.	DTC Detecting Condition	Trouble Area
B0102/11	●Short circuit in D squib wire harness (to ground) ●D squib malfunction ●Spiral cable malfunction ●Airbag sensor assembly malfunction	●Steering wheel pad (D squib) ●Spiral cable ●Airbag sensor assembly ●Wire harness

WIRING DIAGRAM

See page DI-362 .

INSPECTION PROCEDURE

1	**Prepare for inspection (See step 1 on page DI-475).**

2	**Check D squib circuit.**

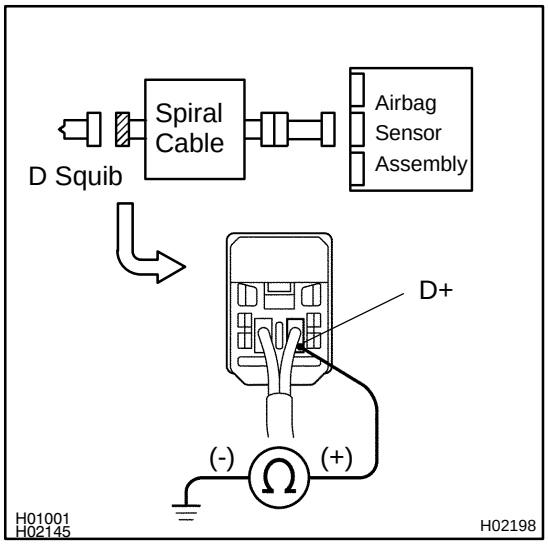

CHECK:

For the connector (on the spiral cable side) between the spiral cable and the steering wheel pad, measure the resistance between D+ and body ground.

OK:

Resistance: 1 MΩ or Higher

NG → **Go to step 5.**

OK

3	Check airbag sensor assembly.

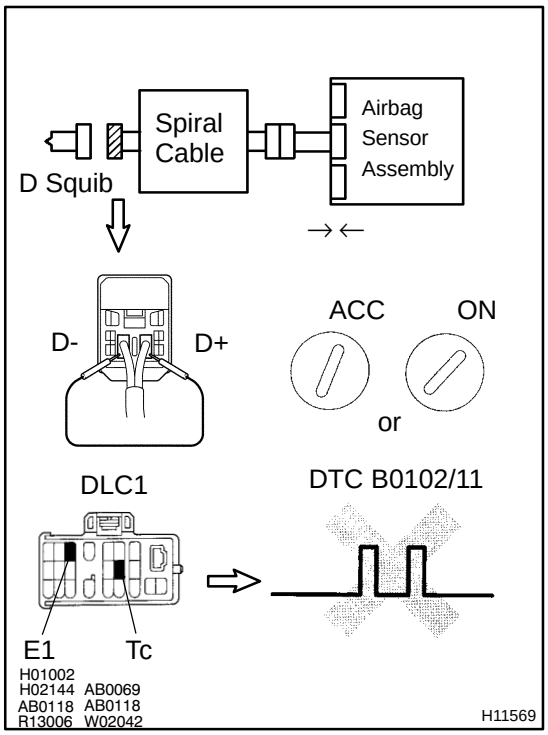

PREPARATION:

(a) Connect the connector to the airbag sensor assembly.

(b) Using a service wire, connect D+ and D- of the connector (on the spiral cable side) between the spiral cable and the steering wheel pad.

(c) Connect negative (-) terminal cable to the battery, and wait at least for 2 seconds.

CHECK:

(a) Turn the ignition switch to ACC or ON, and wait at least for 20 seconds.

(b) Clear the DTC stored in memory
(See step 5 on page DI-349).

(c) Turn the ignition switch to LOCK, and wait at least for 20 seconds.

(d) Turn the ignition switch to ACC or ON, and wait at least for 20 seconds.

(e) Check the DTC (See page DI-349).

OK:

DTC B0102/11 is not output.

HINT:

Codes other than code B0102/11 may be output at this time, but they are not relevant to this check.

NG	Replace airbag sensor assembly.

OK

4	Check D squib.

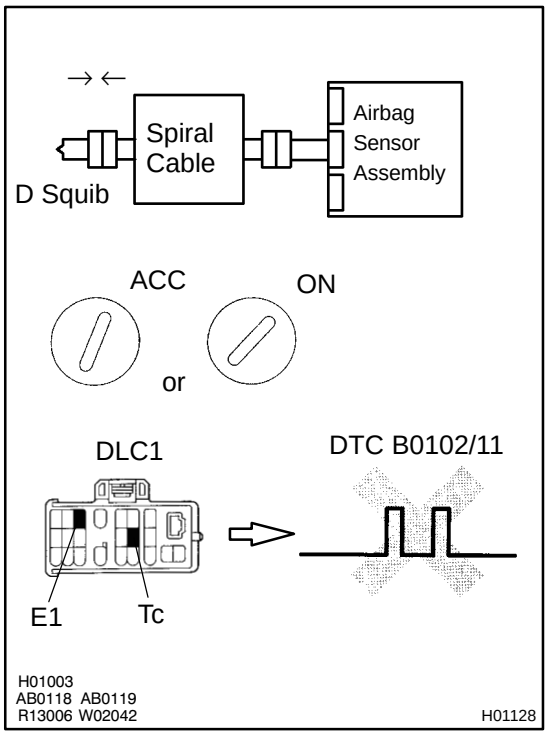

PREPARATION:

(a) Turn the ignition switch to LOCK.
(b) Disconnect negative (-) terminal cable from the battery, and wait at least for 90 seconds.
(c) Connect the steering wheel pad connector.
(d) Connect negative (-) terminal cable to the battery, and wait at least for 2 seconds.

CHECK:

(a) Turn the ignition switch to ACC or ON, and wait at least for 20 seconds.
(b) Clear the DTC stored in memory
(See step 5 on page DI-349).
(c) Turn the ignition switch to LOCK, and wait at least for 20 seconds.
(d) Turn the ignition switch to ACC or ON, and wait at least for 20 seconds.
(e) Check the DTC (See page DI-349).

OK:

DTC B0102/11 is not output.

HINT:
Codes other than code B0102/11 may be output at this time, but they are not relevant to this check.

NG	Replace steering wheel pad.

OK

From the results of the above inspection, the malfunctioning part can now be considered normal. To make sure of this, use the simulation method to check. If the malfunctioning part can not be detected by the simulation method, replace all SRS components including the wire harness.

5	Check spiral cable.

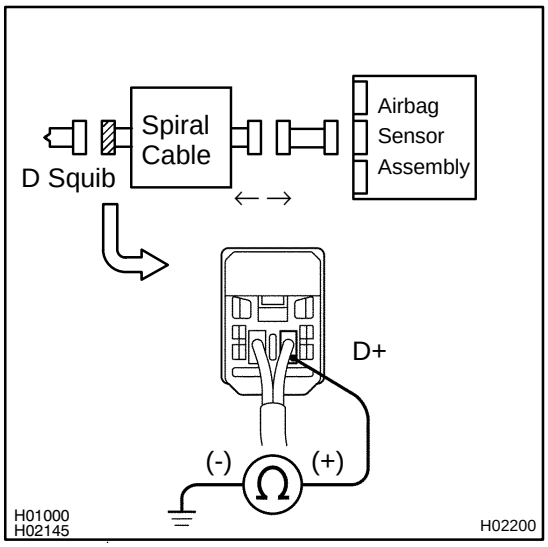

PREPARATION:
Disconnect the connector between the airbag sensor assembly and the spiral cable.

CHECK:
For the connector (on the spiral cable side) between the steering wheel pad and the spiral cable, measure the resistance between D+ and body ground.

OK:

Resistance: 1 MΩ or Higher

NG → **Repair or replace spiral cable.**

OK

6	Check harness between airbag sensor assembly and spiral cable.

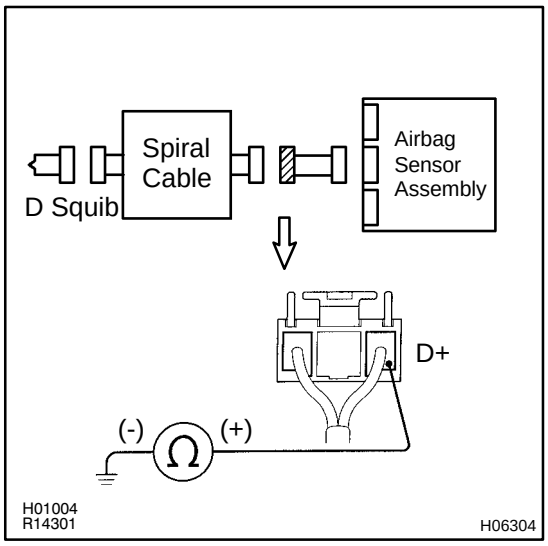

CHECK:
For the connector (on the spiral cable side) between the spiral cable and the airbag sensor assembly, measure the resistance between D+ and body ground.

OK:

Resistance: 1 MΩ or Higher

NG → **Repair or replace harness between airbag sensor assembly and spiral cable.**

OK

From the results of the above inspection, the malfunctioning part can now be considered normal. To make sure of this, use the simulation method to check. If the malfunctioning part can not be detected by the simulation method, replace all SRS components including the wire harness.

DI4DN-02

DTC	B0103/12	Short in D Squib Circuit (to B+)

CIRCUIT DESCRIPTION

The D squib circuit consists of the airbag sensor assembly, spiral cable and steering wheel pad.
It causes the SRS to deploy when the SRS deployment conditions are satisfied.
For details of the function of each component, see OPERATION on page RS-3 .
DTC B0103/12 is recorded when a B+ short is detected in the D squib circuit.

DTC No.	DTC Detecting Condition	Trouble Area
B0103/12	●Short circuit in D squib wire harness (to B+) ●D squib malfunction ●Spiral cable malfunction ●Airbag sensor assembly malfunction	●Steering wheel pad (D squib) ●Spiral cable ●Airbag sensor assembly ●Wire harness

WIRING DIAGRAM

See page DI-362 .

INSPECTION PROCEDURE

1	Prepare for inspection (See step 1 on page DI-475).

2	Check D squib circuit.

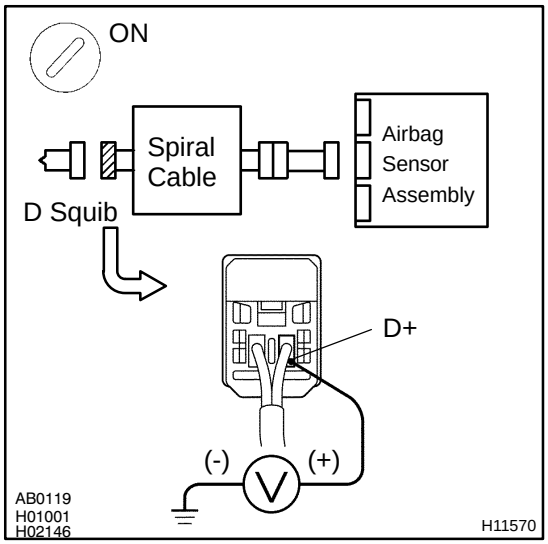

CHECK:

(a) Turn ignition switch to ON.

(b) For the connector (on the spiral cable side) between the spiral cable and the steering wheel pad, measure the voltage between D+ and body ground.

OK:

Voltage: 0 V

NG	Go to step 5.

OK

3	Check airbag sensor assembly.

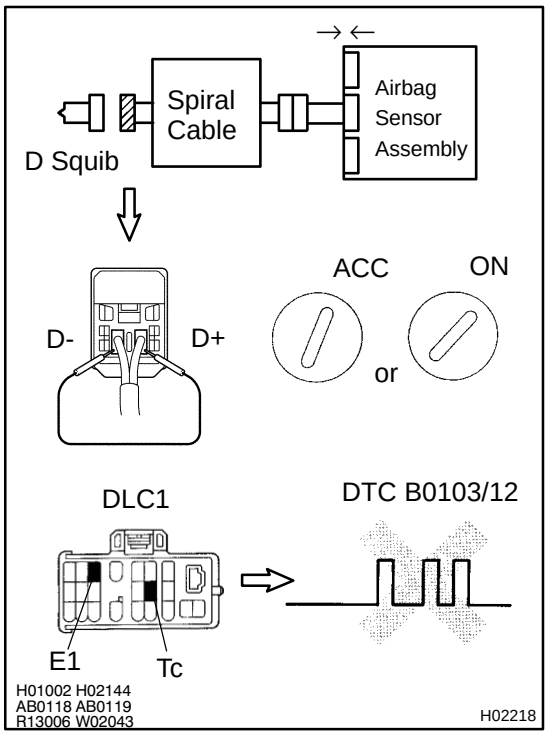

PREPARATION:

(a) Connect the connector to the airbag sensor assembly.
(b) Using a service wire, connect D+ and D- of the connector (on the spiral cable side) between the spiral cable and the steering wheel pad.
(c) Connect negative (-) terminal cable to the battery, and wait at least for 2 seconds.

CHECK:

(a) Turn the ignition switch to ACC or ON, and wait at least for 20 seconds.
(b) Clear the DTC stored in memory
(See step 5 on page DI-349).
(c) Turn the ignition switch to LOCK, and wait at least for 20 seconds.
(d) Turn the ignition switch to ACC or ON, and wait at least for 20 seconds.
(e) Check the DTC (See page DI-349).

OK:

DTC B0103/12 is not output.

HINT:
Codes other than code B0103/12 may be output at this time, but they are not relevant to this check.

NG	Replace airbag sensor assembly.

OK

4	Check D squib.

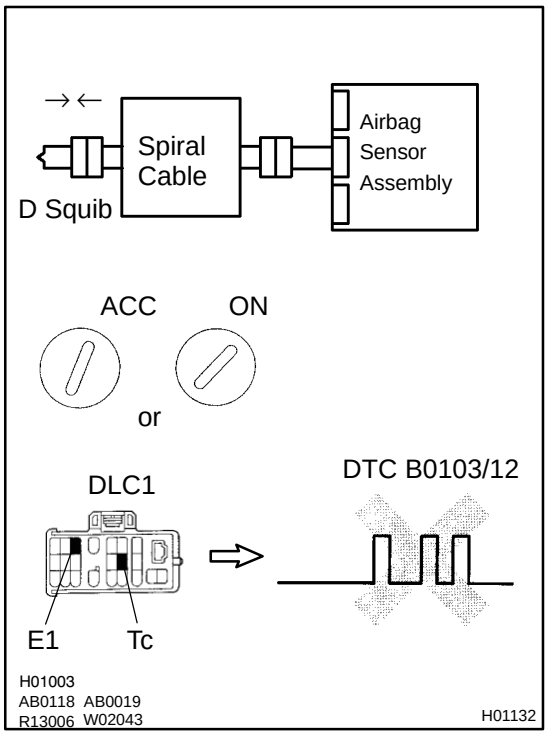

PREPARATION:

(a) Turn the ignition switch to LOCK.
(b) Disconnect negative (-) terminal cable from the battery, and wait at least for 90 seconds.
(c) Connect the steering wheel pad connector.
(d) Connect negative (-) terminal cable to the battery, and wait at least for 2 seconds.

CHECK:

(a) Turn the ignition switch to ACC or ON, and wait at least for 20 seconds.
(b) Clear the DTC stored in memory
(See step 5 on page DI-349).
(c) Turn the ignition switch to LOCK, and wait at least for 20 seconds.
(d) Turn the ignition switch to ACC or ON, and wait at least for 20 seconds.
(e) Check the DTC (See page DI-349).

OK:

DTC B0103/12 is not output.

HINT:
Codes other than code B0103/12 may be output at this time, but they are not relevant to this check.

NG	Replace steering wheel pad.

OK

From the results of the above inspection, the malfunctioning part can now be considered normal. To make sure of this, use the simulation method to check. If the malfunctioning part can not be detected by the simulation method, replace all SRS components including the wire harness.

5	Check spiral cable.

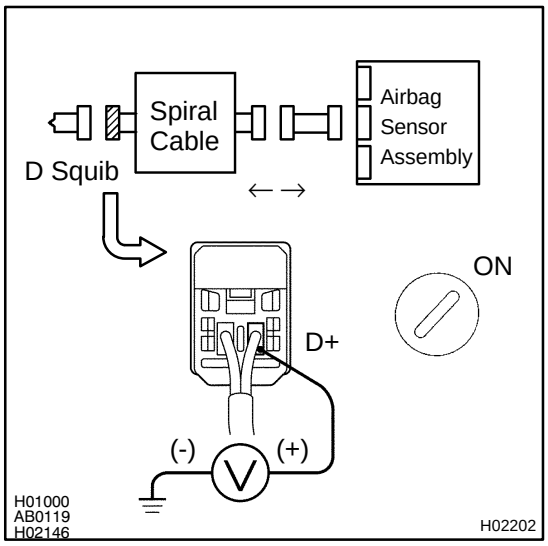

PREPARATION:

(a) Turn the ignition switch to LOCK.

(b) Disconnect the connector between the airbag sensor assembly and the spiral cable.

CHECK:

(a) Turn the ignition switch to ON.

(b) For the connector (on the spiral cable side) between the spiral cable and the steering wheel pad, measure the voltage between D+ and body ground.

OK:

Voltage: 0 V

NG	Repair or replace spiral cable.

OK

6	Check harness between airbag sensor assembly and spiral cable.

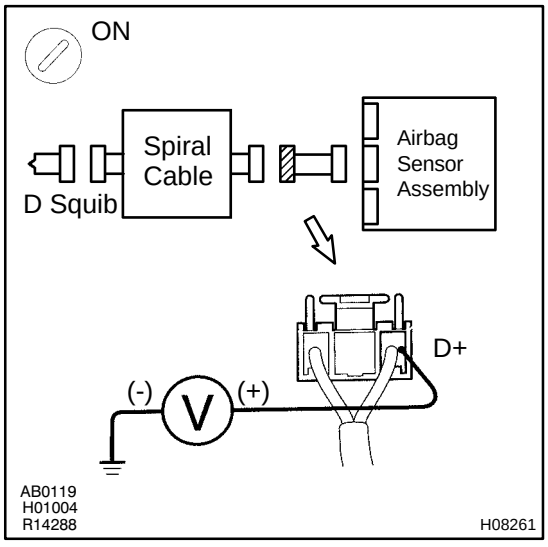

CHECK:

(a) Turn the ignition switch to ON.

(b) For the connector (on the spiral cable side) between the spiral cable and airbag sensor assembly, measure the voltage between D+ and body ground.

OK:

Voltage: 0 V

NG	Repair or replace harness between airbag sensor assembly and spiral cable.

OK

From the results of the above inspection, the malfunctioning part can now be considered normal. To make sure of this, use the simulation method to check. If the malfunctioning part can not be detected by the simulation method, replace all SRS components including the wire harness.

DI4CO-03

DTC	B0105/53	Short in P Squib Circuit

CIRCUIT DESCRIPTION

The P squib circuit consists of the airbag sensor assembly and front passenger airbag assembly.
It causes the SRS to deploy when the SRS deployment conditions are satisfied.
For details of the function of each component, see OPERATION on page RS-3 .
DTC B0105/53 is recorded when a short is detected in the P squib circuit.

DTC No.	DTC Detecting Condition	Trouble Area
B0105/53	●Short circuit in P squib wire harness ●P squib malfunction ●Airbag sensor assembly malfunction	●Front passenger airbag assembly (P squib) ●Airbag sensor assembly ●Wire harness

WIRING DIAGRAM

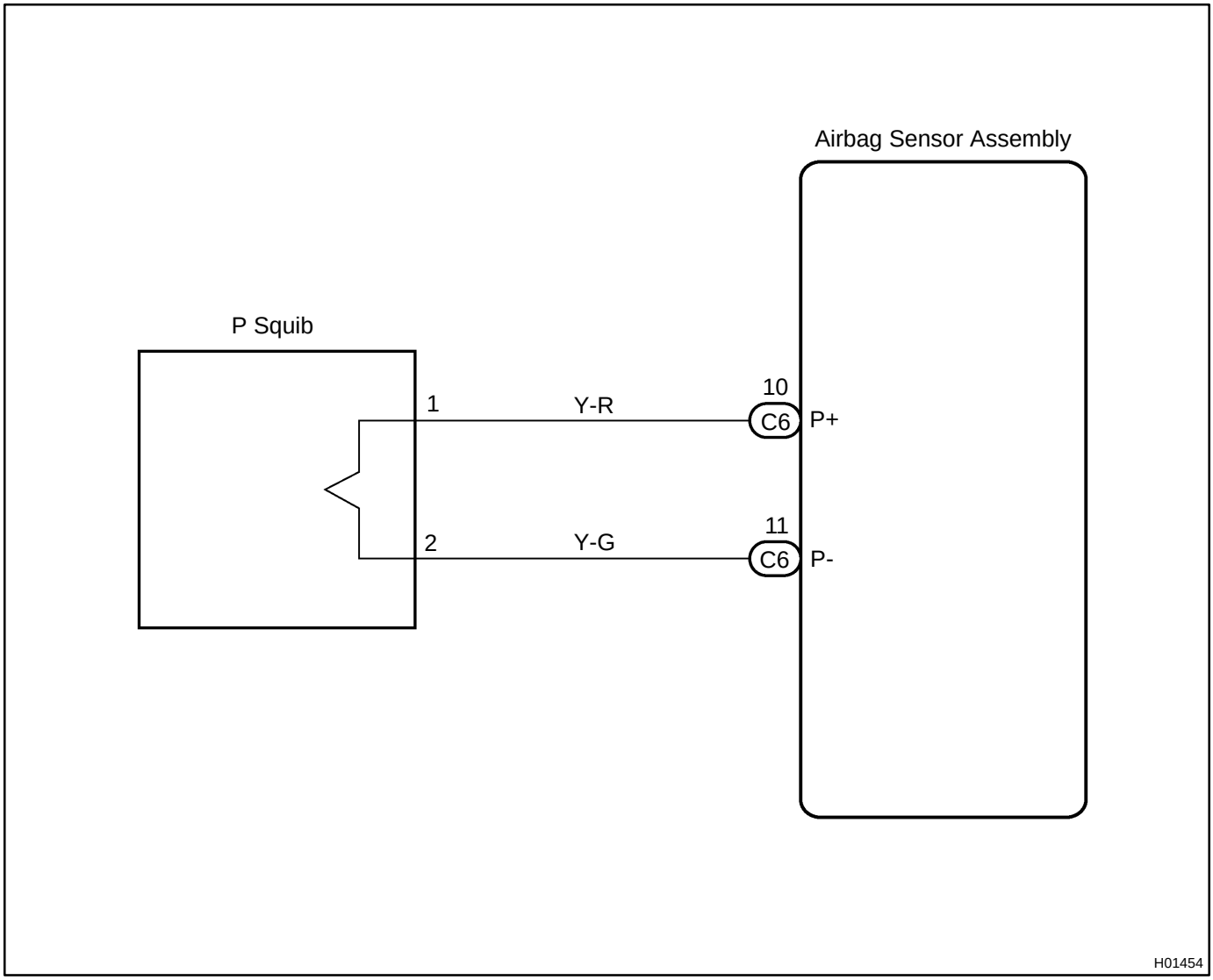

INSPECTION PROCEDURE

1	**Prepare for inspection (See step 1 on page DI-475).**

2	**Check P squib circuit.**

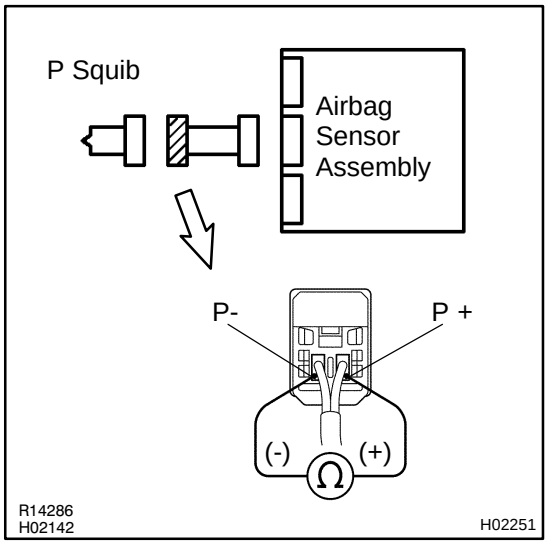

PREPARATION:

Release the airbag activation prevention mechanism of the connector (on the airbag sensor assembly side) between the front passenger airbag assembly and the airbag sensor assembly (See page DI-349).

CHECK:

For the connector (on the front passenger airbag assembly side) between the front passenger airbag assembly and the airbag sensor assembly, measure the resistance between P+ and P-.

OK:

Resistance: 1 MΩ or Higher

NG → **Repair or replace harness or connector between front passenger airbag assembly and airbag sensor assembly.**

OK

3	Check airbag sensor assembly.

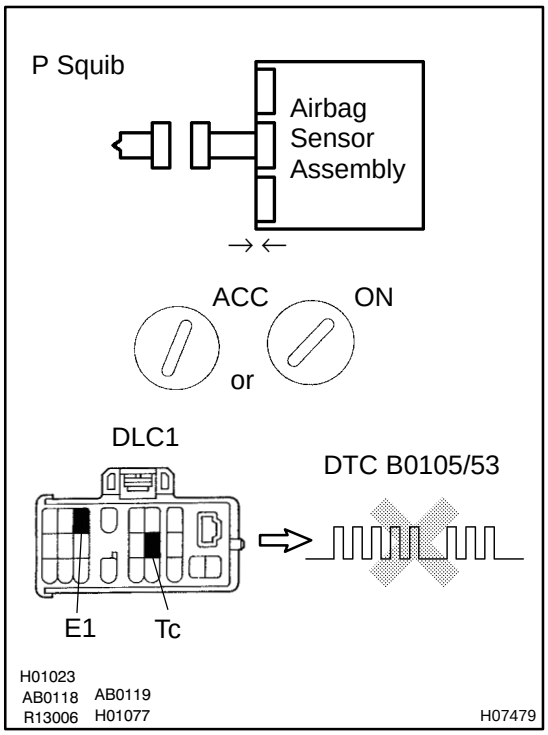

PREPARATION:

(a) Connect the connector to the airbag sensor assembly.
(b) Connect negative (-) terminal cable to the battery, and wait at least for 2 seconds.

CHECK:

(a) Turn the ignition switch to ACC or ON and wait at least for 20 seconds.
(b) Clear the DTC stored in memory (See page DI-349).
(c) Turn the ignition switch to LOCK, and wait at least for 20 seconds.
(d) Turn the ignition switch to ACC or ON, and wait at least for 20 seconds.
(e) Check the DTC (See page DI-349).

OK:

DTC B0105/53 is not output.

HINT:

Codes other than code B0105/53 may be output at this time, but they are not relevant to this check.

NG → **Replace airbag sensor assembly.**

OK

4	Check P squib.

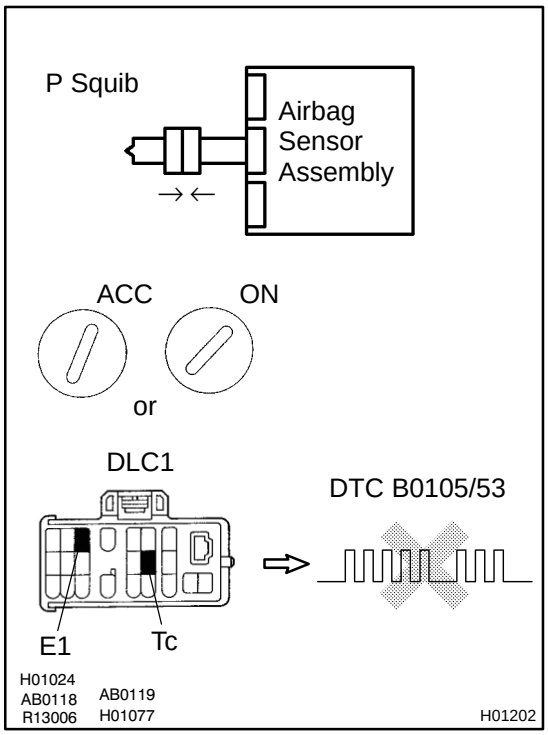

PREPARATION:

(a) Turn the ignition switch to LOCK.
(b) Disconnect negative (-) terminal cable from the battery, and wait at least for 90 seconds.
(c) Connect the front passenger airbag assembly connector.
(d) Connect negative (-) terminal cable to the battery, and wait at least for 2 seconds.

CHECK:

(a) Turn the ignition switch to LOOK, and wait at least for 20 seconds.
(b) Turn the ignition switch to ACC or ON, and wait at least for 20 seconds.
(c) Clear the DTC stored in memory (See page DI-349).
(d) Turn the ignition switch to LOCK, and wait at least for 20 seconds.
(e) Turn the ignition switch to ACC or ON, and wait at least for 20 seconds.
(f) Check the DTC (See page DI-349).

OK:

DTC B0105/53 is not output.

HINT:

Codes other than code B0105/53 may be output at this time, but they are not relevant to this check.

NG → **Replace front passenger airbag assembly.**

OK

From the results of the above inspection, the malfunctioning part can now be considered normal. To make sure of this, use the simulation method to check.

DI4CP-03

DTC	B0106/54	Open in P Squib Circuit

CIRCUIT DESCRIPTION

The P squib circuit consists of the airbag sensor assembly and front passenger airbag assembly.
It causes the SRS to deploy when the SRS deployment conditions are satisfied.
For details of the function of each component, see OPERATION on page RS-3 .
DTC B0106/54 is recorded when an open is detected in the P squib circuit.

DTC No.	DTC Detecting Condition	Trouble Area
B0106/54	●Open circuit in P+ wire harness or P- wire harness of squib ●P squib malfunction ●Airbag sensor assembly malfunction	●Front passenger airbag assembly (P squib) ●Airbag sensor assembly ●Wire harness

WIRING DIAGRAM

See page DI-379 .

INSPECTION PROCEDURE

1	**Prepare for inspection (See step 1 on page DI-475).**

2	**Check P squib circuit.**

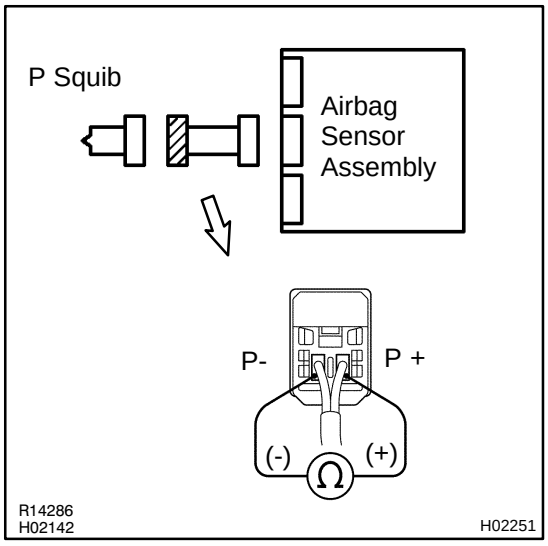

CHECK:

For the connector (on the front passenger airbag assembly side) between the front passenger airbag assembly and the airbag sensor assembly, measure the resistance between P+ and P-.

OK:

Resistance: Below 1 Ω

NG → **Repair or replace harness or connector between front passenger airbag assembly and airbag sensor assembly.**

OK

3	Check airbag sensor assembly.

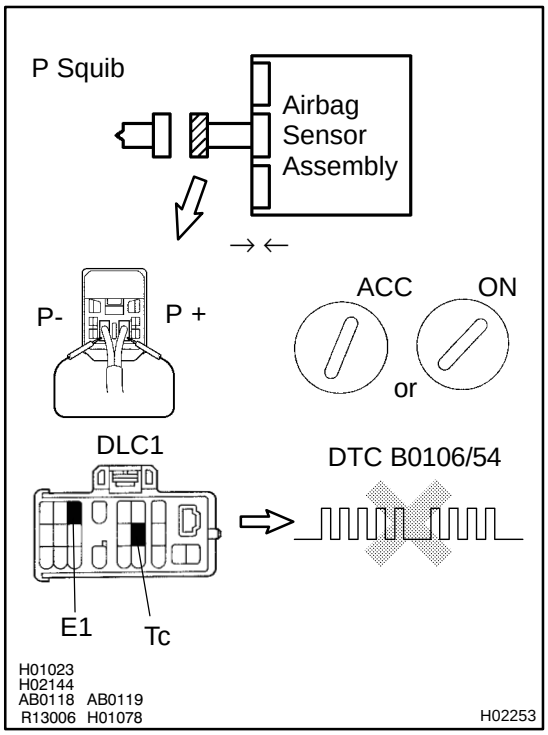

PREPARATION:

(a) Connect the connector to the airbag sensor assembly.

(b) Using a service wire, connect P+ and P- of the connector (on the front passenger airbag assembly side) between the front passenger airbag assembly and the airbag sensor assembly.

(c) Connect negative (-) terminal cable to the battery, and wait at least for 2 seconds.

CHECK:

(a) Turn the ignition switch to ACC or ON and wait at least for 20 seconds.

(b) Clear the DTC stored in memory (See page DI-349).

(c) Turn the ignition switch to LOCK, and wait at least for 20 seconds.

(d) Turn the ignition switch to ACC or ON, and wait at least for 20 seconds.

(e) Check the DTC (See page DI-349).

OK:

DTC B0106/54 is not output.

HINT:

Codes other than code B0106/54 may be output at this time, but they are not relevant to this check.

NG	Replace airbag sensor assembly.

OK

4	Check P squib.

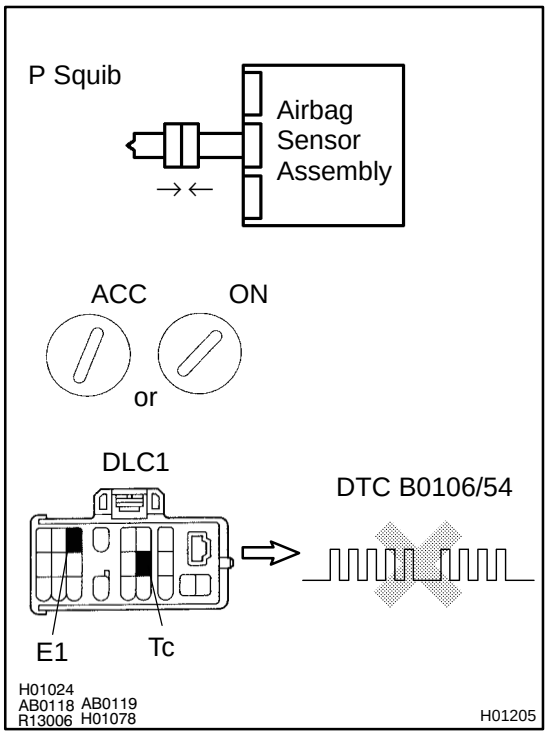

PREPARATION:

(a) Turn the ignition switch to LOCK.
(b) Disconnect negative (-) terminal cable from the battery, and wait at least for 90 seconds.
(c) Connect the front passenger airbag assembly connector.
(d) Connect negative (-) terminal cable to the battery, and wait at least for 2 seconds.

CHECK:

(a) Turn the ignition switch to ACC or ON, and wait at least for 20 seconds.
(b) Clear the DTC stored in memory (See page DI-349).
(c) Turn the ignition switch to LOCK, and wait at least for 20 seconds.
(d) Turn the ignition switch to ACC or ON, and wait at least for 20 seconds.
(e) Check the DTC (See page DI-349).

OK:

DTC B0106/54 is not output.

HINT:

Codes other than code B0106/54 may be output at this time, but they are not relevant to this check.

NG	Replace front passenger airbag assembly.

OK

From the results of the above inspection, the malfunctioning part can now be considered normal. To make sure of this, use the simulation method to check.

DI4CQ-02

DTC	B0107/51	Short in P Squib Circuit (to Ground)

CIRCUIT DESCRIPTION

The P squib circuit consists of the airbag sensor assembly and front passenger airbag assembly.
It causes the SRS to deploy when the SRS deployment conditions are satisfied.
For details of the function of each component, see OPERATION on page RS-3 .
DTC B0107/51 is recorded when ground short is detected in the P squib circuit.

DTC No.	DTC Detecting Condition	Trouble Area
B0107/51	●Short circuit in P squib wire harness (to ground) ●P squib malfunction ●Airbag sensor assembly malfunction	●Front passenger airbag assembly (P squib) ●Airbag sensor assembly ●Wire harness

WIRING DIAGRAM

See page DI-379 .

INSPECTION PROCEDURE

1	**Prepare for inspection (See step 1 on page DI-475).**

2	**Check P squib circuit.**

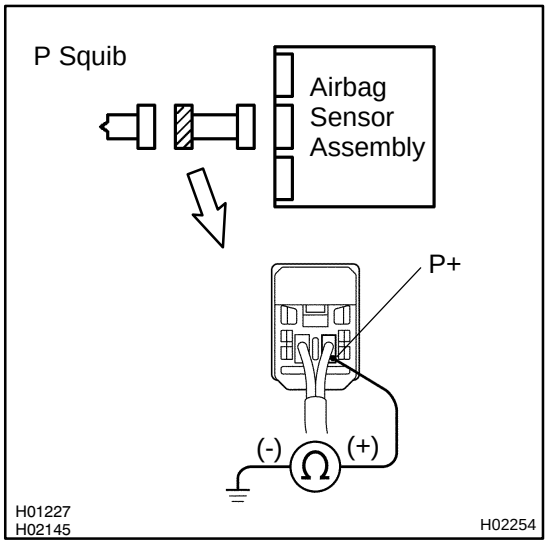

CHECK:

For the connector (on the front passenger airbag assembly side) between the front passenger airbag assembly and the airbag sensor assembly, measure the resistance between P+ and body ground.

OK:

Resistance: 1 MΩ or Higher

NG → **Repair or replace harness or connector between front passenger airbag assembly and airbag sensor assembly.**

OK

3	Check airbag sensor assembly.

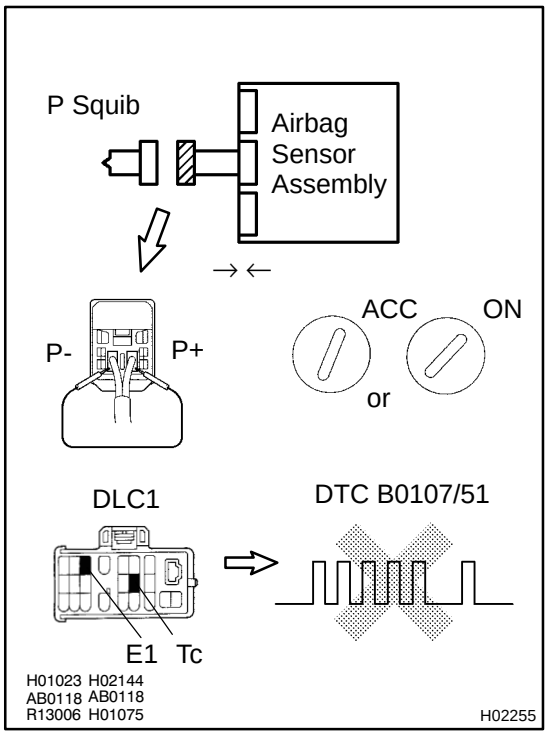

PREPARATION:

(a) Connect the connector to the airbag sensor assembly.

(b) Using a service wire, connect P+ and P- of the connector (on the front passenger airbag assembly side) between the front passenger airbag assembly and the airbag sensor assembly.

(c) Connect negative (-) terminal cable to the battery, and wait at least for 2 seconds.

CHECK:

(a) Turn the ignition switch to ACC or ON and wait at least for 20 seconds.

(b) Clear the DTC stored in memory
(See step 5 on page DI-349).

(c) Turn the ignition switch to LOCK, and wait at least for 20 seconds.

(d) Turn the ignition switch to ACC or ON, and wait at least for 20 seconds.

(e) Check the DTC (See page DI-349).

OK:

DTC B0107/51 is not output.

HINT:

Codes other than code B0107/51 may be output at this time, but they are not relevant to this check.

NG → **Replace airbag sensor assembly.**

OK

4	Check P squib.

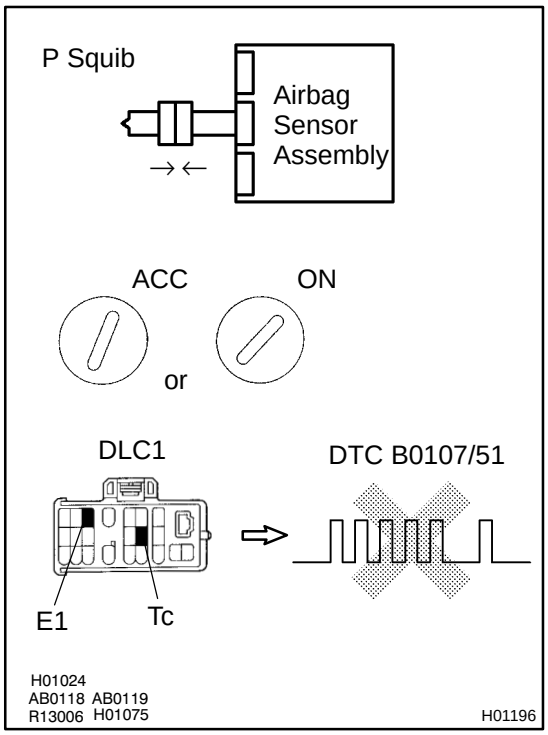

PREPARATION:

(a) Turn the ignition switch to LOCK.
(b) Disconnect negative (-) terminal cable from the battery, and wait at least for 90 seconds.
(c) Connect the front passenger airbag assembly connector.
(d) Connect negative (-) terminal cable to the battery, and wait at least for 2 seconds.

CHECK:

(a) Turn the ignition switch to ACC or ON, and wait at least for 20 seconds.
(b) Clear the DTC stored in memory
(See step 5 on page DI-349).
(c) Turn the ignition switch to LOCK, and wait at least for 20 seconds.
(d) Turn the ignition switch to ACC or ON, and wait at least for 20 seconds.
(e) Check the DTC (See page DI-349).

OK:

DTC B0107/51 is not output.

HINT:
Codes other than code B0107/51 may be output at this time, but they are not relevant to this check.

NG	Replace front passenger airbag assembly.

OK

From the results of the above inspection, the malfunctioning part can now be considered normal. To make sure of this, use the simulation method to check. If the malfunctioning part can not be detected by the simulation method, replace all SRS components including the wire harness.

DI4CR-02

DTC	B0108/52	Short in P Squib Circuit (to B+)

CIRCUIT DESCRIPTION

The P squib circuit consists of the airbag sensor assembly and front passenger airbag assembly.
It causes the SRS to deploy when the SRS deployment conditions are satisfied.
For details of the function of each component, see OPERATION on page RS-3 .
DTC B0108/52 is recorded when a B+ short is detected in the P squib circuit.

DTC No.	DTC Detecting Condition	Trouble Area
B0108/52	●Short circuit in P squib wire harness (to B+) ●P squib malfunction ●Airbag sensor assembly malfunction	●Front passenger airbag assembly (P squib) ●Airbag sensor assembly ●Wire harness

WIRING DIAGRAM

See page DI-379 .

INSPECTION PROCEDURE

1	**Prepare for inspection (See step 1 on page DI-475).**

2	**Check P squib circuit.**

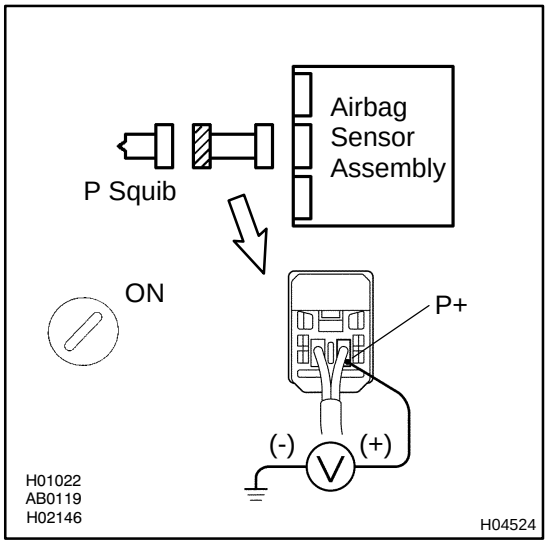

CHECK:

(a) Turn the ignition switch to ON.

(b) For the connector (on the front passenger airbag assembly side) between the front passenger airbag assembly and the airbag sensor assembly, measure the voltage between the P+ and body ground.

OK:

Voltage: 0 V

NG → **Repair or replace harness or connector between front passenger airbag assembly and airbag sensor assembly.**

OK

3	Check airbag sensor assembly.

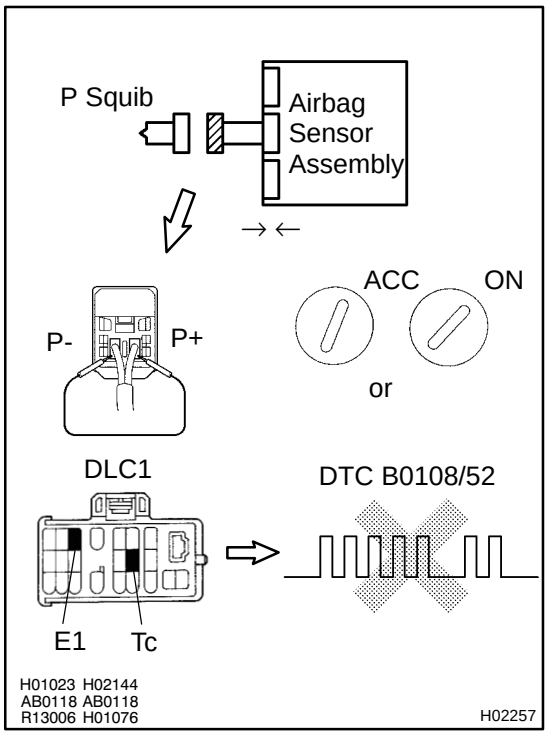

PREPARATION:

(a) Connect the connector to the airbag sensor assembly.

(b) Using a service wire, connect P+ and P- of the connector (on the front passenger airbag assembly side) between the front passenger airbag assembly and the airbag sensor assembly.

(c) Connect negative (-) terminal cable to the battery, and wait at least for 2 seconds.

CHECK:

(a) Turn the ignition switch to ACC or ON and wait at least for 20 seconds.

(b) Clear the DTC stored in memory
(See step 5 on page DI-349).

(c) Turn the ignition switch to LOCK, and wait at least for 20 seconds.

(d) Turn the ignition switch to ACC or ON, and wait at least for 20 seconds.

(e) Check the DTC (See page DI-349).

OK:

DTC B0108/52 is not output.

HINT:

Codes other than code B0108/52 may be output at this time, but they are not relevant to this check.

NG → **Replace airbag sensor assembly.**

OK

4	Check P squib.

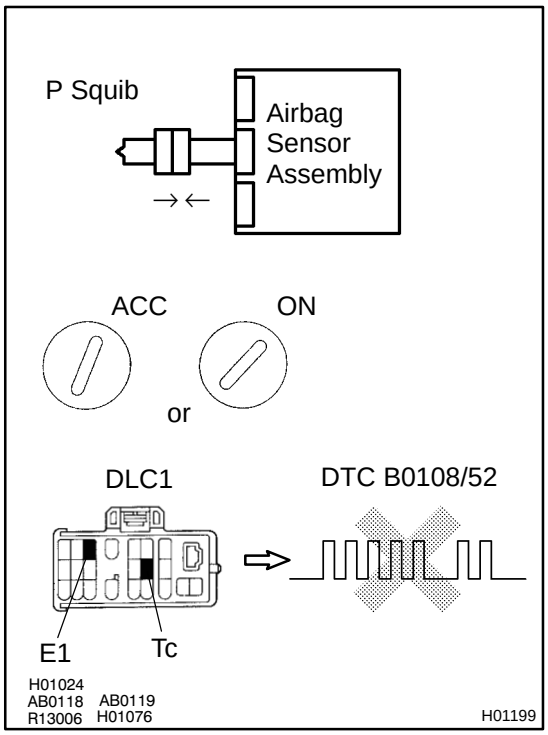

PREPARATION:

(a) Turn the ignition switch to LOCK.
(b) Disconnect negative (-) terminal cable from the battery, and wait at least for 90 seconds.
(c) Connect the front passenger airbag assembly connector.
(d) Connect negative (-) terminal cable to the battery, and wait at least for 2 seconds.

CHECK:

(a) Turn the ignition switch to ACC or ON, and wait at least for 20 seconds.
(b) Clear the DTC stored in memory
(See step 5 on page DI-349).
(c) Turn the ignition switch to LOCK, and wait at least for 20 seconds.
(d) Turn the ignition switch to ACC or ON, and wait at least for 20 seconds.
(e) Check the DTC (See page DI-349).

OK:

DTC B0108/52 is not output.

HINT:
Codes other than code B0108/52 may be output at this time, but they are not relevant to this check.

NG	Replace front passenger airbag assembly.

OK

From the results of the above inspection, the malfunctioning part can now be considered normal. To make sure of this, use the simulation method to check. If the malfunctioning part can not be detected by the simulation method, replace all SRS components including the wire harness.

DI6MS-01

DTC	B0110/43	Short in Side Squib (RH) Circuit

CIRCUIT DESCRIPTION

The side squib (RH) circuit consists of the airbag sensor assembly and side airbag assembly (RH).
It causes the SRS to deploy when the SRS deployment conditions are satisfied.
For details of the function of each component, see OPERATION on page RS-3 .
DTC B0110/43 is recorded when a short is detected in the side squib (RH) circuit.

DTC No.	DTC Detecting Condition	Trouble Area
B0110/43	●Short circuit between FR+ wire harness and FR- wire harness of squib ●Side squib (RH) malfunction ●Airbag sensor assembly malfunction	●Side airbag assembly (RH) ●Airbag sensor assembly ●Wire harness

WIRING DIAGRAM

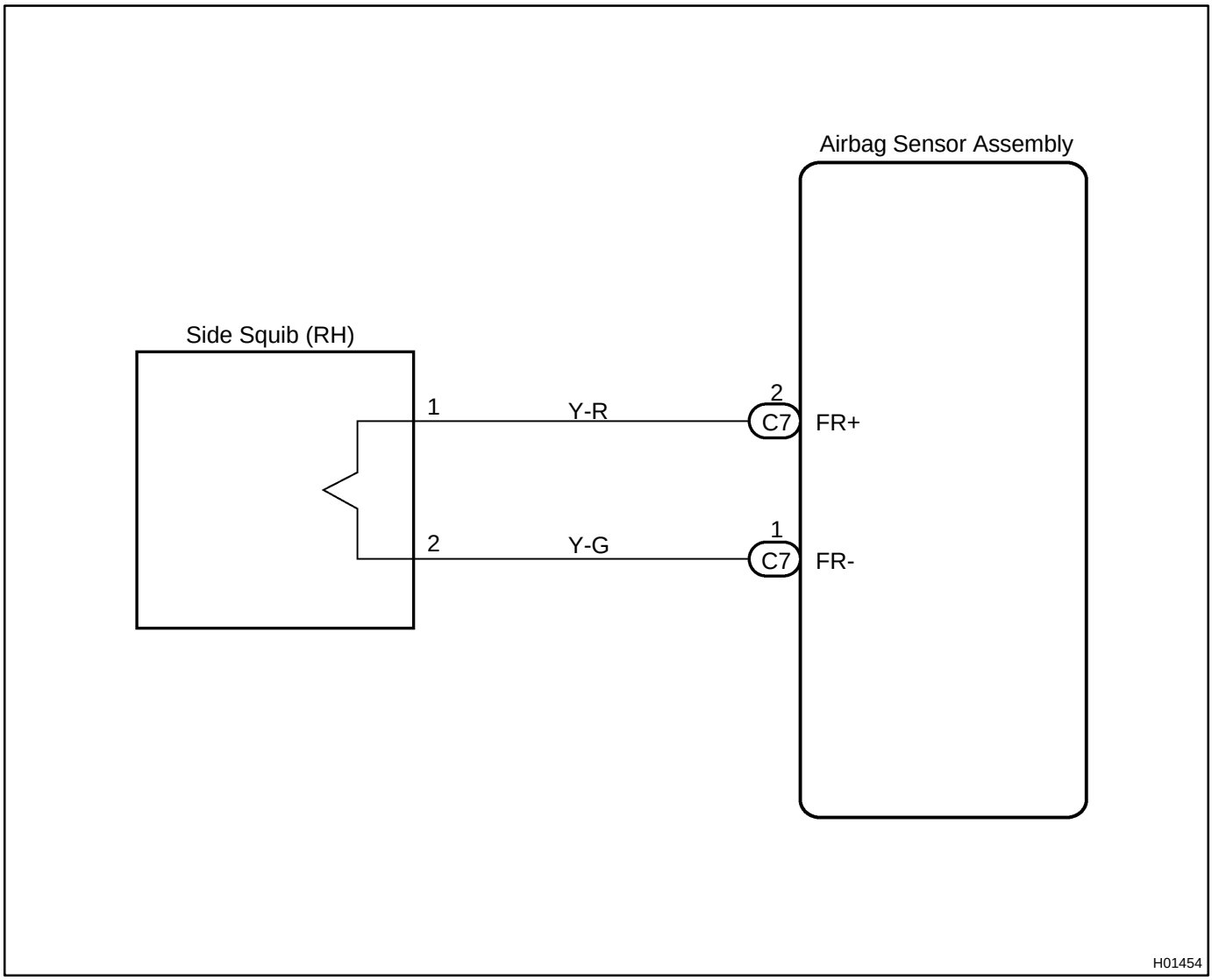

INSPECTION PROCEDURE

1	**Prepare for inspection (See step 1 on page DI-475).**

2	**Check side squib (RH) circuit.**

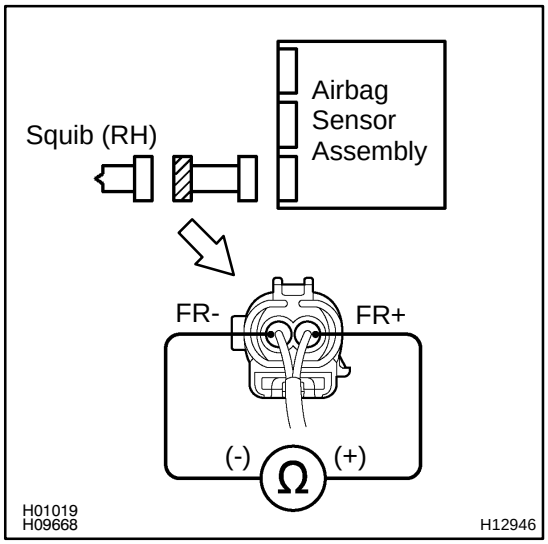

PREPARATION:

Release the airbag activation prevention mechanism of the connector (on the airbag sensor assembly side) between the airbag sensor assembly and the side airbag assembly (RH) (See page DI-349).

CHECK:

For the connector (on the side airbag assembly side) between the side airbag assembly (RH) and the airbag sensor assembly, measure the resistance between FR+ and FR-.

OK:

Resistance: 1 MΩ or Higher

NG → **Repair or replace harness or connector between side airbag assembly (RH) and airbag sensor assembly.**

OK

3	Check airbag sensor assembly.

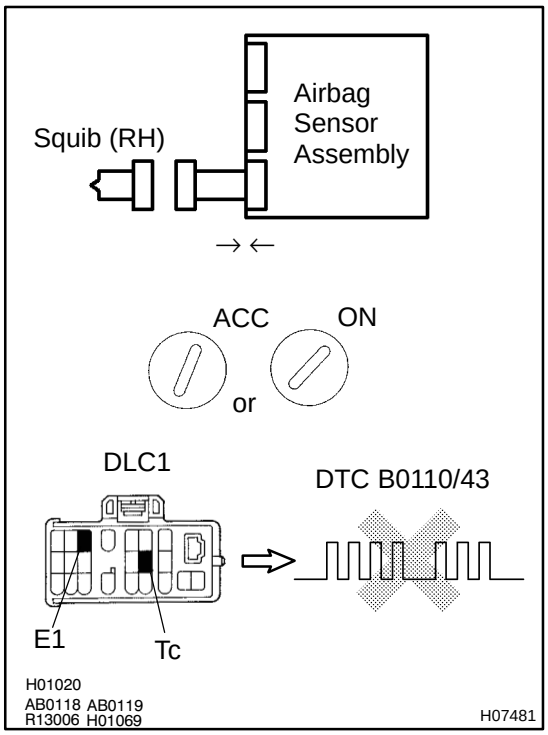

PREPARATION:

(a) Connect the connector to the airbag sensor assembly.
(b) Connect negative (-) terminal cable to the battery, and wait at least for 2 seconds.

CHECK:

(a) Turn the ignition switch to ACC or ON and wait at least for 20 seconds.
(b) Clear the DTC stored in memory (See page DI-349).
(c) Turn the ignition switch to LOCK, and wait at least for 20 seconds.
(d) Turn the ignition switch to ACC or ON, and wait at least for 20 seconds.
(e) Check the DTC (See page DI-349).

OK:

DTC B0110/43 is not output.

HINT:

Codes other than code B0110/43 may be output at this time, but they are not relevant to this check.

NG → **Replace airbag sensor assembly.**

OK

4	Check side squib (RH).

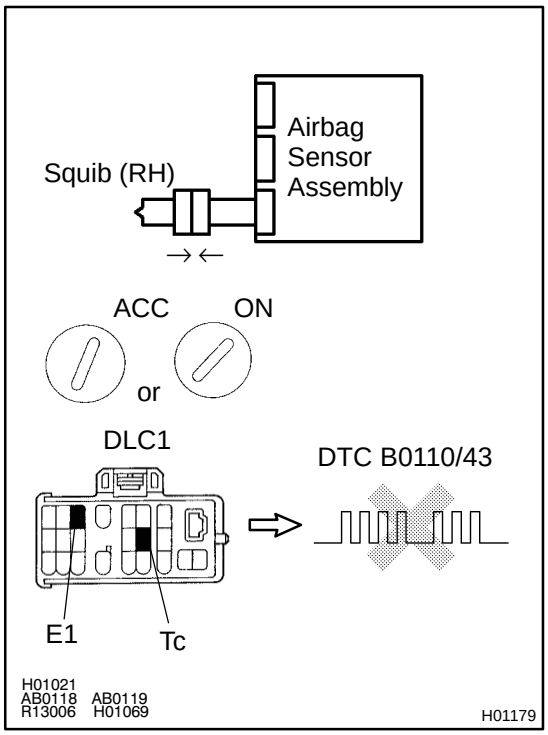

PREPARATION:

(a) Turn the ignition switch to LOCK.
(b) Disconnect negative (-) terminal cable from the battery, and wait at least for 90 seconds.
(c) Connect the side airbag assembly (RH) connector.
(d) Connect negative (-) terminal cable to the battery, and wait at least for 2 seconds.

CHECK:

(a) Turn the ignition switch to LOOK, and wait at least for 20 second.
(b) Turn the ignition switch to ACC or ON, and wait at least for 20 seconds.
(c) Clear the DTC stored in memory (See page DI-349).
(d) Turn the ignition switch to LOCK, and wait at least for 20 seconds.
(e) Turn the ignition switch to ACC or ON, and wait at least for 20 seconds.
(f) Check the DTC (See page DI-349).

OK:

DTC B0110/43 is not output.

HINT:

Codes other than code B0110/43 may be output at this time, but they are not relevant to this check.

NG → **Replace side airbag assembly (RH).**

OK

From the results of the above inspection, the malfunctioning part can now be considered normal. To make sure of this, use the simulation method to check.

DI6MT-01

DTC	B0111/44	Open in Side Squib (RH) Circuit

CIRCUIT DESCRIPTION

The side squib (RH) circuit consists of the airbag sensor assembly and side airbag assembly (RH).
It causes the SRS to deploy when the SRS deployment conditions are satisfied.
For details of the function of each component, see OPERATION on page RS-3 .
DTC B0111/44 is recorded when an open is detected in the side squib (RH) circuit.

DTC No.	DTC Detecting Condition	Trouble Area
B0111/44	●Open circuit in FR+ wire harness or FR- wire harness of squib ●Side squib (RH) malfunction ●Airbag sensor assembly malfunction	●Side airbag assembly (RH) ●Airbag sensor assembly ●Wire harness

WIRING DIAGRAM

See page DI-392 .

INSPECTION PROCEDURE

1	**Prepare for inspection (See step 1 on page DI-475).**

2	**Check front side squib (RH) circuit.**

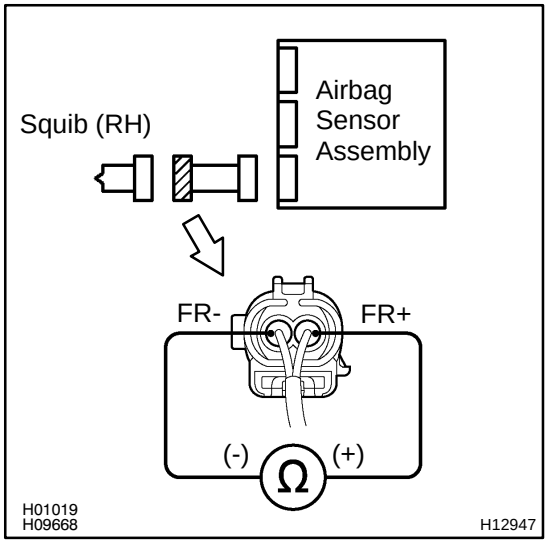

CHECK:

For the connector (on the front side airbag assembly side) between the front side airbag assembly (RH) and the airbag sensor assembly, measure the resistance between FR+ and FR-.

OK:

Resistance: Below 1 Ω

NG → **Repair or replace harness or connector between side airbag assembly (RH) and airbag sensor assembly.**

OK

3	Check airbag sensor assembly.

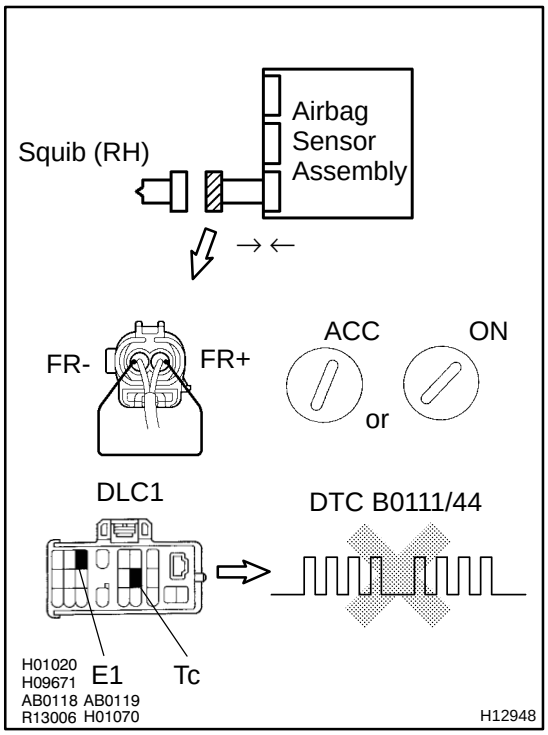

PREPARATION:

(a) Connect the connector to the airbag sensor assembly.

(b) Using a service wire, connect FR+ and FR- of the connector (on the side airbag assembly side) between the side airbag assembly (RH) and the airbag sensor assembly.

(c) Connect negative (-) terminal cable to the battery, and wait at least for 2 seconds.

CHECK:

(a) Turn the ignition switch to ACC or ON and wait at least for 20 seconds.

(b) Clear the DTC stored in memory (See page DI-349).

(c) Turn the ignition switch to LOCK, and wait at least for 20 seconds.

(d) Turn the ignition switch to ACC or ON, and wait at least for 20 seconds.

(e) Check the DTC (See page DI-349).

OK:

DTC B0111/44 is not output.

HINT:

Codes other than code B0111/44 may be output at this time, but they are not relevant to this check.

NG	Replace airbag sensor assembly.

OK

4	Check side squib (RH).

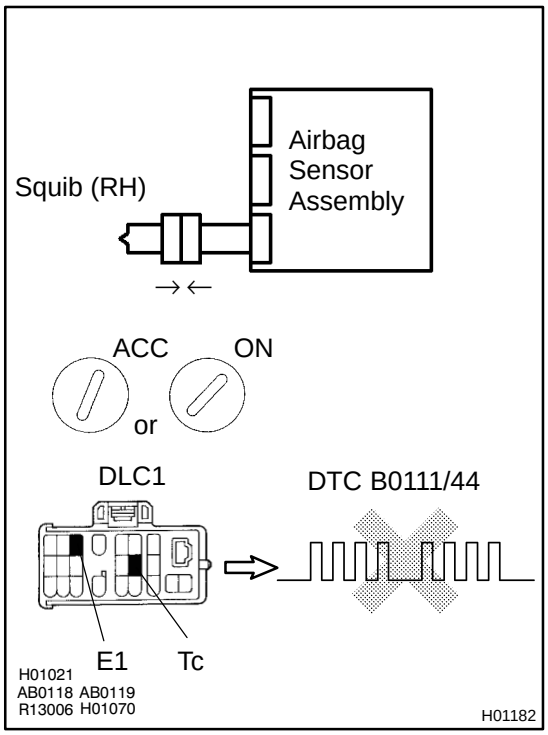

PREPARATION:

(a) Turn the ignition switch to LOCK.
(b) Disconnect negative (-) terminal cable from the battery, and wait at least for 90 seconds.
(c) Connect the front side airbag assembly (RH) connector.
(d) Connect negative (-) terminal cable to the battery, and wait at least for 2 seconds.

CHECK:

(a) Turn the ignition switch to ACC or ON, and wait at least for 20 seconds.
(b) Clear the DTC stored in memory (See page DI-349).
(c) Turn the ignition switch to LOCK, and wait at least for 20 seconds.
(d) Turn the ignition switch to ACC or ON, and wait at least for 20 seconds.
(e) Check the DTC (See page DI-349).

OK:

DTC B0111/44 is not output.

HINT:

Codes other than code B0111/44 may be output at this time, but they are not relevant to this check.

NG	Replace side airbag assembly (RH).

OK

From the results of the above inspection, the malfunctioning part can now be considered normal. To make sure of this, use the simulation method to check.

DTC	B0112/41	Short in Side Squib (RH) Circuit (to Ground)

CIRCUIT DESCRIPTION

The side squib (RH) circuit consists of the airbag sensor assembly and side airbag assembly (RH).
It causes the SRS to deploy when the SRS deployment conditions are satisfied.
For details of the function of each component, see OPERATION on page RS-3 .
DTC B0112/41 is recorded when ground short is detected in the side squib (RH) circuit.

DTC No.	DTC Detecting Condition	Trouble Area
B0112/41	●Short circuit in side squib (RH) wire harness (to ground) ●Side squib (RH) malfunction ●Airbag sensor assembly malfunction	●Side airbag assembly (RH) ●Airbag sensor assembly ●Wire harness

WIRING DIAGRAM

See page DI-392 .

INSPECTION PROCEDURE

1	**Prepare for inspection (See step 1 on page DI-475).**

2	**Check side squib (RH) circuit.**

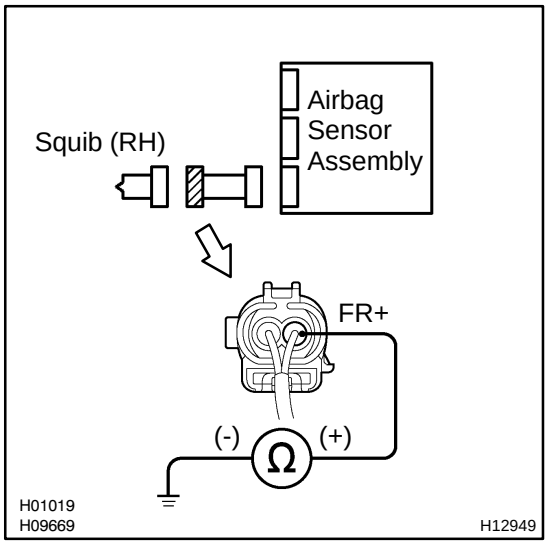

CHECK:

For the connector (on the side airbag assembly side) between the side airbag assembly (RH) and the airbag sensor assembly, measure the resistance between FR+ and body ground.

OK:

Resistance: 1 MΩ or Higher

NG → **Repair or replace harness or connector between side airbag assembly (RH) and airbag sensor assembly.**

OK

3	Check airbag sensor assembly.

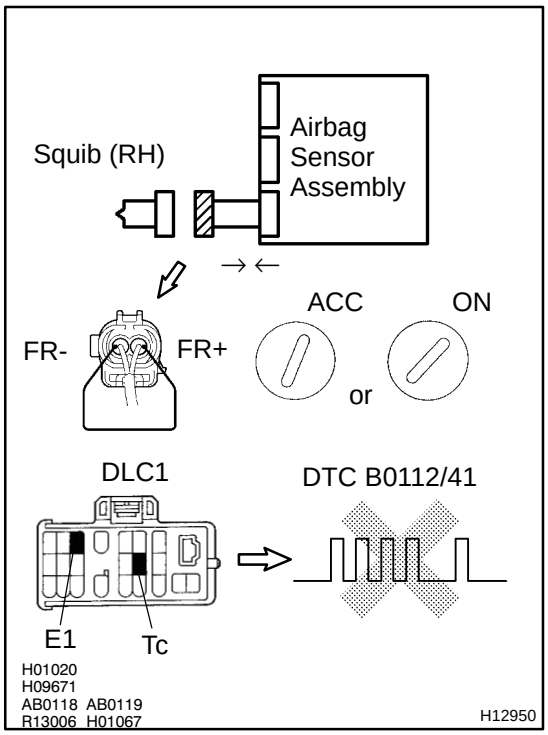

PREPARATION:

(a) Connect the connector to the airbag sensor assembly.

(b) Using a service wire, connect FR+ and FR- of the connector (on the side airbag assembly side) between the side airbag assembly (RH) and the airbag sensor assembly.

(c) Connect negative (-) terminal cable to the battery, and wait at least for 2 seconds.

CHECK:

(a) Turn the ignition switch to ACC or ON and wait at least for 20 seconds.

(b) Clear the DTC stored in memory
(See step 5 on page DI-349).

(c) Turn the ignition switch to LOCK, and wait at least for 20 seconds.

(d) Turn the ignition switch to ACC or ON, and wait at least for 20 seconds.

(e) Check the DTC (See page DI-349).

OK:

DTC B0112/41 is not output.

HINT:

Codes other than code B0112/41 may be output at this time, but they are not relevant to this check.

NG → **Replace airbag sensor assembly.**

OK

4	Check side squib (RH).

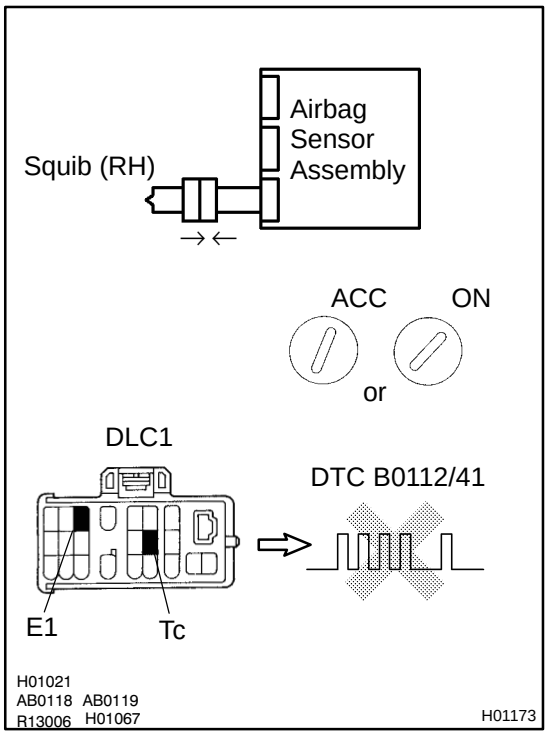

PREPARATION:

(a) Turn the ignition switch to LOCK.
(b) Disconnect negative (-) terminal cable from the battery, and wait at least for 90 seconds.
(c) Connect the side airbag assembly (RH) connector.
(d) Connect negative (-) terminal cable to the battery, and wait at least for 2 seconds.

CHECK:

(a) Turn the ignition switch to ACC or ON, and wait at least for 20 seconds.
(b) Clear the DTC stored in memory
(See step 5 on page DI-349).
(c) Turn the ignition switch to LOCK, and wait at least for 20 seconds.
(d) Turn the ignition switch to ACC or ON, and wait at least for 20 seconds.
(e) Check the DTC (See page DI-349).

OK:

DTC B0112/41 is not output.

HINT:
Codes other than code B0112/41 may be output at this time, but they are not relevant to this check.

NG	Replace side airbag assembly (RH).

OK

From the results of the above inspection, the malfunctioning part can now be considered normal. To make sure of this, use the simulation method to check. If the malfunctioning part can not be detected by the simulation method, replace all SRS components including the wire harness.

DI6MV-01

DTC	B0113/42	Short in Side Squib (RH) Circuit (to B+)

CIRCUIT DESCRIPTION

The side squib (RH) circuit consists of the airbag sensor assembly and side airbag assembly (RH).
It causes the SRS to deploy when the SRS deployment conditions are satisfied.
For details of the function of each component, see OPERATION on page RS-3 .
DTC B0113/42 is recorded when a B+ short is detected in the side squib (RH) circuit.

DTC No.	DTC Detecting Condition	Trouble Area
B0113/42	●Short circuit in side squib (RH) wire harness (to B+) ●Side squib (RH) malfunction ●Airbag sensor assembly malfunction	●Side airbag assembly (RH) ●Airbag sensor assembly ●Wire harness

WIRING DIAGRAM

See page DI-392 .

INSPECTION PROCEDURE

1	**Prepare for inspection (See step 1 on page DI-349).**

2	**Check side squib (RH) circuit.**

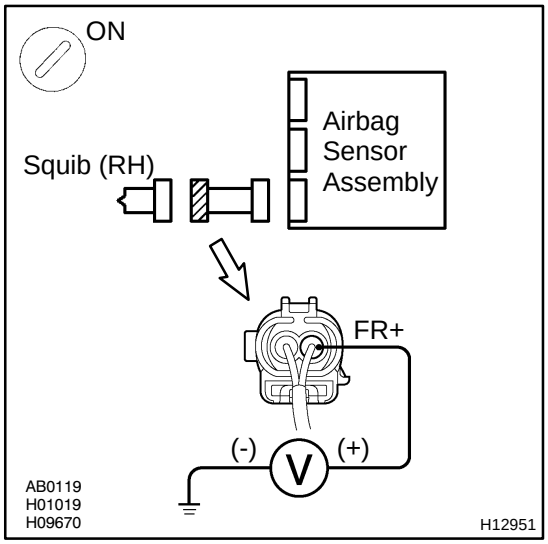

CHECK:

(a) Turn the ignition switch to ON.

(b) For the connector (on the airbag sensor assembly side) between the side airbag assembly (RH) and the airbag sensor assembly, measure the voltage between FR+ and body ground.

OK:

Voltage: 0 V

NG → **Repair or replace harness or connector between side airbag assembly (RH) and airbag sensor assembly.**

OK

3	Check airbag sensor assembly.

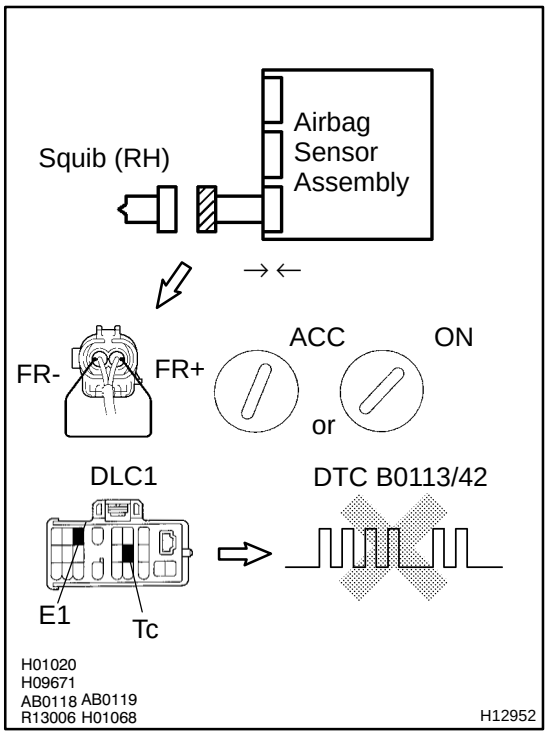

PREPARATION:

(a) Connect the connector to the airbag sensor assembly.

(b) Using a service wire, connect FR+ and FR- of the connector (on the front side airbag assembly side) between the front side airbag assembly (RH) and the airbag sensor assembly.

(c) Connect negative (-) terminal cable to the battery, and wait at least for 2 seconds.

CHECK:

(a) Turn the ignition switch to ACC or ON and wait at least for 20 seconds.

(b) Clear the DTC stored in memory
(See step 5 on page DI-349).

(c) Turn the ignition switch to LOCK, and wait at least for 20 seconds.

(d) Turn the ignition switch to ACC or ON, and wait at least for 20 seconds.

(e) Check the DTC (See page DI-349).

OK:

DTC B0113/42 is not output.

HINT:

Codes other than code B0113/42 may be output at this time, but they are not relevant to this check.

NG → **Replace airbag sensor assembly.**

OK

4	Check side squib (RH).

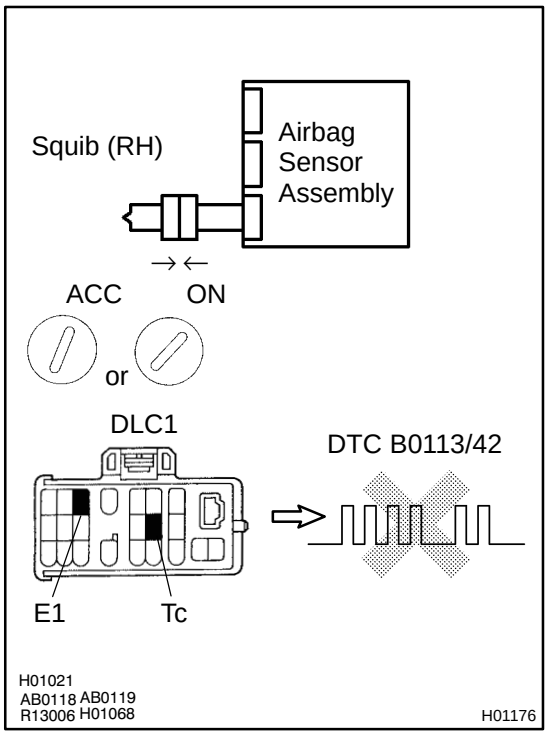

PREPARATION:

(a) Turn the ignition switch to LOCK.
(b) Disconnect negative (-) terminal cable from the battery, and wait at least for 90 seconds.
(c) Connect the front side airbag assembly (RH) connector.
(d) Connect negative (-) terminal cable to the battery, and wait at least for 2 seconds.

CHECK:

(a) Turn the ignition switch to ACC or ON, and wait at least for 20 seconds.
(b) Clear the DTC stored in memory
(See step 5 on page DI-349).
(c) Turn the ignition switch to LOCK, and wait at least for 20 seconds.
(d) Turn the ignition switch to ACC or ON, and wait at least for 20 seconds.
(e) Check the DTC (See page DI-349).

OK:

DTC B0113/42 is not output.

HINT:
Codes other than code B0113/42 may be output at this time, but they are not relevant to this check.

NG	Replace side airbag assembly (RH).

OK

From the results of the above inspection, the malfunctioning part can now be considered normal. To make sure of this, use the simulation method to check. If the malfunctioning part can not be detected by the simulation method, replace all SRS components including the wire harness.

DI6MW-01

DTC	B0115/47	Short in Side Squib (LH) Circuit

CIRCUIT DESCRIPTION

The side squib (LH) circuit consists of the airbag sensor assembly and side airbag assembly (LH).
It causes the SRS to deploy when the SRS deployment conditions are satisfied.
For details of the function of each component, see OPERATION on page RS-3 .
DTC B0115/47 is recorded when a short is detected in the side squib (LH) circuit.

DTC No.	DTC Detecting Condition	Trouble Area
B0115/47	●Short circuit between FL+ wire harness and FL- wire harness of squib ●Side squib (LH) malfunction ●Airbag sensor assembly malfunction	●Side airbag assembly (LH) ●Airbag sensor assembly ●Wire harness

WIRING DIAGRAM

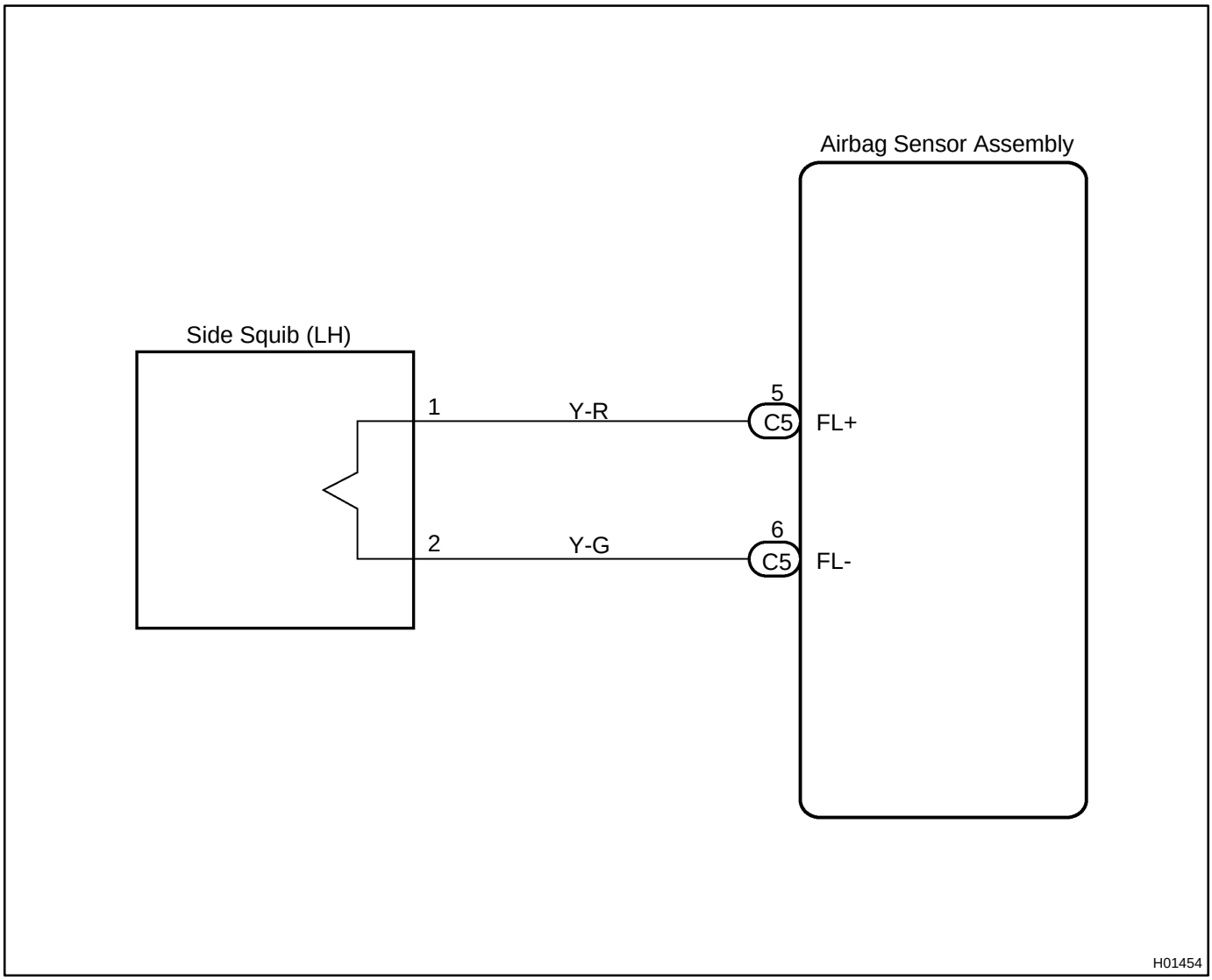

INSPECTION PROCEDURE

1	**Prepare for inspection (See step 1 on page DI-475).**

2	**Check side squib (LH) circuit.**

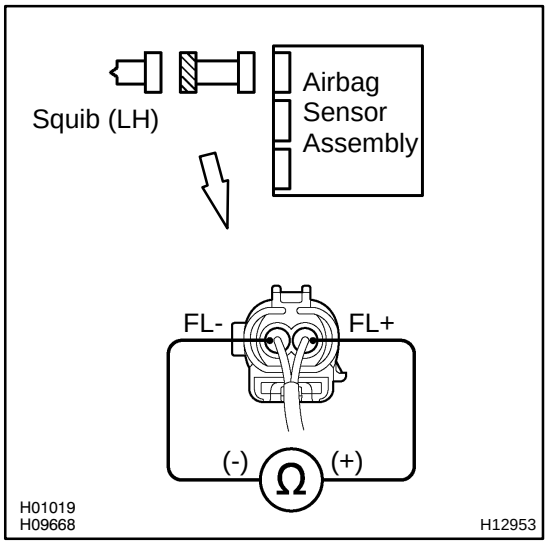

PREPARATION:

Release the airbag activation prevention mechanism of the connector (on the airbag sensor assembly side) between the airbag sensor assembly and the side airbag assembly (LH) (See page DI-349).

CHECK:

For the connector (on the side airbag assembly side) between the side airbag assembly (LH) and the airbag sensor assembly, measure the resistance between FL+ and FL-.

OK:

Resistance: 1 MΩ or Higher

NG → **Repair or replace harness or connector between side airbag assembly (LH) and airbag sensor assembly.**

OK

3	Check airbag sensor assembly.

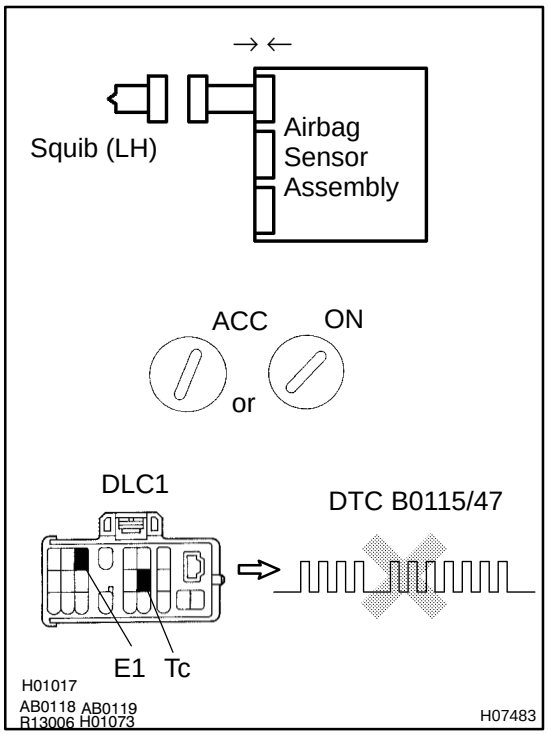

PREPARATION:

(a) Connect the connector to the airbag sensor assembly.
(b) Connect negative (-) terminal cable to the battery, and wait at least for 2 seconds.

CHECK:

(a) Turn the ignition switch to ACC or ON and wait at least for 20 seconds.
(b) Clear the DTC stored in memory (See page DI-349).
(c) Turn the ignition switch to LOCK, and wait at least for 20 seconds.
(d) Turn the ignition switch to ACC or ON, and wait at least for 20 seconds.
(e) Check the DTC (See page DI-349).

OK:

DTC B0115/47 is not output.

HINT:

Codes other than code B0115/47 may be output at this time, but they are not relevant to this check.

NG → **Replace airbag sensor assembly.**

OK

4	Check side squib (LH).

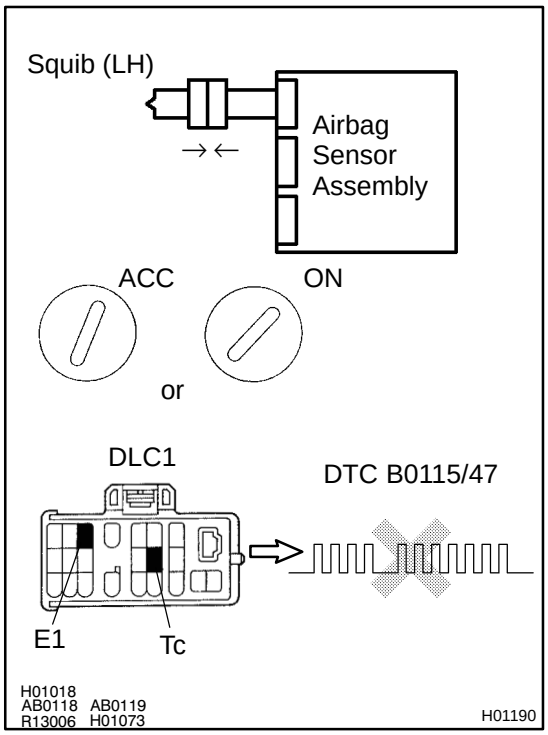

PREPARATION:

(a) Turn the ignition switch to LOCK.
(b) Disconnect negative (-) terminal cable from the battery, and wait at least for 90 seconds.
(c) Connect the front side airbag assembly (LH) connector.
(d) Connect negative (-) terminal cable to the battery, and wait at least for 2 seconds.

CHECK:

(a) Turn the ignition switch to LOOK, and wait at least for 20 second.
(b) Turn the ignition switch to ACC or ON, and wait at least for 20 seconds.
(c) Clear the DTC stored in memory (See page DI-349).
(d) Turn the ignition switch to LOCK, and wait at least for 20 seconds.
(e) Turn the ignition switch to ACC or ON, and wait at least for 20 seconds.
(f) Check the DTC (See page DI-349).

OK:

DTC B0115/47 is not output.

HINT:

Codes other than code B0115/47 may be output at this time, but they are not relevant to this check.

NG	Replace side airbag assembly (LH).

OK

From the results of the above inspection, the malfunctioning part can now be considered normal. To make sure of this, use the simulation method to check.

DI6MX-01

DTC	B0116/48	Open in Side Squib (LH) Circuit

CIRCUIT DESCRIPTION

The side squib (LH) circuit consists of the airbag sensor assembly and side airbag assembly (LH).
It causes the SRS to deploy when the SRS deployment conditions are satisfied.
For details of the function of each component, see OPERATION on page RS-3 .
DTC B0116/48 is recorded when an open is detected in the side squib (LH) circuit.

DTC No.	DTC Detecting Condition	Trouble Area
B0116/48	●Open circuit in FL+ wire harness or FL- wire harness of squib ●Side squib (LH) malfunction ●Airbag sensor assembly malfunction	●Side airbag assembly (LH) ●Airbag sensor assembly ●Wire harness

WIRING DIAGRAM

See page DI-405 .

INSPECTION PROCEDURE

1	**Prepare for inspection. (See step 1 on page DI-475)**

2	**Check side squib (LH) circuit.**

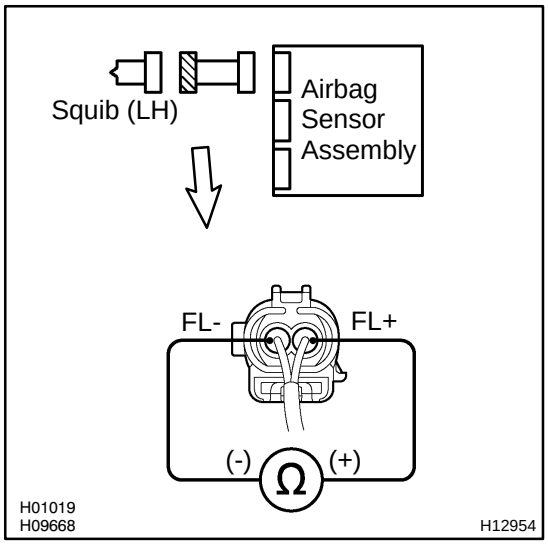

CHECK:

For the connector (on the front side airbag assembly side) between the front side airbag assembly (LH) and the airbag sensor assembly, measure the resistance between FL+ and FL-.

OK:

Resistance: Below 1 Ω

NG → **Repair or replace harness or connector between side airbag assembly (LH) and airbag sensor assembly.**

OK

3	Check airbag sensor assembly.

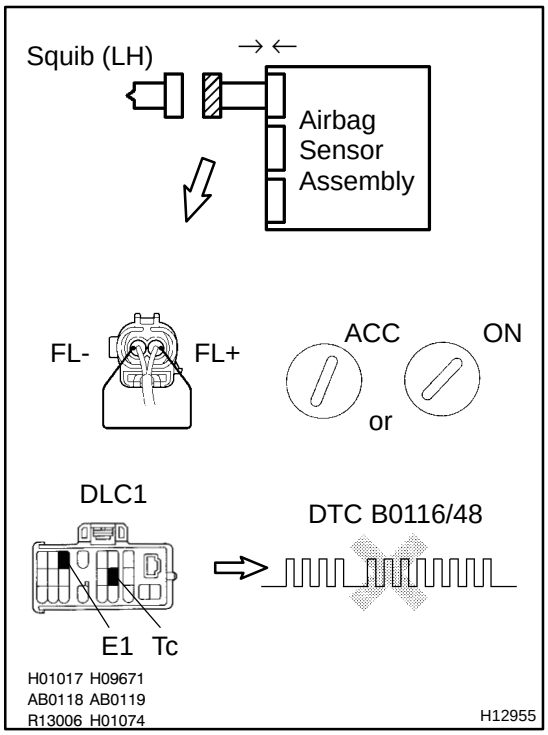

PREPARATION:

(a) Connect the connector to the airbag sensor assembly.
(b) Using a service wire, connect FL+ and FL- of the connector (on the side airbag assembly side) between the side airbag assembly (LH) and the airbag sensor assembly.
(c) Connect negative (-) terminal cable to the battery, and wait at least 2 seconds.

CHECK:

(a) Turn the ignition switch to ACC or ON and wait at least for 20 seconds.
(b) Clear the DTC stored in memory (See page DI-349).
(c) Turn the ignition switch to LOCK, and wait at least for 20 seconds.
(d) Turn the ignition switch to ACC or ON, and wait at least for 20 seconds.
(e) Check the DTC (See page DI-349).

OK:

DTC B0116/48 is not output.

HINT:

Codes other than code B0116/48 may be output at this time, but they are not relevant to this check.

NG → **Replace side airbag sensor assembly.**

OK

4	Check side squib (LH).

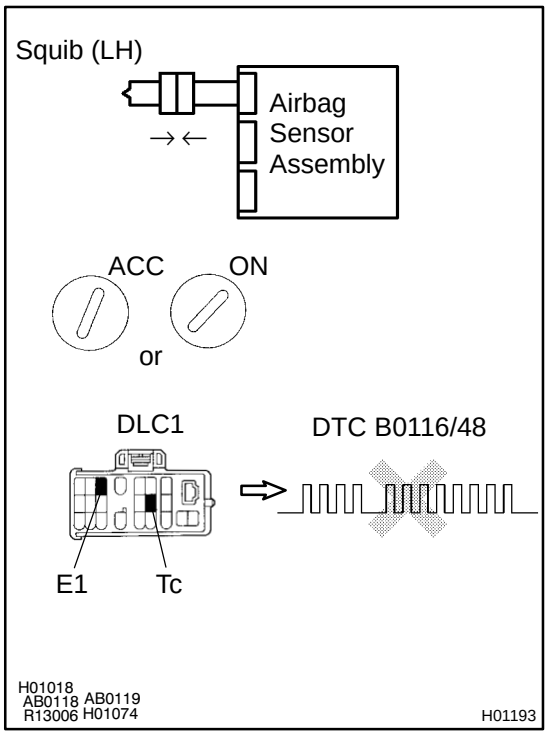

PREPARATION:

(a) Turn the ignition switch to LOCK.
(b) Disconnect negative (-) terminal cable from the battery, and wait at least for 90 seconds.
(c) Connect the side airbag assembly (LH) connector.
(d) Connect negative (-) terminal cable to the battery, and wait at least for 2 seconds.

CHECK:

(a) Turn the ignition switch to ACC or ON, and wait at least for 20 seconds.
(b) Clear the DTC stored in memory (See page DI-349).
(c) Turn the ignition switch to LOCK, and wait at least for 20 seconds.
(d) Turn the ignition switch to ACC or ON, and wait at least for 20 seconds.
(e) Check the DTC (See page DI-349).

OK:

DTC B0116/48 is not output.

HINT:

Codes other than code B0116/48 may be output at this time, but they are not relevant to this check.

NG	Replace side airbag assembly (LH).

OK

From the results of the above inspection, the malfunctioning part can now be considered normal. To make sure of this, use the simulation method to check.

DTC	B0117/45	Short in Side Squib (LH) Circuit (to Ground)

CIRCUIT DESCRIPTION

The side squib (LH) circuit consists of the airbag sensor assembly and side airbag assembly (LH).
It causes the SRS to deploy when the SRS deployment conditions are satisfied.
For details of the function of each component, see OPERATION on page RS-3 .
DTC B0117/45 is recorded when ground short is detected in the side squib (LH) circuit.

DTC No.	DTC Detecting Condition	Trouble Area
B0117/45	●Short circuit in side squib (LH) wire harness (to ground) ●Side squib (LH) malfunction ●Airbag sensor assembly malfunction	●Side airbag assembly (LH) ●Airbag sensor assembly ●Wire harness

WIRING DIAGRAM

See page DI-405 .

INSPECTION PROCEDURE

1	**Prepare for inspection (See step 1 on page DI-475).**

2	**Check side squib (LH) circuit.**

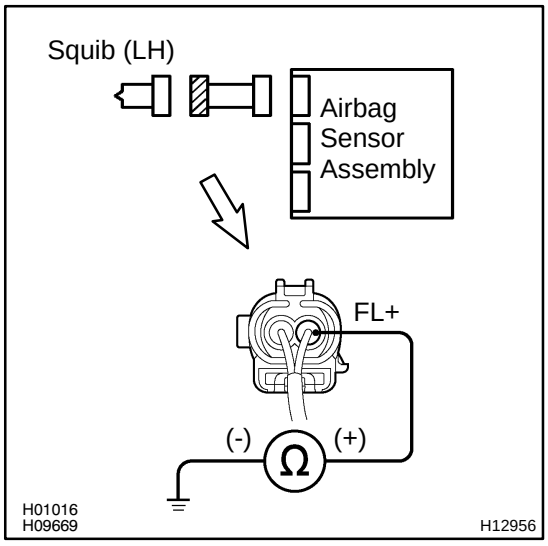

CHECK:

For the connector (on the side airbag assembly side) between the side airbag assembly (LH) and the airbag sensor assembly, measure the resistance between FL+ and body ground.

OK:

Resistance: 1 MΩ or Higher

NG → **Repair or replace harness or connector between side airbag assembly (LH) and airbag sensor assembly.**

OK

3	Check airbag sensor assembly.

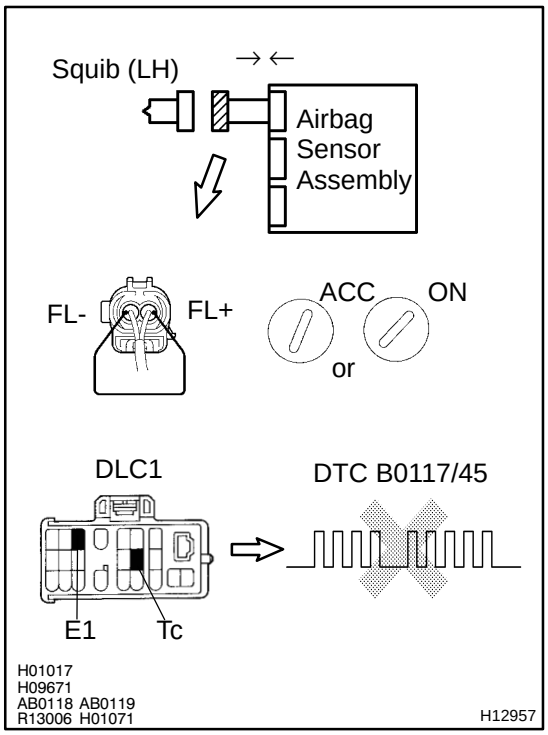

PREPARATION:

(a) Connect the connector to the airbag sensor assembly.
(b) Using a service wire, connect FL+ and FL- of the connector (on the side airbag assembly side) between the side airbag assembly (LH) and the airbag sensor assembly.
(c) Connect negative (-) terminal cable to the battery, and wait at least for 2 seconds.

CHECK:

(a) Turn the ignition switch to ACC or ON and wait at least for 20 seconds.
(b) Clear the DTC stored in memory
(See step 5 on page DI-349).
(c) Turn the ignition switch to LOCK, and wait at least for 20 seconds.
(d) Turn the ignition switch to ACC or ON, and wait at least for 20 seconds.
(e) Check DTC (See page DI-349).

OK:

DTC B0117/45 is not output.

HINT:
Codes other than code B0117/45 may be output at this time, but they are not relevant to this check.

NG	Replace airbag sensor assembly.

OK

4	Check side squib (LH).

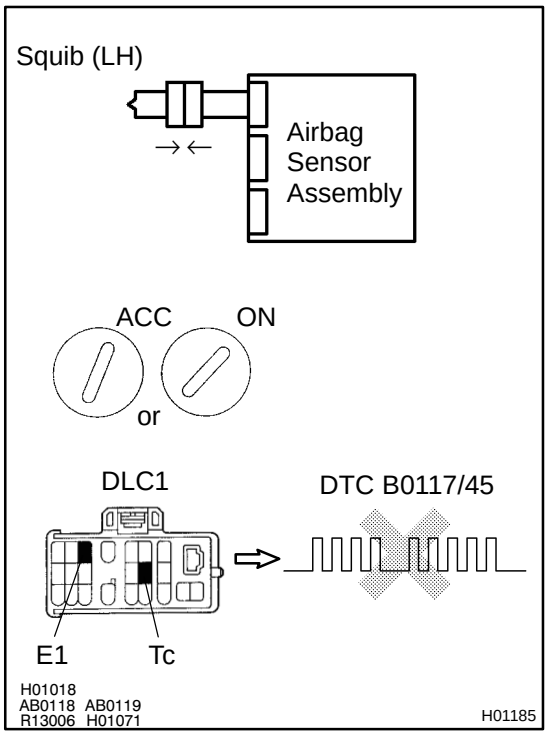

PREPARATION:

(a) Turn the ignition switch to LOCK.
(b) Disconnect negative (-) terminal cable from the battery, and wait at least for 90 seconds.
(c) Connect the front side airbag assembly (LH) connector.
(d) Connect negative (-) terminal cable to the battery, and wait at least for 2 seconds.

CHECK:

(a) Turn the ignition switch to ACC or ON, and wait at least for 20 seconds.
(b) Clear the DTC stored in memory
(See step 5 on page DI-349).
(c) Turn the ignition switch to LOCK, and wait at least for 20 seconds.
(d) Turn the ignition switch to ACC or ON, and wait at least for 20 seconds.
(e) Check the DTC (See page DI-349).

OK:

DTC B0117/45 is not output.

HINT:
Codes other than code B0117/45 may be output at this time, but they are not relevant to this check.

NG → **Replace front side airbag assembly (LH).**

OK

From the results of the above inspection, the malfunctioning part can now be considered normal. To make sure of this, use the simulation method to check. If the malfunctioning part can not be detected by the simulation method, replace all SRS components including the wire harness.

DI6MZ-01

DTC	B0118/46	Short in Side Squib (LH) Circuit (to B)

CIRCUIT DESCRIPTION

The side squib (LH) circuit consists of the airbag sensor assembly and side airbag assembly (LH).
It causes the SRS to deploy when the SRS deployment conditions are satisfied.
For details of the function of each component, see OPERATION on page RS-3 .
DTC B0118/46 is recorded when a B+ short is detected in the side squib (LH) circuit.

DTC No.	DTC Detecting Condition	Trouble Area
B0118/46	●Short circuit in side squib (LH) wire harness (to B+) ●Side squib (LH) malfunction ●Airbag sensor assembly malfunction	●Side airbag assembly (LH) ●Airbag sensor assembly ●Wire harness

WIRING DIAGRAM

See page DI-405 .

INSPECTION PROCEDURE

1	**Prepare for inspection (See step 1 on page DI-475).**

2	**Check side squib (LH) circuit.**

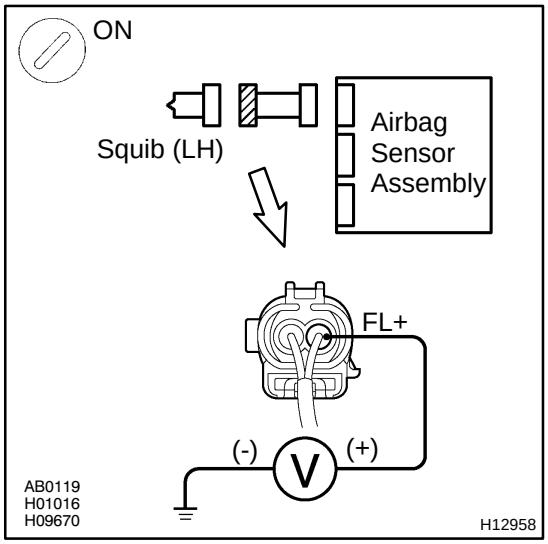

CHECK:

(a) Turn the ignition switch to ON.

(b) For the connector (on the side airbag assembly side) between the side airbag assembly (LH) and the airbag sensor assembly, measure the voltage between FL+ and body ground.

OK:

Voltage: 0 V

NG

Repair or replace harness or connector between side airbag assembly (LH) and airbag sensor assembly.

OK

3	Check airbag sensor assembly.

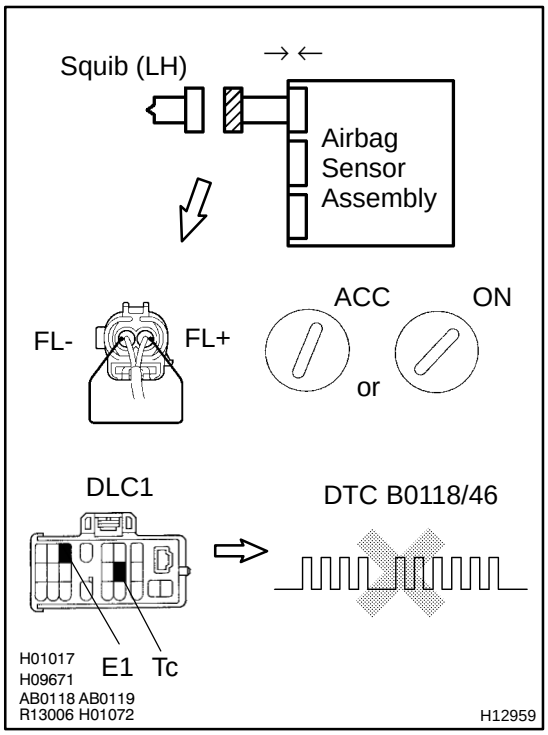

PREPARATION:

(a) Connect the connector to the airbag sensor assembly.
(b) Using a service wire, connect FL+ and FL- of the connector (on the side airbag assembly side) between the side airbag assembly (LH) and the airbag sensor assembly.
(c) Connect negative (-) terminal cable to the battery, and wait at least for 2 seconds.

CHECK:

(a) Turn the ignition switch to ACC or ON and wait at least for 20 seconds.
(b) Clear the DTC stored in memory
(See step 5 on page DI-349).
(c) Turn the ignition switch to LOCK, and wait at least for 20 seconds.
(d) Turn the ignition switch to ACC or ON, and wait at least for 20 seconds.
(e) Check the DTC (See page DI-349).

OK:

DTC B0118/46 is not output.

HINT:
Codes other than code B0118/46 may be output at this time, but they are not relevant to this check.

NG → **Replace airbag sensor assembly.**

OK

4	Check side squib (LH).

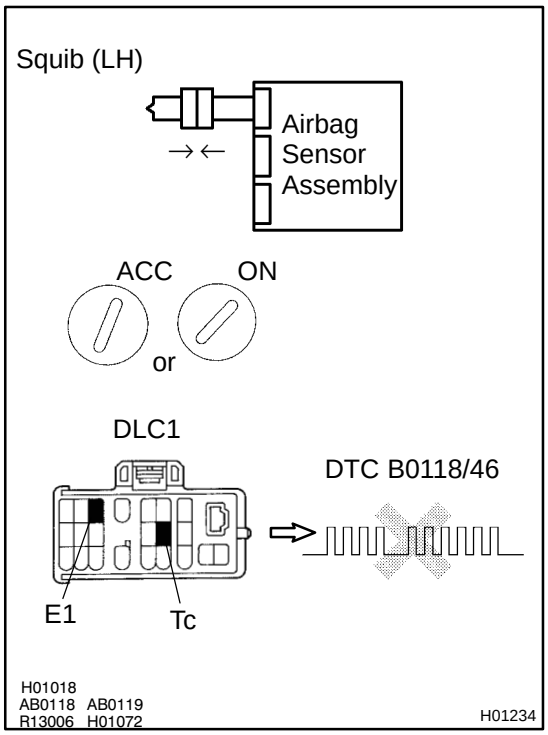

PREPARATION:

(a) Turn the ignition switch to LOCK.
(b) Disconnect negative (-) terminal cable from the battery, and wait at least for 90 seconds.
(c) Connect the side airbag assembly (LH) connector.
(d) Connect negative (-) terminal cable to the battery, and wait at least for 2 seconds.

CHECK:

(a) Turn the ignition switch to ACC or ON, and wait at least for 20 seconds.
(b) Clear the DTC stored in memory
(See step 5 on page DI-349).
(c) Turn the ignition switch to LOCK, and wait at least for 20 seconds.
(d) Turn the ignition switch to ACC or ON, and wait at least for 20 seconds.
(e) Check the DTC (See page DI-349).

OK:

DTC B0118/46 is not output.

HINT:
Codes other than code B0118/46 may be output at this time, but they are not relevant to this check.

NG	Replace side airbag assembly (LH).

OK

From the results of the above inspection, the malfunctioning part can now be considered normal. To make sure of this, use the simulation method to check. If the malfunctioning part can not be detected by the simulation method, replace all SRS components including the wire harness.

DI4D0-03

DTC	B0130/63	Short in P/T Squib (RH) Circuit

CIRCUIT DESCRIPTION

The P/T squib (RH) circuit consists of the airbag sensor assembly and seat belt pretensioner (RH).
It causes the SRS to deploy when the SRS deployment conditions are satisfied.
For details of the function of each component, see OPERATION on page RS-3 .
DTC B0130/63 is recorded when a short is detected in the P/T squib (RH) circuit.

DTC No.	DTC Detecting Condition	Trouble Area
B0130/63	●Short circuit between PR+ wire harness and PR- wire harness of squib ●P/T squib (RH) malfunction ●Airbag sensor assembly malfunction	●Seat belt pretensioner (RH) ●Airbag sensor assembly ●Wire harness

WIRING DIAGRAM

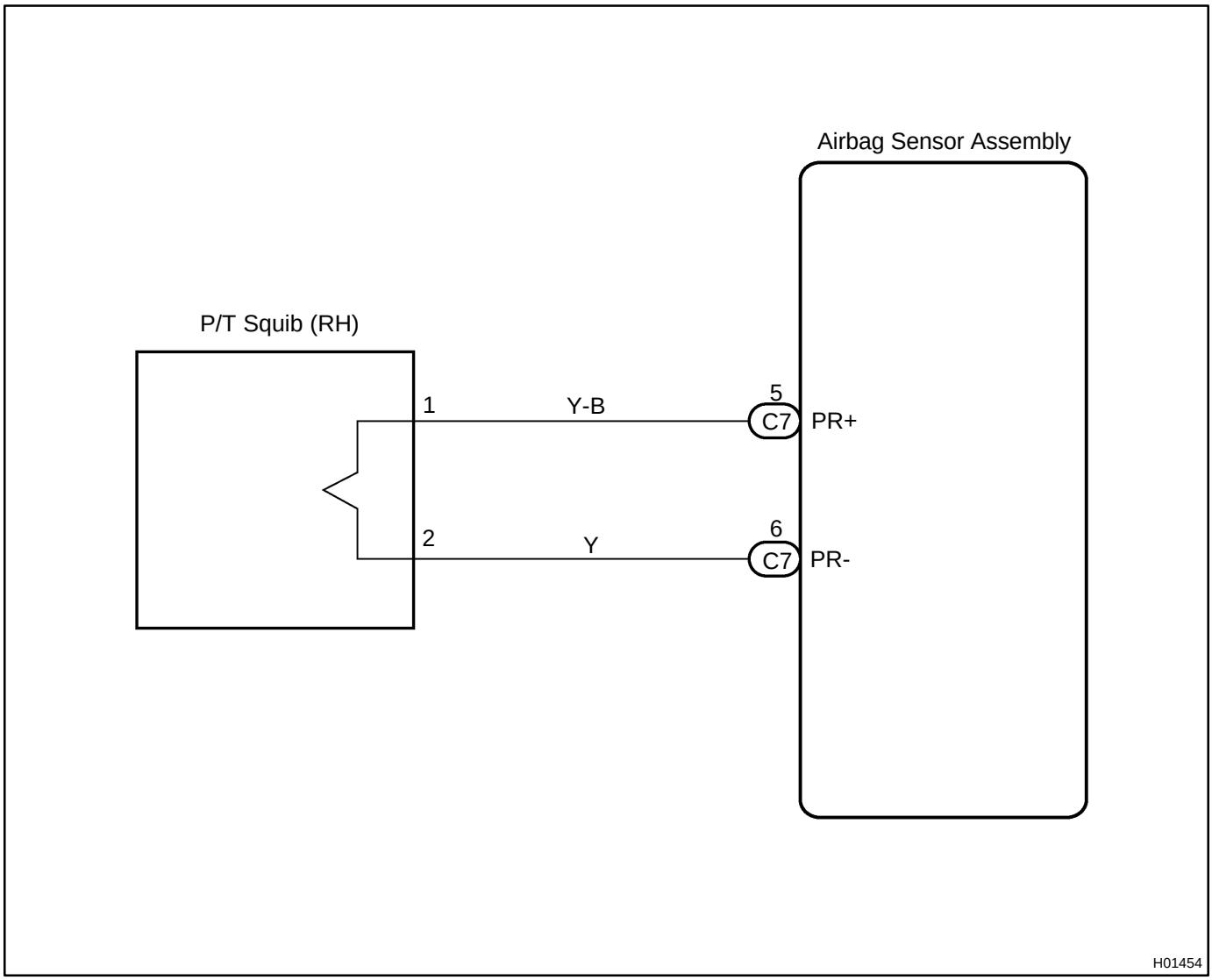

INSPECTION PROCEDURE

1	**Prepare for inspection (See step 1 on page DI-475).**

2	**Check P/T squib (RH) circuit.**

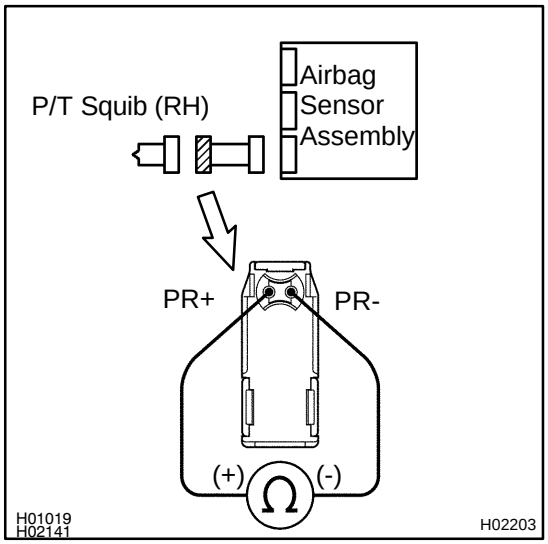

PREPARATION:

Release the airbag activation prevention mechanism of the connector (on the airbag sensor assembly side) between the airbag sensor assembly and the seat belt pretensioner (RH) (See page DI-349).

CHECK:

For the connector (on the seat belt pretensioner side) between the seat belt pretensioner (RH) and the airbag sensor assembly, measure the resistance between PR+ and PR-.

OK:

Resistance: 1 MΩ or Higher

NG → **Repair or replace harness or connector between seat belt pretensioner (RH) and airbag sensor assembly.**

OK

3	Check airbag sensor assembly.

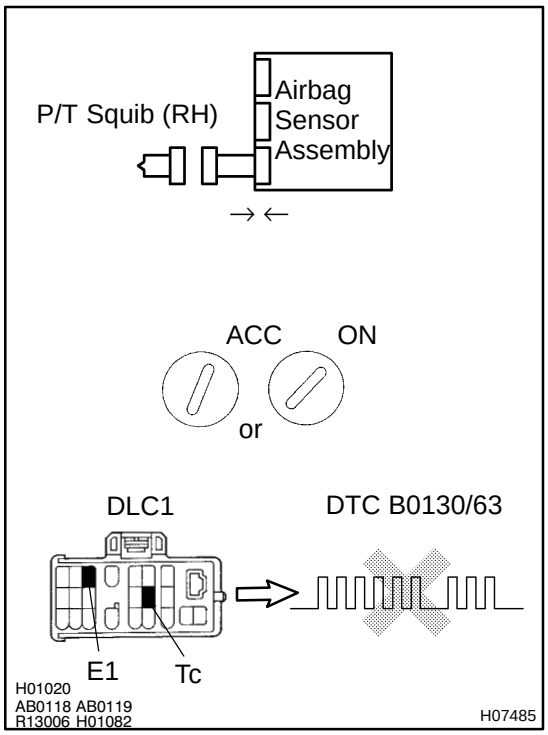

PREPARATION:

(a) Connect the connector to the airbag sensor assembly.
(b) Connect negative (-) terminal cable to the battery, and wait at least for 2 seconds.

CHECK:

(a) Turn the ignition switch to ACC or ON and wait at least for 20 seconds.
(b) Clear the DTC stored in memory (See page DI-349).
(c) Turn the ignition switch to LOCK, and wait at least for 20 seconds.
(d) Turn the ignition switch to ACC or ON, and wait at least for 20 seconds.
(e) Check the DTC (See page DI-349).

OK:

DTC B0130/63 is not output.

HINT:
Codes other than code B0130/63 may be output at this time, but they are not relevant to this check.

NG → **Replace airbag sensor assembly.**

OK

4	Check P/T squib (RH).

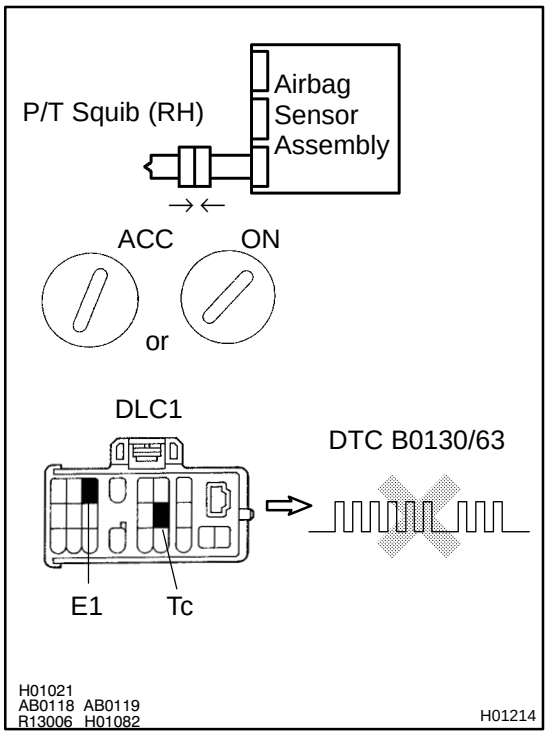

PREPARATION:

(a) Turn the ignition switch to LOCK.
(b) Disconnect negative (-) terminal cable from the battery, and wait at least for 90 seconds.
(c) Connect the seat belt pretensioner (RH) connector.
(d) Connect negative (-) terminal cable to the battery, and wait at least for 2 seconds.

CHECK:

(a) Turn the ignition switch to LOOK, and wait at least for 20 second.
(b) Turn the ignition switch to ACC or ON, and wait at least for 20 seconds.
(c) Clear the DTC stored in memory (See page DI-349).
(d) Turn the ignition switch to LOCK, and wait at least for 20 seconds.
(e) Turn the ignition switch to ACC or ON, and wait at least for 20 seconds.
(f) Check the DTC (See page DI-349).

OK:

DTC B0130/63 is not output.

HINT:

Codes other than code B0130/63 may be output at this time, but they are not relevant to this check.

NG → **Replace seat belt pretensioner (RH).**

OK

From the results of the above inspection, the malfunctioning part can now be considered normal. To make sure of this, use the simulation method to check.

DI4D1-03

DTC	B0131/64	Open in P/T Squib (RH) Circuit

CIRCUIT DESCRIPTION

The P/T squib circuit (RH) consists of the airbag sensor assembly and seat belt pretensioner (RH).
It causes the SRS to deploy when the SRS deployment conditions are satisfied.
For details of the function of each component, see OPERATION on page RS-3 .
DTC B0131/64 is recorded when an open is detected in the P/T squib (RH) circuit.

DTC No.	DTC Detecting Condition	Trouble Area
B0131/64	●Open circuit in PR+ wire harness or PR- wire harness of squib ●P/T squib (RH) malfunction ●Airbag sensor assembly malfunction	●Seat belt pretensioner (RH) ●Airbag sensor assembly ●Wire harness

WIRING DIAGRAM

See page DI-418 .

INSPECTION PROCEDURE

1	**Prepare for inspection (See step 1 on page DI-475).**

2	**Check P/T squib (RH) circuit.**

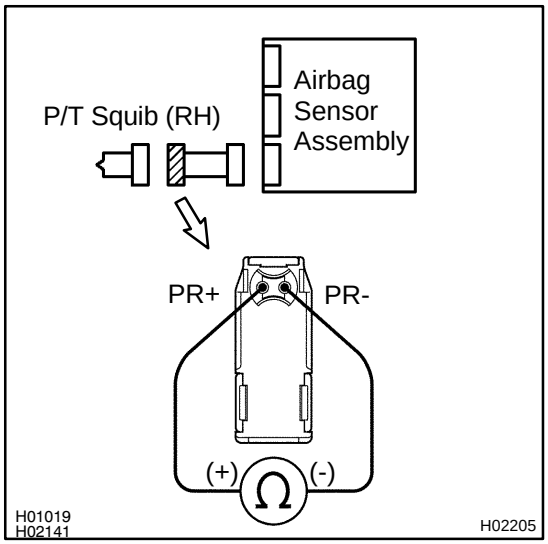

CHECK:

For the connector (on the seat belt pretensioner side) between the seat belt pretensioner (RH) and the airbag sensor assembly, measure the resistance between PR+ and PR-.

OK:

Resistance: Below 1 Ω

NG → **Repair or replace harness or connector between seat belt pretensioner (RH) and airbag sensor assembly.**

OK

3	Check airbag sensor assembly.

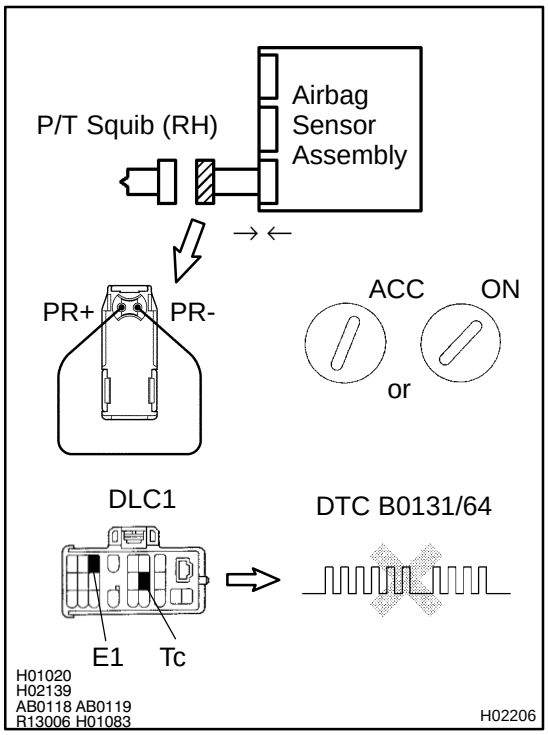

PREPARATION:

(a) Connect the connector to the airbag sensor assembly.

(b) Using a service wire, connect PR+ and PR- of the connector (on the seat belt pretensioner side) between the seat belt pretensioner (RH) and the airbag sensor assembly.

(c) Connect negative (-) terminal cable to the battery, and wait at least for 2 seconds.

CHECK:

(a) Turn the ignition switch to ACC or ON and wait at least for 20 seconds.

(b) Clear the DTC stored in memory (See page DI-349).

(c) Turn the ignition switch to LOCK, and wait at least for 20 seconds.

(d) Turn the ignition switch to ACC or ON, and wait at least for 20 seconds.

(e) Check the DTC (See page DI-349).

OK:

DTC B0131/64 is not output.

HINT:

Codes other than code B0131/64 may be output at this time, but they are not relevant to this check.

NG	Replace airbag sensor assembly.

OK

4	Check P/T squib (RH).

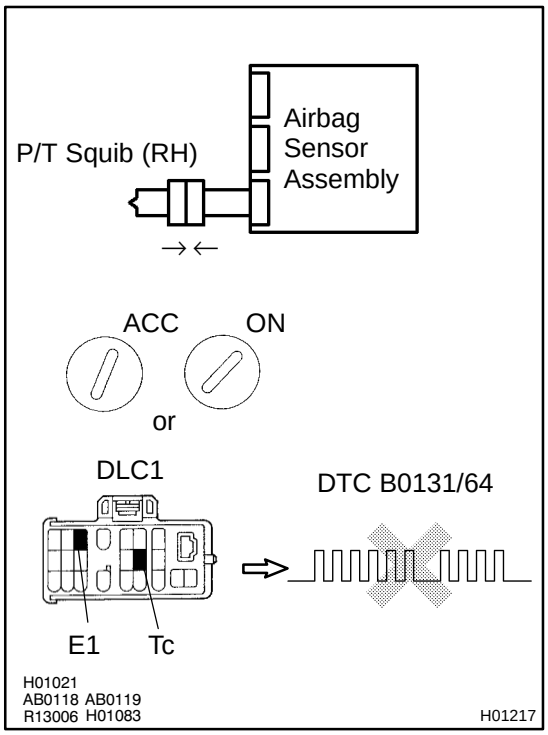

PREPARATION:

(a) Turn the ignition switch to LOCK.
(b) Disconnect negative (-) terminal cable from the battery, and wait at least for 90 seconds.
(c) Connect the seat belt pretensioner (RH) connector.
(d) Connect negative (-) terminal cable to the battery, and wait at least for 2 seconds.

CHECK:

(a) Turn the ignition switch to ACC or ON, and wait at least for 20 seconds.
(b) Clear the DTC stored in memory (See page DI-349).
(c) Turn the ignition switch to LOCK, and wait at least for 20 seconds.
(d) Turn the ignition switch to ACC or ON, and wait at least for 20 seconds.
(e) Check the DTC (See page DI-349).

OK:

DTC B0131/64 is not output.

HINT:

Codes other than code B0131/64 may be output at this time, but they are not relevant to this check.

NG → **Replace seat belt pretensioner (RH).**

OK

From the results of the above inspection, the malfunctioning part can now be considered normal. To make sure of this, use the simulation method to check.

DI4D2-02

DTC	B0132/61	Short in P/T Squib (RH) Circuit (to Ground)

CIRCUIT DESCRIPTION

The P/T squib (RH) circuit consists of the airbag sensor assembly and seat belt pretensioner (RH).
It causes the SRS to deploy when the SRS deployment conditions are satisfied.
For details of the function of each component, see OPERATION on page RS-3 .
DTC B0132/61 is recorded when a ground short is detected in the P/T squib (RH) circuit.

DTC No.	DTC Detecting Condition	Trouble Area
B0132/61	●Short circuit in P/T squib (RH) wire harness (to ground) ●P/T squib (RH) malfunction ●Airbag sensor assembly malfunction	●Seat belt pretensioner (RH) ●Airbag sensor assembly ●Wire harness

WIRING DIAGRAM

See page DI-418 .

INSPECTION PROCEDURE

1	**Prepare for inspection (See step 1 on page DI-475).**

2	**Check P/T squib (RH) circuit.**

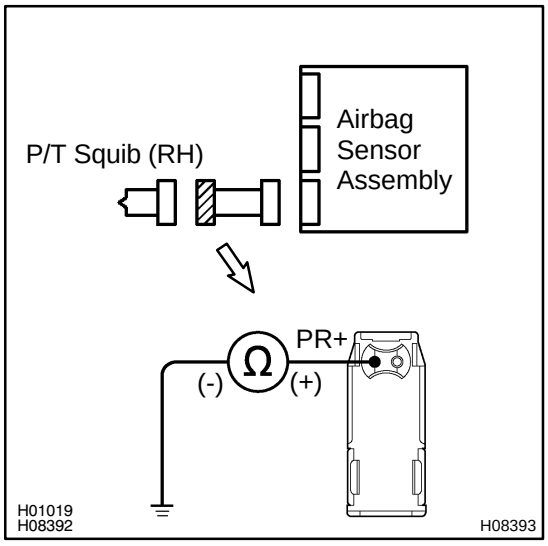

CHECK:

For the connector (on the seat belt pretensioner side) between the seat belt pretensioner (RH) and the airbag sensor assembly, measure the resistance between PR+ and body ground.

OK:

Resistance: 1 MΩ or Higher

NG → **Repair or replace harness or connector between seat belt pretensioner (RH) and airbag sensor assembly.**

OK

3	Check airbag sensor assembly.

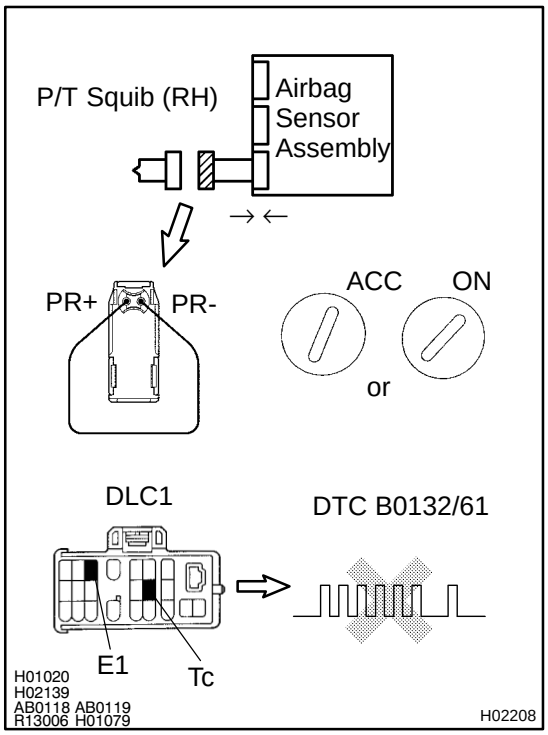

PREPARATION:

(a) Connect the connector to the airbag sensor assembly.

(b) Using a service wire, connect PR+ and PR- of the connector (on the seat belt pretensioner side) between the seat belt pretensioner (RH) and the airbag sensor assembly.

(c) Connect negative (-) terminal cable to the battery, and wait at least for 2 seconds.

CHECK:

(a) Turn the ignition switch to ACC or ON and wait at least for 20 seconds.

(b) Clear the DTC stored in memory
(See step 5 on page DI-349).

(c) Turn the ignition switch to LOCK, and wait at least for 20 seconds.

(d) Turn the ignition switch to ACC or ON, and wait at least for 20 seconds.

(e) Check the DTC (See page DI-349).

OK:

DTC B0132/61 is not output.

HINT:

Codes other than code B0132/61 may be output at this time, but they are not relevant to this check.

NG	Replace airbag sensor assembly.

OK

4	Check P/T squib (RH).

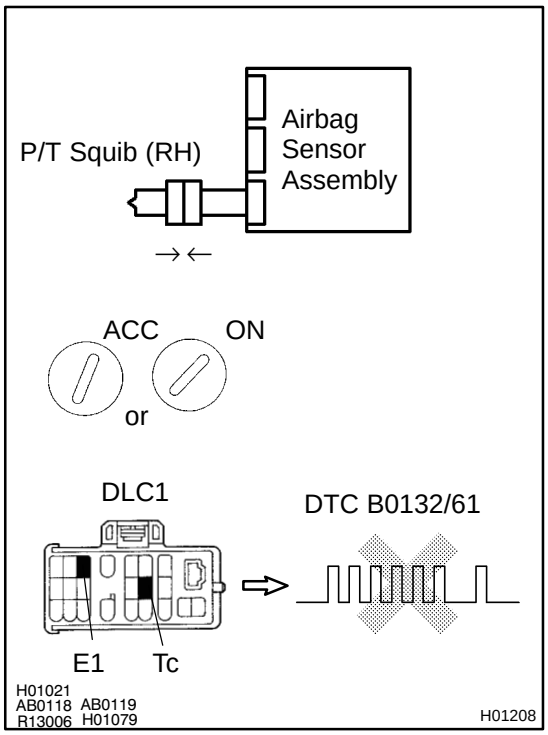

PREPARATION:

(a) Turn the ignition switch to LOCK.
(b) Disconnect negative (-) terminal cable from the battery, and wait at least for 90 seconds.
(c) Connect the seat belt pretensioner (RH) connector.
(d) Connect negative (-) terminal cable to the battery, and wait at least for 2 seconds.

CHECK:

(a) Turn the ignition switch to ACC or ON, and wait at least for 20 seconds.
(b) Clear the DTC stored in memory
(See step 5 on page DI-349).
(c) Turn the ignition switch to LOCK, and wait at least for 20 seconds.
(d) Turn the ignition switch to ACC or ON, and wait at least for 20 seconds.
(e) Check the DTC (See page DI-349).

OK:

DTC B0132/61 is not output.

HINT:
Codes other than code B0132/61 may be output at this time, but they are not relevant to this check.

NG	Replace seat belt pretensioner (RH).

OK

From the results of the above inspection, the malfunctioning part can now be considered normal. To make sure of this, use the simulation method to check. If the malfunctioning part can not be detected by the simulation method, replace all SRS components including the wire harness.

DI4D3-02

DTC	B0132/62	Short in P/T Squib (RH) Circuit (to B+)

CIRCUIT DESCRIPTION

The P/T squib (RH) circuit consists of the airbag sensor assembly and seat belt pretensioner (RH).
It causes the SRS to deploy when the SRS deployment conditions are satisfied.
For details of the function of each component, see OPERATION on page RS-3 .
DTC B0133/62 is recorded when a B+ short is detected in the P/T squib (RH) circuit.

DTC No.	DTC Detecting Condition	Trouble Area
B0133/62	●Short circuit in seat belt pretensioner (RH) wire harness (to B+) ●P/T squib (RH) malfunction ●Airbag sensor assembly malfunction	●Seat belt pretensioner (RH) ●Airbag sensor assembly ●Wire harness

WIRING DIAGRAM

See page DI-418 .

INSPECTION PROCEDURE

1	**Prepare for inspection (See step 1 on page DI-475).**

2	**Check P/T squib (RH) circuit.**

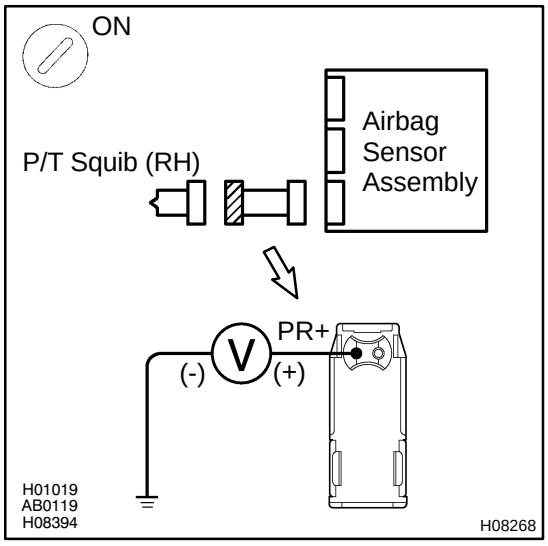

CHECK:

(a) Turn the ignition switch to ON.

(b) For the connector (on the seat belt pretensioner side) between the seat belt pretensioner (RH) and the airbag sensor assembly, measure the voltage between PR+ and body ground.

OK:

Voltage: 0 V

NG → **Repair or replace harness or connector between seat belt pretensioner (RH) and airbag sensor assembly.**

OK

3	Check airbag sensor assembly.

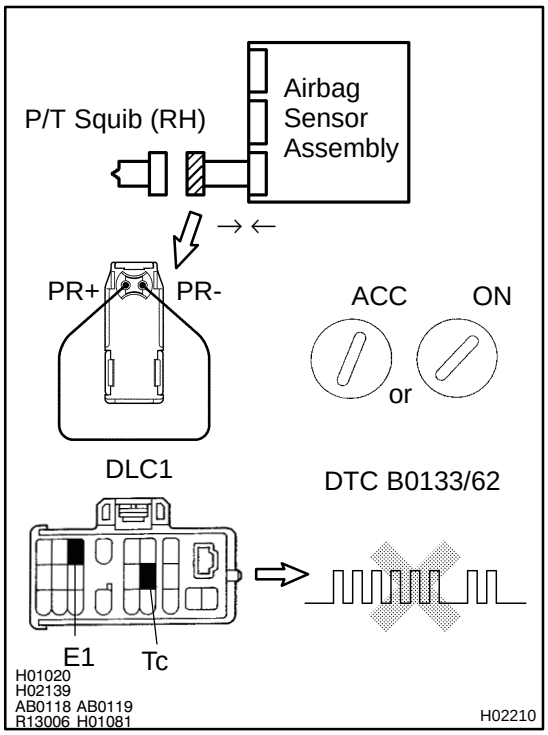

PREPARATION:

(a) Connect the connector to the airbag sensor assembly.

(b) Using a service wire, connect PR+ and PR- of the connector (on the seat belt pretensioner side) between the seat belt pretensioner (RH) and the airbag sensor assembly.

(c) Connect negative (-) terminal cable to the battery, and wait at least for 2 seconds.

CHECK:

(a) Turn the ignition switch to ACC or ON and wait at least for 20 seconds.

(b) Clear the DTC stored in memory
(See step 5 on page DI-349).

(c) Turn the ignition switch to LOCK, and wait at least for 20 seconds.

(d) Turn the ignition switch to ACC or ON, and wait at least for 20 seconds.

(e) Check the DTC (See page DI-349).

OK:

DTC B0133/62 is not output.

HINT:

Codes other than code B0133/62 may be output at this time, but they are not relevant to this check.

NG → **Replace airbag sensor assembly.**

OK

4	Check P/T squib (RH).

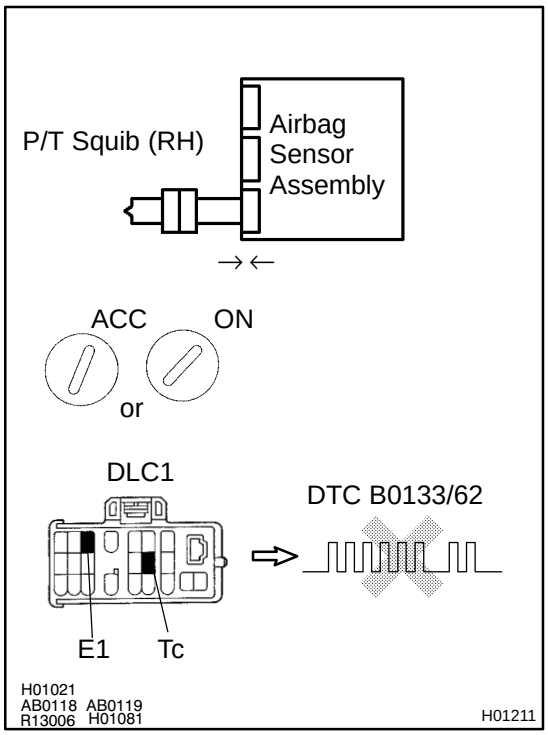

PREPARATION:

(a) Turn ignition switch to LOCK.
(b) Disconnect negative (-) terminal cable from the battery, and wait at least for 90 seconds.
(c) Connect the seat belt pretensioner (RH) connector.
(d) Connect negative (-) terminal cable to the battery, and wait at least for 2 seconds.

CHECK:

(a) Turn the ignition switch to ACC or ON, and wait at least for 20 seconds.
(b) Clear the DTC stored in memory
(See step 5 on page DI-349).
(c) Turn the ignition switch to LOCK, and wait at least for 20 seconds.
(d) Turn the ignition switch to ACC or ON, and wait at least for 20 seconds.
(e) Check the DTC (See page DI-349).

OK:

DTC B0133/62 is not output.

HINT:
Codes other than code B0133/62 may be output at this time, but they are not relevant to this check.

NG	Replace seat belt pretensioner (RH).

OK

From the results of the above inspection, the malfunctioning part can now be considered normal. To make sure of this, use the simulation method to check. If the malfunctioning part can not be detected by the simulation method, replace all SRS components including the wire harness.

DI4D4-03

DTC	B0135/73	Short in P/T Squib (LH) Circuit

CIRCUIT DESCRIPTION

The P/T squib (LH) circuit consists of the airbag sensor assembly and seat belt pretensioner (LH).
It causes the SRS to deploy when the SRS deployment conditions are satisfied.
For details of the function of each component, see OPERATION on page RS-3 .
DTC B0135/73 is recorded when a short is detected in the P/T squib (LH) circuit.

DTC No.	DTC Detecting Condition	Trouble Area
B0135/73	●Short circuit between PL+ wire harness and PL- wire harness of squib ●P/T squib (LH) malfunction ●Airbag sensor assembly malfunction	●Seat belt pretensioner (LH) ●Airbag sensor assembly ●Wire harness

WIRING DIAGRAM

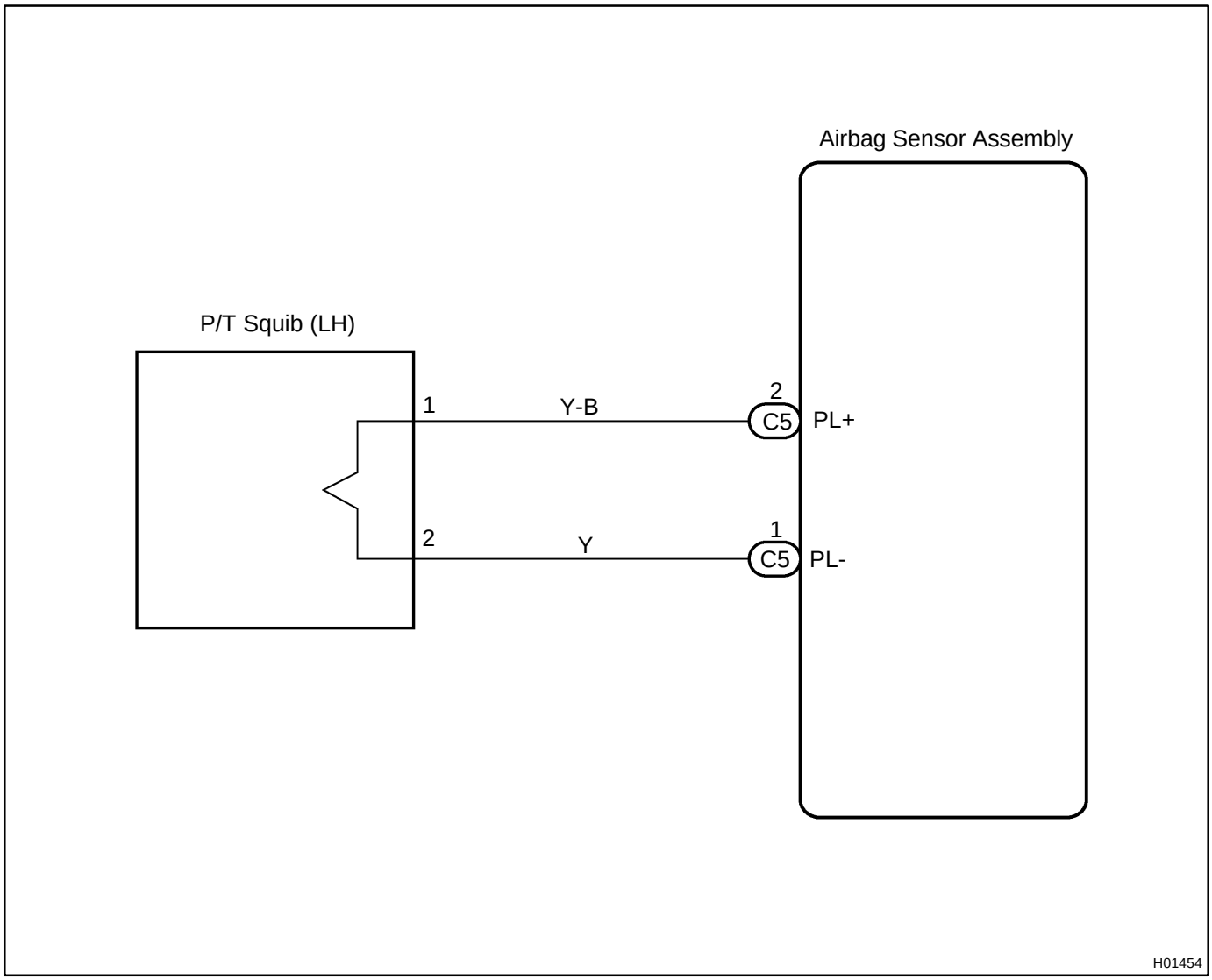

INSPECTION PROCEDURE

1	**Prepare for inspection (See step 1 on page DI-475).**

2	**Check P/T squib (LH) circuit.**

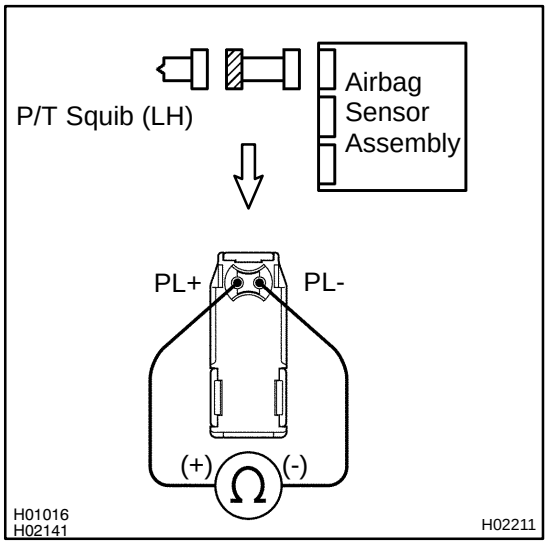

PREPARATION:

Release the airbag activation prevention mechanism of the connector (on the airbag sensor assembly side) between the airbag sensor assembly and the seat belt pretensioner (LH) (See page DI-349).

CHECK:

For the connector (on the seat belt pretensioner side) between the seat belt pretensioner (LH) and the airbag sensor assembly, measure the resistance between PL+ and PL-.

OK:

Resistance: 1 MΩ or Higher

NG → **Repair or replace harness or connector between seat belt pretensioner (LH) and airbag sensor assembly.**

OK

3	Check airbag sensor assembly.

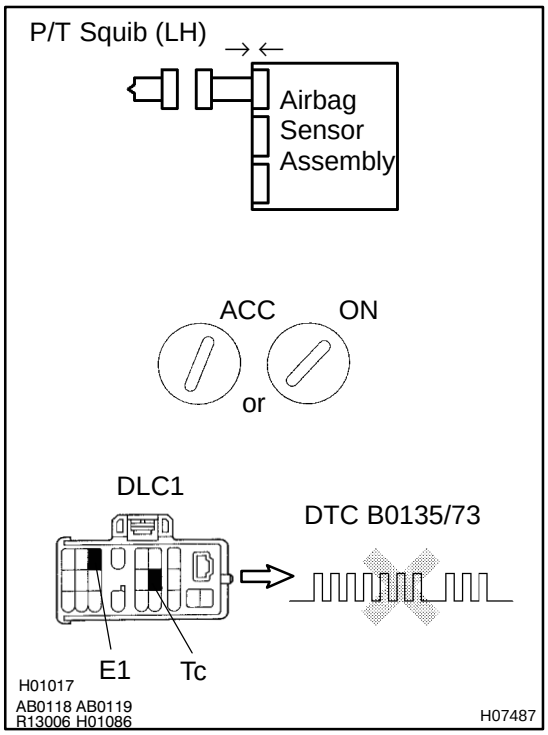

PREPARATION:

(a) Connect the connector to the airbag sensor assembly.
(b) Connect negative (-) terminal cable to the battery, and wait at least for 2 seconds.

CHECK:

(a) Turn the ignition switch to ACC or ON and wait at least for 20 seconds.
(b) Clear the DTC stored in memory (See page DI-349).
(c) Turn the ignition switch to LOCK, and wait at least for 20 seconds.
(d) Turn the ignition switch to ACC or ON, and wait at least for 20 seconds.
(e) Check the DTC (See page DI-349).

OK:

DTC B0135/73 is not output.

HINT:

Codes other than code B0135/73 may be output at this time, but they are not relevant to this check.

NG → **Replace airbag sensor assembly.**

OK

4	Check P/T squib (LH).

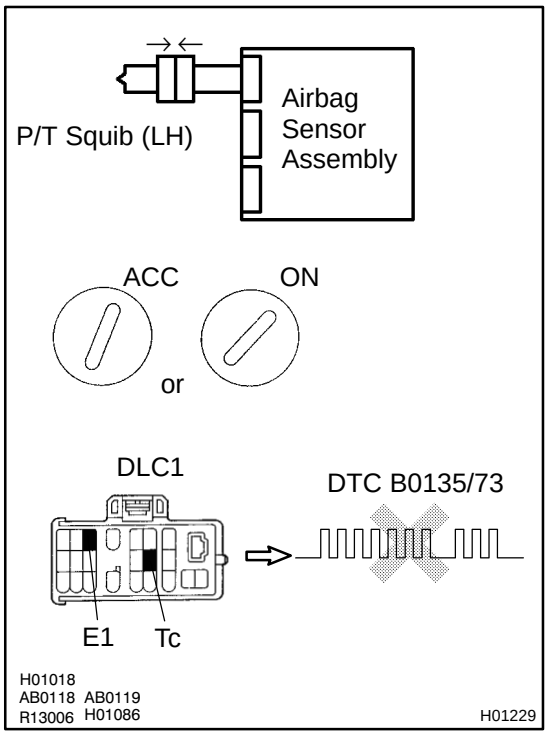

PREPARATION:

(a) Turn the ignition switch to LOCK.
(b) Disconnect negative (-) terminal cable from the battery, and wait at least for 90 seconds.
(c) Connect the seat belt pretensioner (LH) connector.
(d) Connect negative (-) terminal cable to the battery, and wait at least for 2 seconds.

CHECK:

(a) Turn the ignition switch to LOOK, and wait at least for 20 second.
(b) Turn the ignition switch to ACC or ON, and wait at least for 20 seconds.
(c) Clear the DTC stored in memory (See page DI-349).
(d) Turn the ignition switch to LOCK, and wait at least for 20 seconds.
(e) Turn the ignition switch to ACC or ON, and wait at least for 20 seconds.
(f) Check the DTC (See page DI-349).

OK:

DTC B0135/73 is not output.

HINT:

Codes other than code B0135/73 may be output at this time, but they are not relevant to this check.

NG	Replace seat belt pretensioner (LH).

OK

From the results of the above inspection, the malfunctioning part can now be considered normal. To make sure of this, use the simulation method to check.

DI4D5-03

DTC	B0136/74	Open in P/T Squib (LH) Circuit

CIRCUIT DESCRIPTION

The P/T squib circuit (LH) consists of the airbag sensor assembly and seat belt pretensioner (LH).
It causes the SRS to deploy when the SRS deployment conditions are satisfied.
For details of the function of each component, see OPERATION on page RS-3 .
DTC B0136/74 is recorded when an open is detected in the P/T squib (LH) circuit.

DTC No.	DTC Detecting Condition	Trouble Area
B0136/74	●Open circuit in PL+ wire harness or PL- wire harness of squib ●P/T squib (LH) malfunction ●Airbag sensor assembly malfunction	●Seat belt pretensioner (LH) ●Airbag sensor assembly ●Wire harness

WIRING DIAGRAM

See page DI-431 .

INSPECTION PROCEDURE

1	**Prepare for inspection (See step 1 on page DI-475).**

2	**Check P/T squib (LH) circuit.**

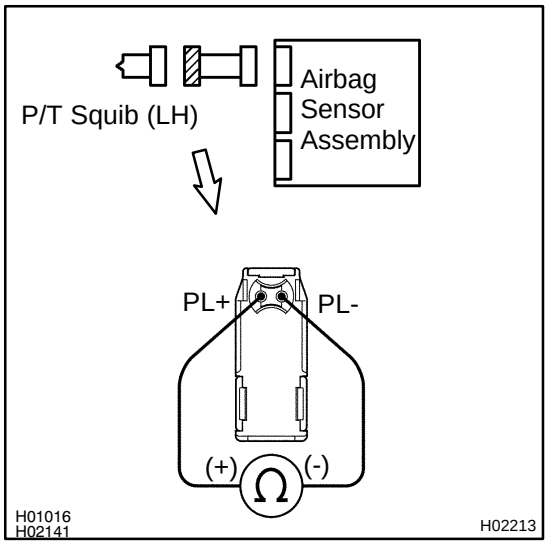

CHECK:

For the connector (on the seat belt pretensioner side) between the seat belt pretensioner (LH) and the airbag sensor assembly, measure the resistance between PL+ and PL-.

OK:

Resistance: Below 1 Ω

NG → **Repair or replace harness or connector between seat belt pretensioner (LH) and airbag sensor assembly.**

OK

3	Check airbag sensor assembly.

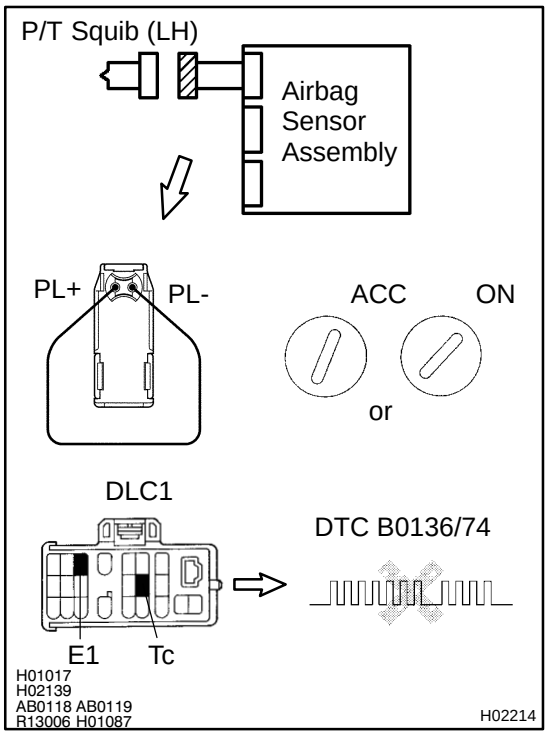

PREPARATION:

(a) Connect the connector to the airbag sensor assembly.
(b) Using a service wire, connect PL+ and PL- of the connector (on the seat belt pretensioner side) between the seat belt pretensioner (LH) and the airbag sensor assembly.
(c) Connect negative (-) terminal cable to the battery, and wait at least for 2 seconds.

CHECK:

(a) Turn the ignition switch to ACC or ON and wait at least for 20 seconds.
(b) Clear the DTC stored in memory (See page DI-349).
(c) Turn the ignition switch to LOCK, and wait at least for 20 seconds.
(d) Turn the ignition switch to ACC or ON, and wait at least for 20 seconds.
(e) Check the DTC (See page DI-349).

OK:

DTC B0136/74 is not output.

HINT:

Codes other than code B0136/74 may be output at this time, but they are not relevant to this check.

NG	Replace airbag sensor assembly.

OK

4	Check P/T squib (LH).

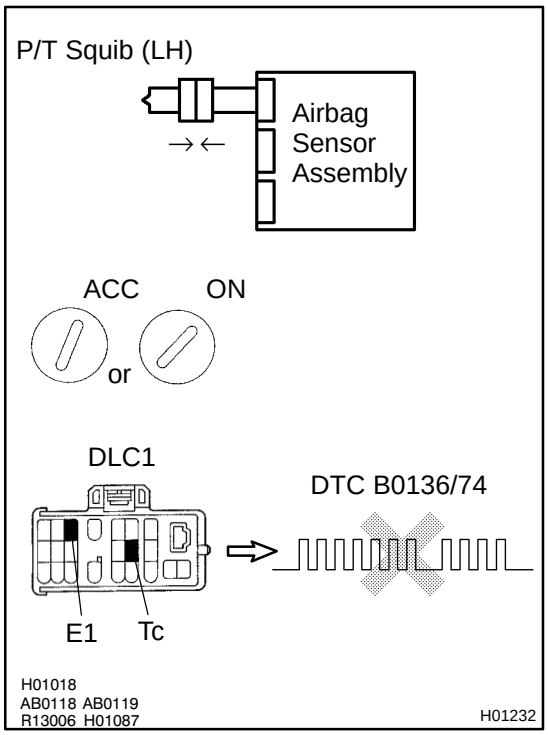

PREPARATION:

(a) Turn the ignition switch to LOCK.
(b) Disconnect negative (-) terminal cable from the battery, and wait at least for 90 seconds.
(c) Connect the seat belt pretensioner (LH) connector.
(d) Connect negative (-) terminal cable to the battery, and wait at least for 2 seconds.

CHECK:

(a) Turn the ignition switch to ACC or ON, and wait at least for 20 seconds.
(b) Clear the DTC stored in memory (See page DI-349).
(c) Turn the ignition switch to LOCK, and wait at least for 20 seconds.
(d) Turn the ignition switch to ACC or ON, and wait at least for 20 seconds.
(e) Check the DTC (See page DI-349).

OK:

DTC B0136/74 is not output.

HINT:

Codes other than code B0136/74 may be output at this time, but they are not relevant to this check.

NG → **Replace seat belt pretensioner (LH).**

OK

From the results of the above inspection, the malfunctioning part can now be considered normal. To make sure of this, use the simulation method to check.

DI4D6-02

DTC	B0137/71	Short in P/T Squib (LH) Circuit (to Ground)

CIRCUIT DESCRIPTION

The P/T squib (LH) circuit consists of the airbag sensor assembly and seat belt pretensioner (LH).
It causes the SRS to deploy when the SRS deployment conditions are satisfied.
For details of the function of each component, see OPERATION on page RS-3 .
DTC B0137/71 is recorded when a ground short is detected in the P/T squib (LH) circuit.

DTC No.	DTC Detecting Condition	Trouble Area
B0137/71	●Short circuit in P/T squib (LH) wire harness (to ground) ●P/T squib (LH) malfunction ●Airbag sensor assembly malfunction	●Seat belt pretensioner (LH) ●Airbag sensor assembly ●Wire harness

WIRING DIAGRAM

See page DI-431 .

INSPECTION PROCEDURE

1	**Prepare for inspection (See step 1 on page DI-475).**

2	**Check P/T squib (LH) circuit.**

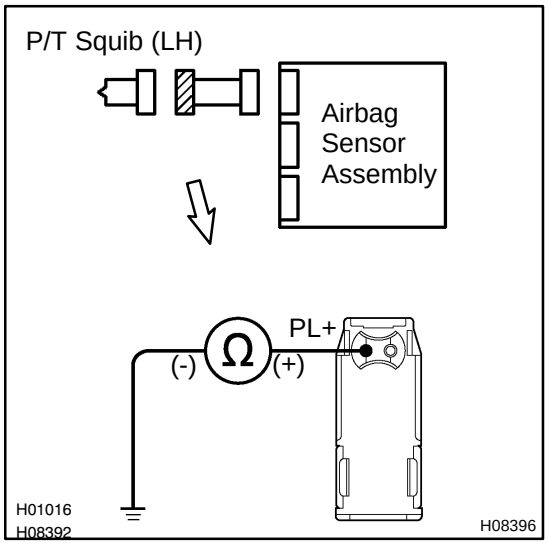

CHECK:

For the connector (on the seat belt pretensioner side) between the seat belt pretensioner (LH) and the airbag sensor assembly, measure the resistance between PL+ and body ground.

OK:

Resistance: 1 MΩ or Higher

NG → **Repair or replace harness or connector between seat belt pretensioner (LH) and airbag sensor assembly.**

OK

3	Check airbag sensor assembly.

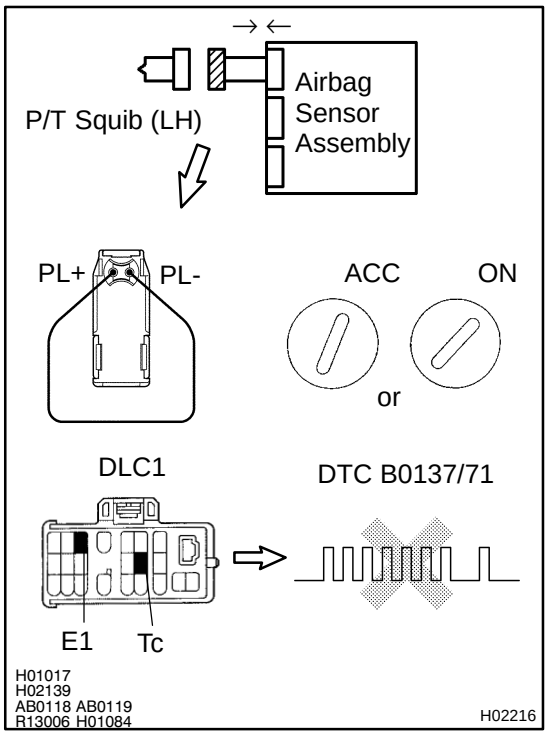

PREPARATION:

(a) Connect the connector to the airbag sensor assembly.

(b) Using a service wire, connect PL+ and PL- of the connector (on the seat belt pretensioner side) between the seat belt pretensioner (LH) and the airbag sensor assembly.

(c) Connect negative (-) terminal cable to the battery, and wait at least for 2 seconds.

CHECK:

(a) Turn the ignition switch to ACC or ON and wait at least for 20 seconds.

(b) Clear the DTC stored in memory
(See step 5 on page DI-349).

(c) Turn the ignition switch to LOCK, and wait at least for 20 seconds.

(d) Turn the ignition switch to ACC or ON, and wait at least for 20 seconds.

(e) Check the DTC (See page DI-349).

OK:

DTC B0137/71 is not output.

HINT:

Codes other than code B0137/71 may be output at this time, but they are not relevant to this check.

NG	Replace airbag sensor assembly.

OK

4	Check P/T squib (LH).

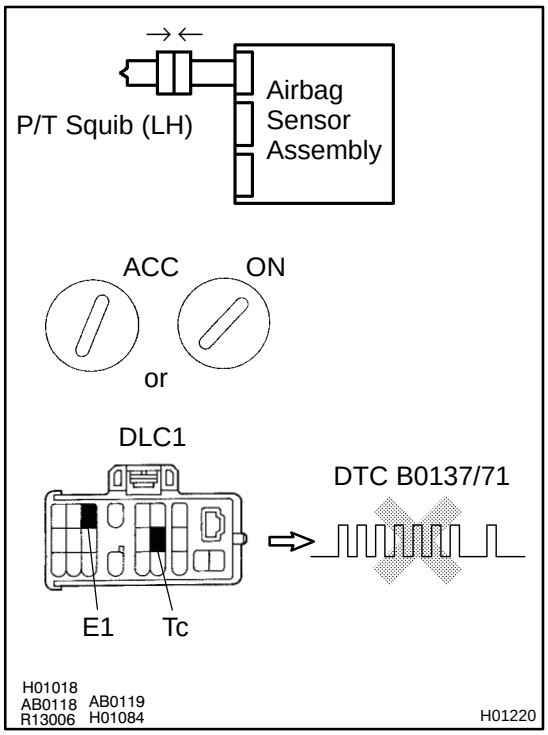

PREPARATION:

(a) Turn the ignition switch to LOCK.
(b) Disconnect negative (-) terminal cable from the battery, and wait at least for 90 seconds.
(c) Connect the seat belt pretensioner (LH) connector.
(d) Connect negative (-) terminal cable to the battery, and wait at least for 2 seconds.

CHECK:

(a) Turn the ignition switch to ACC or ON, and wait at least for 20 seconds.
(b) Clear the DTC stored in memory
(See step 5 on page DI-349).
(c) Turn the ignition switch to LOCK, and wait at least for 20 seconds.
(d) Turn the ignition switch to ACC or ON, and wait at least for 20 seconds.
(e) Check the DTC (See page DI-349).

OK:

DTC B0137/71 is not output.

HINT:
Codes other than code B0137/71 may be output at this time, but they are not relevant to this check.

NG → **Replace seat belt pretensioner (LH).**

OK

From the results of the above inspection, the malfunctioning part can now be considered normal. To make sure of this, use the simulation method to check. If the malfunctioning part can not be detected by the simulation method, replace all SRS components including the wire harness.

DI4D7-02

DTC	B0138/72	Short in P/T Squib (LH) Circuit (to B+)

CIRCUIT DESCRIPTION

The P/T squib (LH) circuit consists of the airbag sensor assembly and seat belt pretensioner (LH).
It causes the SRS to deploy when the SRS deployment conditions are satisfied.
For details of the function of each component, see OPERATION on page RS-3 .
DTC B0138/72 is recorded when a B+ short is detected in the P/T squib (LH) circuit.

DTC No.	DTC Detecting Condition	Trouble Area
B0138/72	●Short circuit in seat belt pretensioner (LH) wire harness (to B+) ●P/T squib (LH) malfunction ●Airbag sensor assembly malfunction	●Seat belt pretensioner (LH) ●Airbag sensor assembly ●Wire harness

WIRING DIAGRAM

See page DI-431 .

INSPECTION PROCEDURE

1	**Prepare for inspection (See step 1 on page DI-475).**

2	**Check P/T squib (LH) circuit.**

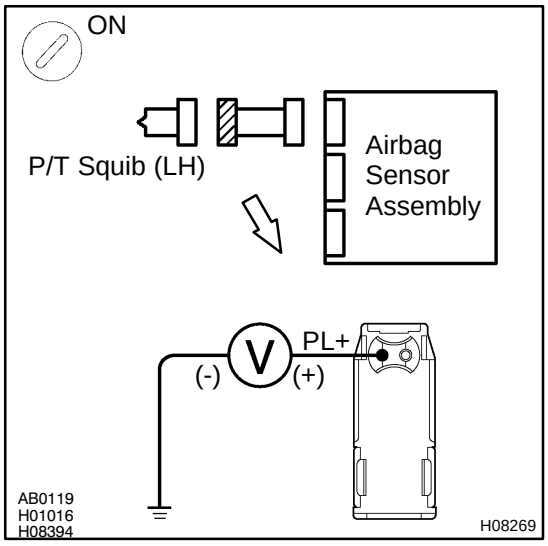

CHECK:

(a) Turn the ignition switch to ON.

(b) For the connector (on the seat belt pretensioner side) between the seat belt pretensioner (LH) and the airbag sensor assembly, measure the voltage between PL+ and body ground.

OK:

Voltage: 0 V

NG → **Repair or replace harness or connector between seat belt pretensioner (LH) and airbag sensor assembly.**

OK

3	Check airbag sensor assembly.

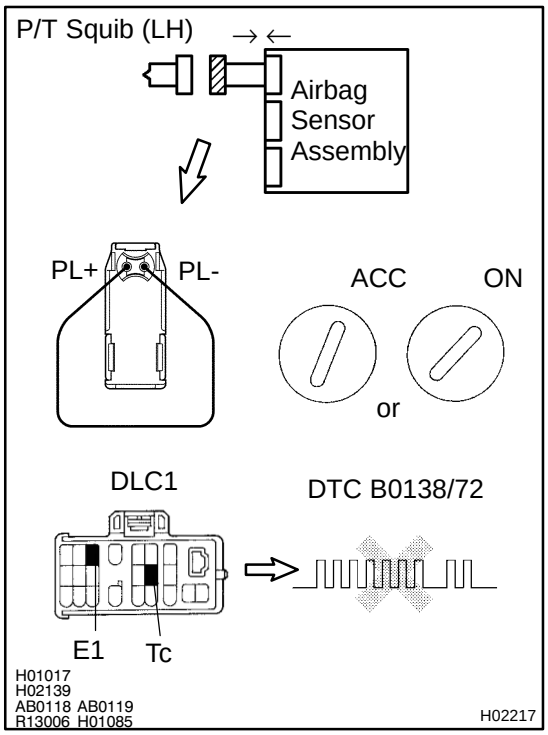

PREPARATION:

(a) Connect the connector to the airbag sensor assembly.
(b) Using a service wire, connect PL+ and PL- of the connector (on the seat belt pretensioner side) between the seat belt pretensioner (LH) and the airbag sensor assembly.
(c) Connect negative (-) terminal cable to the battery, and wait at least for 2 seconds.

CHECK:

(a) Turn the ignition switch to ACC or ON and wait at least for 20 seconds.
(b) Clear the DTC stored in memory
(See step 5 on page DI-349).
(c) Turn the ignition switch to LOCK, and wait at least for 20 seconds.
(d) Turn the ignition switch to ACC or ON, and wait at least for 20 seconds.
(e) Check the DTC (See page DI-349).

OK:

DTC B0138/72 is not output.

HINT:
Codes other than code B0138/72 may be output at this time, but they are not relevant to this check.

NG	Replace airbag sensor assembly.

OK

4	Check P/T squib (LH).

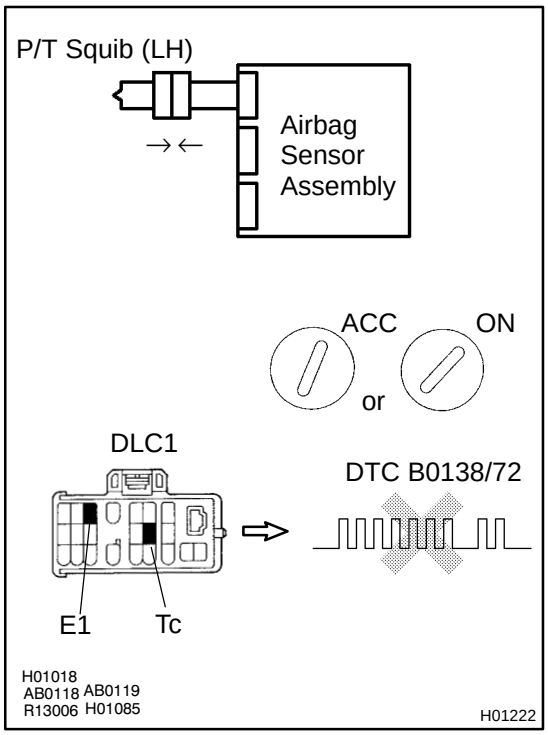

PREPARATION:

(a) Turn the ignition switch to LOCK.
(b) Disconnect negative (-) terminal cable from the battery, and wait at least for 90 seconds.
(c) Connect the seat belt pretensioner (LH) connector.
(d) Connect negative (-) terminal cable to the battery, and wait at least for 2 seconds.

CHECK:

(a) Turn the ignition switch to ACC or ON, and wait at least for 20 seconds.
(b) Clear the DTC stored in memory
(See step 5 on page DI-349).
(c) Turn the ignition switch to LOCK, and wait at least for 20 seconds.
(d) Turn the ignition switch to ACC or ON, and wait at least for 20 seconds.
(e) Check the DTC (See page DI-349).

OK:

DTC B0138/72 is not output.

HINT:
Codes other than code B0138/72 may be output at this time, but they are not relevant to this check.

NG	Replace seat belt pretensioner (LH).

OK

From the results of the above inspection, the malfunctioning part can now be considered normal. To make sure of this, use the simulation method to check. If the malfunctioning part can not be detected by the simulation method, replace all SRS components including the wire harness.

DI4D8-02

DTC	B1100/31	Airbag Sensor Assembly Malfunction

CIRCUIT DESCRIPTION

The airbag sensor assembly consists of a airbag sensor, safing sensor, drive circuit, diagnosis circuit and ignition control, etc.
It receives signals from the airbag sensor, judges whether or not the SRS must be activated, and detects diagnosis system malfunction.
DTC B1100/31 is recorded when occurrence of a malfunction in the airbag sensor assembly is detected.

DTC No.	DTC Detecting Condition	Trouble Area
B1100/31	●Airbag sensor assembly malfunction	●Airbag sensor assembly

INSPECTION PROCEDURE

HINT:
When a malfunction code other than code B1100/31 is displayed at the same time, first repair the malfunction indicated by the malfunction code other than code B1100/31.

1	**Prepare for inspection (See step 1 on page DI-475).**

2	**Check voltage at IG2 and ACC of airbag sensor assembly.**

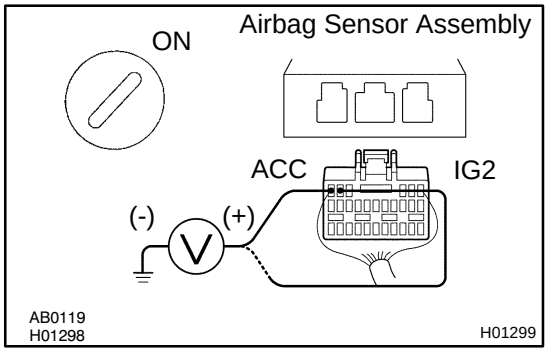

CHECK:

(a) Turn the ignition switch to ON.
(b) Measure the voltage between body ground and each of terminals IG2 and ACC of the airbag sensor assembly connector.

OK:

Voltage: 10 - 14 V

NG	**Check that an abnormality occurs on the battery and charging system.**

OK

3	Is DTC B1100/31 output again?

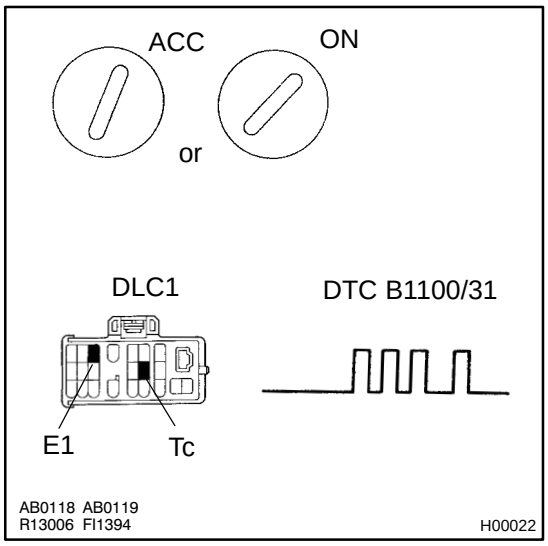

PREPARATION:

Clear the DTC (See step 5 on page DI-349).

CHECK:

(a) Turn the ignition switch to LOCK, and wait at least for 20 seconds.

(b) Turn the ignition switch to ACC or ON, and wait at least for 20 seconds.

(c) Repeat operation in step (a) and (b) at least 5 times.

(d) Check the DTC (See page DI-349).

HINT:

Codes other than code B1100/31 may be output at this time, but they are not relevant to this check.

NO → **Using simulation method, reproduce malfunction symptoms (See page IN-20).**

YES

Replace airbag sensor assembly.

DI6N0-01

DTC	B1140/32	Side Airbag Sensor Assembly (RH) Malfunction

CIRCUIT DESCRIPTION

The side airbag sensor assembly (RH) consists of the safing sensor, diagnosis circuit and lateral deceleration sensor, etc.
It receives signals from the lateral deceleration sensor, judges whether or not the SRS must be activated, and detects diagnosis system malfunction.
DTC B1140/32 is recorded when occurrence of a malfunction in the side airbag sensor assembly (RH) is detected.

DTC No.	DTC Detecting Condition	Trouble Area
B1140/32	●Side airbag sensor assembly (RH) malfunction	●Side airbag sensor assembly (RH) ●Airbag sensor assembly ●Wire harness

WIRING DIAGRAM

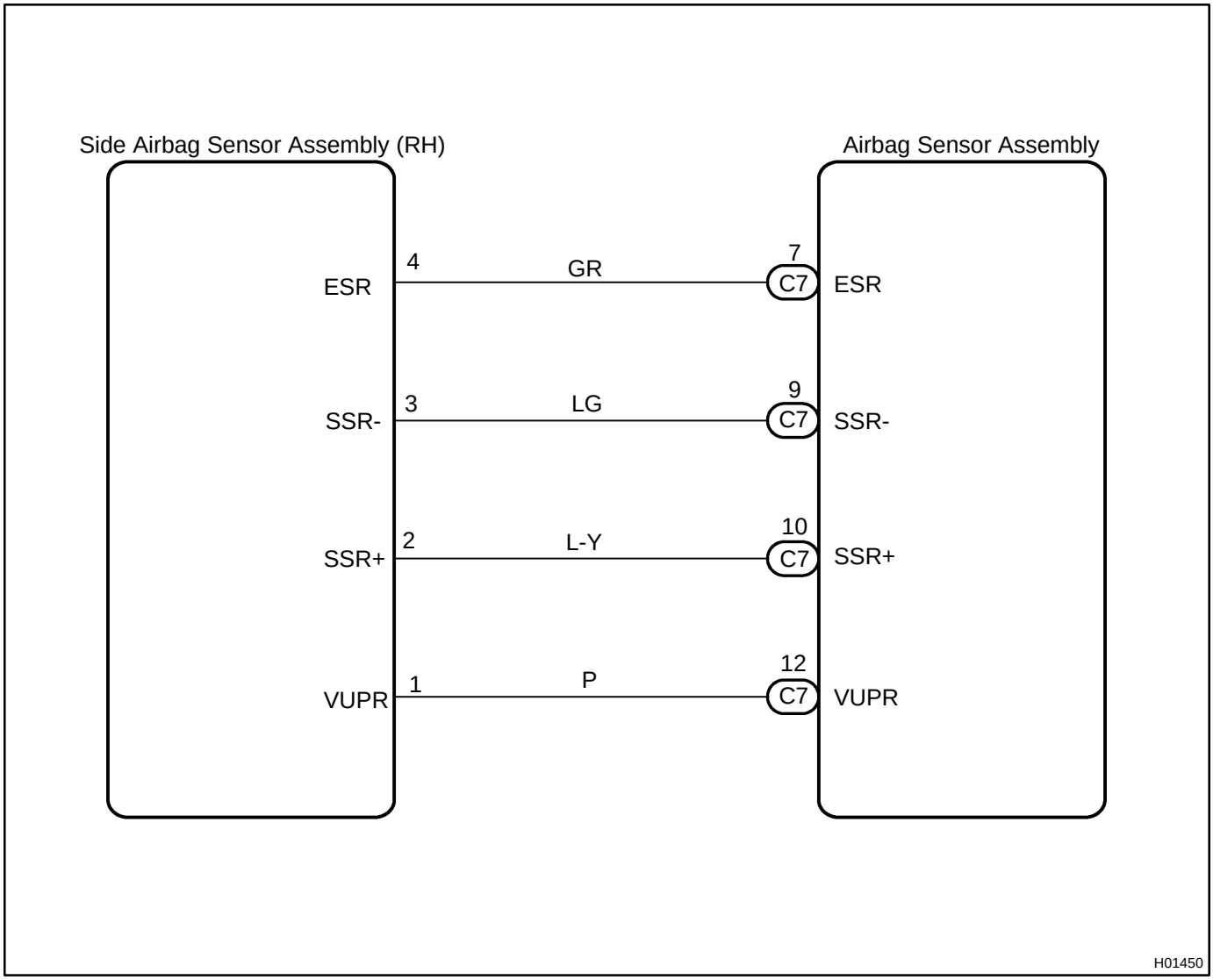

INSPECTION PROCEDURE

1	**Is DTC B1140/32 out put?**

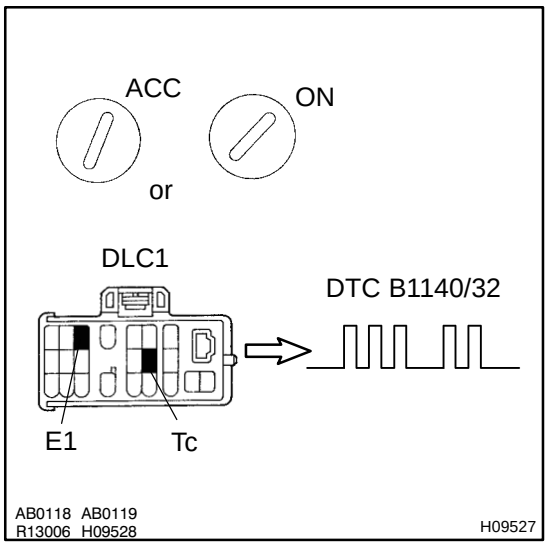

CHECK:

(a) Turn the ignition switch to ACC or ON, and wait at least for 20 seconds.
(b) Clear the DTC stored in memory (See page DI-349).
(c) Turn the ignition switch to LOCK, and wait at least for 20 seconds.
(d) Turn the ignition switch to ACC or ON, and wait at least for 20 seconds.
(e) Check the DTC (See page DI-349).

HINT:

Codes other than code B1140/32 may be output at this time, but they are not relevant to this check.

NO → **The malfunctioning part can now be considered normal. To make sure of this, use the simulation method to check.**

YES

2	**Is connector of side airbag sensor assembly (RH) properly connected?**

3	**Prepare for inspection (See step 1 on DI-475).**

4	Check wire harness.

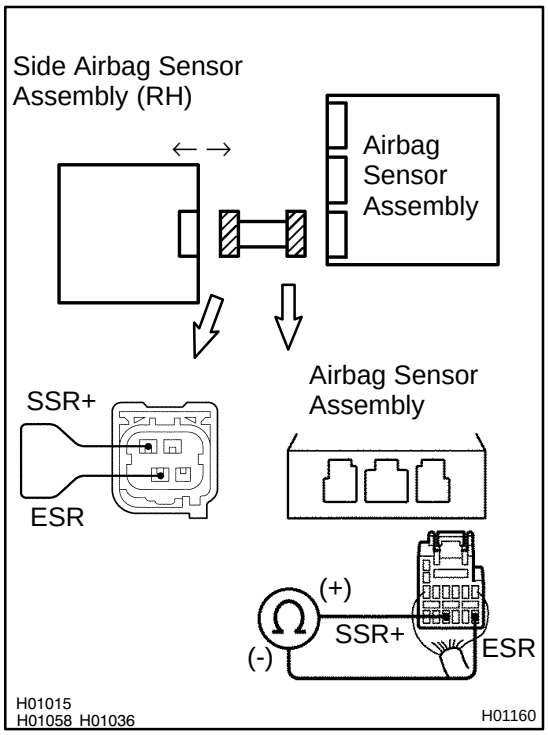

PREPARATION:

(a) Disconnect the side airbag sensor assembly (RH) connector.

(b) Using a service wire, connect SSR+ and ESR of the connector (on the side airbag sensor assembly side) between the side airbag sensor assembly (RH) and airbag sensor assembly.

CHECK:

For the connector (on the airbag sensor assembly side) between the side airbag sensor assembly (RH) and the airbag sensor assembly, measure the resistance between SSR+ and ESR.

OK:

Resistance: Below 1 Ω

NG → **Repair or replace harness or connector between side airbag sensor assembly (RH) and airbag sensor assembly.**

OK

5	**Check wire harness.**

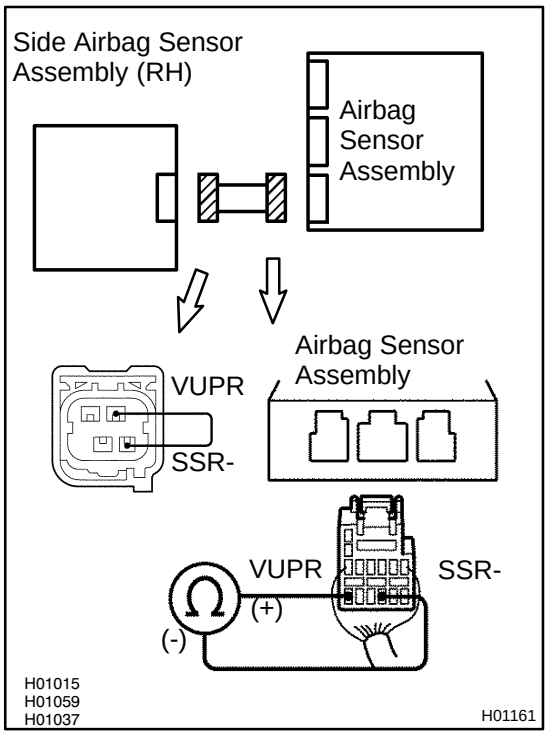

PREPARATION:

Using a service wire, connect VUPR and SSR- of the connector (on the side airbag sensor assembly side) between the side airbag sensor assembly (RH) and airbag sensor assembly.

CHECK:

For the connector (on the airbag sensor assembly side) between the side airbag sensor assembly (RH) and the airbag sensor assembly, measure the resistance between VUPR and SSR-.

OK:

Resistance: Below 1 Ω

NG → **Repair or replace harness or connector between side airbag sensor assembly (RH) and airbag sensor assembly.**

OK

6	Check wire harness (to ground).

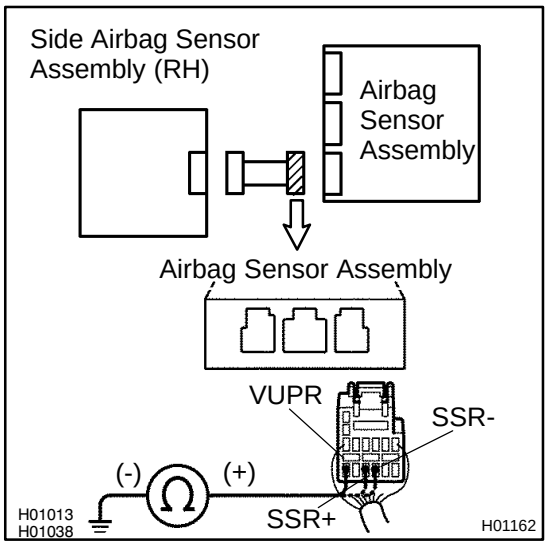

CHECK:

For the connector (on the airbag sensor assembly side) between the side airbag sensor assembly (RH) and the airbag sensor assembly, measure the resistance between body ground and each of SSR+, VUPR and SSR-.

OK:

Resistance: 1M Ω or Higher

NG → **Repair or replace harness or connector between side airbag sensor assembly (RH) and airbag sensor assembly.**

OK

7	Check wire harness (to B+).

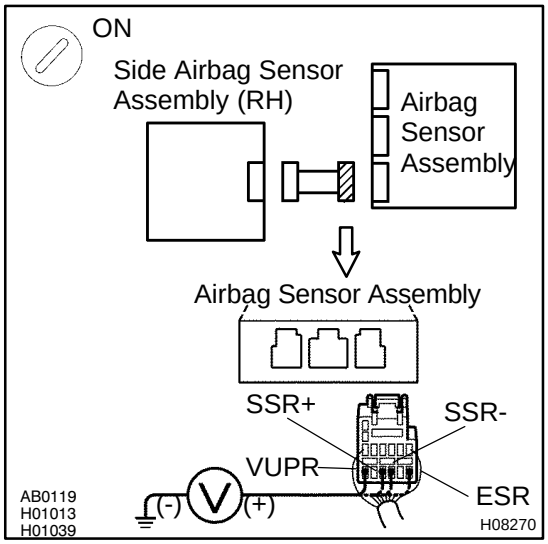

CHECK:

(a) Turn the ignition switch to ON.

(b) For the connector (on the airbag sensor assembly side) between the side airbag sensor assembly (RH) and the airbag sensor assembly, measure the voltage between the body ground and each of SSR+, VUPR, ESR and SSR-.

OK:

Voltage: 0 V

NG → **Repair or replace harness or connector between side airbag sensor assembly (RH) and airbag sensor assembly.**

OK

8	Is DTC B1140/32 out put again?

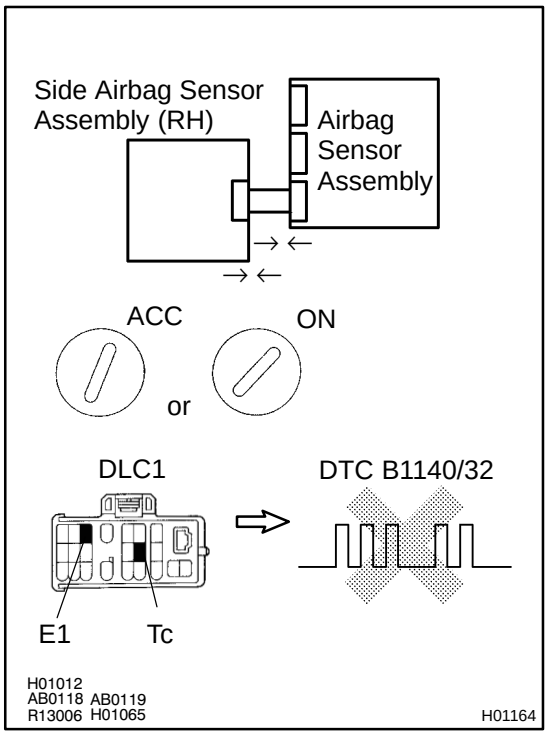

PREPARATION:

(a) Connect the connector to the side airbag sensor assembly (RH).
(b) Connect the connector to the airbag sensor assembly.
(c) Connect negative (-) terminal cable to the battery, and wait at least for 2 seconds.

CHECK:

(a) Turn the ignition switch to ACC or ON, and wait at least for 20 seconds.
(b) Clear the DTC stored in memory
(See step 5 on page DI-349).
(c) Turn the ignition switch to LOCK, and wait at least for 20 seconds.
(d) Turn the ignition switch to ACC or ON, and wait at least for 20 seconds.
(e) Check the DTC (See page DI-349).

HINT:

Codes other than code B1140/32 may be output at this time, but they are not relevant to this check.

YES	Go to step 9.

NO

From the results of the above inspection, the malfunctioning part can now be considered normal. To make sure of this, use the simulation method to check.

9	Check airbag sensor assembly.

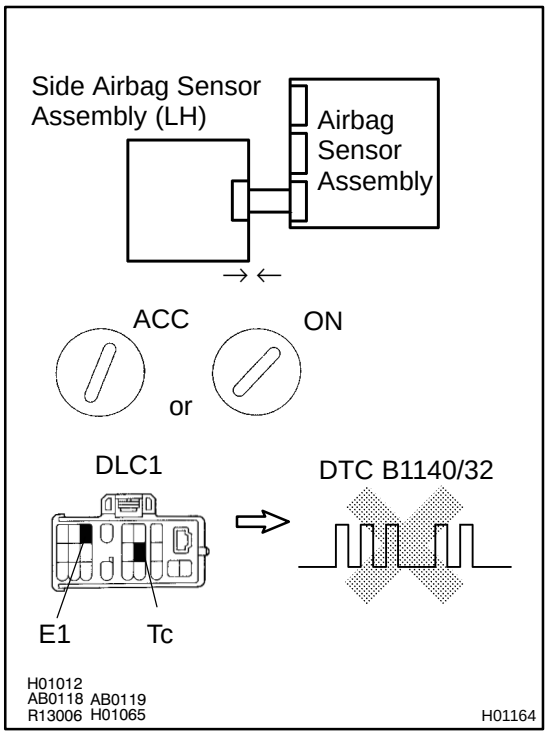

PREPARATION:

(a) Turn the ignition switch to LOCK.

(b) Disconnect negative (-) terminal cable from the battery, and wait at least for 90 seconds.

(c) Disconnect the side airbag sensor (RH) from the connector and connect the side airbag sensor (LH) to the connector.

(d) Connect negative (-) terminal cable to the battery, and wait at least for 2 seconds.

CHECK:

(a) Turn the ignition switch to ACC or ON, and wait at least for 20 seconds.

(b) Clear the DTC stored in memory
(See step 5 on page DI-349).

(c) Turn the ignition switch to LOCK, and wait at least for 20 seconds.

(d) Turn the ignition switch to ACC or ON, and wait at least for 20 seconds.

(e) Check the DTC (See page DI-349).

OK:

DTC B1140/32 is not output.

HINT:

Codes other than code B1140/32 may be output at this time, but they are not relevant to this check.

NG	Replace airbag sensor assembly.

OK

10	Check side airbag sensor assembly (RH).

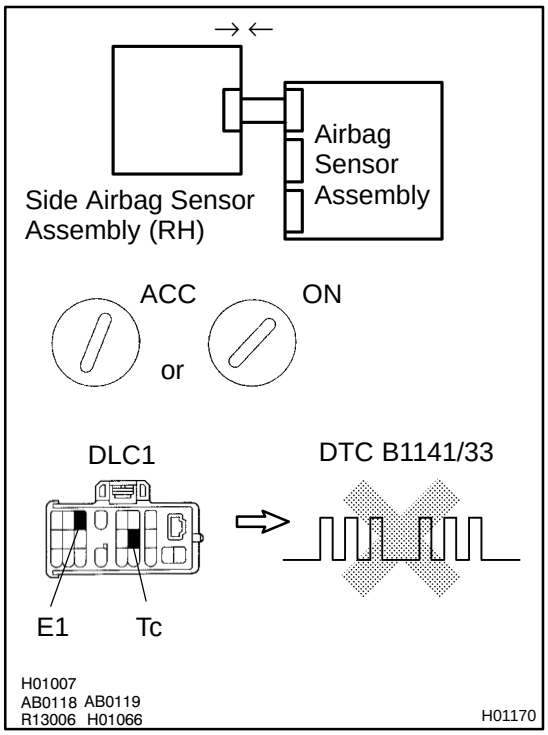

PREPARATION:

(a) Turn the ignition switch to LOCK.

(b) Disconnect negative (-) terminal cable from the battery, and wait at least for 90 seconds.

(c) Connect the side airbag sensor (RH) to the connector that the side airbag sensor (LH) was connected to.

(d) Connect negative (-) terminal cable to the battery, and wait at least for 2 seconds.

CHECK:

(a) Turn the ignition switch to ACC or ON, and wait at least for 20 seconds.

(b) Clear the DTC stored in memory
(See step 5 on page DI-349).

(c) Turn the ignition switch to LOCK, and wait at least for 20 seconds.

(d) Turn the ignition switch to ACC or ON, and wait at least for 20 seconds.

(e) Check the DTC (See page DI-349).

OK:

DTC B1141/33 is not output.

HINT:

Codes other than code B1141/33 may be output at this time, but they are not relevant to this check.

NG → **Replace side airbag sensor assembly (RH).**

OK

From the results of the above inspection, the malfunctioning part can now be considered normal. To make sure of this, use the simulation method to check.

DI6N1-01

DTC	B1141/33	Side Airbag Sensor Assembly (LH) Malfunction

CIRCUIT DESCRIPTION

The side airbag sensor assembly (LH) consists of the safing sensor, diagnosis circuit and lateral deceleration sensor, etc.
It receives signals from the lateral deceleration sensor, judges whether or not the SRS must be activated, and detects diagnosis system malfunction.
DTC B1141/33 is recorded when occurrence of a malfunction in the side airbag sensor assembly (LH) is detected.

DTC No.	DTC Detecting Condition	Trouble Area
B1141/33	●Side airbag sensor assembly (LH) malfunction	●Side airbag sensor assembly (LH) ●Airbag sensor assembly ●Wire harness

WIRING DIAGRAM

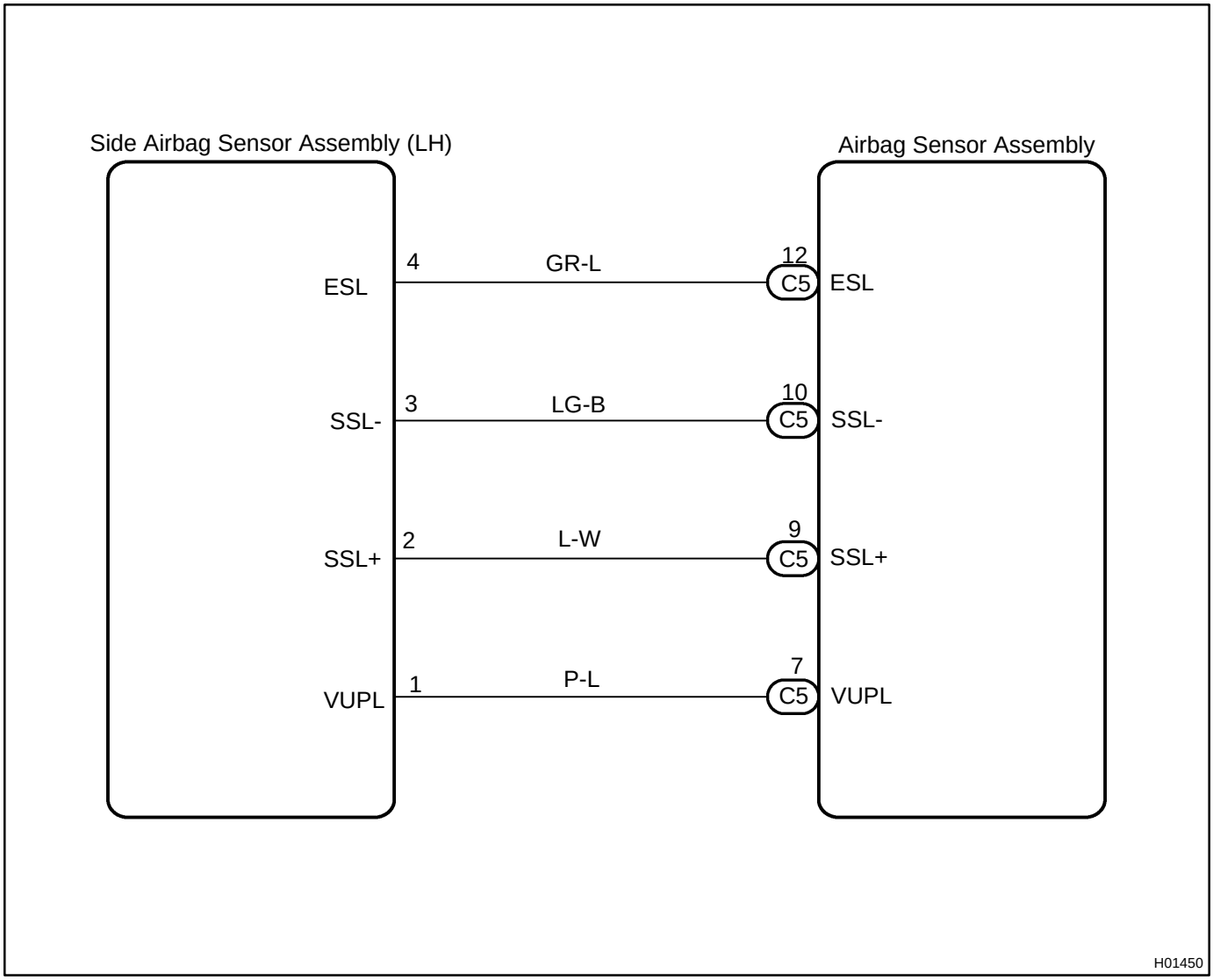

H01450

INSPECTION PROCEDURE

1	**Is DTC B1141/33 out put?**

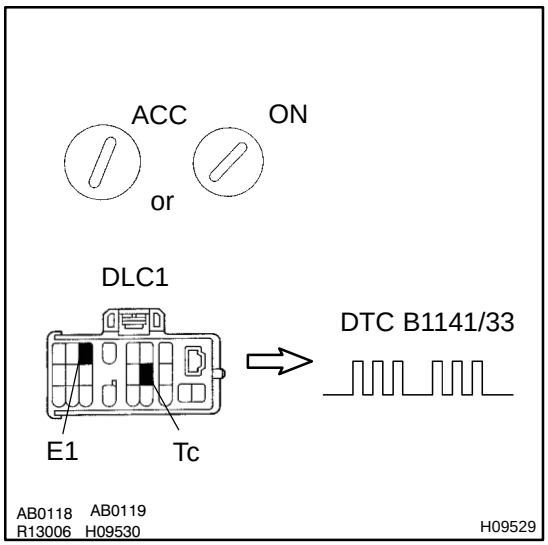

CHECK:

(a) Turn the ignition switch to ACC or ON, and wait at least for 20 seconds.
(b) Clear the DTC stored in memory (See step 5 on page DI-349).
(c) Turn the ignition switch to LOCK, and wait at least for 20 seconds.
(d) Turn the ignition switch to ACC or ON, and wait at least for 20 seconds.
(e) Check the DTC (See page DI-349).

HINT:
Codes other than code B1141/33 may be output at this time, but they are not relevant to this check.

NO → **The malfunctioning part can now be considered normal. To make sure of this, use the simulation method to check.**

YES

2	**Is connector of side airbag sensor assembly (LH) properly connected?**

3	**Prepare for inspection (See step 1 on page DI-475).**

4	Check wire harness.

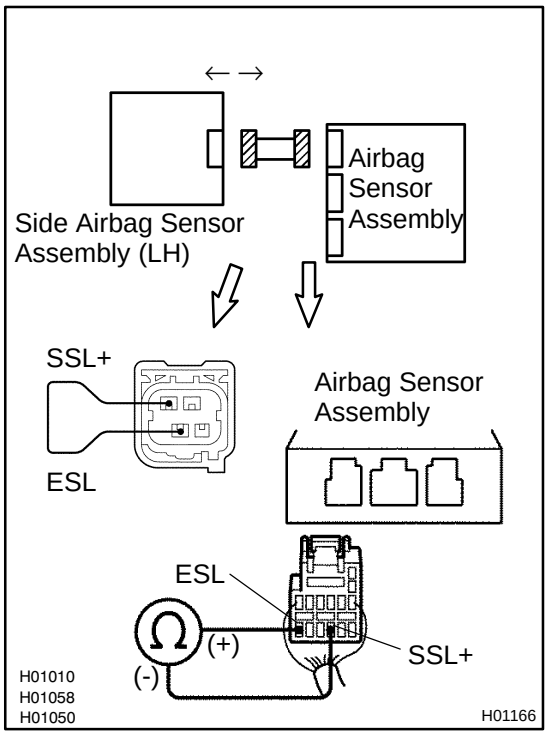

PREPARATION:

(a) Disconnect the side airbag sensor assembly (LH).

(b) Using a service wire, connect SSL+ and ESL of the connector (on the side airbag sensor assembly side) between the side airbag sensor assembly (LH) and the airbag sensor assembly.

CHECK:

For the connector (on the airbag sensor assembly side) between the side airbag sensor assembly (LH) and the airbag sensor assembly, measure the resistance between SSL+ and ESL.

OK:

Resistance: Below 1 Ω

NG → **Repair or replace harness or connector between side airbag sensor assembly (LH) and airbag sensor assembly.**

OK

5	**Check wire harness.**

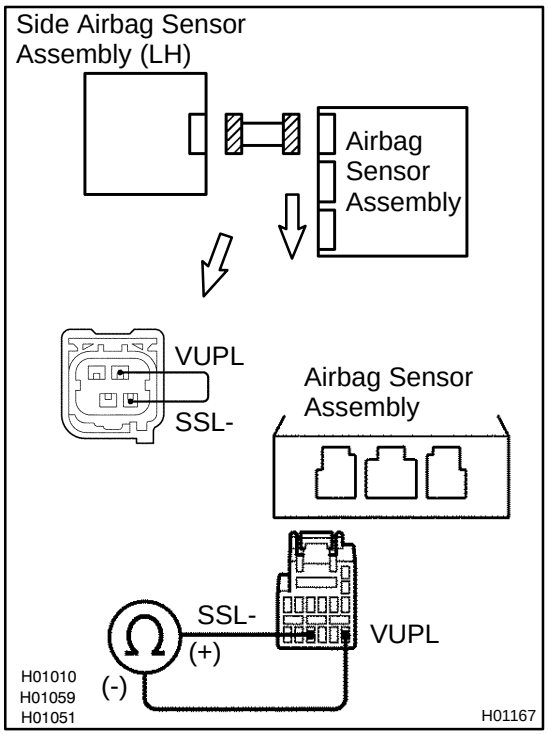

PREPARATION:

Using a service wire, connect VUPL and SSL- of the connector (on the side airbag sensor assembly side) between the side airbag sensor assembly (LH) and the airbag sensor assembly.

CHECK:

For the connector (on the airbag sensor assembly side) between the side airbag sensor assembly (LH) and the airbag sensor assembly, measure the resistance between VUPL and SSL-.

OK:

Resistance: Below 1 Ω

NG → **Repair or replace harness or connector between side airbag sensor assembly (LH) and airbag sensor assembly.**

OK

6	Check wire harness (to ground).

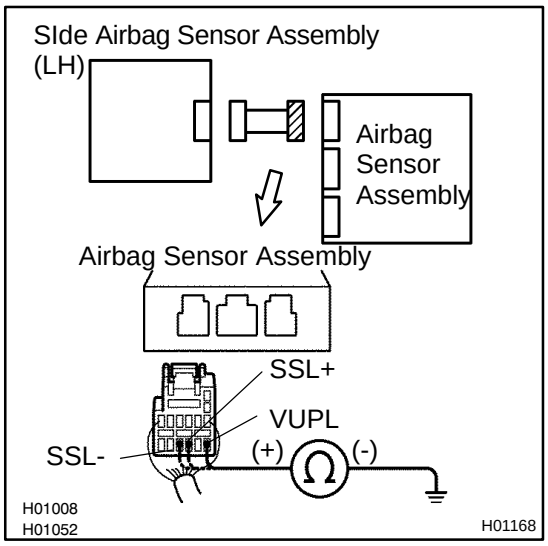

CHECK:

For the connector (on the airbag sensor assembly side) between the side airbag sensor assembly (LH) and the airbag sensor assembly, measure the resistance between body ground and each of SSL+, VUPL and SSL-.

OK:

Resistance: 1 MΩ or Higher

NG → **Repair or replace harness or connector between side airbag sensor assembly (LH) and airbag sensor assembly.**

OK

7	Check wire harness (to B+).

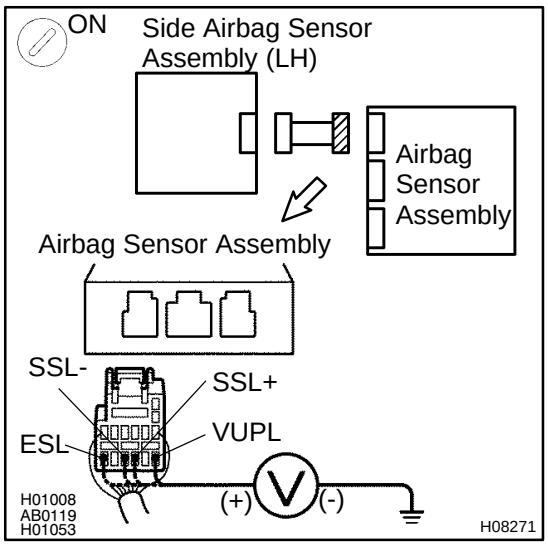

CHECK:

(a) Turn the ignition switch to ON.

(b) For the connector (on the airbag sensor assembly side) between the side airbag sensor assembly (LH) and the airbag sensor assembly, measure the voltage between body ground and each of SSL+, ESL, VUPL and SSL-.

OK:

Voltage: 0 V

NG → **Repair or replace harness or connector between side airbag sensor assembly (LH) and airbag sensor assembly.**

OK

8	Is DTC B1141/33 out put again?

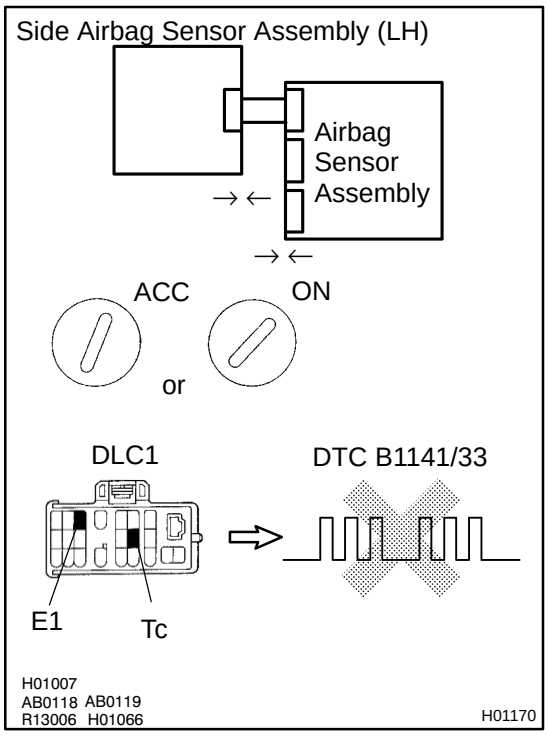

PREPARATION:

(a) Connect the connector to the side airbag sensor assembly (LH).
(b) Connect the connector to the airbag sensor assembly.
(c) Connect negative (-) terminal cable to the battery, and wait at least for 2 seconds.

CHECK:

(a) Turn the ignition switch to ACC or ON, and wait at least for 20 seconds.
(b) Clear the DTC stored in memory
(See step 5 on page DI-349).
(c) Turn the ignition switch to LOCK, and wait at least for 20 seconds.
(d) Turn the ignition switch to ACC or ON, and wait at least for 20 seconds.
(e) Check the DTC (See page DI-349).

HINT:

Codes other than code B1141/33 may be output at this time, but they are not relevant to this check.

YES	Go to step 9.

NO

From the results of the above inspection, the malfunctioning part can now be considered normal. To make sure of this, use the simulation method to check.

9	Check airbag sensor assembly.

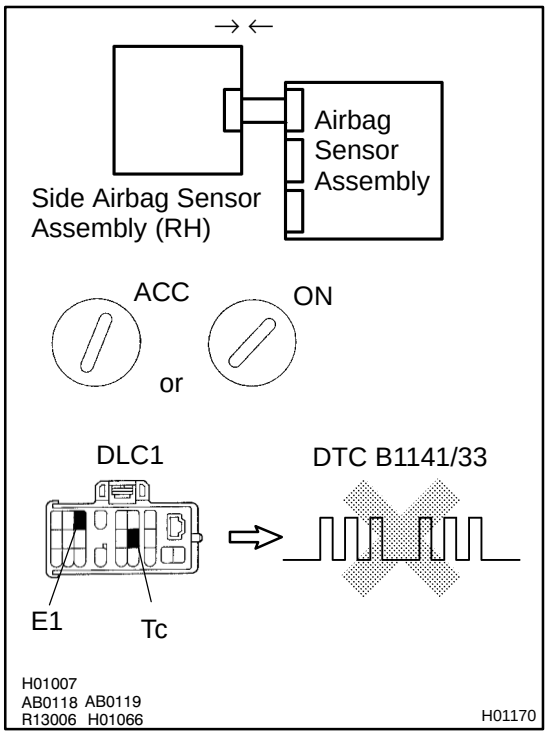

PREPARATION:

(a) Turn the ignition switch to LOCK.
(b) Disconnect negative (-) terminal cable from the battery, and wait at least for 90 seconds.
(c) Disconnect the side airbag sensor (LH) from the connector and connect the side airbag sensor (RH) to the connector.
(d) Connect negative (-) terminal cable to the battery, and wait at least for 2 seconds.

CHECK:

(a) Turn the ignition switch to ACC or ON, and wait at least for 20 seconds.
(b) Clear the DTC stored in memory
(See step 5 on page DI-349).
(c) Turn the ignition switch to LOCK, and wait at least for 20 seconds.
(d) Turn the ignition switch to ACC or ON, and wait at least for 20 seconds.
(e) Check the DTC (See page DI-349).

OK:

DTC B1141/33 is not output.

HINT:
Codes other than code B1141/33 may be output at this time, but they are not relevant to this check.

NG	Replace airbag sensor assembly.

OK

10	Check side airbag sensor assembly (LH).

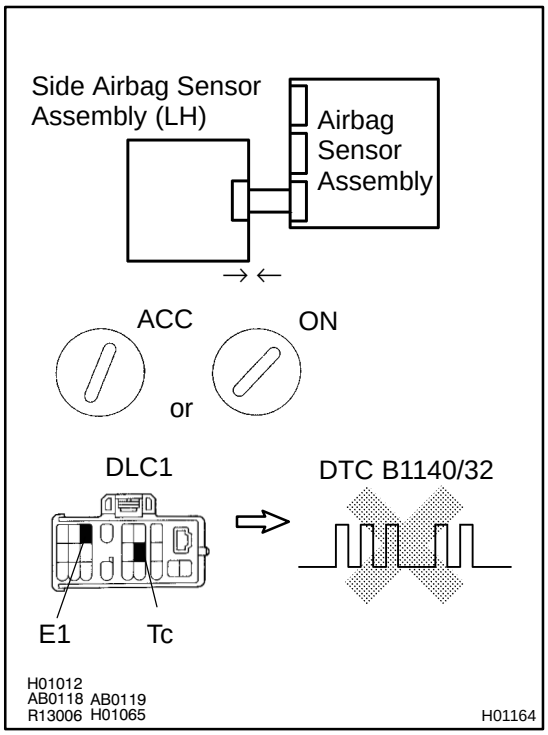

PREPARATION:

(a) Turn the ignition switch to LOCK.
(b) Disconnect negative (-) terminal cable from the battery, and wait at least for 90 seconds.
(c) Connect the side airbag sensor (LH) to the connector that the side airbag sensor (RH) was connected to.
(d) Connect negative (-) terminal cable to the battery, and wait at least for 2 seconds.

CHECK:

(a) Turn the ignition switch to ACC or ON, and wait at least for 20 seconds.
(b) Clear the DTC stored in memory
(See step 5 on page DI-349).
(c) Turn the ignition switch to LOCK, and wait at least for 20 seconds.
(d) Turn the ignition switch to ACC or ON, and wait at least for 20 seconds.
(e) Check the DTC (See page DI-349).

OK:

DTC B1140/32 is not output.

HINT:
Codes other than code B1140/32 may be output at this time, but they are not relevant to this check.

NG → **Replace side airbag sensor assembly (LH).**

OK →

From the results of the above inspection, the malfunctioning part can now be considered normal. To make sure of this, use the simulation method to check.

DI6N2-01

DTC	B1156/B1157/15	Front Airbag Sensor (RH) Malfunction

CIRCUIT DESCRIPTION

The front airbag sensor (RH) circuit consists of the airbag sensor assembly and front airbag sensor (RH). For details of the function of each component, see OPERATION on page RS-3 .
DTC B1156/B1157/15 is recorded when malfunction is detected in the front airbag sensor (RH) circuit.

DTC No.	DTC Detecting Condition	Trouble Area
B1156/B1157/15	●Front airbag sensor (RH) malfunction	●Front airbag sensor (RH) ●Airbag sensor assembly ●Wire harness

WIRING DIAGRAM

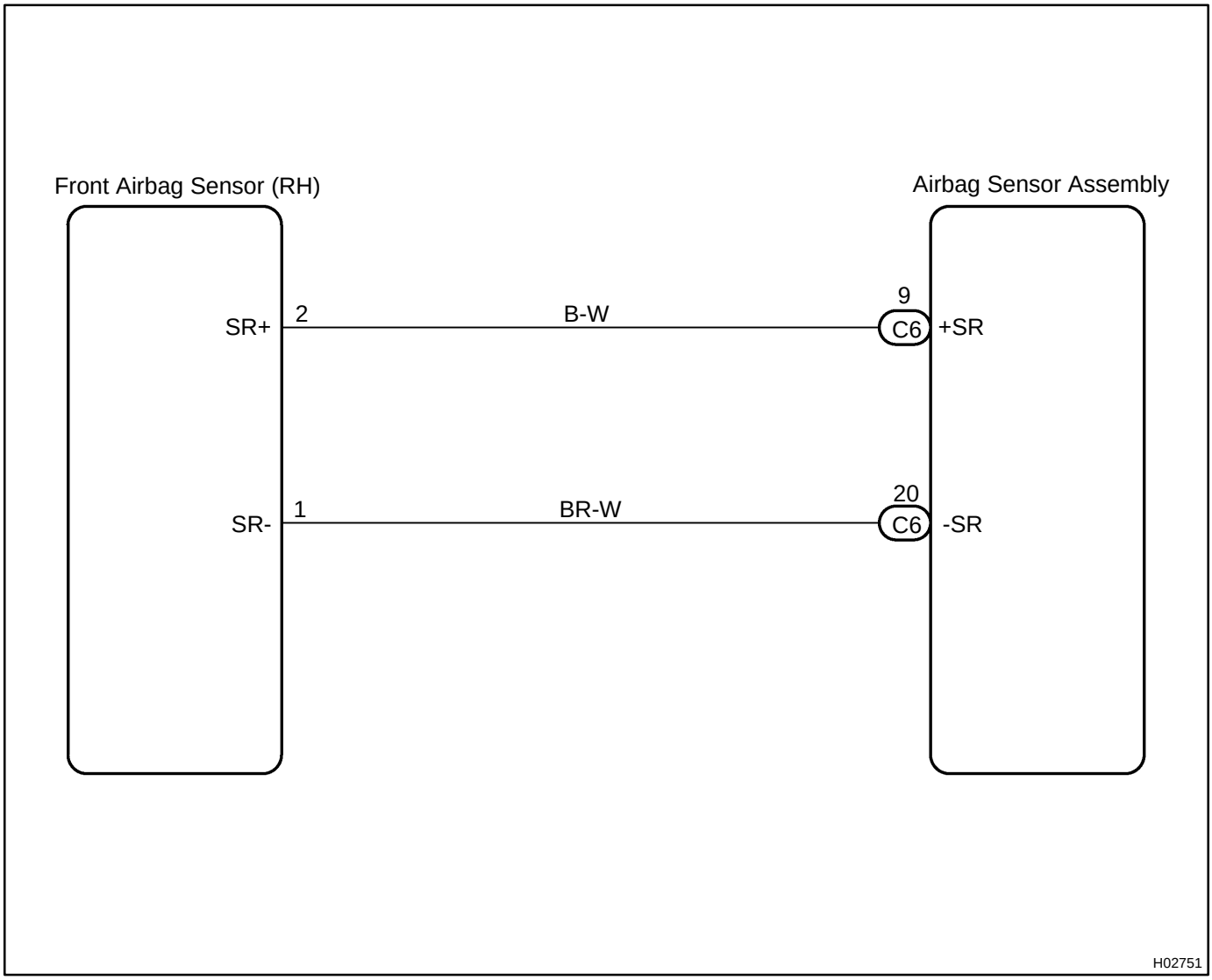

INSPECTION PROCEDURE

1	**Prepare for inspection (See step 1 on page DI-475).**

2	**Check wire harness (to B+).**

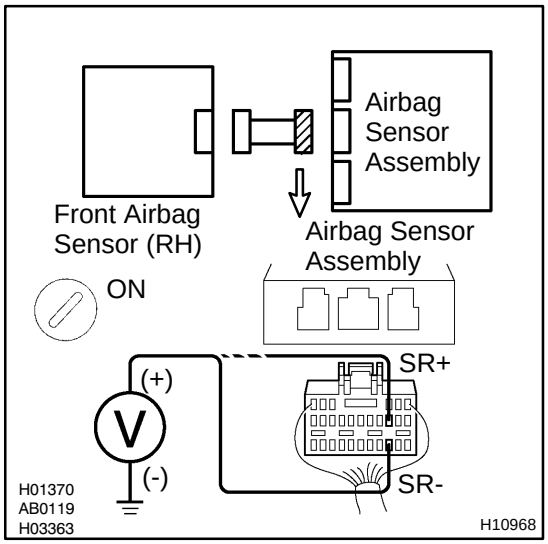

CHECK:

(a) Turn the ignition switch to ON.

(b) For the connector (on the airbag sensor assembly side) between the front airbag sensor (RH) and the airbag sensor assembly, measure the voltage between body ground and each of SR+ and SR-.

OK:

Voltage: Below 1 V

NG → **Repair or replace harness or connector between front airbag sensor (RH) and airbag sensor assembly.**

OK

3	**Check wire harness (to ground).**

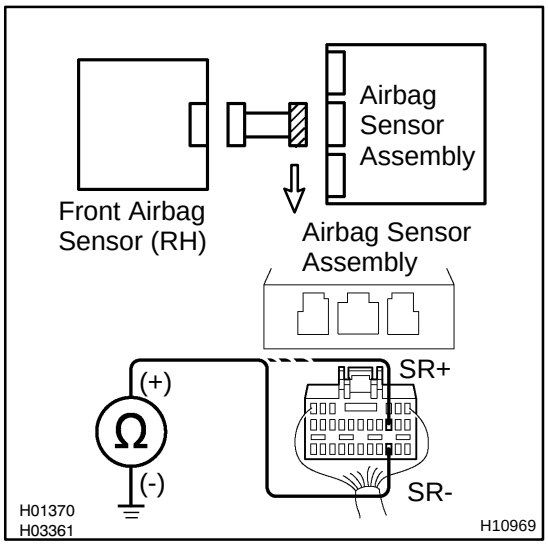

CHECK:

For the connector (on the airbag sensor assembly side) between the front airbag sensor (RH) and the airbag sensor assembly, measure the resistance between body ground and each of SR+ and SR-.

OK:

Resistance: 1 MΩ or Higher

NG → **Repair or replace harness or connector between front airbag sensor (RH) and airbag sensor assembly.**

OK

4	Check wire harness.

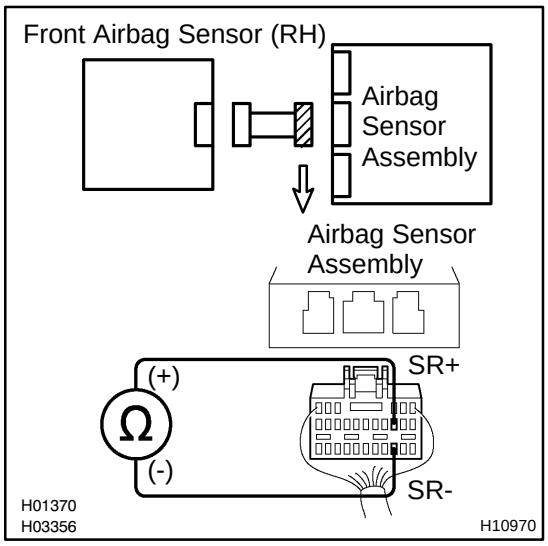

CHECK:

For the connector (on the airbag sensor assembly side) between the front airbag sensor (RH) and the airbag sensor assembly, measure the resistance between SR+ and SR-.

OK:

Resistance: 1 MΩ or Higher

NG → **Repair or replace harness or connector between front airbag sensor (RH) and airbag sensor assembly.**

OK

5	Check wire harness.

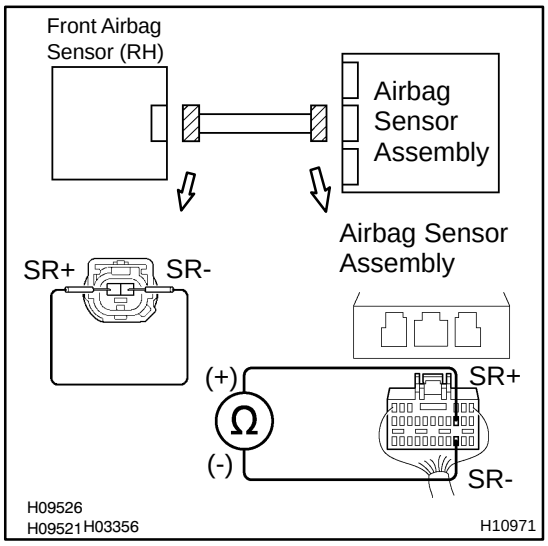

PREPARATION:

Using a service wire, connect SR+ and SR- of the connector (on the front airbag sensor (RH) side) between the airbag sensor assembly and the front airbag sensor (RH).

CHECK:

For the connector (on the airbag sensor assembly side) between the front airbag sensor (RH) and the airbag sensor assembly, measure the resistance between SR+ and SR-.

OK:

Resistance: Below 1 Ω

NG → **Repair or replace harness or connector between front airbag sensor (RH) and airbag sensor assembly.**

OK

6	Check front airbag sensor (RH).

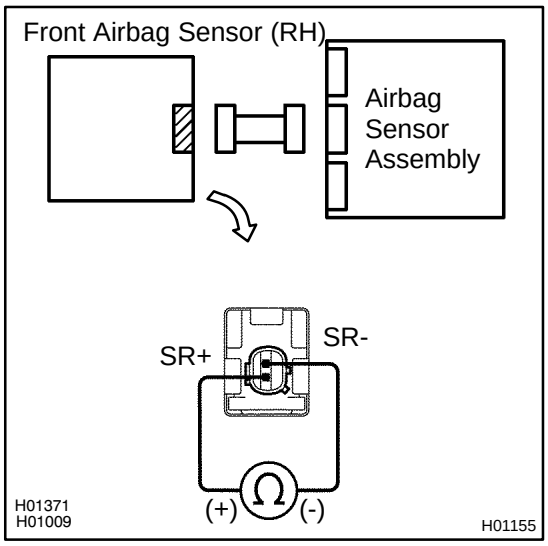

CHECK:.

For the connector (on the front airbag sensor (RH)), measure the resistance between SR+ and SR-.

OK:

Resistance: 300 - 1500 Ω

NG → **Replace front airbag sensor (RH).**

OK

7	Check airbag sensor assembly.

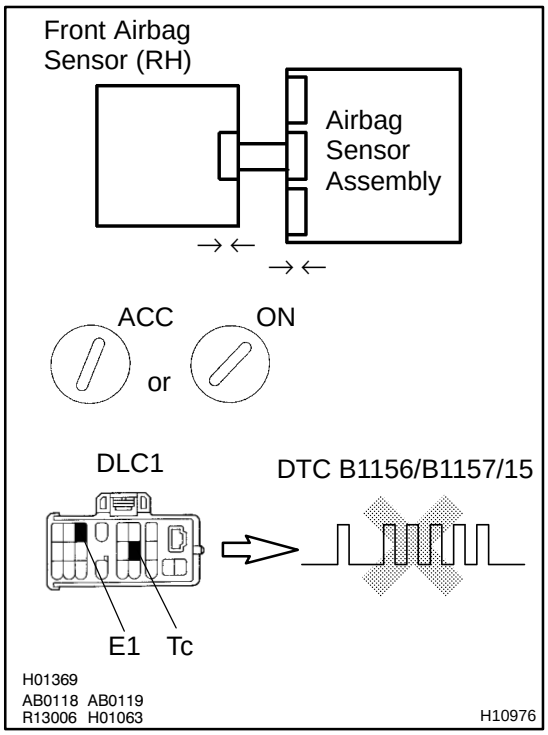

PREPARATION:

(a) Turn the ignition switch to LOCK.
(b) Disconnect negative (-) terminal cable from the battery, and wait at least for 90 seconds.
(c) Connect the front airbag sensor (RH) connector and airbag sensor assembly connector.
(d) Connect negative (-) terminal cable to the battery, and wait at least for 2 seconds.

CHECK:

(a) Turn the ignition switch to ACC or ON, and wait at least for 20 seconds.
(b) Clear the DTC stored in memory (See page DI-349).
(c) Turn the ignition switch to LOCK, and wait at least for 20 seconds.
(d) Turn the ignition switch to ACC or ON, and wait at least for 20 seconds.
(e) Check the DTC (See page DI-349).

OK:

DTC B1156/B1157/15 is not output.

HINT:

Codes other than code B1156/B1157/15 may be output at this time, but they are not relevant to this check.

NG	Replace airbag sensor assembly.

OK

From the results of the above inspection, the malfunctioning part can now be considered normal. To make sure of this, use the simulation method to check.

DI6N3-01

DTC	B1158/B1159/16	Front Airbag Sensor (LH) Malfunction

CIRCUIT DESCRIPTION

The front airbag sensor (LH) circuit consists of the airbag sensor assembly and front airbag sensor (LH).
For details of the function of each component, see OPERATION on page RS-3 .
DTC B1158/B1159/16 is recorded when malfunction is detected in the front airbag sensor (LH) circuit.

DTC No.	DTC Detecting Condition	Trouble Area
B1158/B1159/16	●Front airbag sensor (LH) malfunction	●Front airbag sensor (LH) ●Wire harness ●Airbag sensor assembly ●Engine room main wire harness

WIRING DIAGRAM

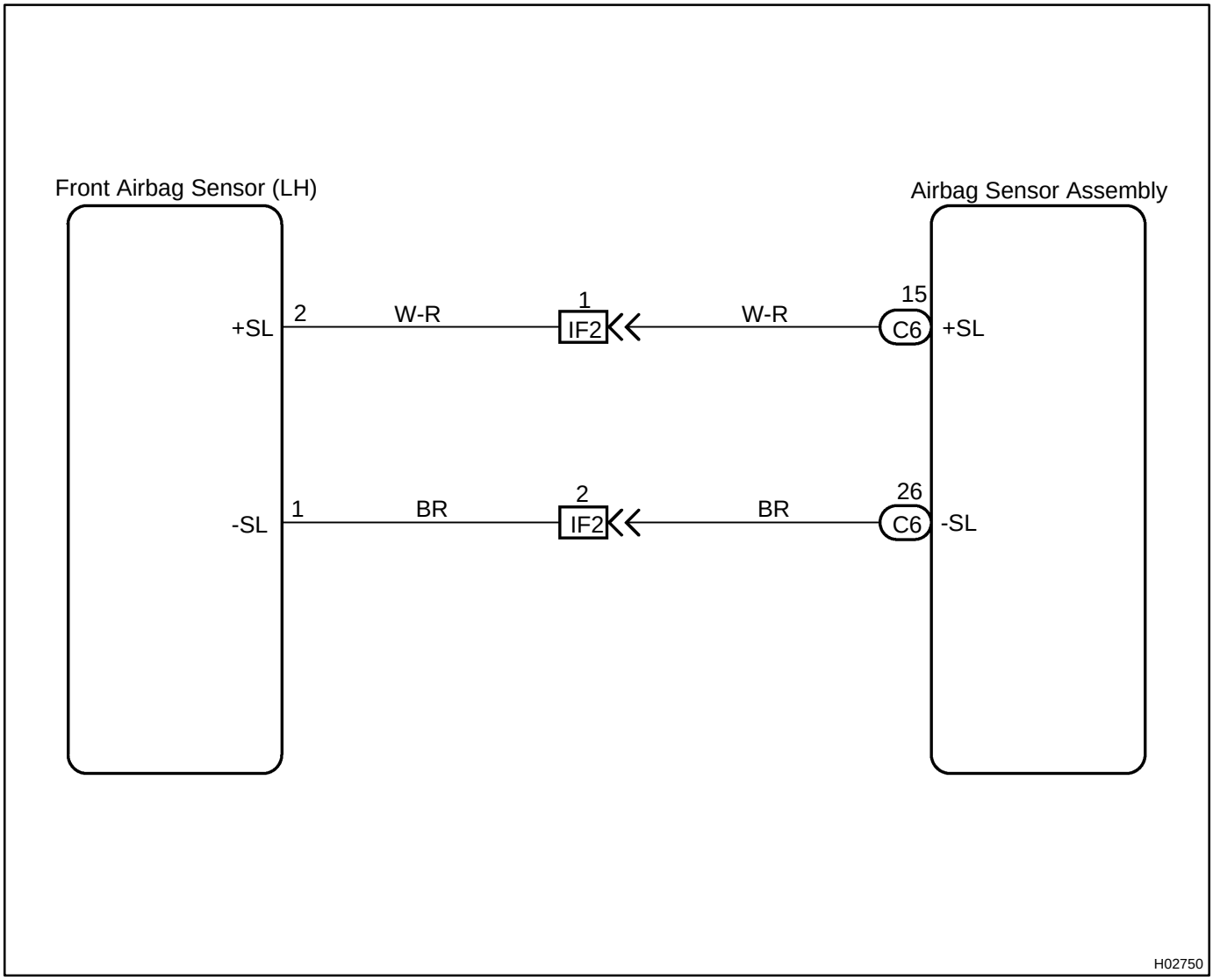

INSPECTION PROCEDURE

1	**Prepare for inspection (See step 1 on page DI-475).**

2	**Check wire harness (to B+).**

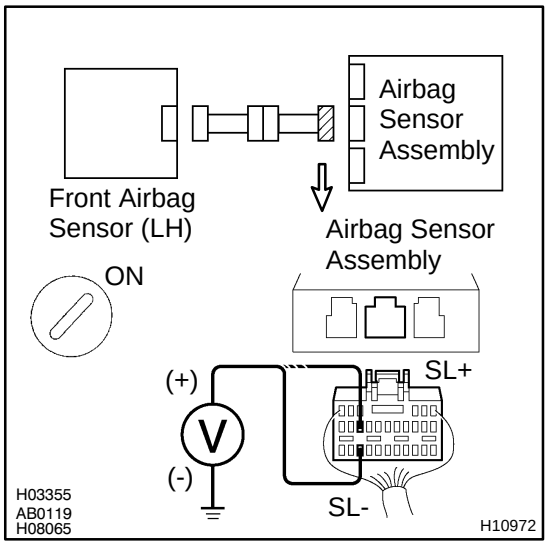

CHECK:

(a) Turn the ignition switch to ON.

(b) For the connector (on the airbag sensor assembly side) between the front airbag sensor (LH) and the airbag sensor assembly, measure the voltage between body ground and each of SL+ and SL-.

OK:

Voltage: Below 1 V

NG → **Go to step 8.**

OK

3	**Check wire harness (to ground).**

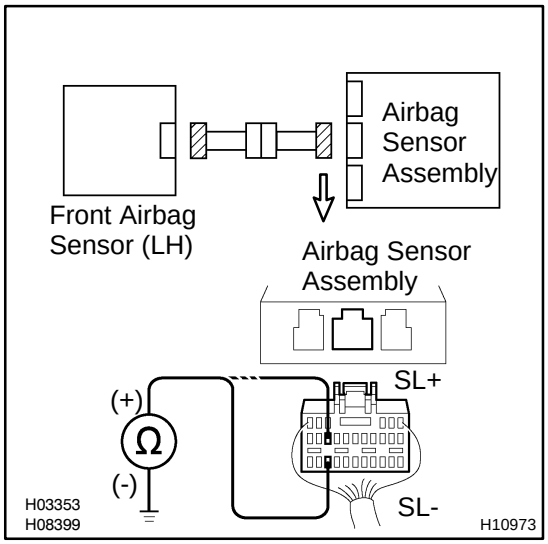

CHECK:

For the connector (on the airbag sensor assembly side) between the front airbag sensor (LH) and the airbag sensor assembly, measure the resistance between body ground and each of SL+ and SL-.

OK:

Resistance: 1 MΩ or Higher

NG → **Go to step 9.**

OK

4	Check wire harness.

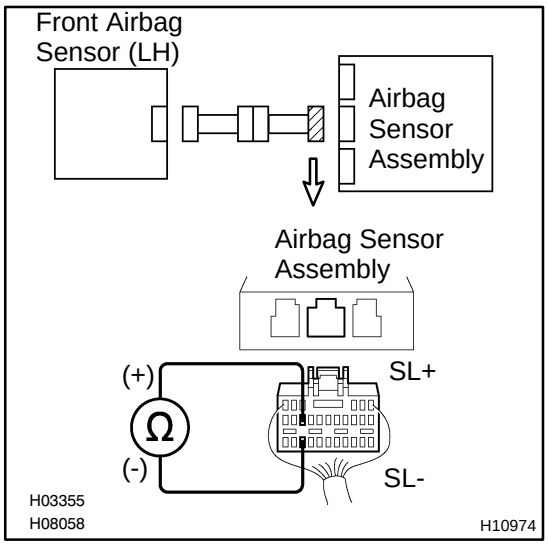

CHECK:

For the connector (on the airbag sensor assembly side) between the front airbag sensor (LH) and the airbag sensor assembly, measure the resistance between SL+ and SL-.

OK:

Resistance: 1 MΩ or Higher

NG → **Go to step 10.**

OK

5	Check wire harness.

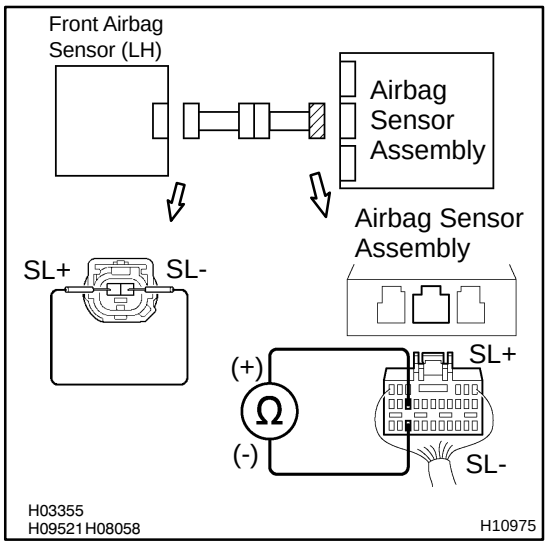

PREPARATION:

Using a service wire, connect SL+ and SL- of the connector (on the front airbag sensor (LH) side) between the airbag sensor assembly and the front airbag sensor (LH).

CHECK:

For the connector (on the airbag sensor assembly side) between the front airbag sensor (LH) and the airbag sensor assembly, measure the resistance between SL+ and SL-.

OK:

Resistance: Below 1 Ω

NG → **Go to step 11.**

OK

6	Check front airbag sensor (LH).

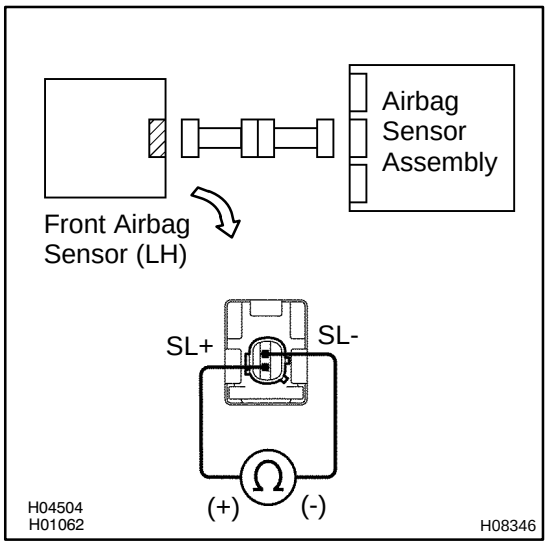

CHECK:

For the connector (on the front airbag sensor (LH)), measure the resistance between SL+ and SL-.

OK:

Resistance: 300 - 1500 Ω

NG → **Replace front airbag sensor (LH).**

OK

7	Check airbag sensor assembly.

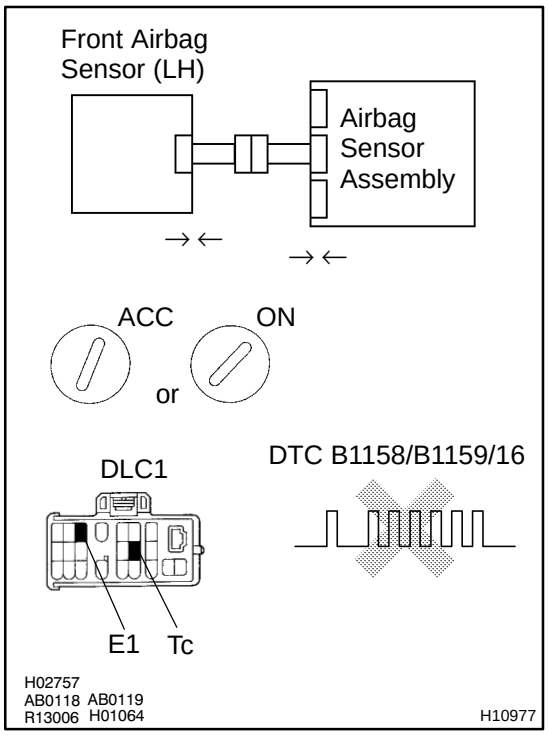

PREPARATION:

(a) Turn the ignition switch to LOCK.
(b) Disconnect negative (-) terminal cable from the battery, and wait at least for 90 seconds.
(c) Connect the front airbag sensor (LH) connector and airbag sensor assembly connector.
(d) Connect negative (-) terminal cable to the battery, and wait at least for 2 seconds.

CHECK:

(a) Turn the ignition switch to ACC or ON, and wait at least for 20 seconds.
(b) Clear the DTC stored in memory (See page DI-349).
(c) Turn the ignition switch to LOCK, and wait at least for 20 seconds.
(d) Turn the ignition switch to ACC or ON, and wait at least for 20 seconds.
(e) Check the DTC (See page DI-349).

OK:

DTC B1158/B1159/16 is not output.

HINT:

Codes other than code B1158/B1159/16 may be output at this time, but they are not relevant to this check.

NG	Replace airbag sensor assembly.

OK

From the results of the above inspection, the malfunctioning part can now be considered normal. To make sure of this, use the simulation method to check.

8	Check engine room main wire harness (to B+).

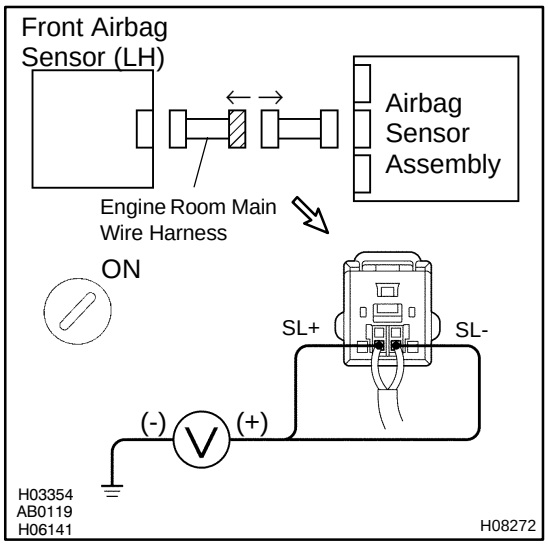

PREPARATION:

Disconnect the engine room main wire harness connector on the airbag sensor assembly side.

CHECK:

(a) Turn the ignition switch to ON.

(b) For the connector (on the LH front door wire harness side) between the airbag sensor assembly and the engine room main wire harness, measure the voltage between body ground and each of SL+ and SL-.

OK:

Voltage: Below 1 V

NG → **Repair or replace engine room main wire harness.**

OK

Repair or replace harness or connector between airbag sensor assembly and engine room main wire harness.

9	Check engine room main wire harness (to ground).

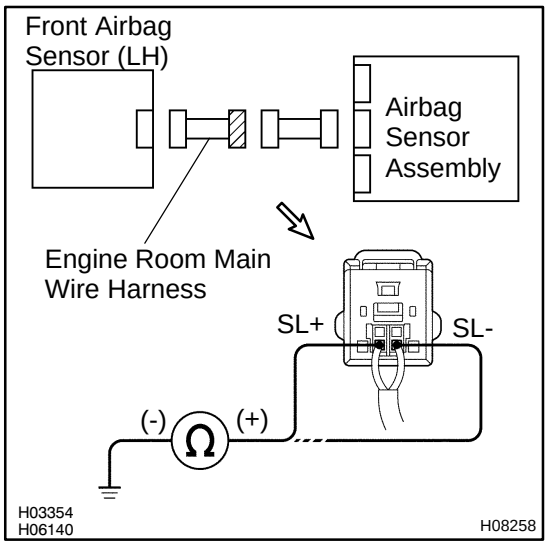

PREPARATION:

Disconnect the engine room main wire harness connector on the airbag sensor assembly side.

CHECK:

For the connector (on the engine room main wire harness side) between the airbag sensor assembly and the engine room main wire harness, measure the resistance between body ground and each of SL+ and SL-.

OK:

Resistance: 1 MΩ or Higher

NG → **Repair or replace engine room main wire harness.**

OK

Repair or replace harness or connector between airbag sensor assembly and engine room main wire harness.

10	Check engine room main wire harness.

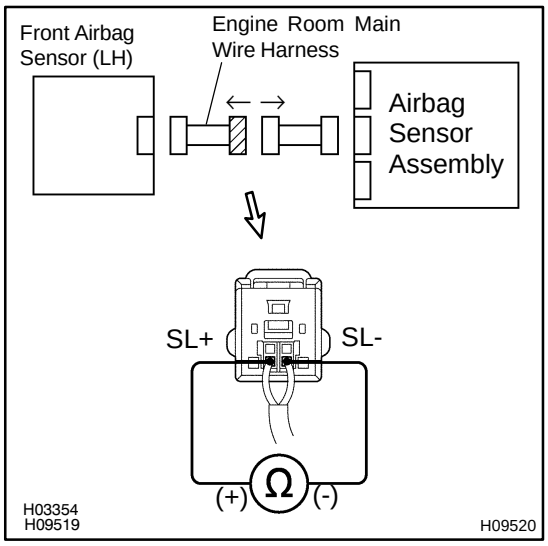

PREPARATION:

Disconnect the engine room main wire harness connector on the airbag sensor assembly side.

CHECK:

For the connector (on the engine room main wire harness side) between the airbag sensor assembly and the engine room main wire harness, measure the resistance between SL+ and SL-.

OK:

Resistance: 1 MΩ or Higher

NG → **Repair or replace engine room main wire harness.**

OK

Repair or replace harness or connector between airbag sensor assembly and engine room main wire harness.

11	Check engine room main wire harness.

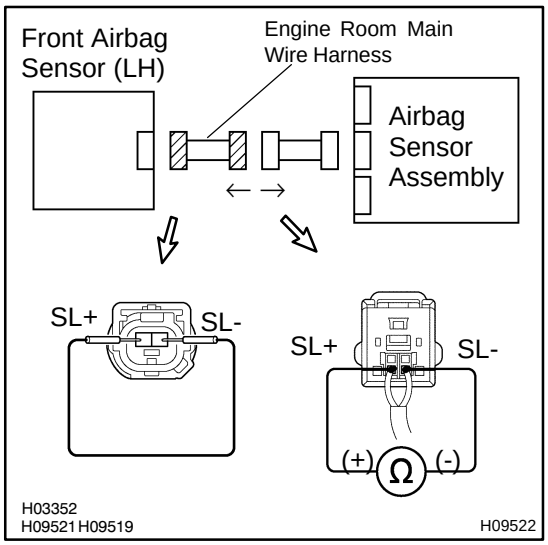

PREPARATION:

(a) Disconnect the engine room main wire harness connector on the airbag sensor assembly side.

(b) Using a service wire, connect SL+ and SL- of the connector (on the engine room main wire harness side) between the engine room main wire harness and the front airbag sensor (LH).

CHECK:

For the connector (on the engine room main wire harness side) between the airbag sensor assembly and the engine room main wire harness, measure the resistance between SL+ and SL-.

OK:

Resistance: Below 1 Ω

NG → **Repair or replace engine room main wire harness.**

OK

Repair or replace harness or connector between airbag sensor assembly and engine room main wire harness.

DI1NV-16

DTC	Normal	Source Voltage Drop

CIRCUIT DESCRIPTION

The SRS is equipped with a voltage-increase circuit (DC-DC converter) in the airbag sensor assembly in case the source voltage drops.
When the battery voltage drops, the voltage-increase circuit (DC-DC converter) functions to increase the voltage of the SRS to normal voltage.
The diagnosis system malfunction display for this circuit is different from other circuits that is when the SRS warning light remains lit up and the DTC is a normal code, source voltage drop is indicated.
Malfunction in this circuit is not recorded in the airbag sensor assembly, and the source voltage returns to normal, the SRS warning light automatically goes off.

DTC No.	Diagnosis
(Normal)	Source voltage drop

WIRING DIAGRAM

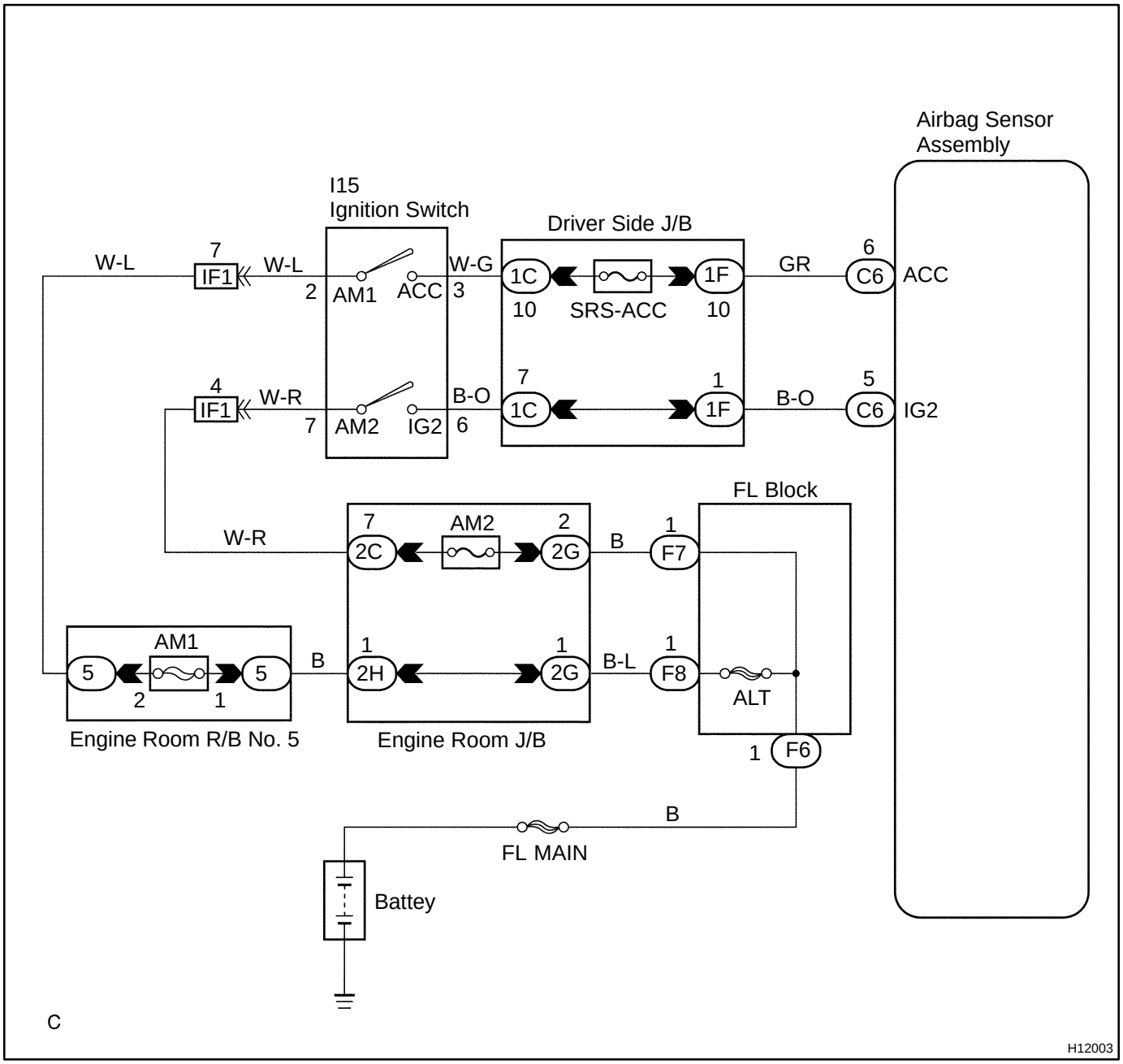

INSPECTION PROCEDURE

1	**Prepare for inspection.**

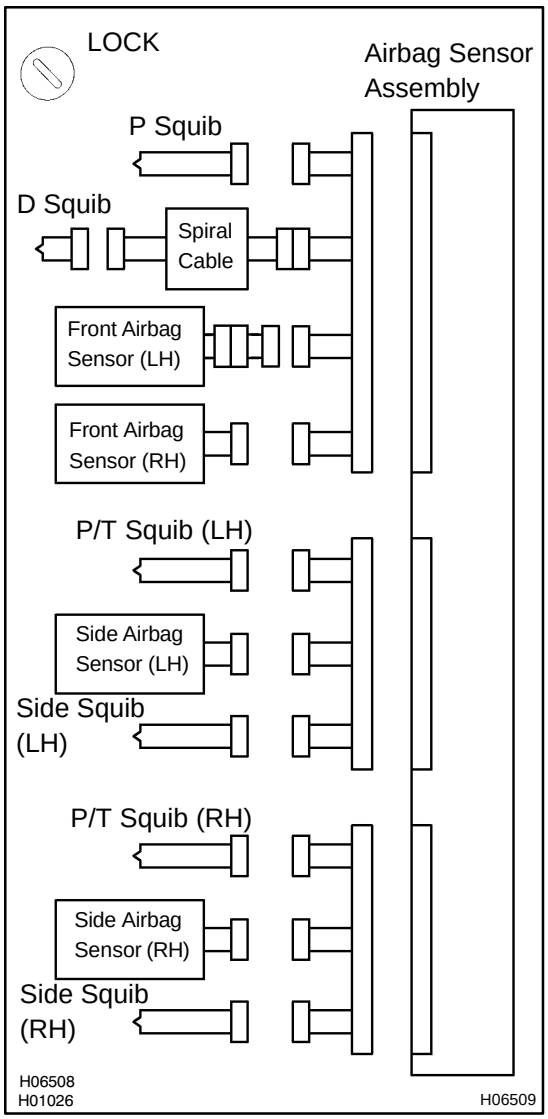

PREPARATION:

(a) Disconnect negative (-) terminal cable from the battery, and wait at least for 90 seconds.

(b) Remove the steering wheel pad (See page SR-12).

(c) Disconnect the connector of the front passenger airbag assembly (See page RS-28).

(d) Disconnect the connector of the side airbag assembly RH and LH (See page RS-42 and RS-56).

(e) Disconnect the connector of the seat belt pretensioner RH and LH (See page BO-128).

(f) Disconnect the connectors of the airbag sensor assembly (See page RS-63 and RS-68).

(g) Disconnect the connector of the front airbag sensor RH and LH (See page RS-73).

(h) Disconnect the connector of the side airbag sensor assembly RH and LH (See page RS-78).

CAUTION:

Store the steering wheel pad, front passenger airbag assembly and side airbag assemlby with the front surface facing upward.

2	Check source voltage.

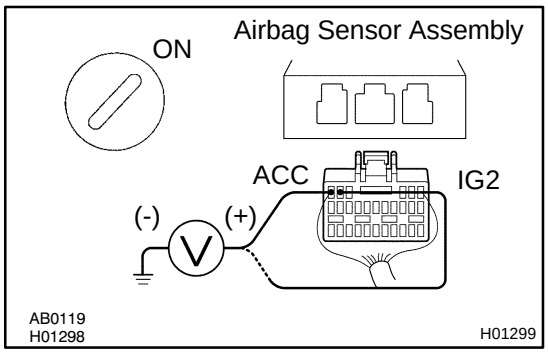

PREPARATION:

Connect negative (-) terminal cable to the battery.

CHECK:

(a) Turn ignition switch ON.

(b) Measure the voltage between body ground and each of IG2 and ACC on the sensor and operate electric system (defogger, wiper, headlight, heater blower, etc.).

OK:

Voltage: 10 - 14 V

NG → **Check harness between battery and airbag sensor assembly, and check battery and charging system.**

OK

3	Does SRS warning light turn off?

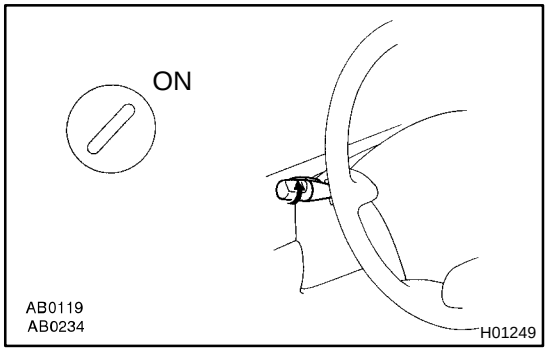

PREPARATION:

(a) Turn the ignition switch to LOCK.

(b) Connect the steering wheel pad connector.

(c) Connect the front passenger airbag assembly connector.

(d) Connect the side airbag assembly connectors.

(e) Connect the seat belt pretensioner connectors.

(f) Connect the airbag sensor assembly connectors.

(g) Connect the front airbag sensor connectors.

(h) Connect the side airbag sensor assembly connectors.

(i) Turn the ignition switch to ON.

CHECK:

Operate electric system (defogger, wiper, headlight, heater blower, etc.) and check that SRS warning light goes off.

NO → **Check for DTCs. If a DTC is output, perform troubleshooting for the DTC. If a normal code is output, replace airbag sensor assembly.**

YES

From the results of the above inspection, the malfunctioning part can now be considered normal. To make sure of this, use the simulation method to check.

DI5RJ-04

SRS Warning Light Circuit Malfunction

CIRCUIT DESCRIPTION

The SRS warning light is located on the combination meter.
When the SRS is normal, the SRS warning light lights up for approx. 6 seconds after the ignition switch is turned from the LOCK position to ACC or ON position, and then turns off automatically.
If there is a malfunction in the SRS, the SRS warning light lights up to inform the driver of the abnormality.
When terminals Tc and E1 of the DLC1 are connected, the DTC is displayed by blinking the SRS warning light.

WIRING DIAGRAM

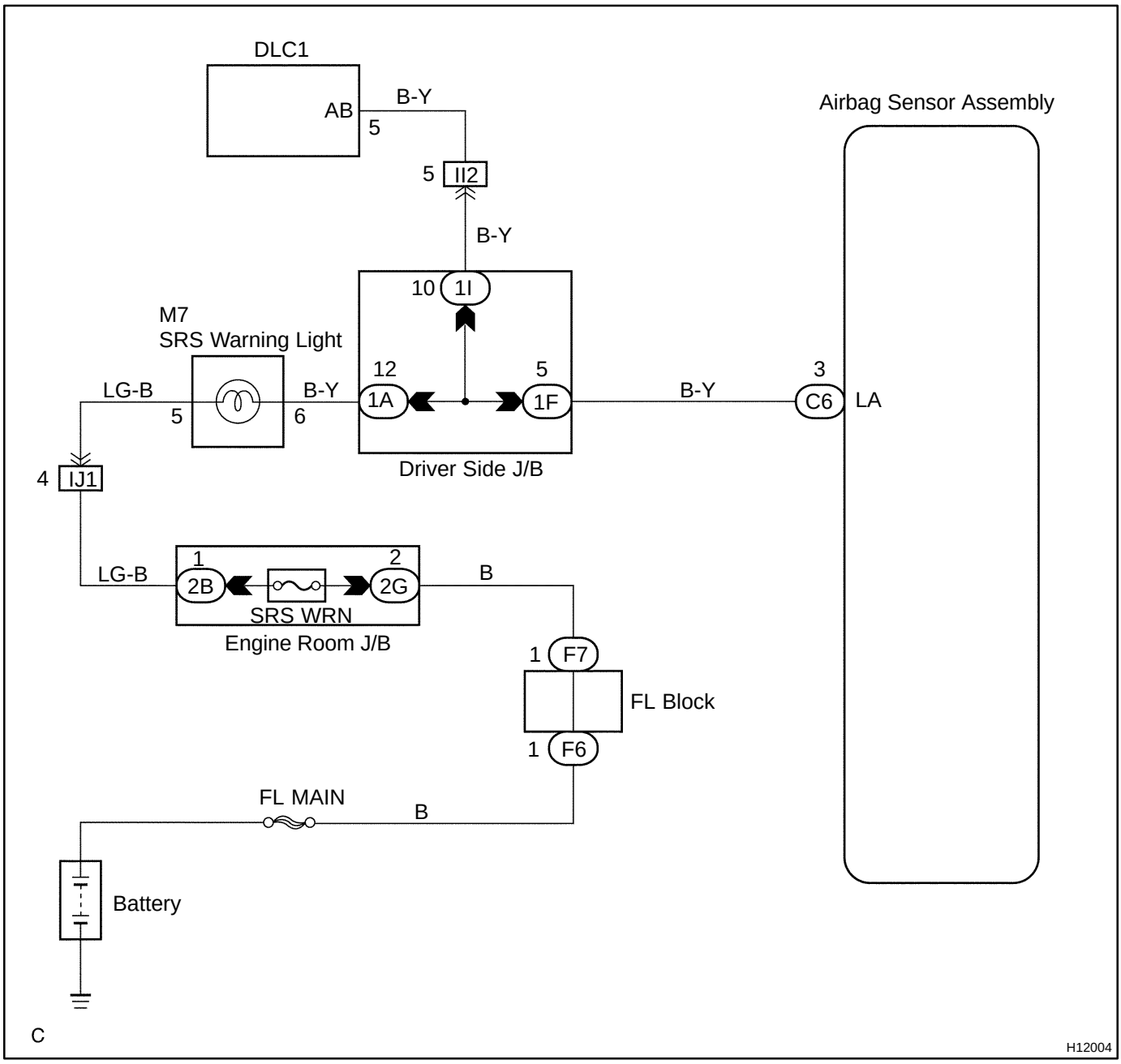

INSPECTION PROCEDURE

Always lights up, when ignition switch is in LOCK position

1	**Prepare for inspection (See step 1 on page DI-475).**

2	**Does SRS warning light turn off?**

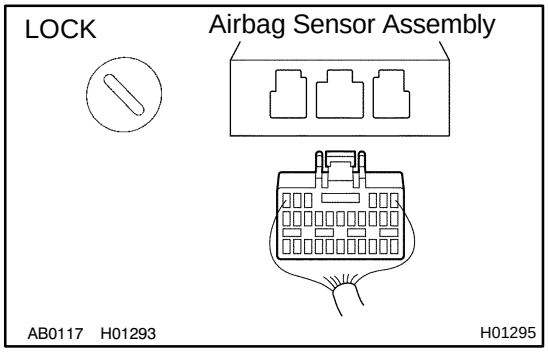

PREPARATION:

(a) Turn the ignition switch to LOCK.
(b) Disconnect negative (-) terminal cable from the battery, and wait at least for 90 seconds.
(c) Disconnect the airbag sensor assembly connector.
(d) Connect negative (-) terminal cable to the battery.

CHECK:

Check operation of SRS warning light.

NO → **Check SRS warning light circuit or terminal AB circuit of DLC1.**

YES

Replace airbag sensor assembly.

Does not light up, when ignition switch is turned to ACC or ON

1	**Check ECU-B Fuse.**

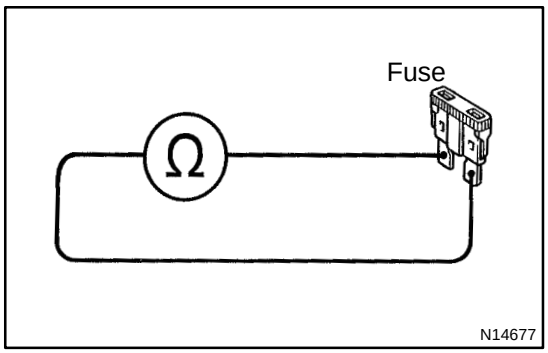

PREPARATION:
Remove the ECU-B fuse.
CHECK:
Check continuity of the ECU-B fuse.
OK:
Continuity
HINT:
- Fuse may be burnt out even if it appears to be OK during visual inspection.
- If fuse is OK, install it.

NG → **Go to step 5.**

OK

2	**Prepare for inspection (See step 1 on page DI-475).**

3	**Check SRS warning light circuit.**

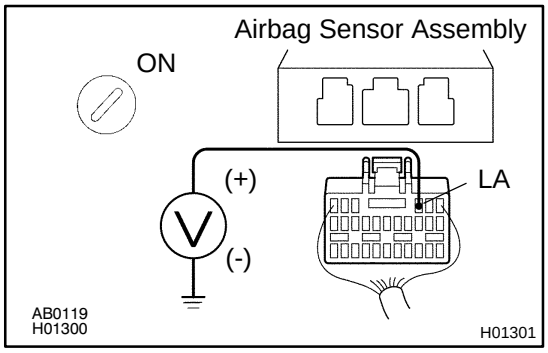

PREPARATION:
(a) Connect negative (-) terminal cable to the battery.
(b) Turn the ignition switch to ACC or ON.
CHECK:
Measure the voltage between body ground and LA terminal of the harness side connector of the airbag sensor assembly.
OK:
Voltage: 10 - 14 V

NG → **Check SRS warning light bulb or repair SRS warning light circuit.**

OK

4	Does SRS warning light come on?

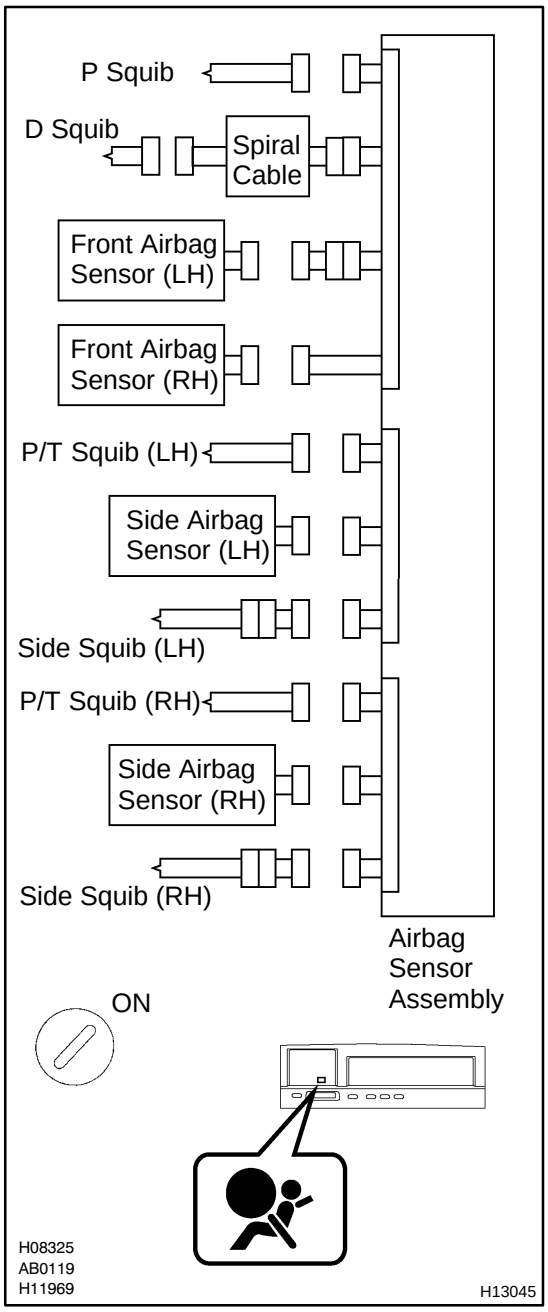

PREPARATION:

(a) Disconnect negative (-) terminal cable from the battery.
(b) Connect the airbag sensor assembly connector.
(c) Connect negative (-) terminal cable to the battery, and wait at least for 2 seconds.
(d) Turn the ignition switch to ACC or ON.

CHECK:

Check operation of the SRS warning light.

NO

Check terminal LA of airbag sensor assembly. If normal, replace airbag sensor assembly.

YES

From the results of the above inspection, the malfunctioning part can now be considered normal. To make sure of this, use simulation method to check.

5	**Is new ECU-B fuse burnt out again?**

NO → **Using simulation method, reproduce malfunction symptoms (See page IN-20).**

YES

Check harness between ECU- B fuse and SRS warning light.

DI1BQ-18

Tc Terminal Circuit

CIRCUIT DESCRIPTION

By connecting terminals Tc and E1 of the DLC1 the airbag sensor assembly is set in the DTC output mode. The DTCs are displayed by blinking the SRS warning light.

WIRING DIAGRAM

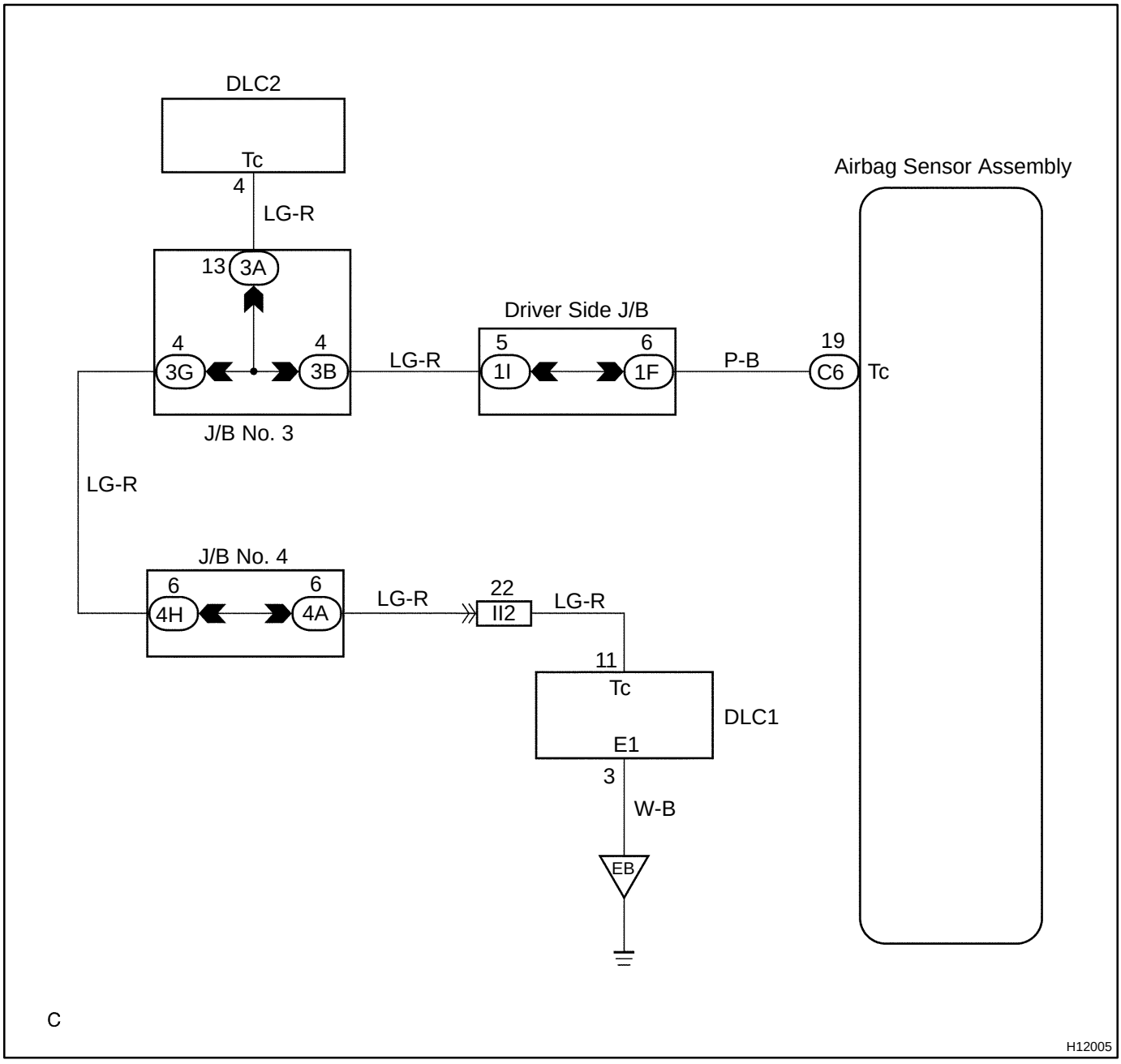

INSPECTION PROCEDURE

If the DTC is not displayed, do the following troubleshooting.

1	**Does SRS warning light light up for approx. 6 seconds?**

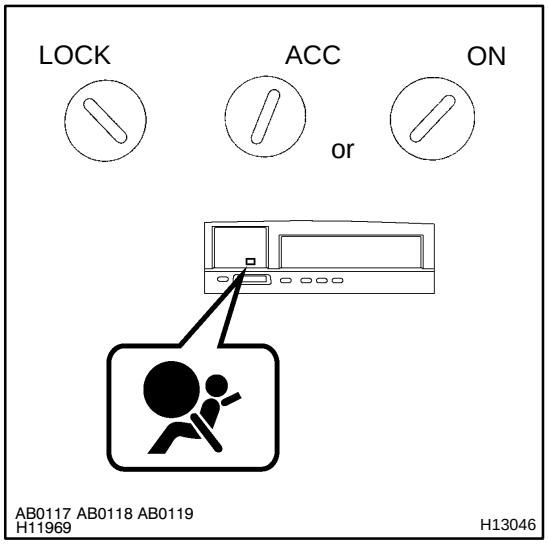

PREPARATION:

Check operation of the SRS warning light after ignition switch is turned from LOCK position to ACC or ON position.

NO → **Check SRS warning light system (See page DI-479).**

YES

2	**Check voltage between terminals Tc and E1 of DLC1.**

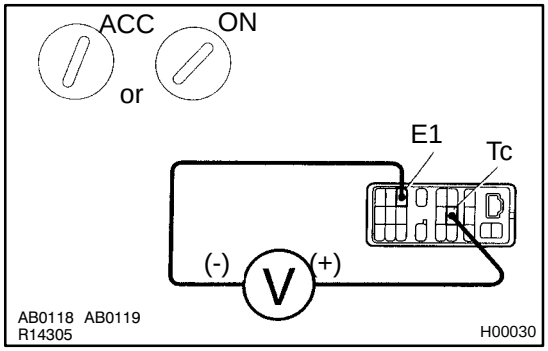

PREPARATION:

Turn the ignition switch to ACC or ON.

CHECK:

Measure the voltage between terminals Tc and E1 of DLC1.

OK:

Voltage: 10 - 14 V

OK → **Go to step 4.**

NG

3	Check voltage between terminal Tc of DLC1 and body ground.

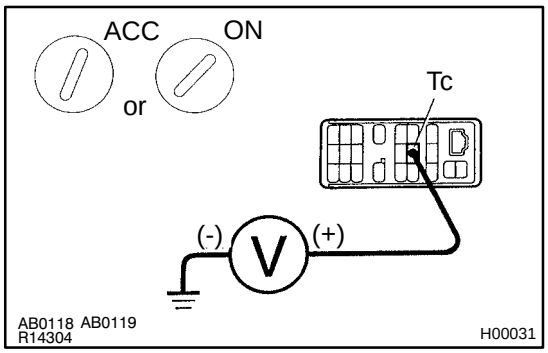

CHECK:

Measure the voltage between terminal Tc of DLC1 and body ground.

OK:

Voltage: 10 - 14 V

OK	Check harness between terminal E1 of DLC1 and body ground.

NG

4	Check airbag sensor assembly.

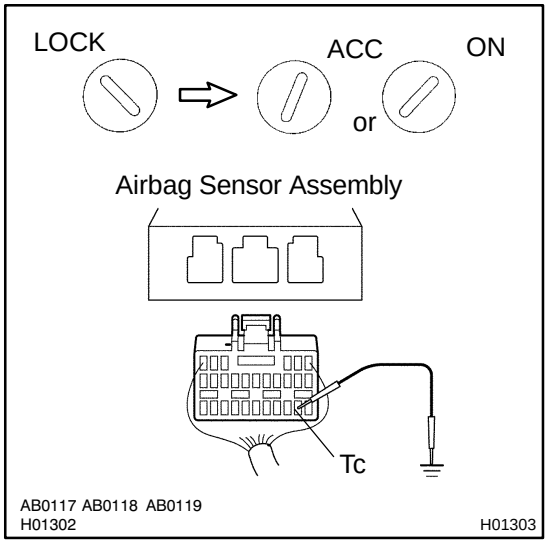

PREPARATION:

(a) Turn the ignition switch to LOCK.
(b) Disconnect negative (-) terminal cable from the battery, and wait at least for 90 seconds.
(c) Disconnect the airbag sensor assembly connector.
(d) Insert service wire into terminal Tc from back side as shown in the illustration.
(e) Connect the airbag sensor assembly connector with service wire.
(f) Connect negative (-) terminal cable to the battery.
(g) Turn the ignition switch to ACC or ON and wait at least for 20 seconds.
(h) Connect service wire of terminal Tc to body ground.

CHECK:

Check operation of the SRS warning light.

OK:

SRS waning light comes on.

NOTICE:

Pay due attention to the terminal connecting position to avoid a malfunction.

OK	Check harness between the airbag sensor assembly and DLC1.

NG

Replace airbag sensor assembly.

If the DTC is displayed without a DTC check procedure, perform the following troubleshooting.

1	**Check resistance between terminal Tc of airbag sensor assembly and body ground.**

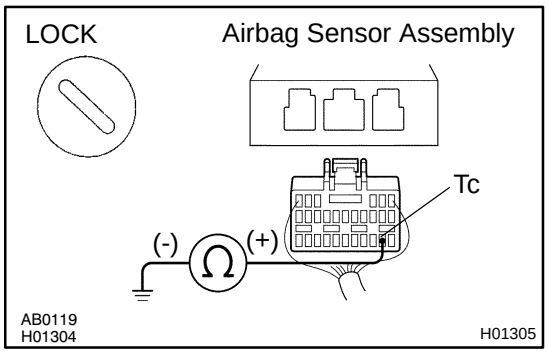

PREPARATION:

(a) Turn the ignition switch to LOCK.

(b) Disconnect negative (-) terminal cable from the battery, and wait at least for 90 seconds.

(c) Disconnect the airbag sensor assembly connector.

CHECK:

Check resistance between terminal Tc of the airbag sensor assembly connector and body ground.

OK:

Resistance: 1 MΩ or Higher

NG → **Repair or replace harness or connector.**

OK

Replace airbag sensor assembly.

DI15Z-10

CUSTOMER PROBLEM ANALYSIS CHECK

Supplemental Restraint System Check Sheet

Inspector's Name _____

Customer's Name		**Registration No.**	
		Registration Year	/ /
		Frame No.	
Date Vehicle Brought In	/ /	**Odometer Reading**	**km Miles**

Date Problem Occurred	/ /
Weather	☐ Fine ☐ Cloudy ☐ Rainy ☐ Snowy ☐ Other
Temperature	**Approx.**

Vehicle Operation	☐ Starting ☐ Idling ☐ Driving [☐ Constant speed ☐ Acceleration ☐ Deceleration ☐ Other]
Road Conditions	
Details Of Problem	

Vehicle Inspection and Repair History Prior to Occurrence of Malfunction (Including Supplemental Restraint System)	

Diagnosis System Inspection

SRS Warning Light Inspection	**1st Time**	☐ Remains ON ☐ Sometimes Lights Up ☐ Does Not Light Up
	2nd Time	☐ Remains ON ☐ Sometimes Lights Up ☐ Does Not Light Up
DTC Inspection	**1st Time**	☐ Normal Code ☐ Malfunction Code [Code.]
	2nd Time	☐ Normal Code ☐ Malfunction Code [Code.]

DI161-31

DIAGNOSTIC TROUBLE CODE CHART

If a malfunction code is displayed during the DTC check, check the circuit listed for that code in the table below (Proceed to the page given for that circuit.).

DTC No. (See Page)	Detection Item	Trouble Area	SRS Warning Light
B0100/13 (DI-362)	●Short in D squib circuit	●Steering wheel pad (squib) ●Spiral cable ●Airbag sensor assembly ●Wire harness	ON
B0101/14 (DI-367)	●Open in D squib circuit	●Steering wheel pad (squib) ●Spiral cable ●Airbag sensor assembly ●Wire harness	ON
B0102/11 (DI-371)	●Short in D squib circuit (to ground)	●Steering wheel pad (squib) ●Spiral cable ●Airbag sensor assembly ●Wire harness	ON
B0103/12 (DI-375)	●Short in D squib circuit (to B+)	●Steering wheel pad (squib) ●Spiral cable ●Airbag sensor assembly ●Wire harness	ON
B0105/53 (DI-379)	●Short in P squib circuit	●Front passenger airbag assembly (squib) ●Airbag sensor assembly ●Wire harness	ON
B0106/54 (DI-383)	●Open in P squib circuit	●Front passenger airbag assembly (squib) ●Airbag sensor assembly ●Wire harness	ON
B0107/51 (DI-386)	●Short in P squib circuit (to ground)	●Front passenger airbag assembly (squib) ●Airbag sensor assembly ●Wire harness	ON
B0108/52 (DI-389)	●Short in P squib circuit (to B+)	●Front passenger airbag assembly (squib) ●Airbag sensor assembly ●Wire harness	ON
B0110/43 (DI-392)	●Short in side squib (RH) circuit	●Side airbag assembly RH (squib) ●Airbag sensor assembly ●Wire harness	Blink
B0111/44 (DI-396)	●Open in side squib (RH) circuit	●Side airbag assembly RH (squib) ●Airbag sensor assembly ●Wire harness	Blink
B0112/41 (DI-402)	●Short in side squib (RH) circuit (to ground)	●Side airbag assembly RH (squib) ●Airbag sensor assembly ●Wire harness	Blink
B0113/42 (DI-402)	●Short in side squib (RH) circuit (to B+)	●Side airbag assembly RH (squib) ●Airbag sensor assembly ●Wire harness	Blink
B0115/47 (DI-405)	●Short in side squib (LH) circuit	●Side airbag assembly LH (squib) ●Airbag sensor assembly ●Wire harness	Blink
B0116/48 (DI-409)	●Open in side squib (LH) circuit	●Side airbag assembly LH (squib) ●Airbag sensor assembly ●Wire harness	Blink

DTC No. (See Page)	Detection Item	Trouble Area	SRS Warning Light
B0117/45 (DI-412)	●Short in side squib (LH) circuit (to ground)	●Side airbag assembly LH (squib) ●Airbag sensor assembly ●Wire harness	Blink
B0118/46 (DI-415)	●Short in side squib (LH) circuit (to B+)	●Side airbag assembly LH (squib) ●Airbag sensor assembly ●Wire harness	Blink
B0130/63 (DI-418)	●Short in P/T squib (RH) circuit	●Seat belt pretensioner RH (squib) ●Airbag sensor assembly ●Wire harness	Blink
B0131/64 (DI-422)	●Open in P/T squib (RH) circuit	●Seat belt pretensioner RH (squib) ●Airbag sensor assembly ●Wire harness	Blink
B0132/61 (DI-425)	●Short in P/T squib (RH) circuit (to ground)	●Seat belt pretensioner RH (squib) ●Airbag sensor assembly ●Wire harness	Blink
B0133/62 (DI-428)	●Short in P/T squib (RH) circuit (to B+)	●Seat belt pretensioner RH (squib) ●Airbag sensor assembly ●Wire harness	Blink
B0135/73 (DI-431)	●Short in P/T squib (LH) circuit	●Seat belt pretensioner LH (squib) ●Airbag sensor assembly ●Wire harness	Blink
B0136/74 (DI-435)	●Open in P/T squib (LH) circuit	●Seat belt pretensioner LH (squib) ●Airbag sensor assembly ●Wire harness	Blink
B0137/71 (DI-438)	●Short in P/T squib (LH) circuit (to ground)	●Seat belt pretensioner LH (squib) ●Airbag sensor assembly ●Wire harness	Blink
B0138/72 (DI-441)	●Short in P/T squib (LH) circuit (to B+)	●Seat belt pretensioner LH (squib) ●Airbag sensor assembly ●Wire harness	Blink
B1100/31 (DI-444)	●Airbag sensor assembly malfunction	●Airbag sensor assembly	ON
B1140/32 (DI-446)	●Side airbag sensor assembly (RH) malfunction	●Side airbag sensor assembly (RH) ●Airbag sensor assembly ●Wire harness	Blink
B1141/33 (DI-454)	●Side airbag sensor assembly (LH) malfunction	●Side airbag sensor assembly (LH) ●Airbag sensor assembly ●Wire harness	Blink
B1156/B1157/15 (DI-462)	●Front airbag sensor (RH) malfunction	●Front airbag sensor (RH) ●Airbag sensor assembly ●Wire harness	ON
B1158/B1159/16 (DI-467)	●Front airbag sensor (LH) malfunction	●Front airbag sensor (LH) ●Airbag sensor assembly ●Instrument panel wire harness ●Engine room main wire harness	ON
Normal (DI-475)	●System normal	-	OFF
	●Voltage source drop	●Battery ●Airbag sensor assembly	ON

HINT:

- When the SRS warning light remains lit up and the DTC is the normal code, this means a voltage source drops.
  This malfunction is not stored in memory by the airbag sensor assembly and if the power source voltage returns to normal, the SRS warning light will automatically go out.
- When 2 or more codes are indicated, the codes will be displayed in numeral order starting from the lowest numbered code.
- If a code not listed on the chart is displayed, the airbag sensor assembly is faulty.

SUPPLEMENTAL RESTRAINT SYSTEM

HOW TO PROCEED WITH TROUBLESHOOTING

DI1MX-12

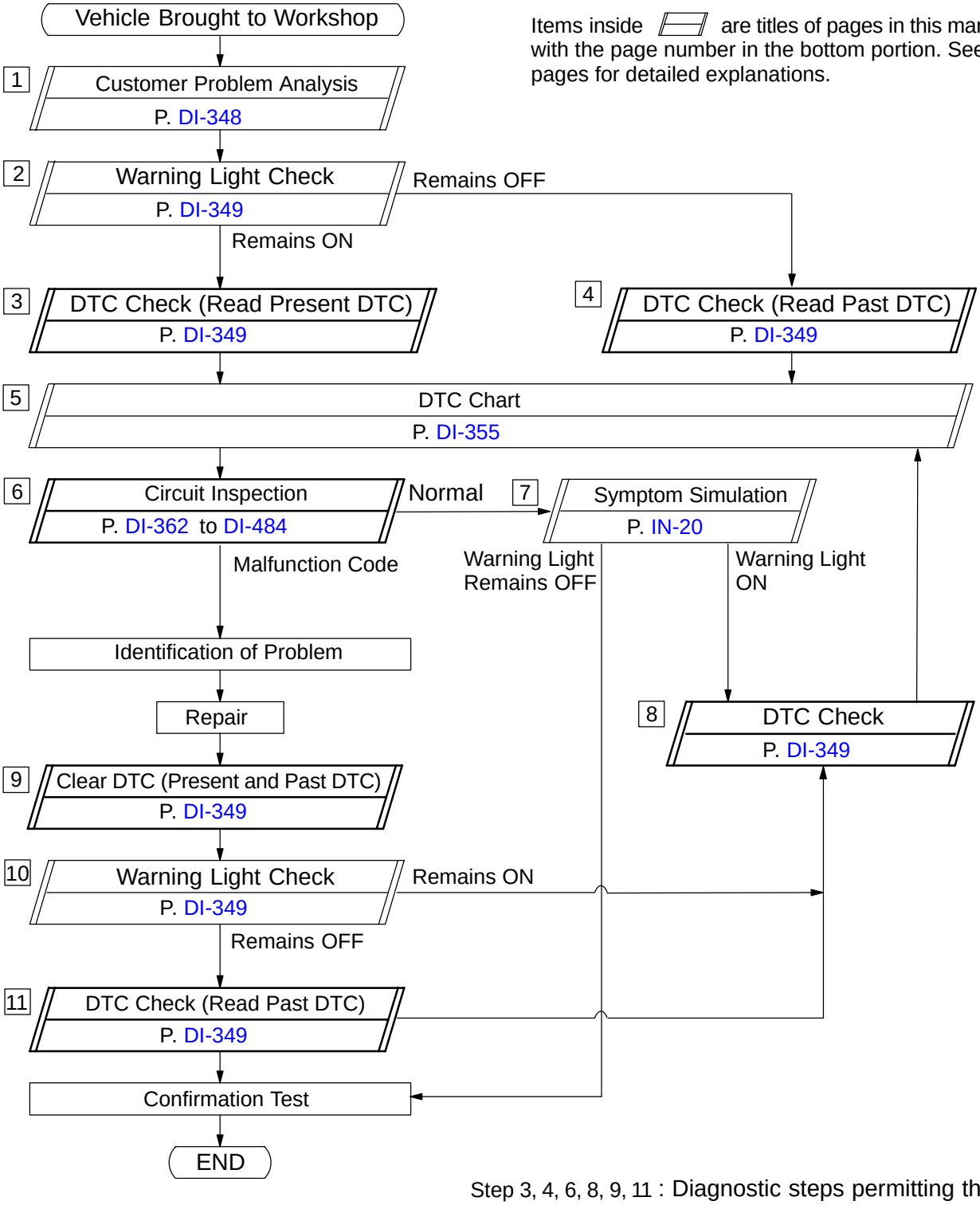

Step 3, 4, 6, 8, 9, 11 : Diagnostic steps permitting the use of the TOYOTA hand-held tester.

DI1N1-10

PARTS LOCATION

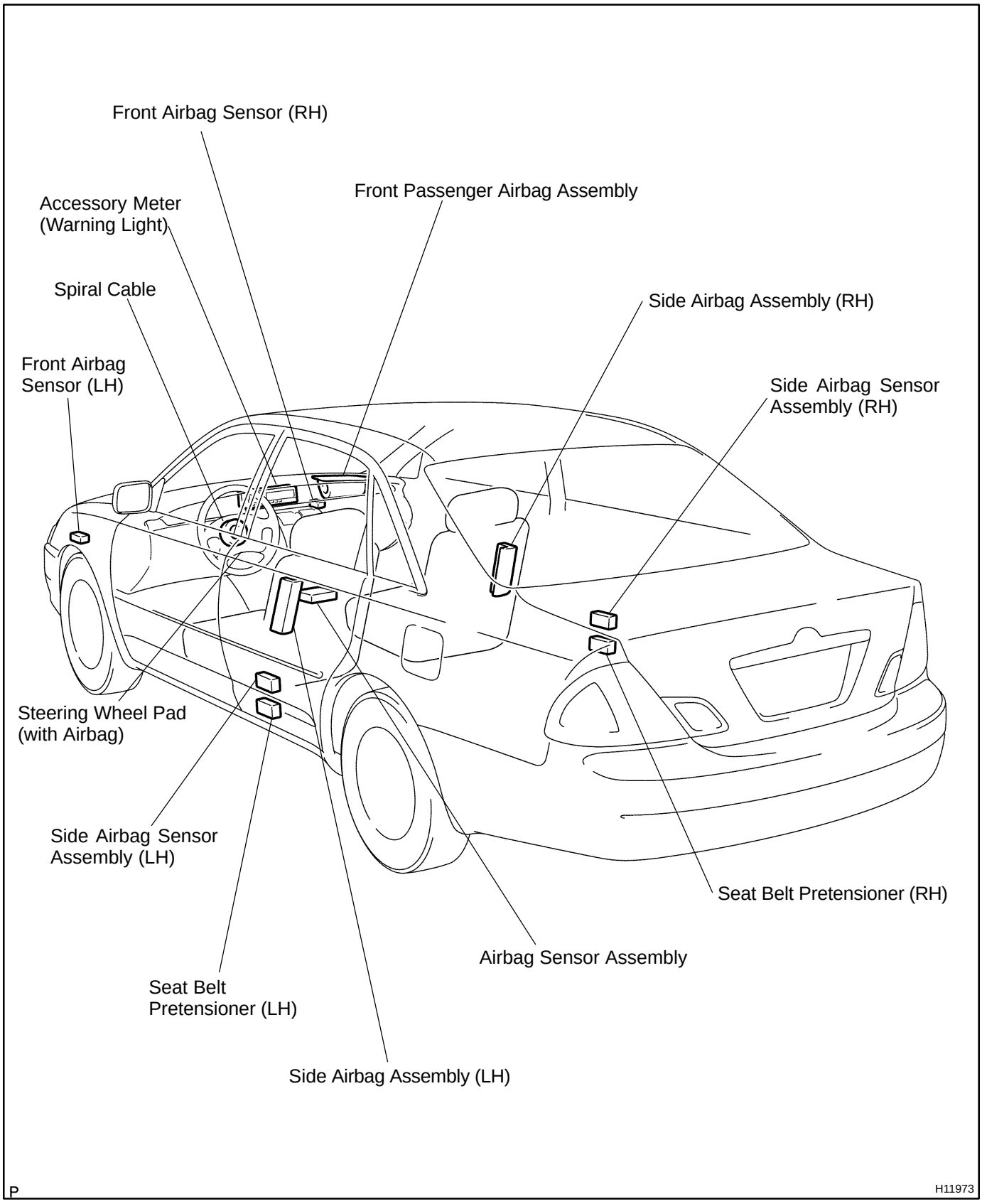

DI1MZ-11

PRE-CHECK

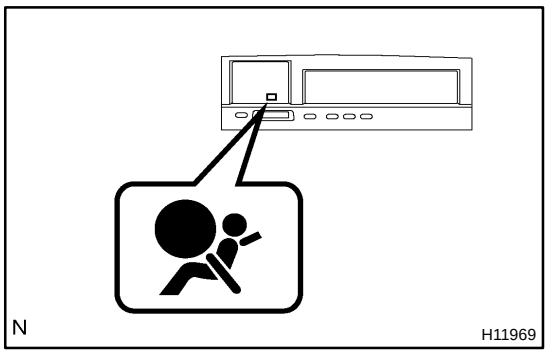

1. SRS WARNING LIGHT CHECK

(a) Turn the ignition switch to the ACC or ON position and check that the SRS warning light lights up.

(b) Check that the SRS warning light goes out after approx. 6 seconds.

HINT:

- When the ignition switch is at ACC or ON and the SRS warning light remains on or flashes, the airbag sensor assembly has detected a malfunction code.
- If, after approx. 6 seconds have elapsed, the SRS warning light sometimes lights up or the SRS warning light lights up even when the ignition switch is OFF, a short in the SRS warning light circuit can be considered likely. Proceed to "SRS warning light circuit malfunction" on page DI-479 .

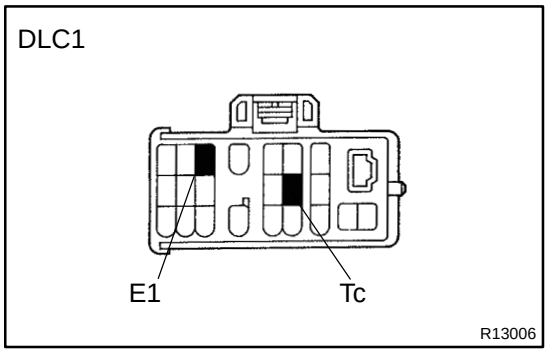

2. DTC CHECK (Using diagnosis check wire)

(a) Present troubles codes:

Output the DTC.

(1) Turn the ignition switch to the ACC or ON position and wait for approx. 20 seconds.

(2) Using SST, connect terminals Tc and E1 of the DLC1.

SST 09843-18020

NOTICE:

Pay due attention to the terminal connecting position to avoid a malfunction.

(b) Past troubles codes:

Output the DTC.

(1) Using service wire, connect terminals Tc and E1 of the DLC1.

SST 09843-18020

(2) Turn the ignition switch to the ACC or ON position and wait for approx. 20 seconds.

NOTICE:

Pay due attention to the terminal connecting position to avoid a malfunction.

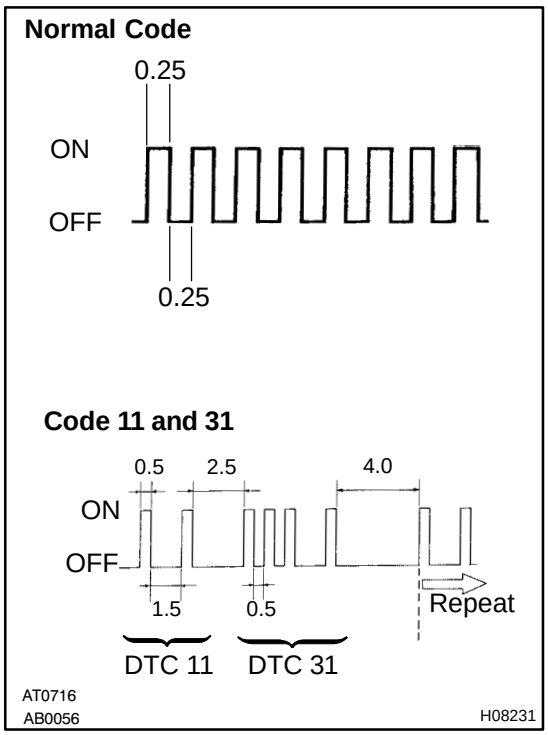

(c) Read the DTC.
Read the 2-digit DTC as indicated by the number of times the SRS warning light blinks. As an example, the blinking patterns, normal, 11 and 31 are shown in the illustration.

- Normal code indication
  The light will blink 2 times per second.
- Malfunction code indication
  The first blinking output indicates the first digit of a 2-digit DTC. After a 1.5-second pause, the second blinking output will indicate the second digit.

If there are 2 or more codes, there will be a 2.5-second pause between each code. After all the codes have been output, there will be a 4.0-second pause and they will all be repeated.
HINT:

- In the event of a number of trouble codes, indication will start from the smallest numbered code.
- If a DTC is not output or a DTC is output without terminal connection, proceed to the Tc terminal circuit inspection on page DI-484 .

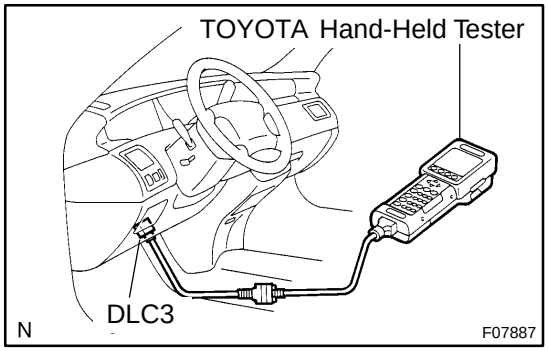

3. DTC CHECK (Using TOYOTA hand-held tester)

(a) Hook up the TOYOTA hand-held tester to the DLC3.
(b) Read the DTCs by following the prompts on the tester screen.

HINT:
Please refer to the TOYOTA hand-held tester operator's manual for further details.

4. DTC CLEARANCE (Not using service wire)

When the ignition switch is turned off, the diagnostic trouble code is cleared.
HINT:
DTC might not be cleared by turning the ignition switch OFF. In this case, proceed to the next step.

5. DTC CLEARANCE (Using service wire)

(a) Connect the 2 service wires to terminals Tc and AB of check connector.
(b) Turn the ignition switch to ACC or ON and wait for approx. 6 seconds.

(c) Starting with the Tc terminal, ground alternately terminal Tc and terminal AB twice each in cycles of 1.0 second. Make sure that the terminals are grounded. Ensure the terminal Tc remain grounded.

HINT:

When alternately grounding terminals Tc and AB, release ground from one terminal and immediately ground the other terminal within an interval of 0.2 seconds.

If DTCs are not cleared, repeat the above procedure until the codes are cleared.

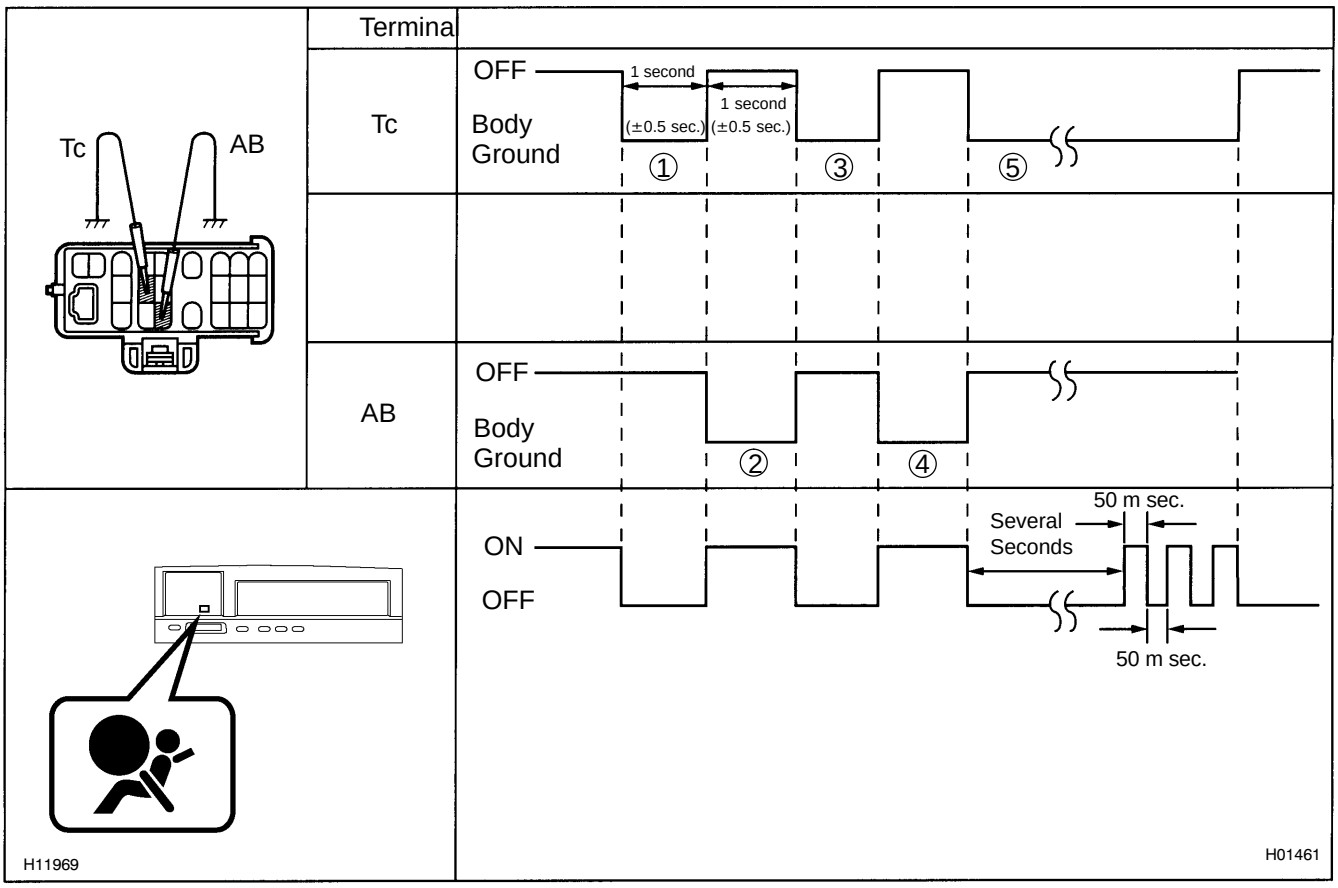

H12011

(d) Several seconds after doing the clearing procedure, the SRS warning light will blink in a 50 - m sec. cycle to indicate the codes which have been cleared.

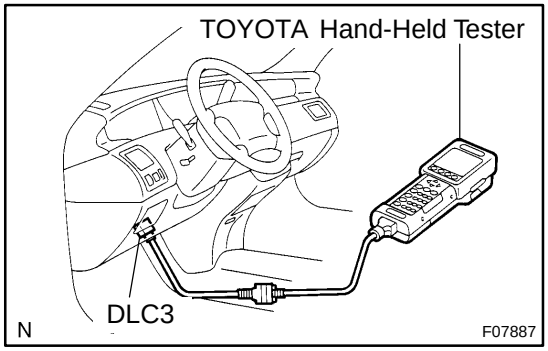

6. DTC CLEARANCE (Using TOYOTA hand-held tester)

(a) Hook up the TOYOTA hand-held tester to the DLC3.

(b) Clear the DTCs by following the prompts on the tester screen.

HINT:

Please refer to the TOYOTA hand-held tester operation's manual for further details.

7. RELEASE METHOD OF AIRBAG ACTIVATION PREVENTION MECHANISM

An airbag activation prevention mechanism is built into the connector for the squib circuit of the SRS.

When release of the airbag activation prevention mechanism is directed in the troubleshooting procedure, as shown in the illustration of the connectors on the next pages, insert paper which has the same thickness as the male terminal between the terminal and the short spring.

CAUTION:

Never release the airbag activation prevention mechanism on the squib connector.

NOTICE:

- **Do not release the airbag activation prevention mechanism unless specifically directed by the troubleshooting procedure.**
- **If the inserted paper is too thick the terminal and short spring may be damaged, so always use paper with the same thickness as the male terminal.**

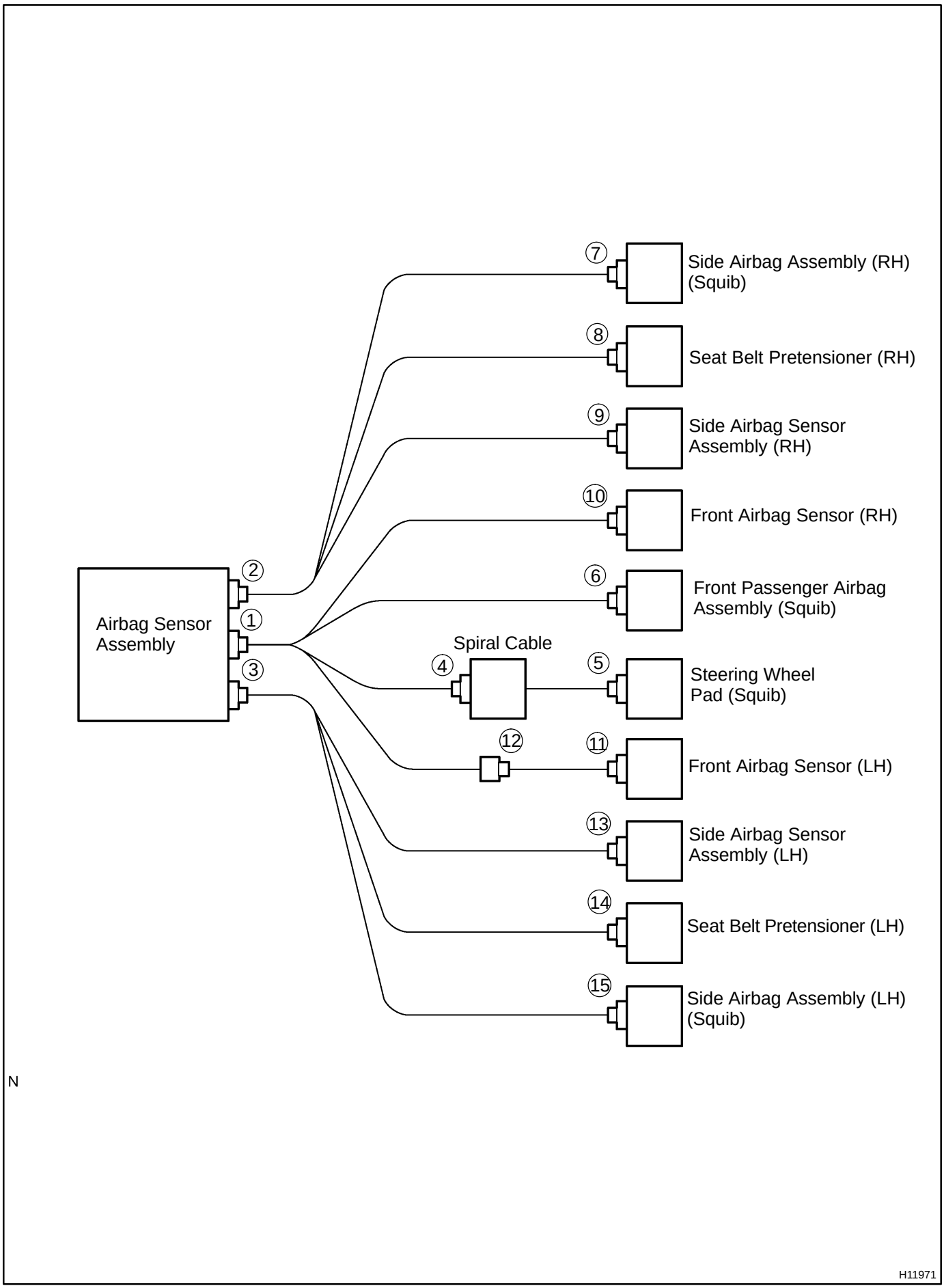
Airbag Sensor Assembly
2
1
3
Spiral Cable
4
7
Side Airbag Assembly (RH) (Squib)
8
Seat Belt Pretensioner (RH)
9
Side Airbag Sensor Assembly (RH)
10
Front Airbag Sensor (RH)
6
Front Passenger Airbag Assembly (Squib)
5
Steering Wheel Pad (Squib)
12
11
Front Airbag Sensor (LH)
13
Side Airbag Sensor Assembly (LH)
14
Seat Belt Pretensioner (LH)
15
Side Airbag Assembly (LH) (Squib)
N
H11971

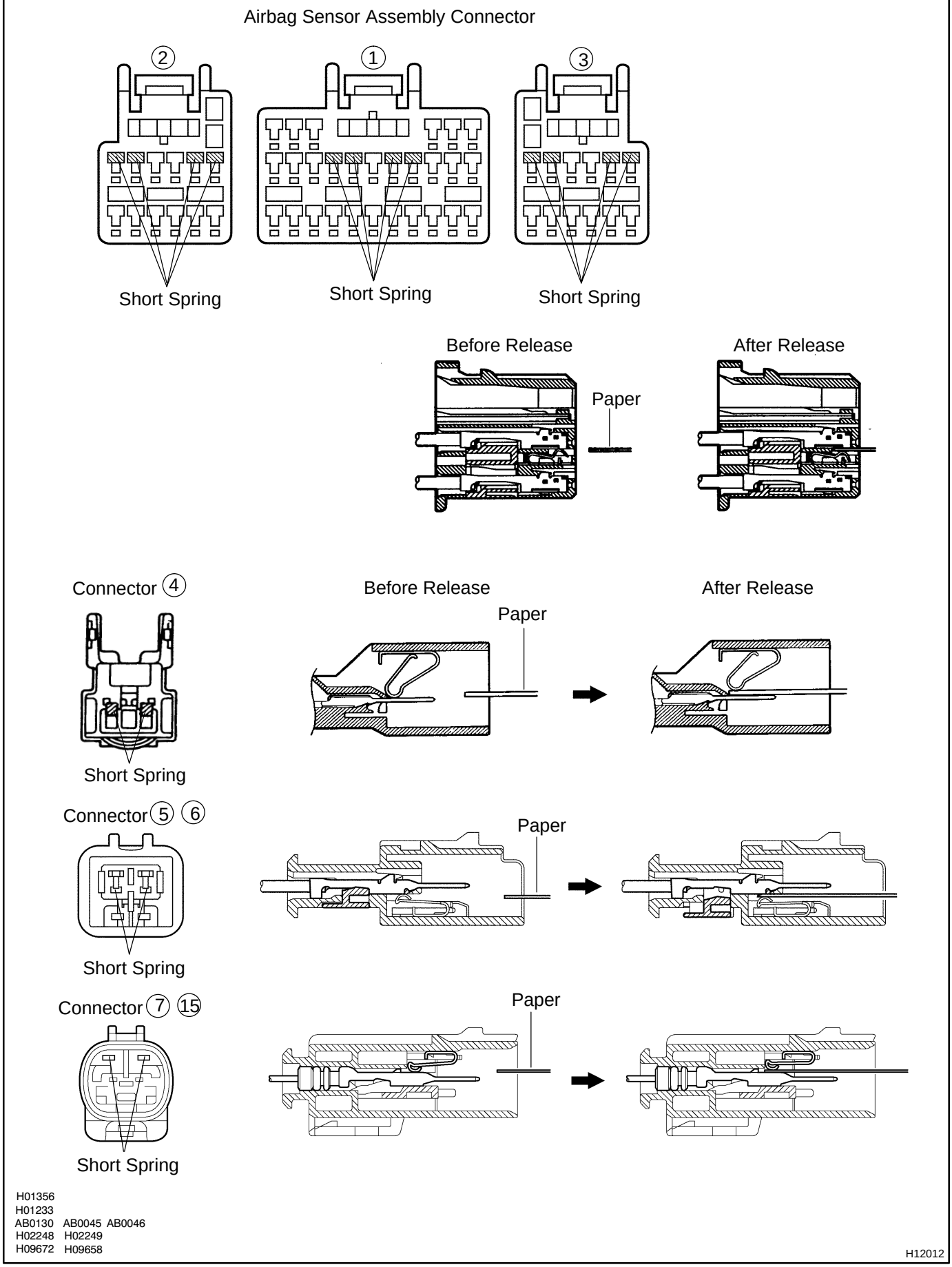

H01356
H01233
AB0130 AB0045 AB0046
H02248 H02249
H09672 H09658

H12012

DI164-28

PROBLEM SYMPTOMS TABLE

Proceed with troubleshooting of each circuit in the table below.

Symptom	Suspect Area	See page
●With the ignition switch in ACC or ON position, the SRS warning light sometimes lights up after approx. 6 seconds have elapsed.	●SRS warning light circuit	DI-479
●SRS warning light is always lit up even when ignition switch is in the LOCK position.		
●With the ignition switch in ACC or ON position, the SRS warning light does not light up.		
●DTC is not displayed.	●Tc terminal circuit	DI-484
●SRS warning light is always lit up at the time of DTC check procedure.		
●DTC is displayed without Tc and E1 terminal connection.		

DI1N2-13

TERMINALS OF ECU

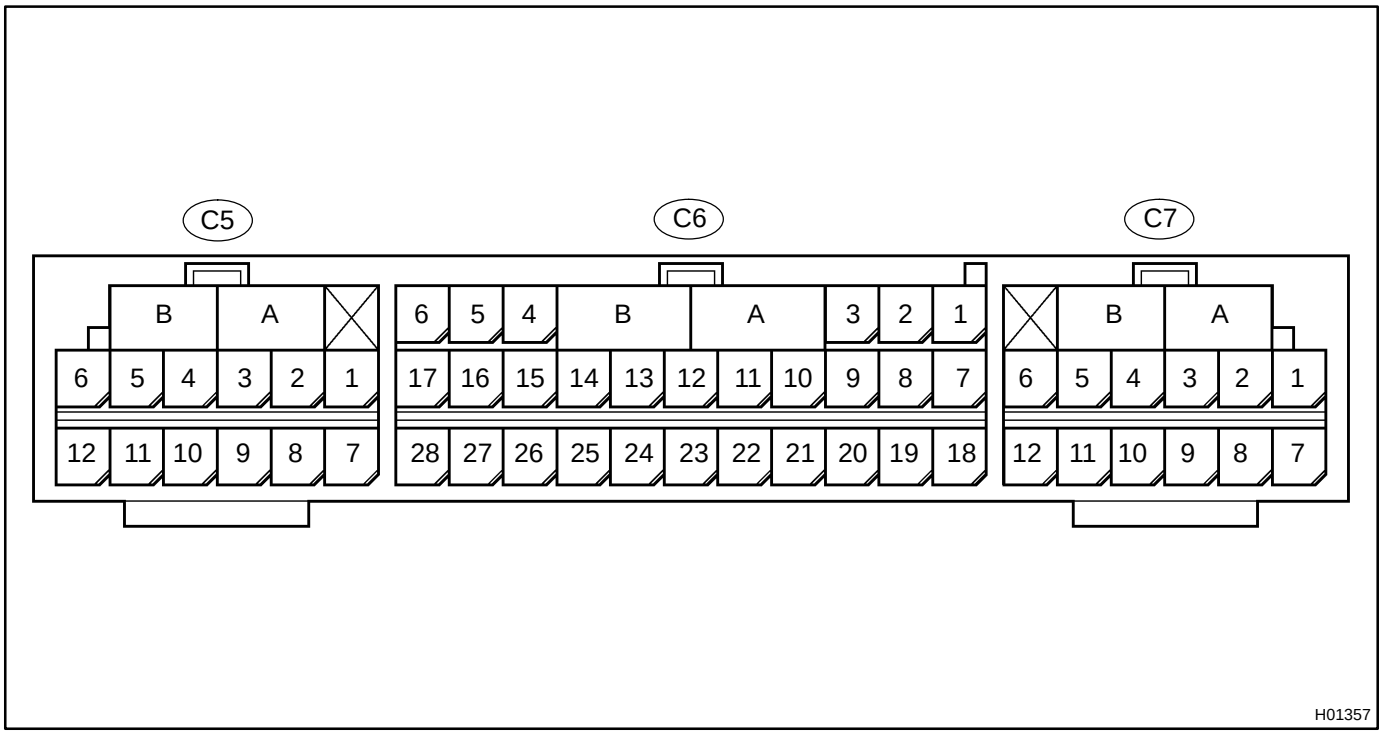

No.	Symbol	Terminal Name
A	-	Electrical Connector Check Mechanism
B	-	Electrical Connector Check Mechanism
C5 - 1	PL-	Squib (Seat Belt Pretensioner, LH)
C5 - 2	PL+	Squib (Seat Belt Pretensioner, LH)
C5 - 5	FL+	Squib (Side, LH)
C5 - 6	FL-	Squib (Side, LH)
C5 - 7	VUPL	Side Airbag Sensor (LH)
C5 - 9	SSL+	Side Airbag Sensor (LH)
C5 - 10	SSL-	Side Airbag Sensor (LH)
C5 - 12	ESL	Side Airbag Sensor (LH)
C6 - 3	LA	SRS Warning Light
C6 - 4	GSW	Body ECU
C6 - 5	IG2	Power Source (IGN Fuse)
C6 - 6	ACC	Power Source (CIG Fuse)
C6 - 9	+SR	Front Airbag Sensor (RH)
C6 - 10	P+	Squib (Passenger)
C6 - 11	P-	Squib (Passenger)
C6 - 12	SIL	Diagnosis
C6 - 13	D-	Squib (Driver)
C6 - 14	D+	Squib (Driver)
C6 - 15	+SL	Front Airbag Sensor (LH)
C6 - 19	Tc	Diagnosis
C6 - 20	-SR	Front Airbag Sensor (RH)
C6 - 26	-SL	Front Airbag Sensor (LH)
C6 - 27	E1	Ground

No.	Symbol	Terminal Name
C6 - 28	E2	Ground
C7 - 1	FR-	Squib (Side, RH)
C7 - 2	FR+	Squib (Side, RH)
C7 - 5	PR+	Squib (Pretensioner, RH)
C7 - 6	PR-	Squib (Pretensioner, RH)
C7 - 7	ESR	Side Airbag Sensor (RH)
C7 - 9	SSR-	Side Airbag Sensor (RH)
C7 - 10	SSR+	Side Airbag Sensor (RH)
C7 - 12	VUPR	Side Airbag Sensor (RH)

DI01W-13

ECU Power Source Circuit

CIRCUIT DESCRIPTION

This circuit provides power to operate the theft deterrent ECU.

WIRING DIAGRAM

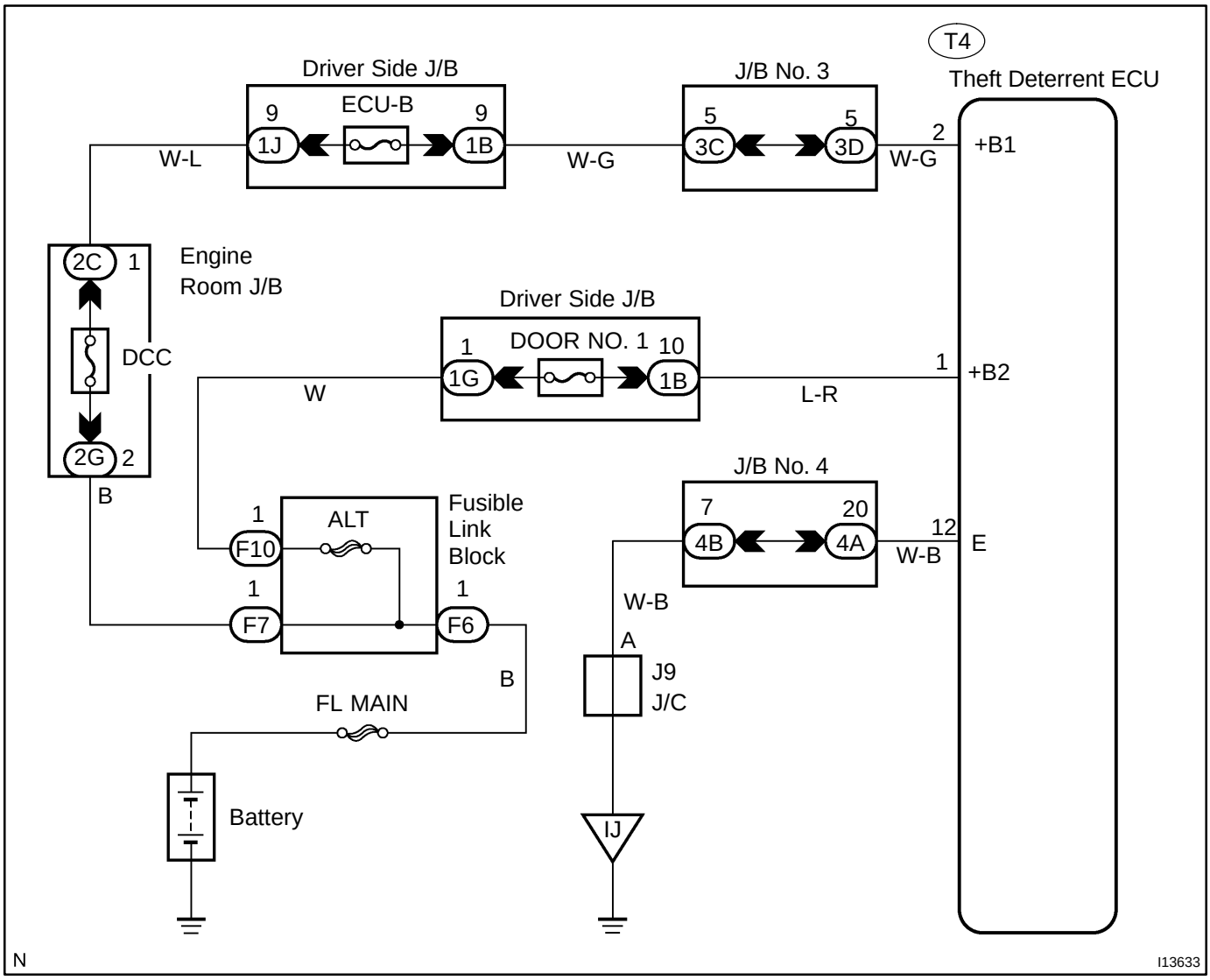

INSPECTION PROCEDURE

1	**Check DOME and DOOR No. 1 fuses.**

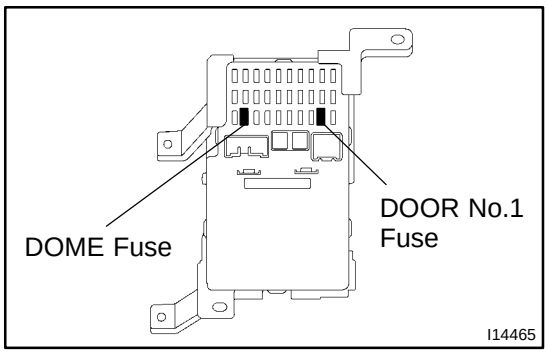

PREPARATION:
Remove DOOR No. 1 and DOME fuse from instrument panel J/B.
CHECK:
Check continuity of DOME and DOOR No. 1 fuses.
OK:
Continuity

NG → **Check for short in all the harness and components connected to the DOME and DOOR No. 1 fuses (See attached wiring diagram).**

OK

2	**Check voltage between terminals each of +B1 and +B2 and E of theft deterrent ECU connector.**

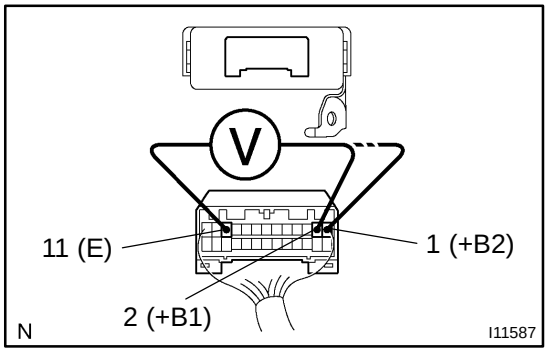

PREPARATION:
Disconnect the theft deterrent ECU connector.
CHECK:
Measure voltage between terminals each of +B1 and +B2 and E of theft deterrent ECU connector.
OK:
Voltage: 10 - 14 V

OK → **Proceed to next circuit inspection shown on problem symptom table (See page DI-531).**

NG

3	**Check for open in harness and connector between ECU and body ground (See page IN-30).**

NG → **Repair or replace harness or connector.**

OK

Check and repair harness and connector between ECU and battery.

DI6L4-01

Engine Hood Courtesy Switch Circuit

CIRCUIT DESCRIPTION

The engine hood courtesy switch is built into the engine hood lock assembly and goes ON when the engine hood is opened and goes OFF when the engine hood is closed.

WIRING DIAGRAM

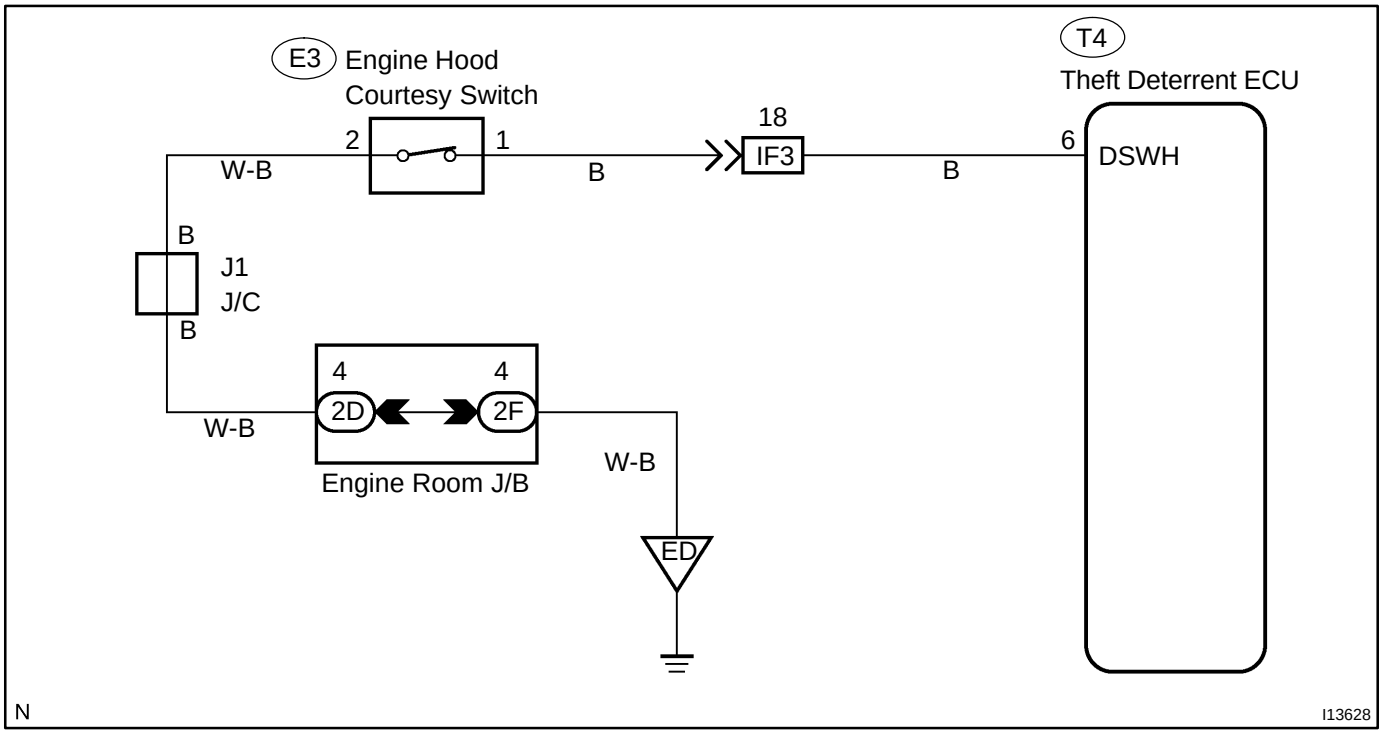

INSPECTION PROCEDURE

1	**Check engine hood courtesy switch.**

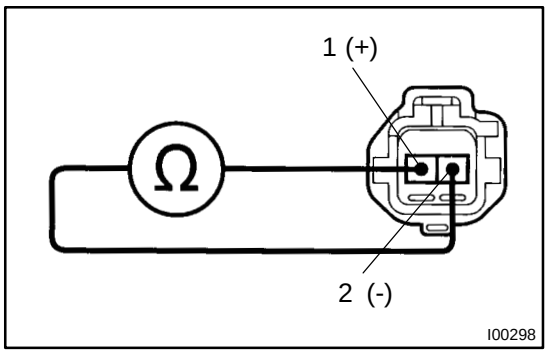

PREPARATION:

(a) Remove engine hood lock assembly.

(b) Disconnect engine hood courtesy switch connector.

CHECK:

Check continuity between terminals 1 and 2 when engine hood lock is locked and unlocked.

OK:

Engine hood lock	Tester connection	Specified condition
LOCK	-	No continuity
UNLOCK	1 - 2	Continuity

NG → **Replace engine hood courtesy switch.**

OK ↓

2	**Check harness and connector between theft deterrent ECU and switch, switch and body ground (See page IN-30).**

NG → **Repair or replace harness or connector.**

OK ↓

Check and replace theft deterrent ECU (See page IN-30).

DI022-14

Ignition Switch Circuit

CIRCUIT DESCRIPTION

When the ignition switch is turned to the ACC position, battery positive voltage is applied to the terminal ACC of the ECU. Also, if the ignition switch is turned to the ON position, battery positive voltage is applied to the terminals ACC and IG of the ECU. When the battery positive voltage is applied to the terminal ACC of the ECU while the theft deterrent system is activated, the warning stops. Furthermore, power supplied from the terminals ACC and IG of the ECU is used as power for the door courtesy switch, and position switch, etc.

WIRING DIAGRAM

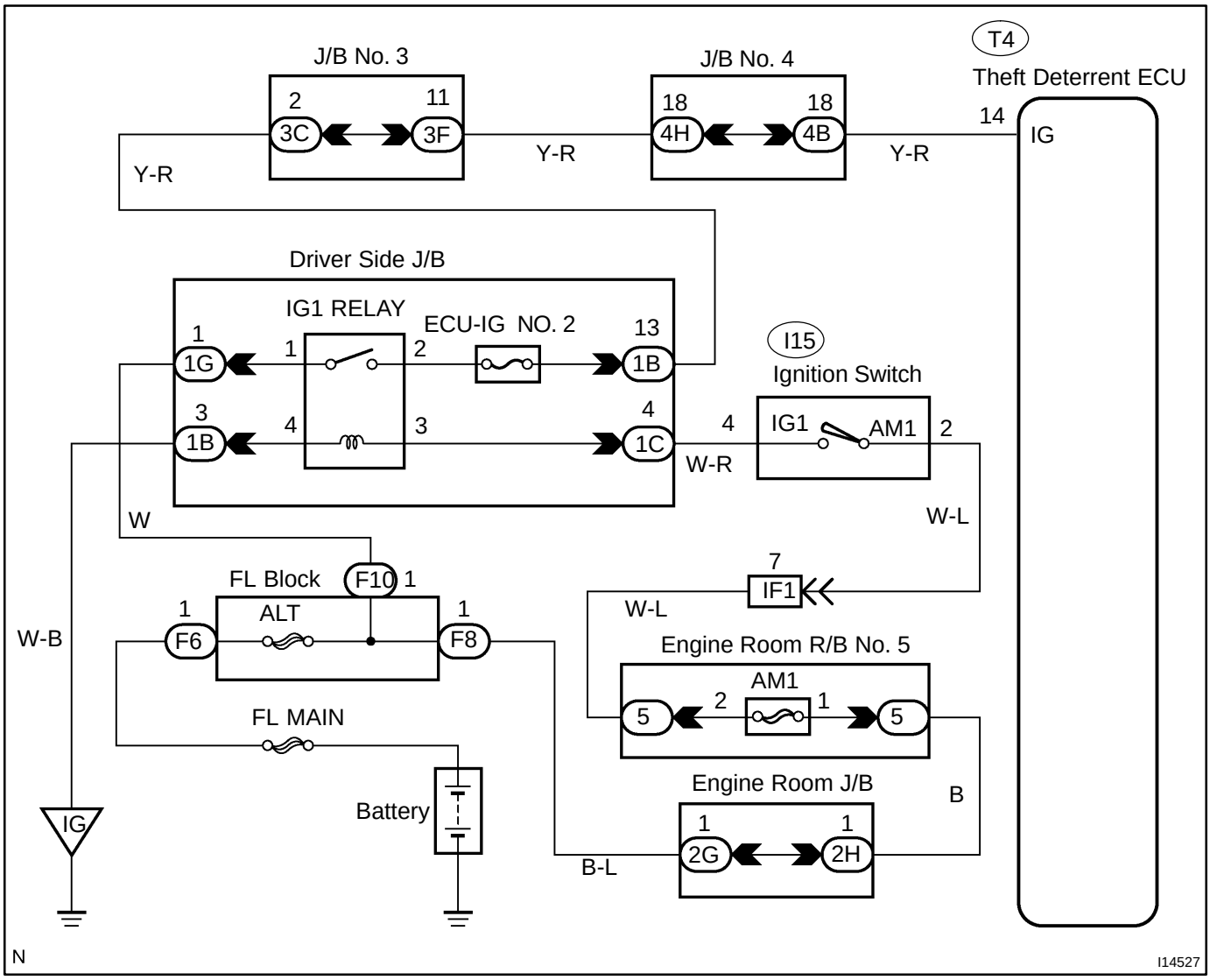

INSPECTION PROCEDURE

1	**Check CIG and ECU-IG fuses.**

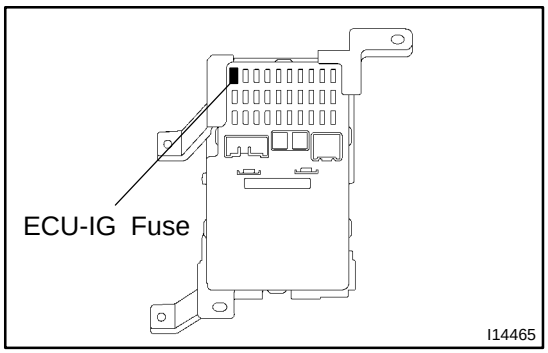

PREPARATION:
(a) Remove the fuse box opening cover.
(b) Remove ECU-IG fuses from instrument panel J/B.

CHECK:
Check continuity of ECU-IG fuses.

OK:
Continuity

NG → **Check for short in all the harness and components connected to the ECU-IG fuses (See attached wiring diagram).**

OK

2	**Check voltage between terminal IG of theft deterrent ECU and body ground.**

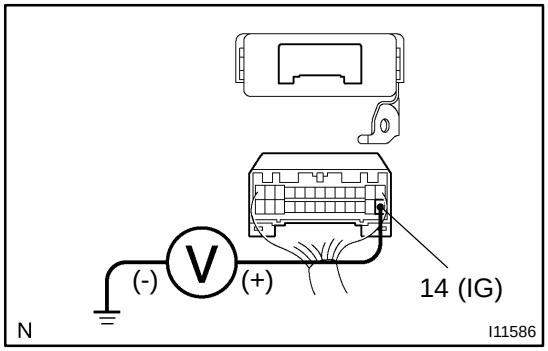

PREPARATION:
(a) Disconnect the theft deterrent ECU connectors.
(b) Turn ignition switch ON.

CHECK:
Measure voltage between terminal IG of theft deterrent ECU connector and body ground.

OK:
Voltage: 10 - 14 V

NG → **Check and repair harness and connector between theft deterrent ECU and battery (See page IN-30).**

OK

Check and replace theft deterrent ECU.

DI6L1-01

CIRCUIT INSPECTION

Indicator Light Circuit

CIRCUIT DESCRIPTION

When the theft deterrent system is preparing to set, this circuit lights up the indicator light. When the system has been set, it continuously turns the indicator light on for 0.75 secs. and turns it off for 1.25 secs., thus blinking the indicator light.

WIRING DIAGRAM

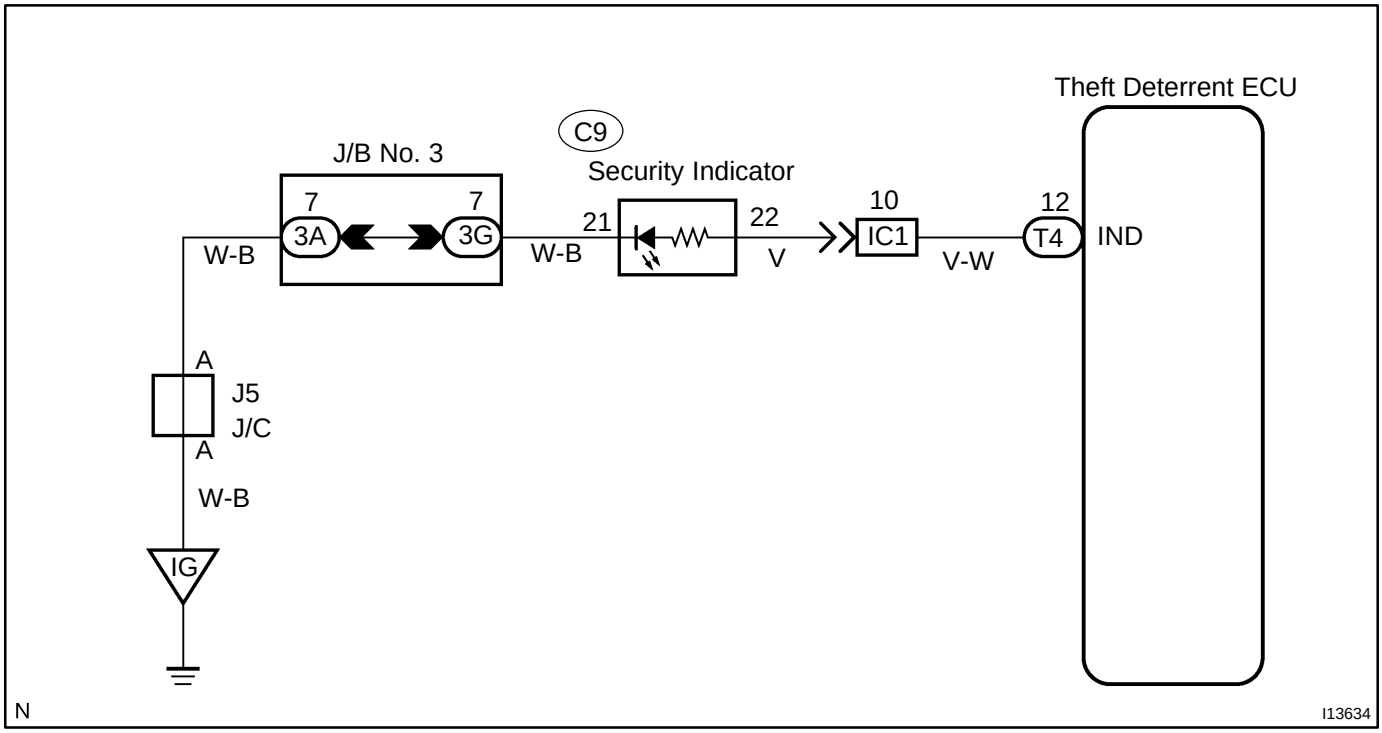

INSPECTION PROCEDURE

1	**Check indicator light.**

PREPARATION:

Remove combination meter.

CHECK:

Connect the positive (+) lead from the battery to terminal B22 and the negative (-) lead to terminal B21 of combination meter connector then check indicator light comes ON.

(See combination meter on page BE-43)

NG → **Replace combination meter.**

OK

2	**Check harness and connector between theft deterrent ECU and indicator light, indicator light and body ground (See page IN-30).**

NG → **Repair or replace harness or connector.**

OK

Check and replace theft deterrent ECU.*1

*1: When there is a malfunction that the theft deterrent system cannot be set, proceed to the next numbered circuit inspection shown on problem symptom table (See page DI-531).

DI6L3-01

Key Unlock Warning Switch Circuit

CIRCUIT DESCRIPTION

The key unlock warning switch goes ON when the ignition key is inserted in the key cylinder and goes OFF when the ignition key is removed.
The ECU operates the key confinement prevention function while the key unlock warning switch is ON.

WIRING DIAGRAM

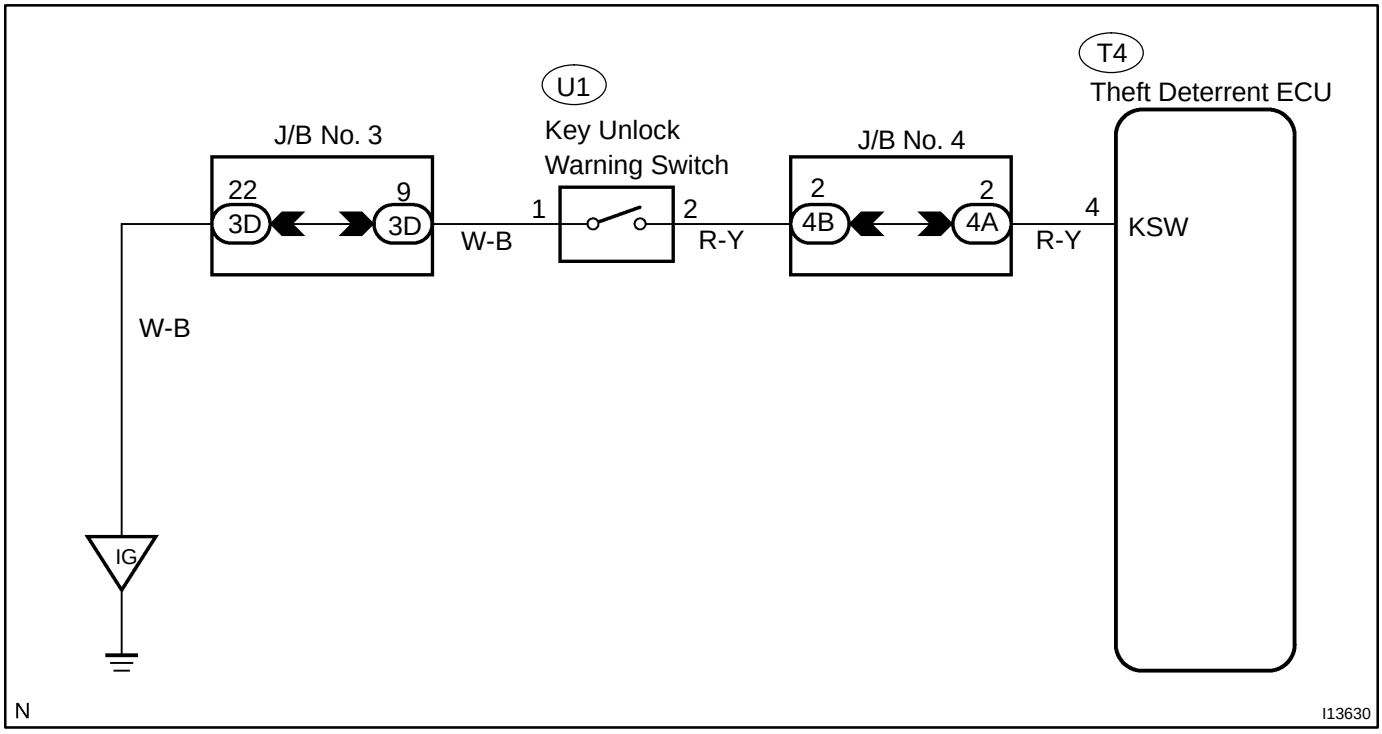

INSPECTION PROCEDURE

1	**Check key unlock warning switch.**

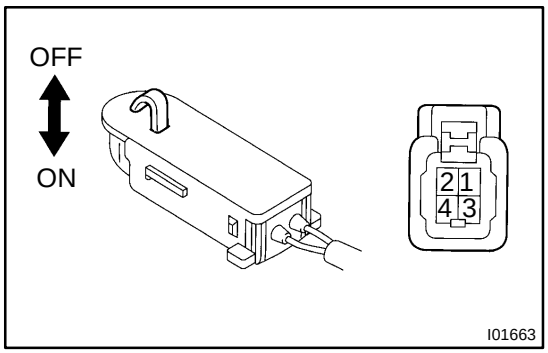

PREPARATION:

Disconnect key unlock warning switch connector.

CHECK:

Check continuity between terminal 1 and 2 of key unlock warning switch connector, when the key is inserted to the key cylinder or removed.

OK:

Switch position	Tester connection	Specified condition
ON (Key inserted)	1 - 2	Continuity
OFF (Key removed)	-	No continuity

NG → **Replace key unlock warning switch.**

OK ↓

2	**Check harness and connectors between ECU and key unlock warning switch, key unlock warning switch and body ground (See page IN-30).**

NG → **Repair or replace harness or connector.**

OK ↓

Check and replace theft deterrent ECU.*1

*1: When there is a malfunction that the theft deterrent system cannot be set, proceed to the next numbered circuit inspection shown in problem symptom table (See page DI-531).

DI024-12

Luggage Compartment Door Key Lock and Unlock Switch Circuit

CIRCUIT DESCRIPTION

The luggage compartment door key lock and unlock switch goes ON when the luggage compartment door key cylinder is turned to the unlock side with the key.

WIRING DIAGRAM

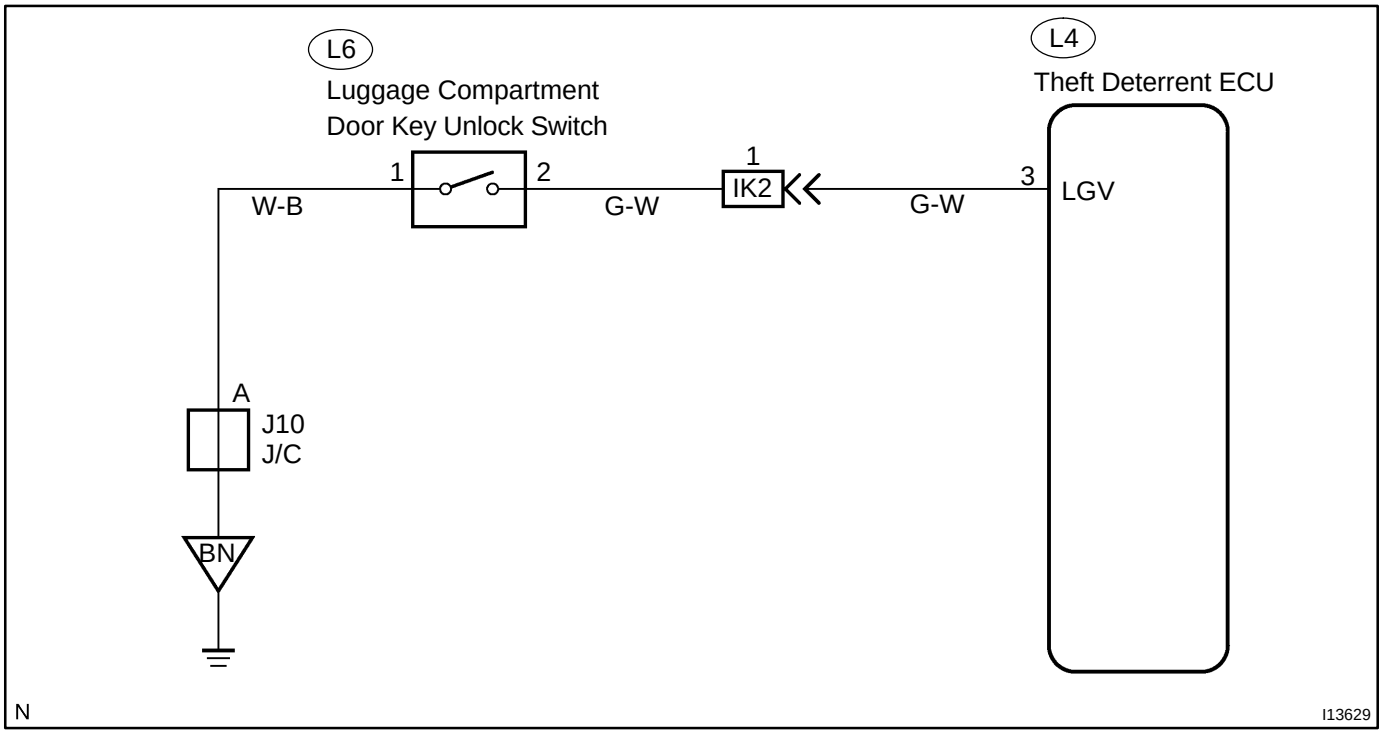

INSPECTION PROCEDURE

1	Check voltage between terminal 1 of luggage compartment door key lock and unlock switch connector and body ground.

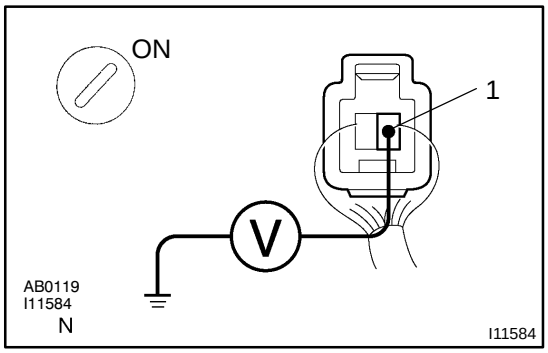

PREPARATION:

(a) Remove luggage compartment door trim.

(b) Turn ignition switch ON.

CHECK:

Measure voltage between terminal 1 of luggage compartment door key lock and unlock switch connector and body ground, when the key is turned to the unlock side and not turned respectively.

OK:

Key operation	Voltage
Turned to the unlock side	0 V
Not turned	Battery positive voltage

OK	Check and replace theft deterrent ECU.*1

NG

2	Check luggage compartment door key lock and unlock switch.

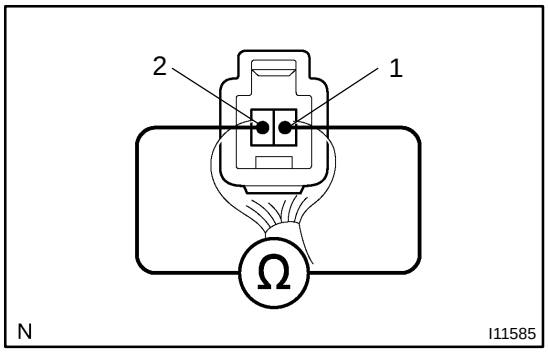

PREPARATION:

Disconnect luggage compartment door key lock and unlock switch connector.

CHECK:

Check continuity between terminals 1 and 2, when the key is turned to the unlock side and not turned respectively.

OK:

Key operation	Tester connection	Specified condition
Turned to unlock	1 - 2	Continuity
Not turned	-	No continuity

NG	Repair or replace luggage compartment door key lock and unlock switch.

OK

3	**Check harness and connector between theft deterrent ECU and key lock and unlock switch, key lock and unlock switch and body ground (See page IN-30).**

NG → **Repair or replace harness or connector.**

OK →

Check and replace theft deterrent ECU.*1

*1: When there is a malfunction that the theft deterrent system cannot be set, proceed to the next numbered circuit inspection shown on problem symptom table (See page DI-531).

DI6L2-01

Theft Deterrent Horn Circuit

CIRCUIT DESCRIPTION

When the theft deterrent system is activated, the relay in the ECU turns ON and OFF cycles of approximately 0.2 sec., causing the theft deterrent horn to blow (See the wiring diagram below).
In this condition, if any of the following operations is done, the relay in the ECU turns OFF, thus stopping the theft deterrent horn from blowing:

(1) Unlock the front LH or RH door with key.
(2) Turn the ignition switch to ACC or ON position.
(3) Unlock the doors with the wireless door lock control system.
(4) Wait for approximately 60 seconds.
(5) Push the panic switch of the wireless door lock control system.

WIRING DIAGRAM

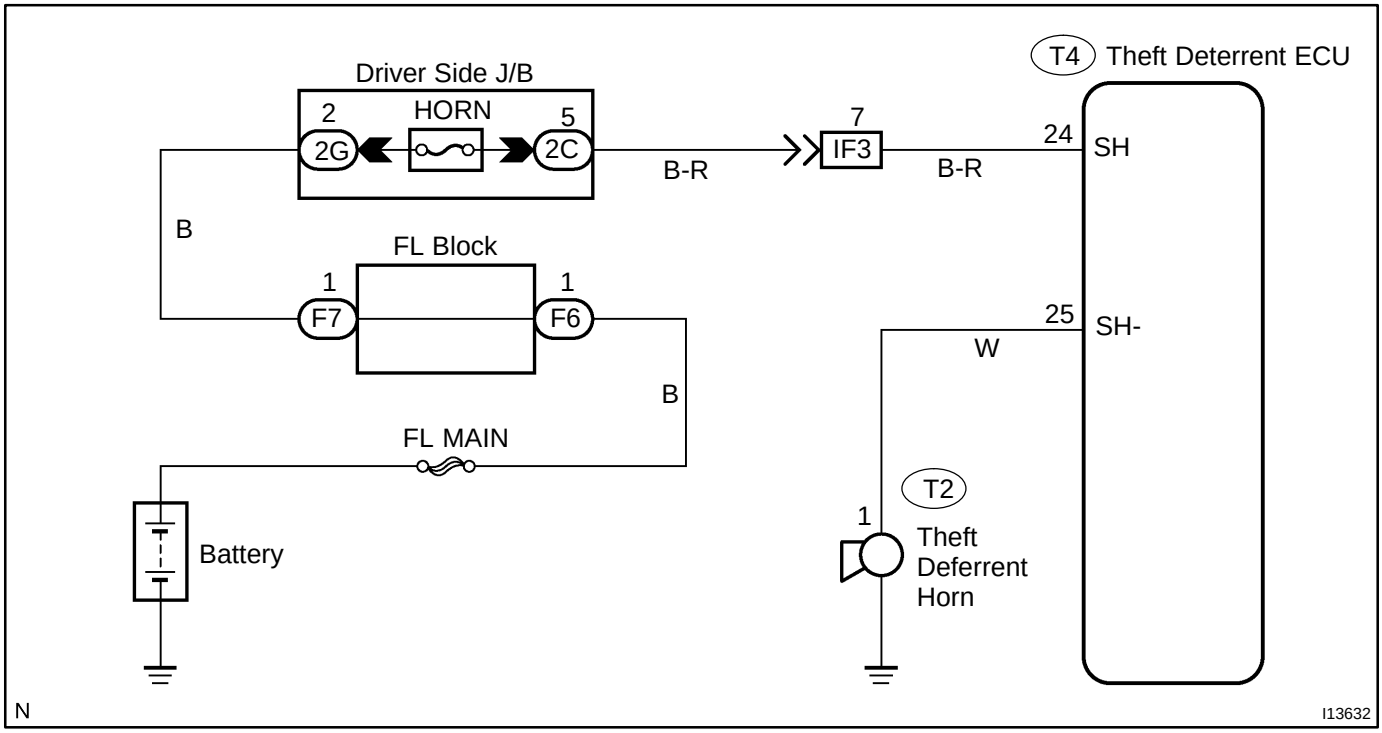

INSPECTION PROCEDURE

HINT:

The flow chart below is based on the premise that the horns blow normally whenever the horn switch is operated. If horn operation is not normal when the horn switch is operated, check the horn switch.

1	**Check voltage between terminal SH of theft deterrent ECU connector and body ground.**

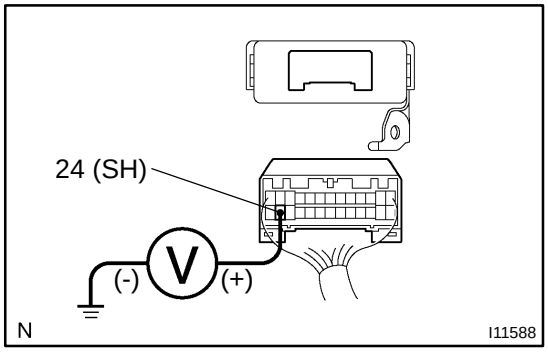

PREPARATION:

Disconnect the theft deterrent ECU connectors.

CHECK:

Measure voltage between terminal SH of theft deterrent ECU connector and body ground.

OK:

Voltage: 10 - 14 V

NG → **Check and repair harness and connector between theft deterrent ECU and horn relay.**

OK

2	**Check voltage between terminal 1 of theft deterrent horn connector and body ground.**

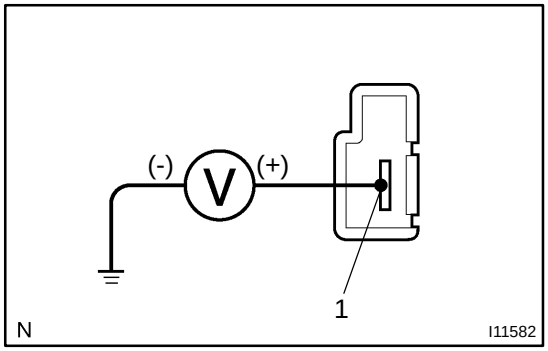

PREPARATION:

Remove the theft deterrent horn and disconnect the connector.

CHECK:

Measure voltage between terminal 1 of theft deterrent horn connector and body ground.

OK:

Voltage: 10 - 14 V

NG → **Check and repair harness and connector between HORN fuse and theft deterrent horn.**

OK

3	**Check theft deterrent horn.**

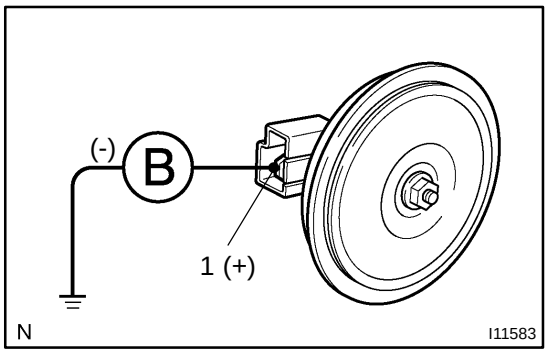

CHECK:

Connect positive (+) lead to terminal 1 and negative (-) lead to ground to theft deterrent horn connector.

OK:

Theft deterrent horn blows.

NG → **Replace theft deterrent horn.**

OK

4	**Check harness and connector between theft deterrent ECU and theft deterrent horn (See page IN-30).**

NG → **Check and repair harness or connector.**

OK

Check and replace theft deterrent ECU.

DI01Q-10

CUSTOMER PROBLEM ANALYSIS CHECK

THEFT DETERRENT SYSTEM Check Sheet

Inspector's name: _____

Customer's Name		**Registration No.**	
		Registration Year	
		Frame No.	
Date of Vehicle Brought in	/ /	**Odometer Reading**	**km Mile**

Date Problem First Occurred		/ /
Frequency Problem Occurs		● Constant ● Sometimes (Times per day, month) ● Once only
Weather Conditions When Problem Occurred	**Weather**	● Fine ● Cloudy ● Rainy ● Snowy ● Various/Others
	Outdoor temperature	● Hot ● Warm ● Cool ● Cold (Approx. °F (°C))

Problem Symptom

● Theft deterrent system cannot be set.		
● Indicator light does not flash when the theft deterrent system is set. (It stays on or does not light at all.)		
● Theft deterrent system does not operate.	● When unlocked using the door lock knob. ● When the engine hood is opened.	Malfunction ● Horns only ● Theft deterrent horn only ● Headlights only ● Taillights only ● Starter cut only ● Door lock operation only
● System cannot be canceled once set.	● When door is unlocked using key or wireless door lock control system. ● When the key is inserted in the ignition key cylinder and turned to ACC or ON position. (However, only when the system has never operated) ● When the luggage compartment door is opened with the key.	
● System cannot be canceled during warning operation.	● When door is unlocked using key or wireless door lock control system. ● When the key is inserted in the ignition key cylinder and turned to ACC or ON position.	
● Warning operation starts when the system is set and the door or luggage compartment door is opened with the key.		
● Others.		

THEFT DETERRENT SYSTEM

HOW TO PROCEED WITH TROUBLESHOOTING

DI01P-11

HINT:

Troubleshooting of the theft deterrent system is based on the premise that the door lock control system is operating normally. Accordingly, before troubleshooting the theft deterrent system, first make certain that the door lock control system is operating normally.

For troubleshooting use a volt/ohm meter.

Be sure to use troubleshooting procedure appropriate to the diagnostic tool being used.

Perform troubleshooting in accordance with the procedure on the following page.

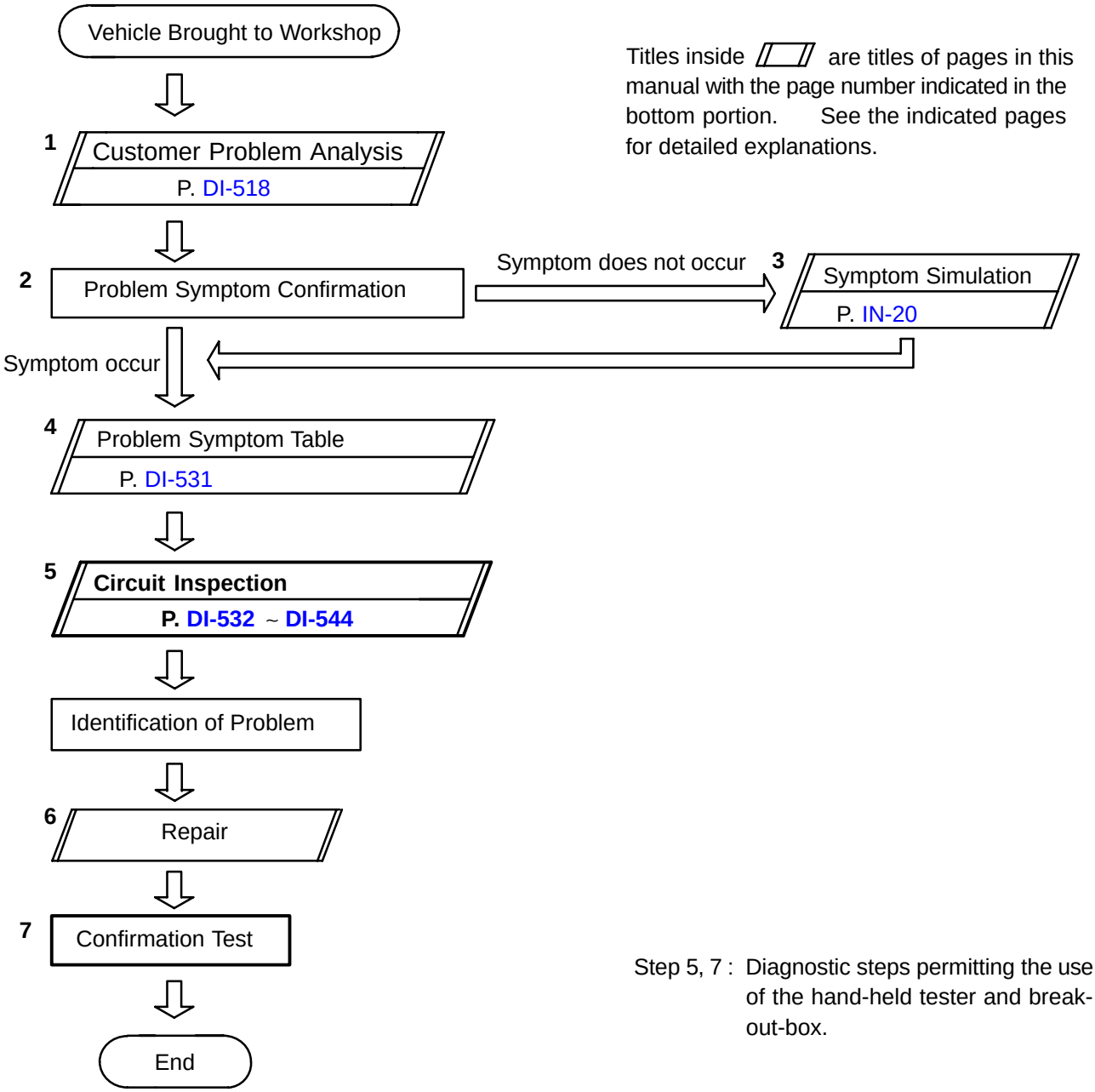

Titles inside ▱ are titles of pages in this manual with the page number indicated in the bottom portion. See the indicated pages for detailed explanations.

Step 5, 7 : Diagnostic steps permitting the use of the hand-held tester and break-out-box.

DI6L0-01

PARTS LOCATION

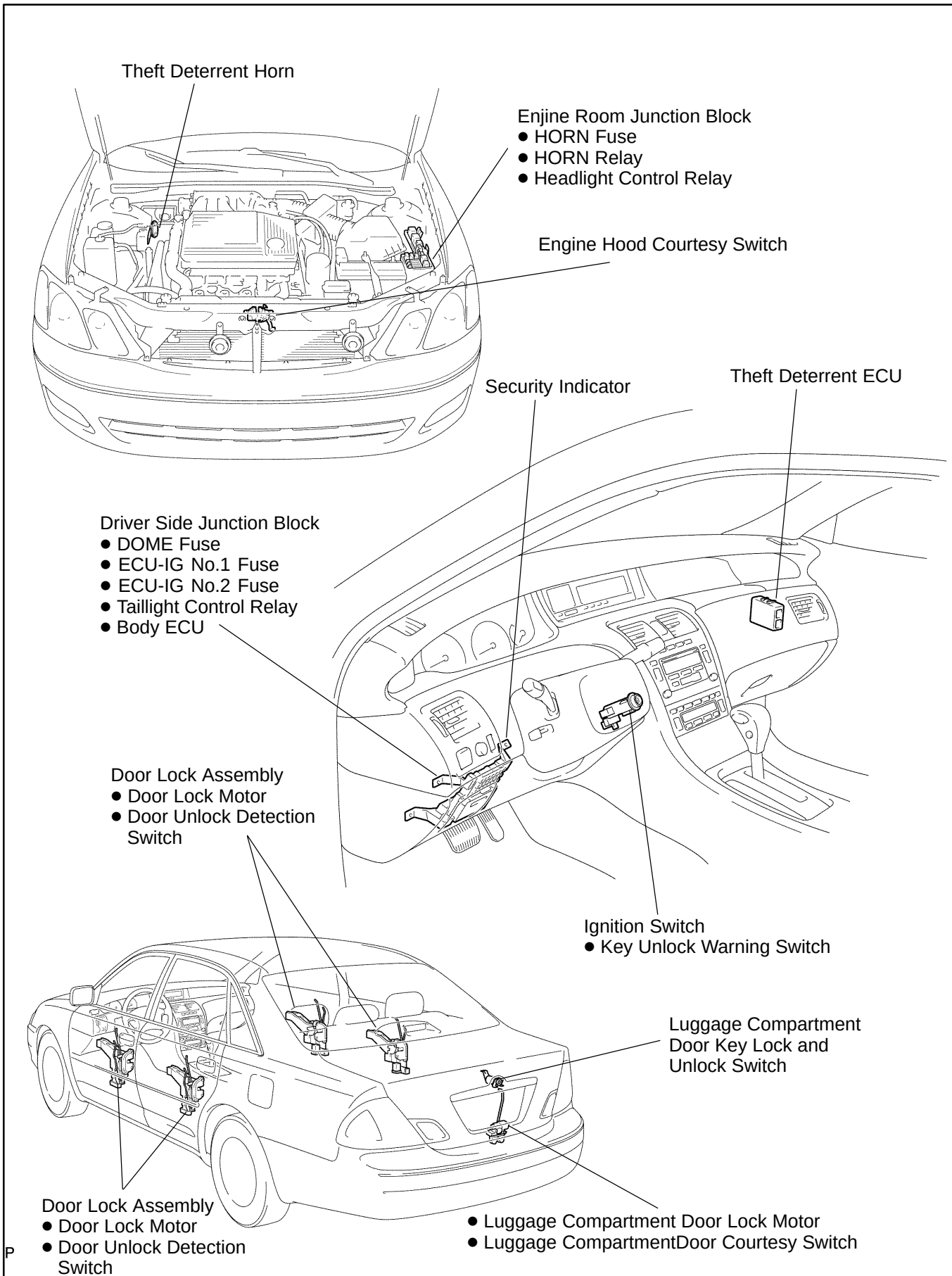

I11668

DI4DL-03

PRE-CHECK

1. THEFT DETERRENT SYSTEM

When the system is set to the theft deterrent mode and any of the following conditions are met, the system sounds the horns and flashes the headlights and the taillights for approx. 1 minute.

At the same time the system locks all doors (If all door are not locked at once, the system repeats door locking operation every 6.38 seconds during the one minute alarm time).

There are 2 modes in this system, which are active mode and passive mode.

All initial setting are performed in active mode. It can be switched to passive mode by specified operation. (See step 4. CHANGING METHOD OF PASSIVE MODE)

Condition:

- ☐ Any of the doors (Including the engine hood and luggage compartment door) is unlocked or opened without the key. *1
- ☐ The battery terminal is disconnected and reconnected.
- ☐ The system receives panic signal from remote keyless entry. *2

*1: Only active arming mode.

*2: When the ignition key is not inserted in the key cylinder.

There are 4 conditions in this system which are disarming condition, disarming preparation condition, arming condition and alarming condition.

(a) Disarming condition:
  (1) When a user is near the vehicle.
  (2) When the alarming function does not operate.
  (3) When theft deterrent function is not performed.

(b) Disarming preparation condition:
  (1) Time from a user locks a door to be leaves the vehicle.
  (2) Time until transferring to disarming condition.
  (3) Theft deterrent function is not performed.

(c) Arming condition:
  (1) When a user leaves the vehicle completely.
  (2) When theft deterrent function is possible.

(d) Alarming condition:
Is this condition, once theft is detected, it is informed using light and sound to people around the vehicle.
Refer to the table for alarming method or time.

Alarming method	Horn
	Security horn
	Headlight
	Taillight
Alarming time	60 seconds
Alarming output	Continuous 0.40 secs. (ON) 0.40 secs. (OFF)

In the arming condition when either of doors is unlocked and with not key in the key cylinder, force lock signal is output.

2. ACTIVE ARMING MODE

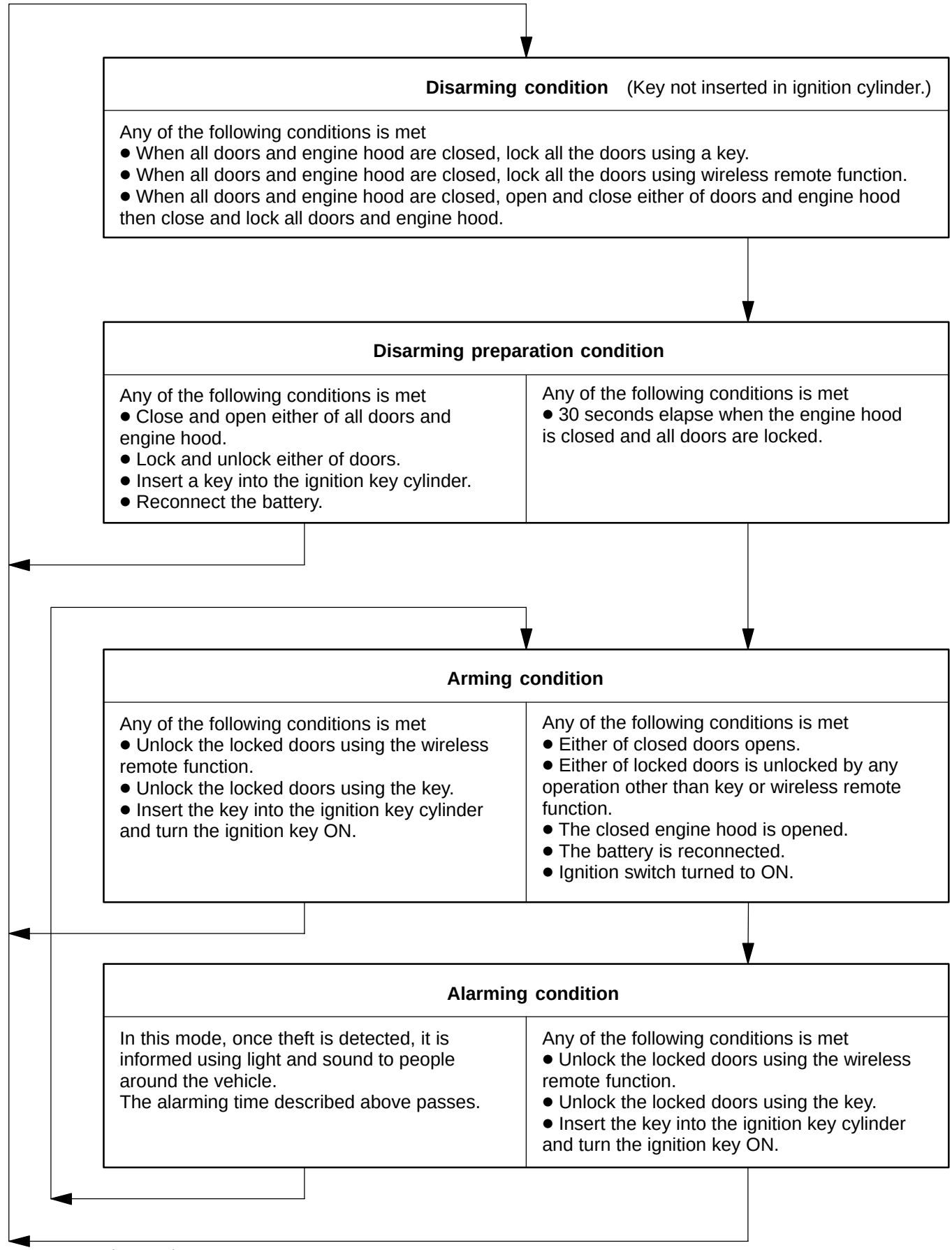

2001 AVALON (RM808U)

Indicator light output:

Condition	Indicator light
Disarming condition	OFF
Arming preparation condition	ON
Arming condition	OFF
Alarming condition	ON

HINT:
Even in disarming condition, the indicator light flash. (Due to the signal output form immobilizer system). The indicator always flashes receiving the signal from the immobilizer system at any time in the arming condition.

Flashing frequency:
0.2 seconds (ON)
1.8 seconds (OFF)

3. PASSIVE ARMING MODE

- □ This mode can be switched according to the specified operation.
- □ All initially set modes (when shipped from factory) are active mode. (No passive mode)

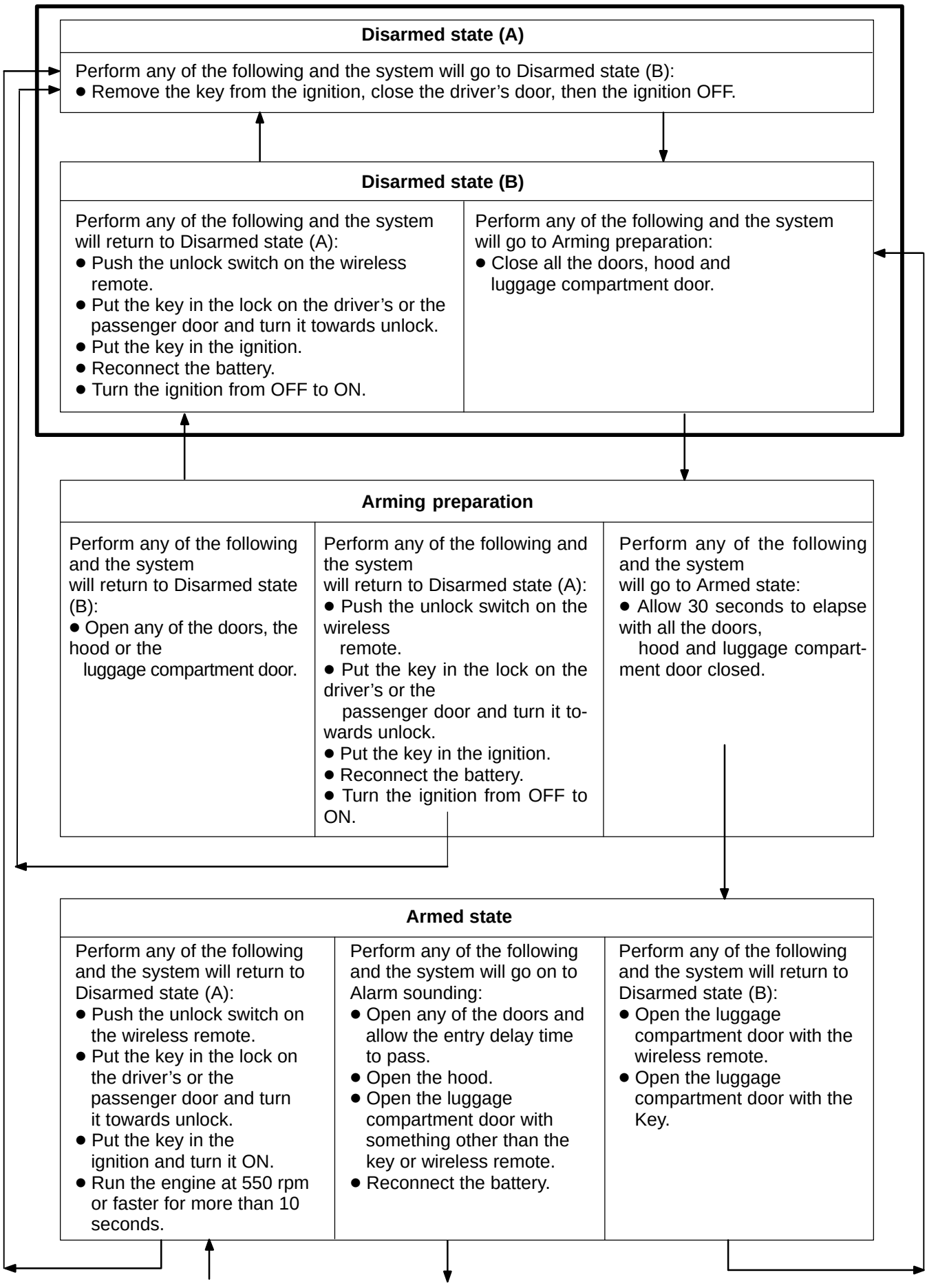
Disarmed state (A)
Perform any of the following and the system will go to Disarmed state (B):
● Remove the key from the ignition, close the driver's door, then the ignition OFF.
Disarmed state (B)
Perform any of the following and the system will return to Disarmed state (A):
● Push the unlock switch on the wireless remote.
● Put the key in the lock on the driver's or the passenger door and turn it towards unlock.
● Put the key in the ignition.
● Reconnect the battery.
● Turn the ignition from OFF to ON.
Perform any of the following and the system will go to Arming preparation:
● Close all the doors, hood and luggage compartment door.
Arming preparation
Perform any of the following and the system will return to Disarmed state (B):
● Open any of the doors, the hood or the luggage compartment door.
Perform any of the following and the system will return to Disarmed state (A):
● Push the unlock switch on the wireless remote.
● Put the key in the lock on the driver's or the passenger door and turn it towards unlock.
● Put the key in the ignition.
● Reconnect the battery.
● Turn the ignition from OFF to ON.
Perform any of the following and the system will go to Armed state:
● Allow 30 seconds to elapse with all the doors, hood and luggage compartment door closed.
Armed state
Perform any of the following and the system will return to Disarmed state (A):
● Push the unlock switch on the wireless remote.
● Put the key in the lock on the driver's or the passenger door and turn it towards unlock.
● Put the key in the ignition and turn it ON.
● Run the engine at 550 rpm or faster for more than 10 seconds.
Perform any of the following and the system will go on to Alarm sounding:
● Open any of the doors and allow the entry delay time to pass.
● Open the hood.
● Open the luggage compartment door with something other than the key or wireless remote.
● Reconnect the battery.
Perform any of the following and the system will return to Disarmed state (B):
● Open the luggage compartment door with the wireless remote.
● Open the luggage compartment door with the Key.

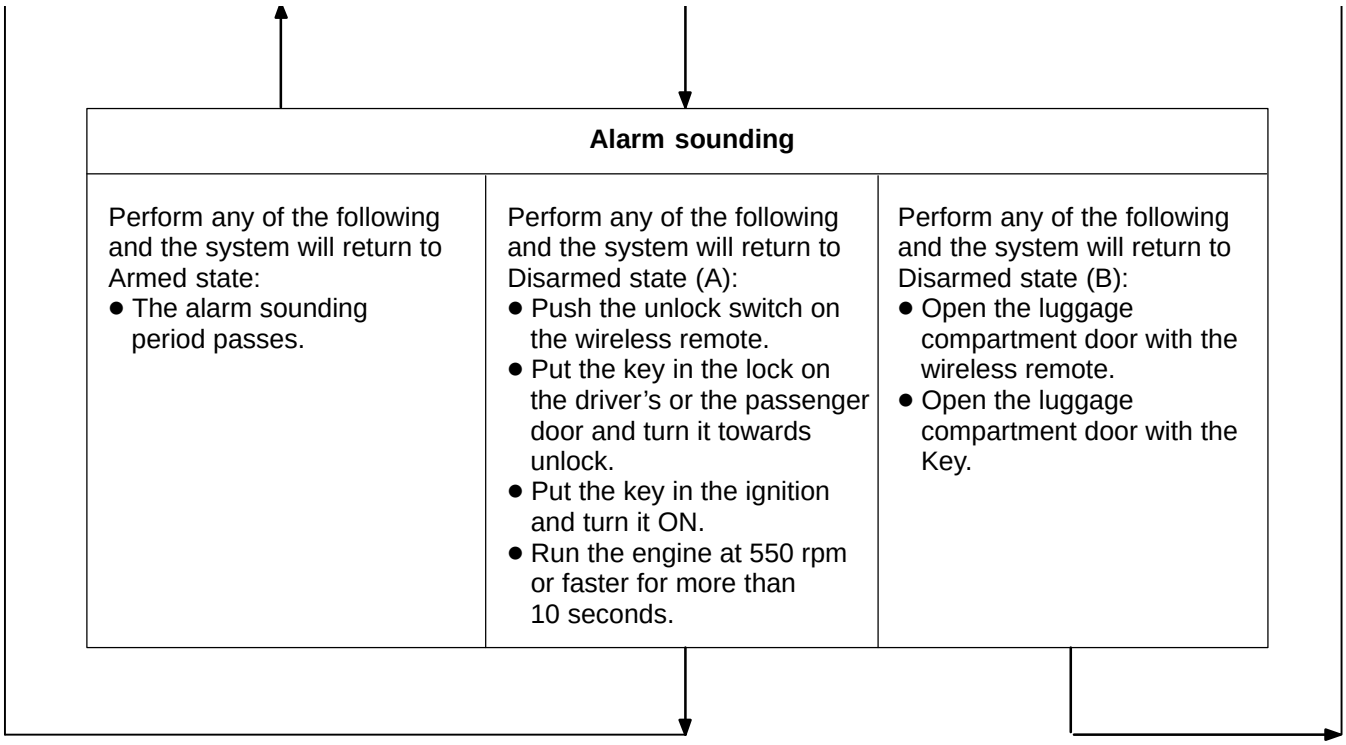
Alarm sounding
Perform any of the following and the system will return to Armed state:
● The alarm sounding period passes.
Perform any of the following and the system will return to Disarmed state (A):
● Push the unlock switch on the wireless remote.
● Put the key in the lock on the driver's or the passenger door and turn it towards unlock.
● Put the key in the ignition and turn it ON.
● Run the engine at 550 rpm or faster for more than 10 seconds.
Perform any of the following and the system will return to Disarmed state (B):
● Open the luggage compartment door with the wireless remote.
● Open the luggage compartment door with the Key.

HINT:
In arming condition either closed door is opened, entry delay occurs. (14 secs.)
During this time, the mode transfers to disarming condition when the condition described above * is met.
When the condition is not met, the system judges theft occurs, the mode transfers to alarming condition.

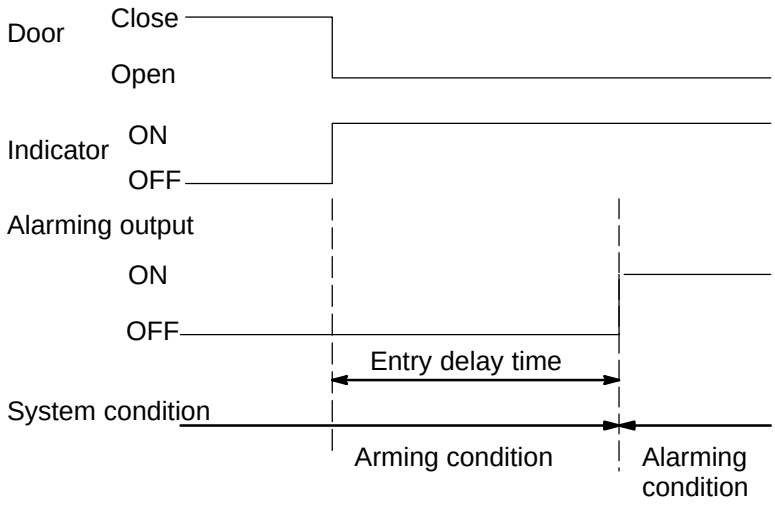

Indicator light output:

Condition	Indicator light
Disarming condition	OFF
Arming preparation condition	ON
Arming condition (Entry delay time)	OFF (ON)
Alarming condition	ON

HINT:
Even in disarming condition, the indicator light flash. (Due to the signal output form immobilizer system). The indicator always flashes receiving the signal from the immobilizer system at any time in the arming condition.

Flashing frequency:
0.2 seconds (ON)
1.8 seconds (OFF)

□ Transfer to active mode:
In each passive mode, when ”disarming condition of active mode → arming preparation transfer condition” is met, the active mode transfers to each condition. In this case, active mode continues till disarming condition.

Passive mode when transfer condition is met.	Active mode transfer condition
Disarming condition	Arming preparation condition
Arming preparation condition	Arming preparation condition
Arming condition (During entry delay time)	Arming condition (After alarming time has elapsed, arming condition)
Alarming condition	After alarming time has elapsed, arming condition

4. CHANGING METHOD OF PASSIVE MODE (ON or OFF)

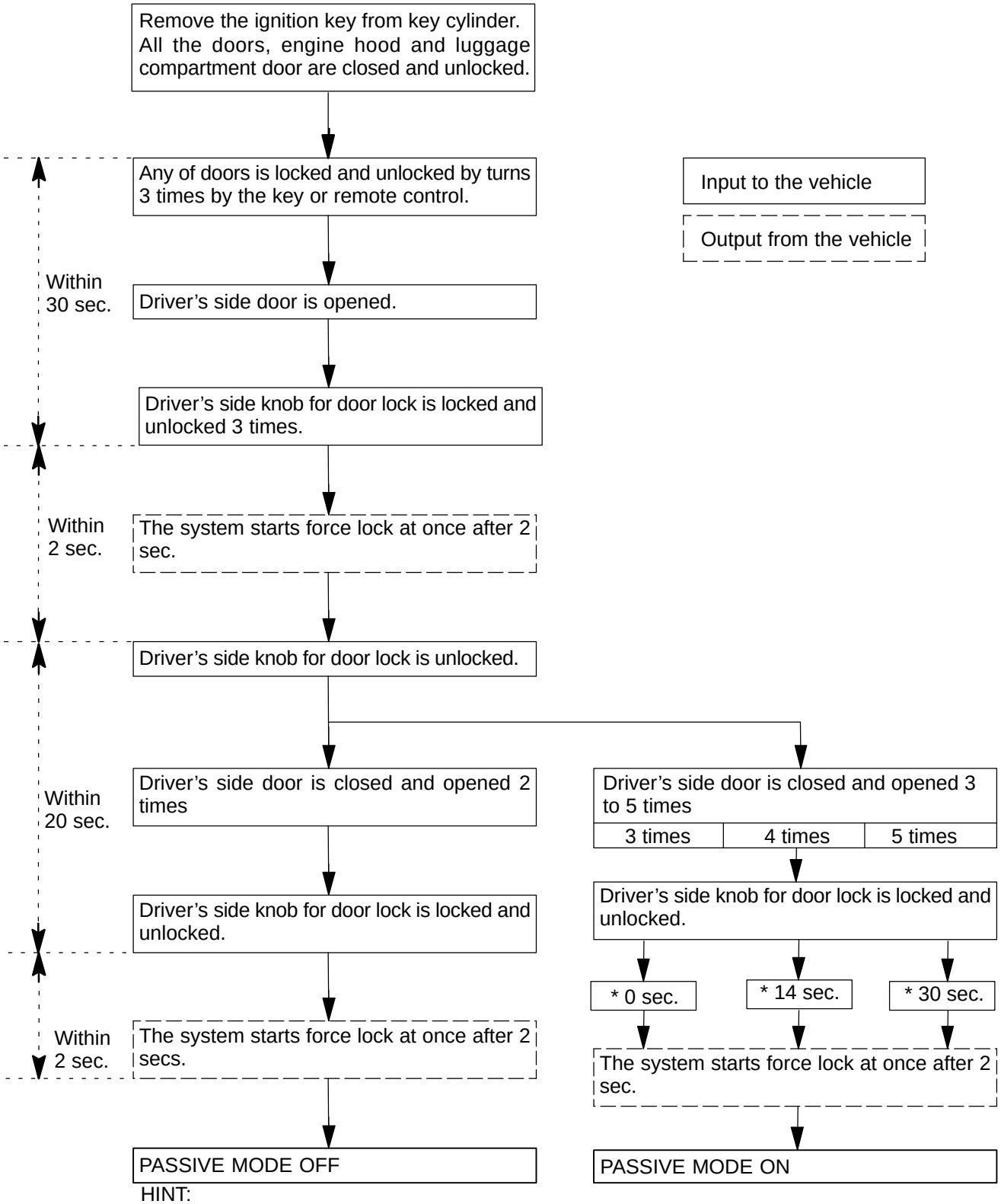

HINT:

- Initial mode is PASSIVE MODE OFF.
- If there is a different signal in the middle of changing. It is invalid.

*: Entry delay time

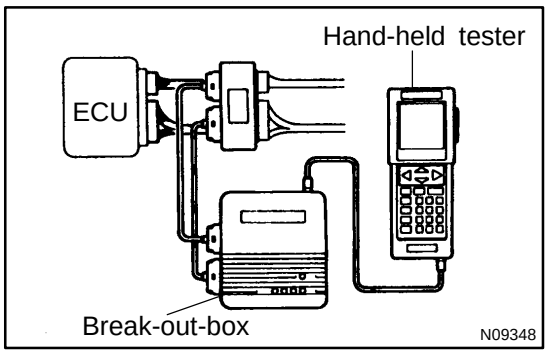

5. ECU TERMINAL VALUES MEASUREMENT BY USING BREAK-OUT-BOX AND HAND-HELD TESTER

(a) Hook up the break-out-box and hand-held tester to the vehicle.

(b) Read the ECU input/ output values by following the prompts on the tester screen.

HINT:

Hand-held tester has a ”Snapshot” function.

This records the measured values and is effective in the diagnosis of intermittent problems.

Please refer to the hand-held tester / break-out-box operator’s manual for further details.

DI01U-11

PROBLEM SYMPTOMS TABLE

Proceed to the reference page shown in the matrix chart below for each malfunction symptom and trouble-shoot for each circuit.

HINT:

Troubleshooting of the theft deterrent system is based on the premise that the door lock control system is operating normally. Accordingly, before troubleshooting the theft deterrent system, first make certain that the door lock control system is operating normally.

Symptom	Suspect Area	See page
The theft deterrent system cannot be set	1. Indicator light circuit 2. ECU power source circuit 3. Key unlock warning switch circuit 4. Luggage compartment door key lock and unlock switch circuit 5. Engine hood courtesy switch circuit	DI-532 DI-534 DI-542 DI-544
The indicator light does not blink when system is set.	Indicator light circuit	DI-532
When the system is set (The system does not operate when the rear door is unlocked).	Door unlock detection switch circuit	DI-686 DI-708 DI-643
When the system is set (The system does not operate when the luggage compartment door is opened by a method other than the key).	Luggage compartment door courtesy switch circuit	DI-647
When the system is set (The system does not operate when the engine hood is opened).	Engine hood courtesy switch circuit	DI-547
When the system is set (It is not canceled when the ignition key is turned to ACC or ON position (Except Europe Models)).	Ignition switch circuit	DI-540
When the system is set (It still operates when the luggage compartment door is opened with the key (Except Europe Models)).	Luggage compartment door key lock and unlock switch circuit	DI-544
While the system is in warning operation (Horns do not sound).	Horn relay circuit	DI-672
While the system is in warning operation (Headlights do not flash).	Headlight control relay circuit	DI-635
While the system is in warning operation (Taillights do not flash).	Taillight control relay circuit	DI-633
While the system is in warning operation (The door lock is not locked).	Door unlock detection switch circuit	DI-686 DI-708 DI-643
System is still set even when a rear door is open	Door courtesy switch circuit	DI-639
Even when the system is not set (Horns sound).	Horn relay circuit	DI-672
Even when the system is not set (Headlights stay on).	Headlight control relay circuit	DI-635
Even when the system is not set (Taillights stay on).	Taillight control relay circuit	DI-633

DI1AH-13

TERMINALS OF ECU

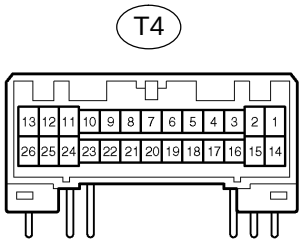

N

I11580

Symbols (Terminals No.)	Wiring Color	Condition	STD Value
DSWH ↔ E (T4-6 ↔ T4-12)	B ↔ W-B	Engine hood courtesy switch "ON" (Engine hood opened)	Below 1 Ω
		Engine hood courtesy switch "OFF" (Engine hood closed)	1 MΩ or higher
KSW ↔ E (T4-4 ↔ T4-12)	R-Y ↔ W-B	Key unlock warning switch "ON" (Key inserted)	Below 1 Ω
		Key unlock warning switch "OFF" (Key removed)	1 MΩ or higher
LGU ↔ E (T4-3 ↔ T4-12)	G-W ↔ W-B	Luggage compartment door key lock and unlock switch "ON"	Below 1 Ω
		Luggage compartment door key lock and unlock switch "OFF"	1 MΩ or higher
+B1 ↔ Body ground (T4-2 ↔ Body ground)	W-G ↔ W-B	Always	10 - 14 V
IG ↔ E (T4-14 ↔ T4-12)	Y-R ↔ W-B	Ignition switch is turned to "ON" position	10 - 14 V
+B2 ↔ Body ground (T4-1 ↔ Body ground)	L-R ↔ Body ground	Always	10 - 14 V
IND ↔ E (T4-12 ↔ T4-12)	V-W ↔ W-B	During set preparation	3 - 5 V
E ↔ Body ground (T4-12 ↔ Body ground)	W-B ↔ Body ground	Always	10 - 14 V
SH ↔ SH- (T4-24 ↔ T4-25)	B-R ↔ W	Always	10 - 14 V
MPX1 ↔ Body ground (T4-10 ↔ Body ground)	V ↔ Body ground	Multiplex communication circuit	-

EMISSION CONTROL SYSTEM

EC01H-03

PURPOSE

The emission control systems are installed to reduce the amount of CO, HC and NOx exhausted from the engine ((3) (4) and (5)), to prevent the atmospheric release of blow-by gas-containing HC (1) and evaporated fuel containing HC being released from the fuel tank (2).
The function of each system is shown in these table.

System	Abbreviation	Function
(1) Positive Crankcase Ventilation	PCV	Reduces HC
(2) Evaporative Emission Control	EVAP	Reduces evaporated HC
(3) Warm Up Three-Way Catalytic Converter	WU-TWC	Reduces HC, CO and NOx
(4) Three-Way Catalytic Converter	TWC	Reduces HC, CO and NOx
(5) Sequential Multiport Fuel injection*	SFI	Injects a precisely timed, optimum amount of fuel for reduced exhaust emissions

Remark: * For inspection and repair of the SFI system, refer to the SF section of this manual.

EVAPORATIVE EMISSION (EVAP) CONTROL SYSTEM

COMPONENTS

EC0BF-02

Charcoal Canister

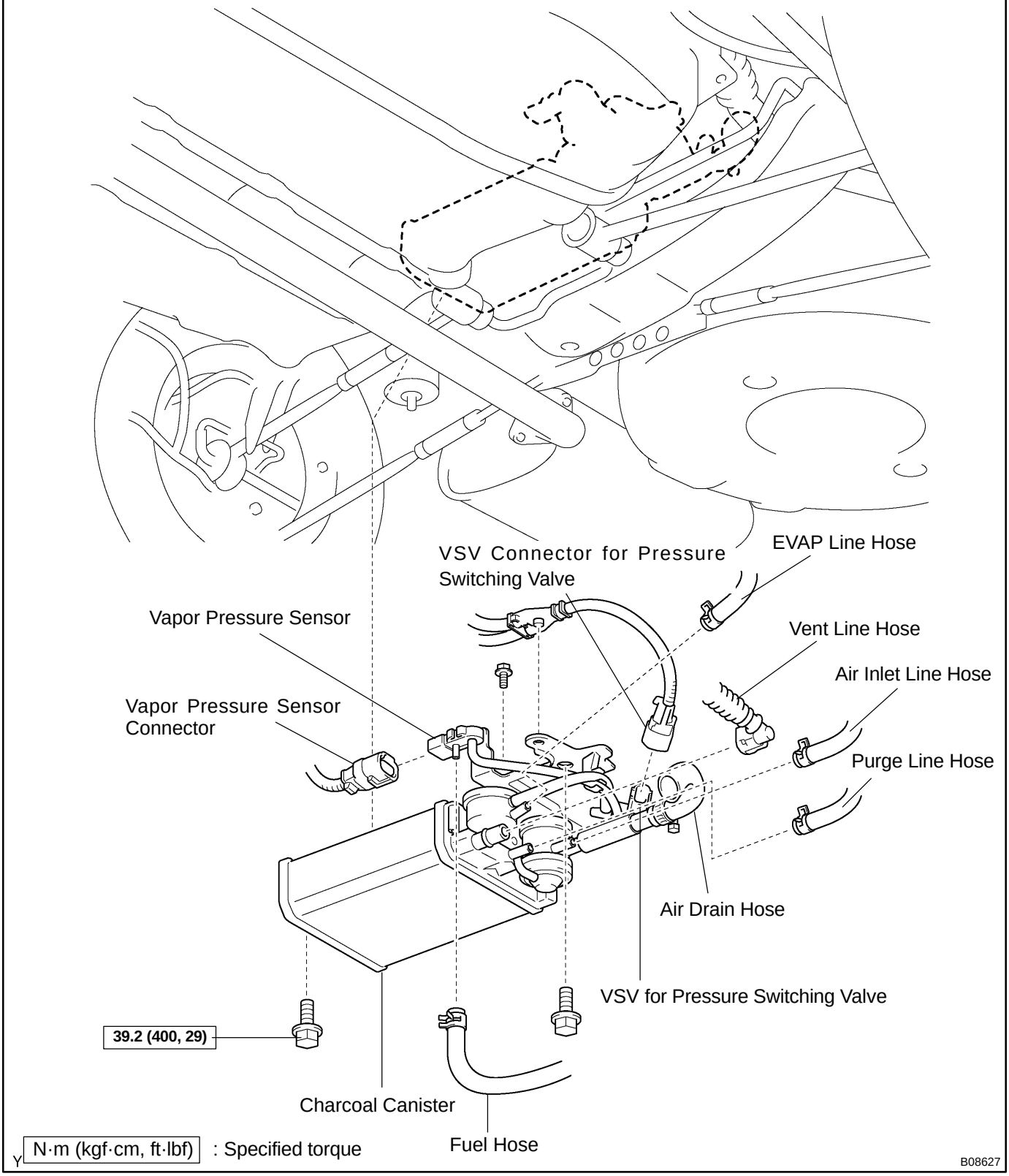

EC0B4-03

INSPECTION

1. VISUALLY INSPECT LINES AND CONNECTORS

Visually check for loose connections, sharp bends or damage.

2. VISUALLY INSPECT FUEL TANK FILLER PIPE

Visually check for deformation, cracks or fuel leakage.

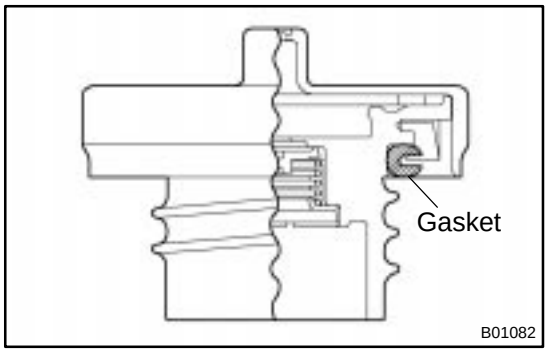

3. INSPECT FUEL TANK CAP

Visually check if the cap and/or gasket are deformed or damaged.

If necessary, repair or replace the cap.

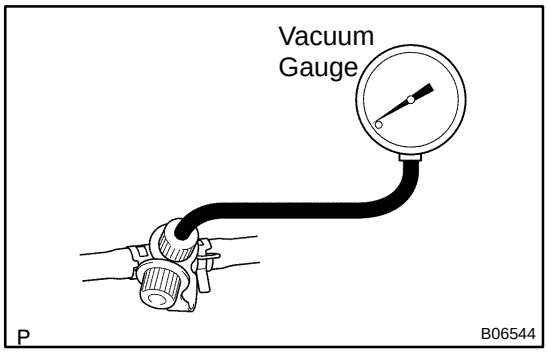

4. INSPECT EVAP SYSTEM LINE

(a) Warm up the engine and stop the engine.
Allow the engine to warm up to normal operating temperature.

(b) Install a vacuum gauge (EVAP control system test equipment vacuum gauge) to the EVAP service port on the purge line.

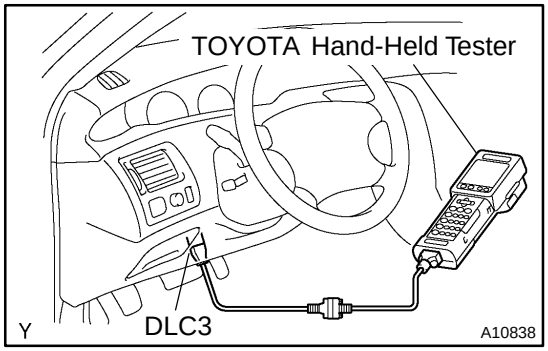

(c) TOYOTA Hand-Held Tester:
Forced driving of the VSV for the EVAP.
(1) Connect a TOYOTA hand-held tester to the DLC3.
(2) Start the engine.
(3) Push the TOYOTA hand-held tester main switch ON.
(4) Use the ACTIVE TEST mode on the TOYOTA hand-held tester to operate the VSV for the EVAP.

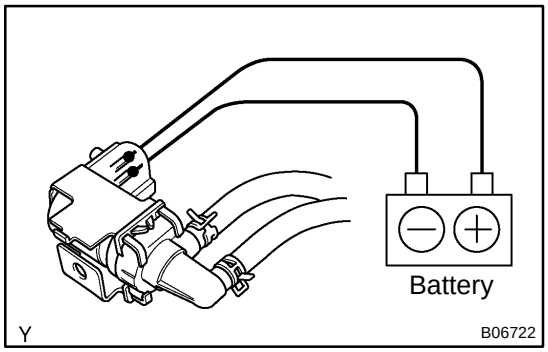

(d) If you have no TOYOTA Hand-Held Tester:
Forced driving of the VSV for the EVAP.
(1) Disconnect the VSV connector for the EVAP.
(2) Connect the positive (+) and negative (-) leads from the battery to the VSV terminals for the EVAP.
(3) Start the engine.

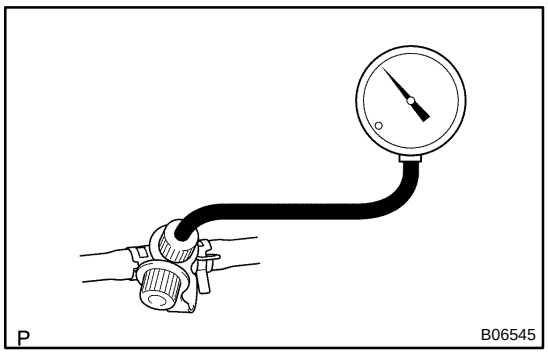

(e) Check the vacuum at idle.
Vacuum:
Maintain at 0.368 - 19.713 in.Hg (5 - 268 in.Aq) for over 5 seconds

HINT:
If the vacuum does not change, you can conclude that the hose connecting the VSV to the service port has come loose or is blocked, or the VSV is malfunctioning.

(f) TOYOTA Hand-Held Tester:
Conclude forced driving of the VSV for the EVAP.
(1) Stop the engine.
(2) Disconnect the TOYOTA hand-held tester from the DLC3.

(g) If you have no TOYOTA Hand-Held Tester:
Conclude forced driving of the VSV for the EVAP.
(1) Stop the engine.
(2) Disconnect the positive (+) and negative (-) leads from the battery from the VSV terminals for the EVAP.
(3) Connect the VSV connector for the EVAP.

(h) Disconnect the vacuum gauge from the EVAP service port on the purge line.

(i) Connect a pressure gauge to the EVAP service port on the purge line.

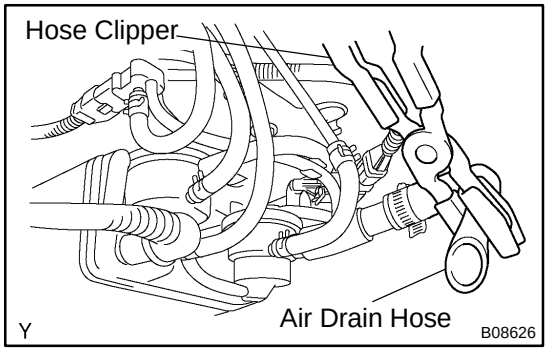

(j) Check the pressure.
(1) Close off the air drain hose at the marked position of the canister with a hose clipper or similar instrument.

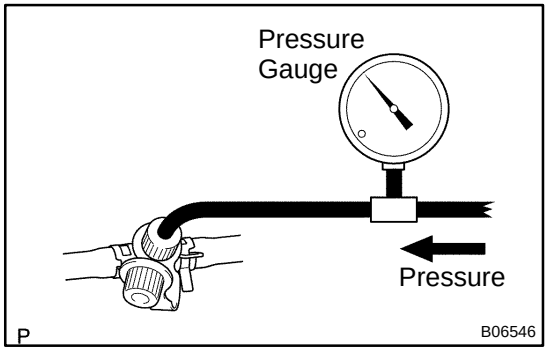

(2) Add the pressure (13.5 - 15.5 in.Aq) from the EVAP service port.
Pressure:
2 minutes after the pressure is added, the gauge should be over 7.7 - 8.8 in.Aq.

HINT:
If you can't add pressure, you can conclude that the hose connecting the VSV～canister～fuel tank has slipped off or the VSV is open.

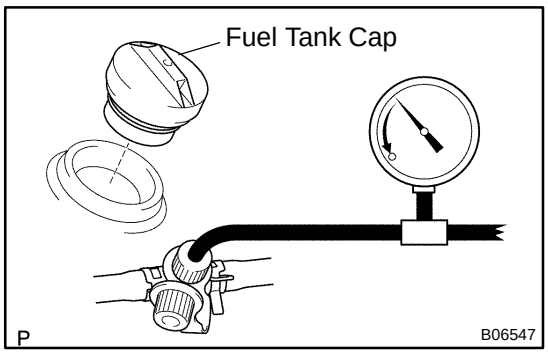

(3) Check if the pressure decreases when the fuel tank cap is removed while adding pressure.

HINT:

If the pressure does not decrease when the filler cap is removed, then you can conclude that the hose connecting the service port to the fuel tank is blocked, etc.

(k) Disconnect the pressure gauge from the EVAP service port on the purge line.

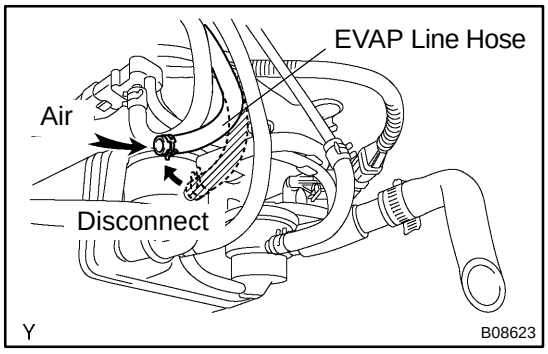

5. CHECK AIRTIGHTNESS IN FUEL TANK AND FILLER PIPE

(a) Disconnect the EVAP line hose from the charcoal canister side and then pressurize and make the internal pressure in the fuel tank 4 kPa (41 gf/cm^2, 0.58 psi).

(b) Check that the internal pressure of the fuel tank can be hold for 1 minute.

(c) Check the connected portions of each hose and pipe.

(d) Check the installed parts on the fuel tank.

If there is no abnormality, replace the fuel tank and filler pipe.

(e) Reconnect the EVAP line hose to the charcoal canister.

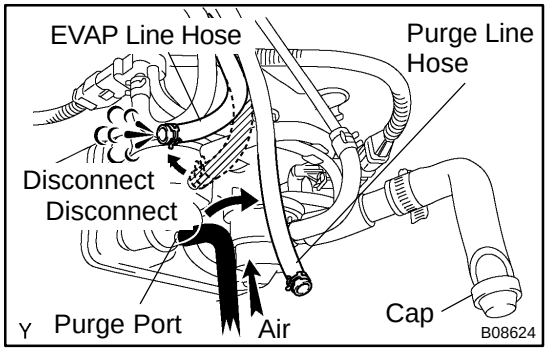

6. INSPECT FUEL CUTOFF VALVE AND FILL CHECK VALVE

(a) Disconnect the purge line hose and EVAP line hose from the charcoal canister.

(b) Plug the cap to the air drain hose.

(c) Pressurize 4 kPa (41 gf/cm^2, 0.58 psi) to the purge port and check that there is ventilation through the EVAP line hose.

HINT:

In the condition that the fuel fuel is full, as the float value of the fill check valve is closed and has no ventilation, it is necessary to check the fuel amount (volume).

(d) Check if there is any struck in the vent line hose and EVAP line hose.

If there is no stuck in hoses, replace the fuel cutoff valve and fill check valve.

(e) Reconnect the purge line hose and EVAP line hose to the charcoal canister.

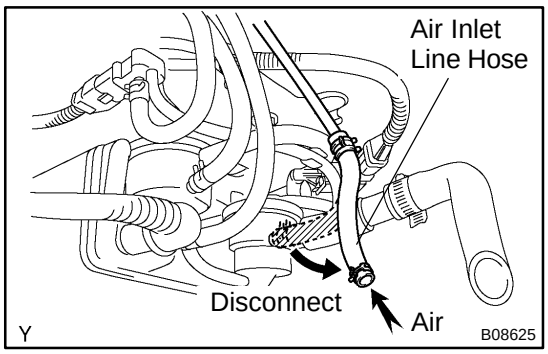

7. CHECK AIR INLET LINE

(a) Disconnect the air inlet line hose from the charcoal canister.

(b) Check that there is ventilation in the air inlet line.

(c) Reconnect the air inlet line hose to the charcoal canister.

8. REMOVE CHARCOAL CANISTER ASSEMBLY

(a) Disconnect the VSV connector for the pressure switching valve.

(b) Disconnect the vapor pressure sensor connector.

(c) Disconnect the fuel hose from the vapor pressure sensor.

(d) Disconnect the purge line hose, EVAP line hose and air inlet line hose from the charcoal canister.

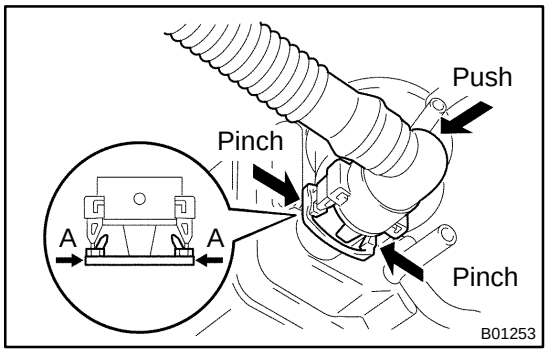

(e) Disconnect the vent line hose from the charcoal canister.
   (1) Push the connector deep inside.
   (2) Pinch portion A.
   (3) Pull out the connector.

(f) Remove the 2 charcoal canister mounting bolts.

(g) Remove the vapor pressure sensor mounting bolt.

(h) Remove the charcoal canister assembly.

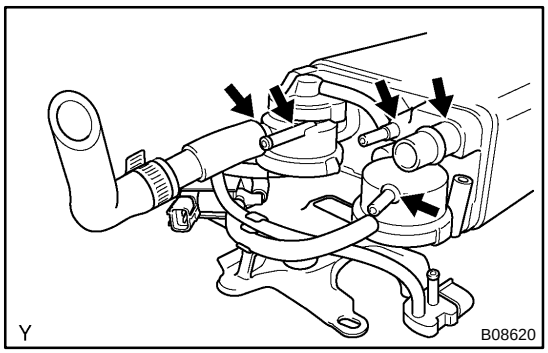

9. INSPECT CHARCOAL CANISTER

(a) Visually check the charcoal canister for cracks or damage.

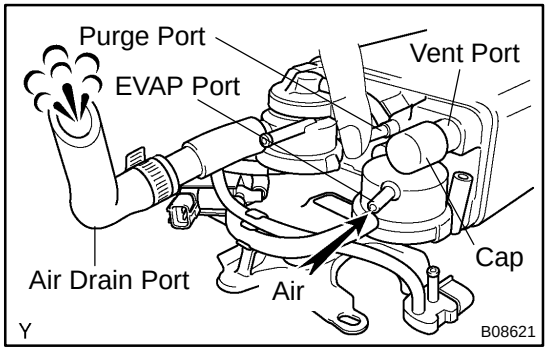

(b) Inspect the charcoal canister operation.
   (1) Plug the vent port with the cap.
   (2) While holding the purge port closed, blow air (1.76 kPa, 18 gf/cm^2, 0.26 psi) into the EVAP port and check that air flows from the air drain port.

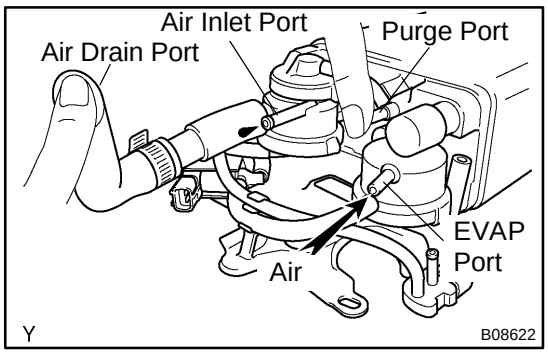

(3) While holding the purge port and the air drain port closed, blow air (1.76 kPa, 18 gf/cm^2, 0.26 psi) into the EVAP port and check that air does not flow from the air inlet port.

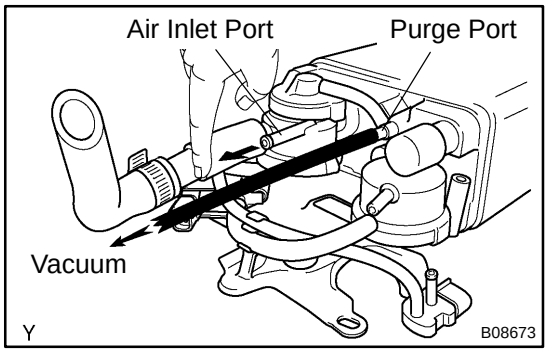

(4) Apply vacuum (3.43 kPa, 25.7 mmHg, 1.01 in.Hg) to the purge port, check that the vacuum does not decrease when the air inlet port is closed, and check that the vacuum decreases when the air inlet port is released.

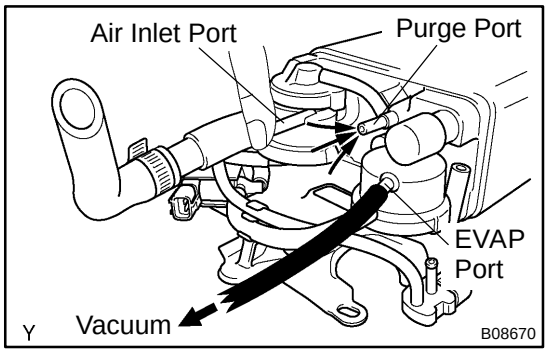

(5) While holding the air inlet port closed, apply vacuum (3.43 kPa, 25.7 mmHg, 1.01 in.Hg) to the EVAP port and check that air flows into the purge port.

If operation is not as specified, replace the charcoal canister.

(6) Remove the hose and cap from vent port.

10. INSPECT VSV FOR EVAP (See page SF-65)

11. INSPECT VSV FOR CANISTER CLOSED VALVE (CCV) (See page SF-70)

12. INSPECT VSV FOR PRESSURE SWITCHING VALVE (See page SF-72)

13. INSPECT VAPOR PRESSURE SENSOR (See page SF-75)

14. REINSTALL CHARCOAL CANISTER ASSEMBLY

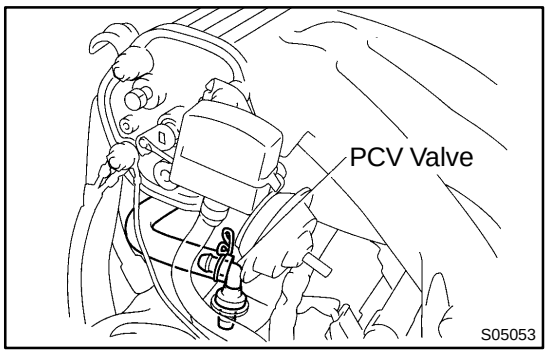

POSITIVE CRANKCASE VENTILATION (PCV) SYSTEM

EC04N-02

INSPECTION

1. INSPECT PCV VALVE

(a) Remove the PCV valve.

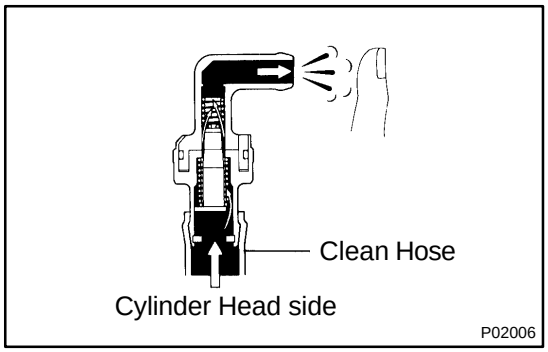

(b) Install clean hose to the PCV valve.

(c) Inspect the PCV valve operation.

(1) Blow air into the cylinder head side, and check that air passes through easily.

CAUTION:
Do not suck air through the valve.
Petroleum substances inside the valve are harmful.

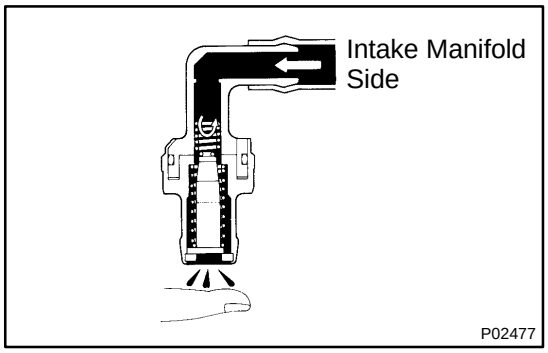

(2) Blow air into the intake manifold side, and check that air passes through with difficulty.

If operation is not as specified, replace the PCV valve.

(d) Remove clean hose from the PCV valve.

(e) Reinstall the PCV valve.

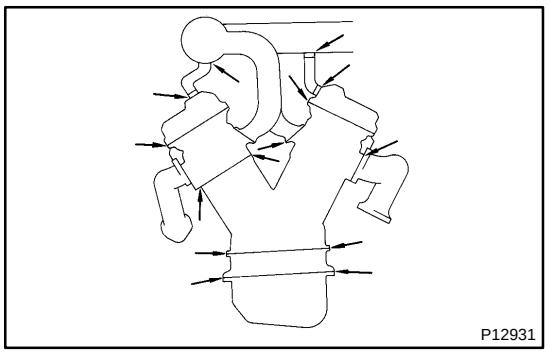

2. VISUALLY INSPECT HOSES, CONNECTIONS AND GASKETS

Check for cracks, leaks or damage.

EC01J-03

DRAWING

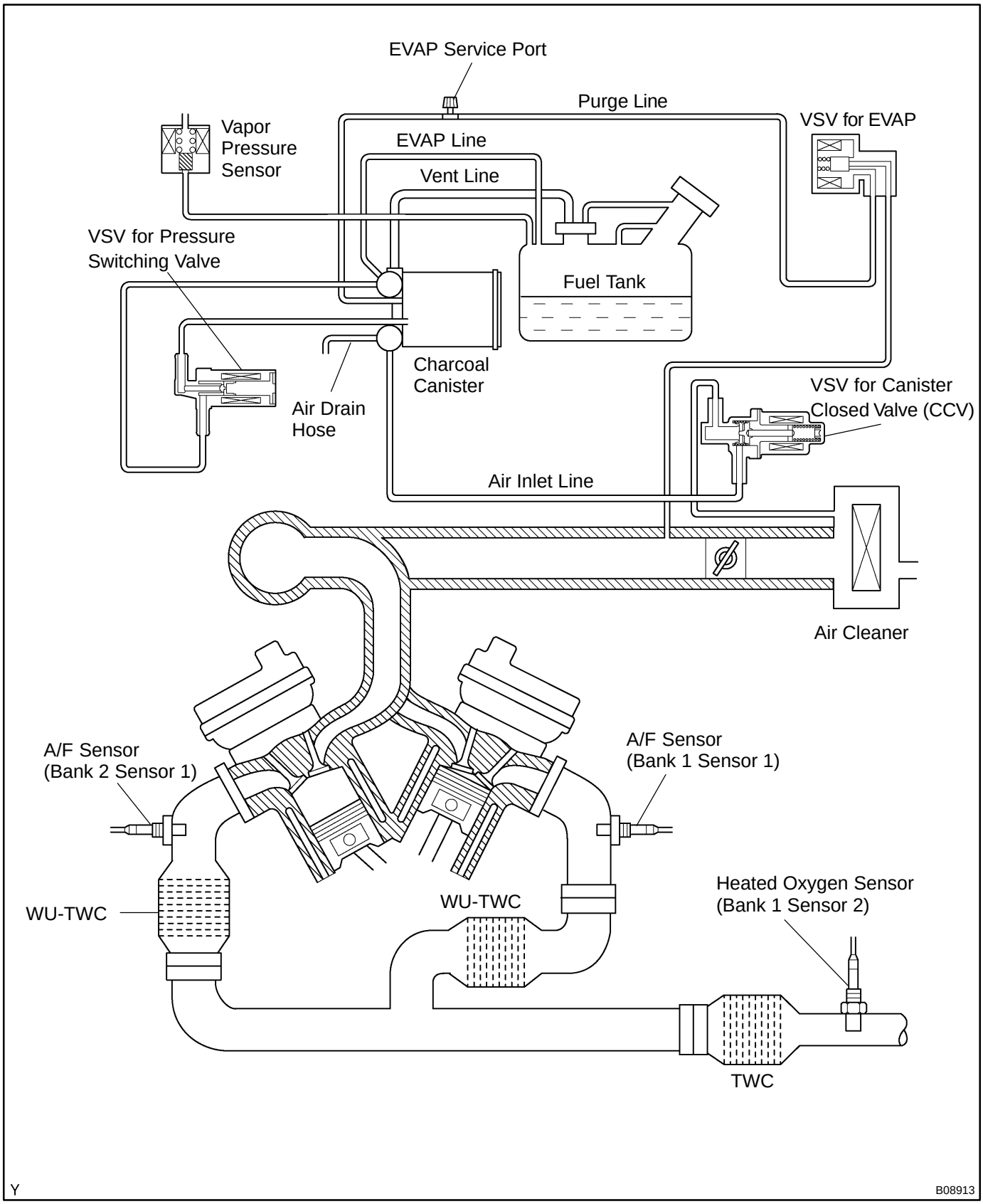

PARTS LAYOUT AND SCHEMATIC DRAWING

EC04L-03

LOCATION

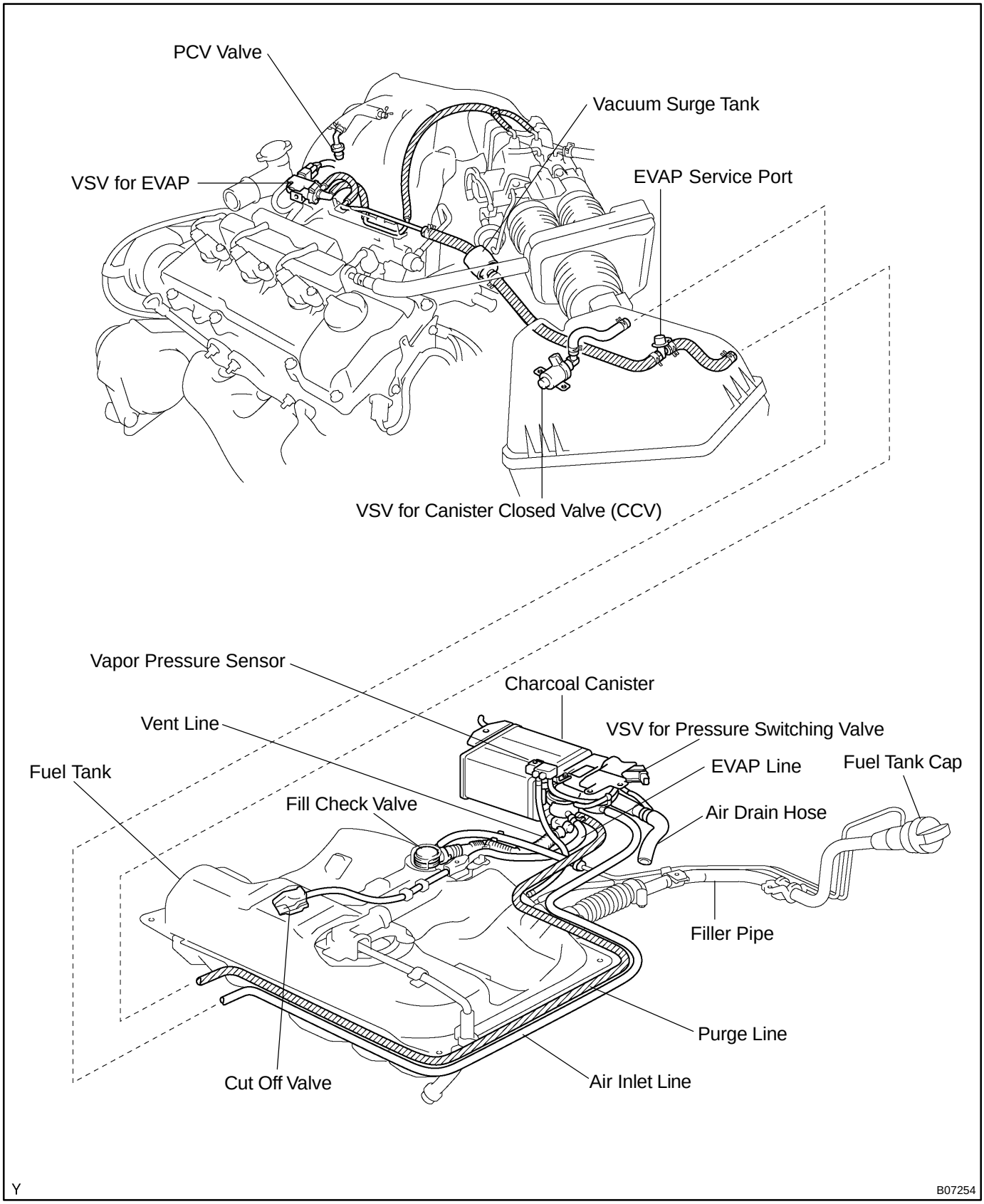

EC04T-03

COMPONENTS

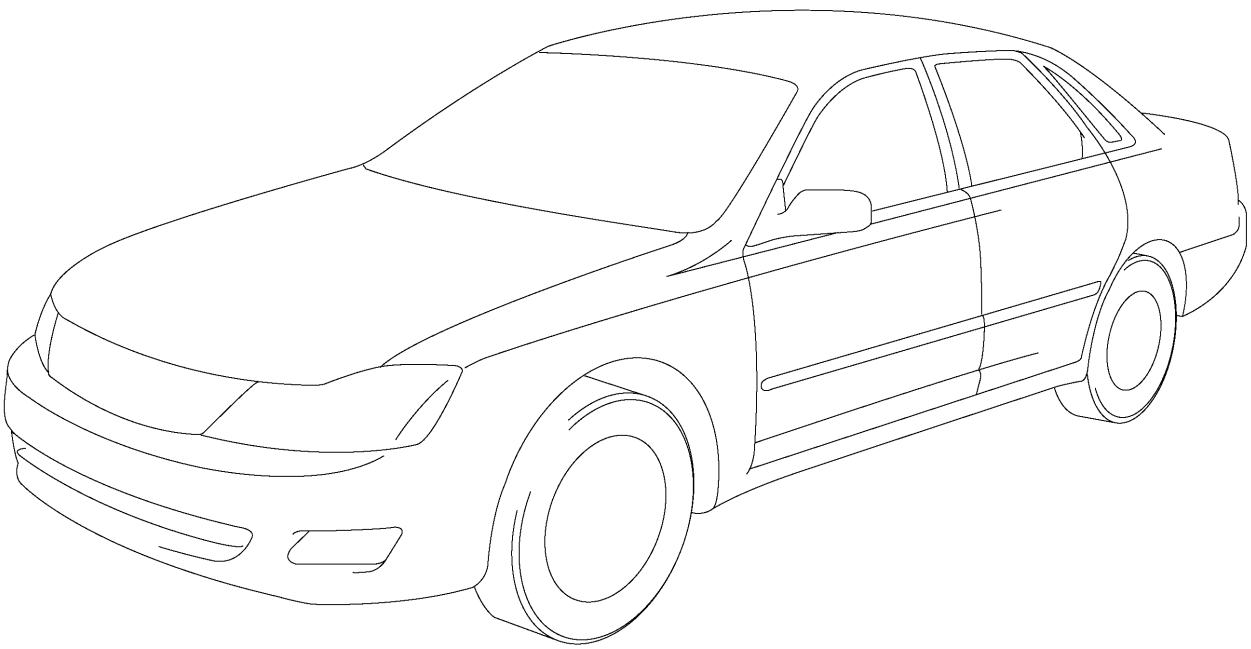

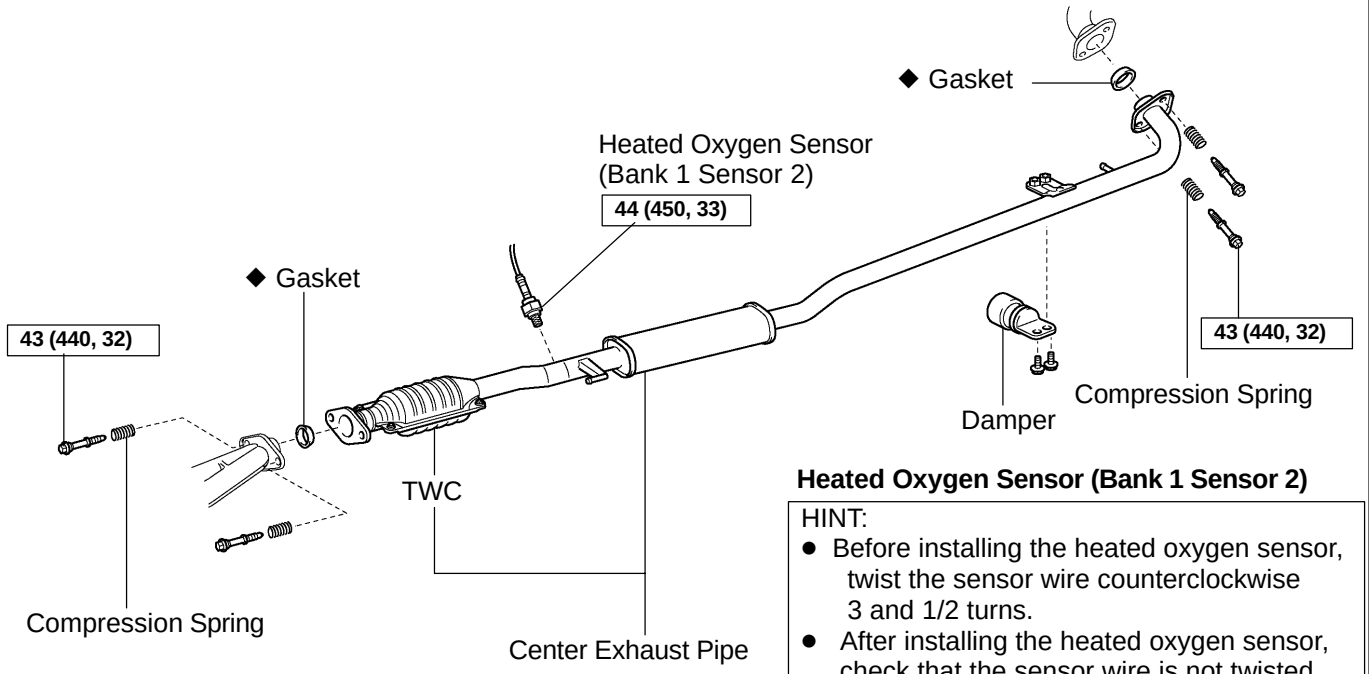

Heated Oxygen Sensor (Bank 1 Sensor 2)

HINT:
- Before installing the heated oxygen sensor, twist the sensor wire counterclockwise 3 and 1/2 turns.
- After installing the heated oxygen sensor, check that the sensor wire is not twisted, if it is twisted, remove the heated oxygen sensor and reinstall it.

N·m (kgf·cm, ft·lbf) : Specified torque
◆ Non-reusable part

B07459

THREE-WAY CATALYTIC CONVERTER (TWC) SYSTEM

EC04S-01

ON-VEHICLE INSPECTION

1. INSPECT EXHAUST PIPE ASSEMBLY

(a) Check the connections for looseness or damage.

(b) Check the clamps for weakness, cracks or damage.

2. INSPECT TWC

Check for dents or damage.

If any part of the protector is damaged or dented to the extent that it contacts the TWC, repair or replace it.

3. INSPECT TWC HEAT INSULATOR

(a) Check the heat insulator for damage.

(b) Check for adequate clearance between the catalytic converter and heat insulator.

EC0BI-02

COMPONENTS

WU-TWC for Bank 1

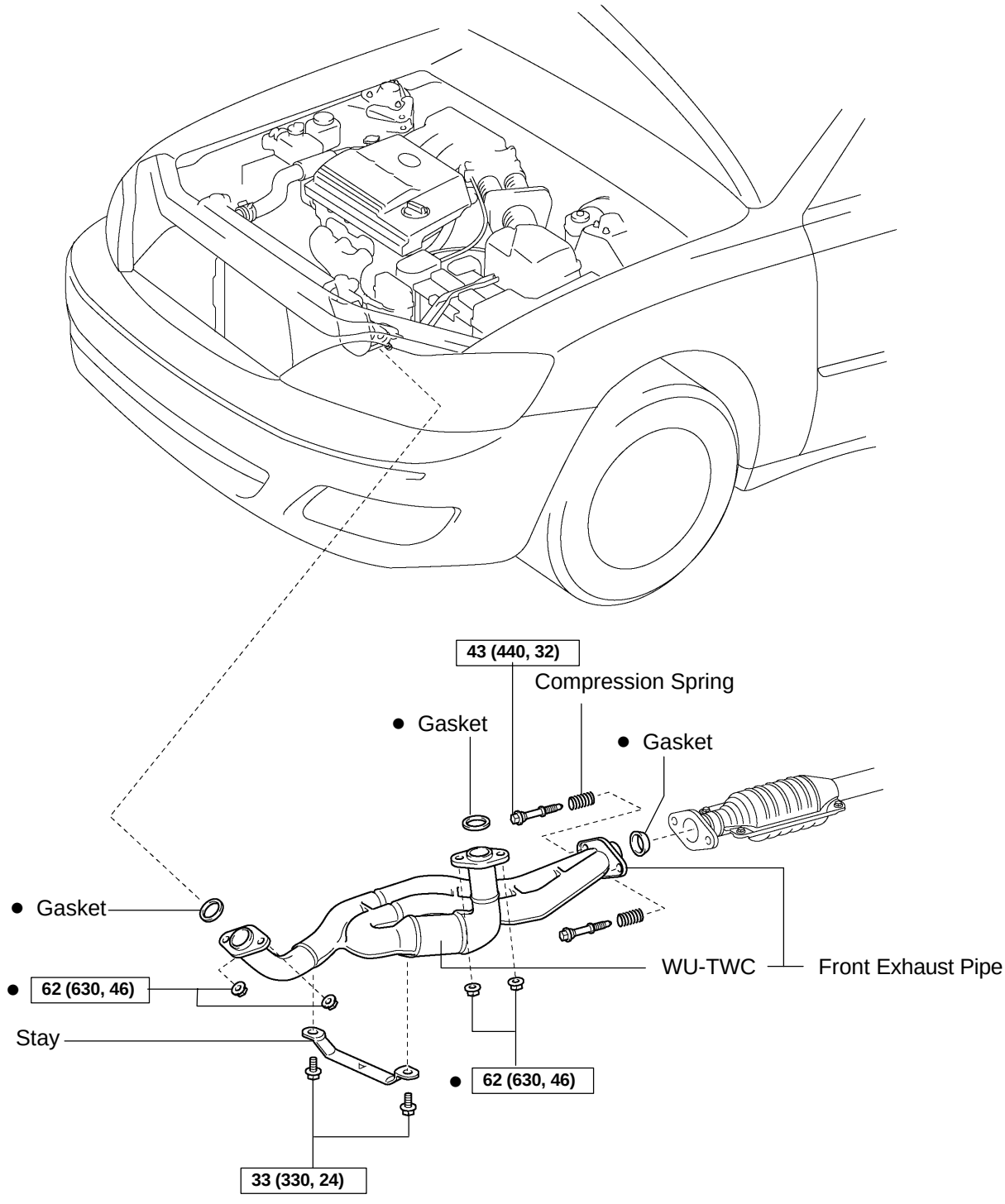

N·m (kgf·cm, ft·lbf) : Specified torque

Y● Non-reusable part

B07452

WU-TWC for Bank 2

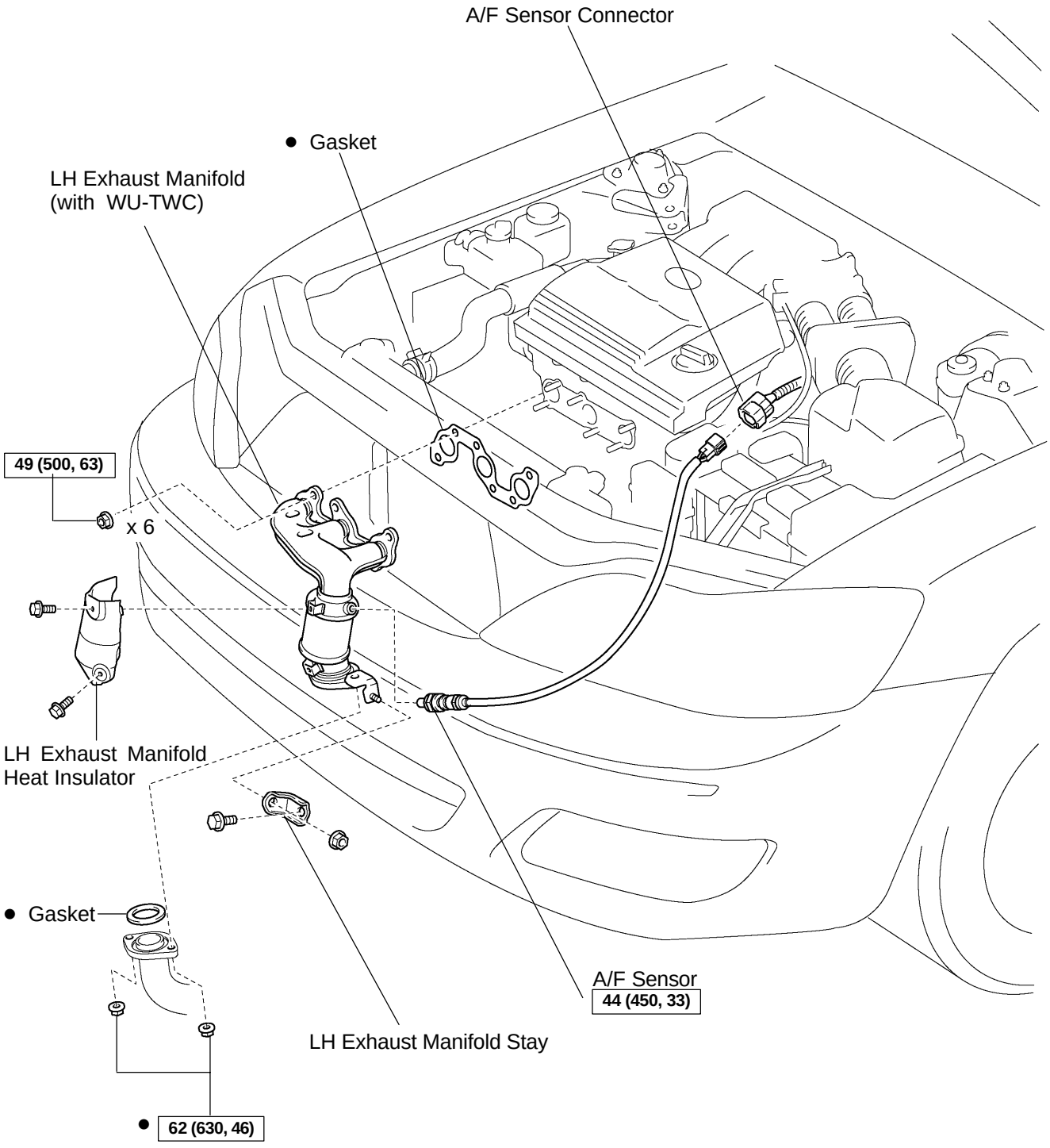

N·m (kgf·cm, ft·lbf) : Specified torque

Y ● Non-reusable part

B07458

WARM UP THREE-WAY CATALYTIC CONVERTER (WU-TWC) SYSTEM

EC0BH-01

ON-VEHICLE INSPECTION

1. INSPECT EXHAUST PIPE ASSEMBLY

(a) Check the connections for looseness or damage.

(b) Check the clamps for weakness, cracks or damage.

2. INSPECT WU-TWC

Check for dents or damage.

If any part of the protector is damaged or dented to the extent that it contacts the WU-TWC, repair or replace it.

3. INSPECT WU-TWC HEAT INSULATOR

(a) Check the heat insulator for damage.

(b) Check for adequate clearance between the catalytic converter and heat insulator.

CO/HC

EM0CB-03

INSPECTION

HINT:

This check is used only to determine whether or not the idle CO/HC complies with regulations.

1. INITIAL CONDITIONS

(a) Engine at normal operating temperature
(b) Air cleaner installed
(c) All pipes and hoses of air induction system connected
(d) All accessories switched OFF
(e) All vacuum lines properly connected
(f) SFI system wiring connectors fully plugged
(g) Ignition timing check correctly
(h) Transmission in neutral position
(i) Tachometer and CO/HC meter calibrated by hand

2. START ENGINE

3. RACE ENGINE AT 2,500 RPM FOR APPROX. 180 SECONDS

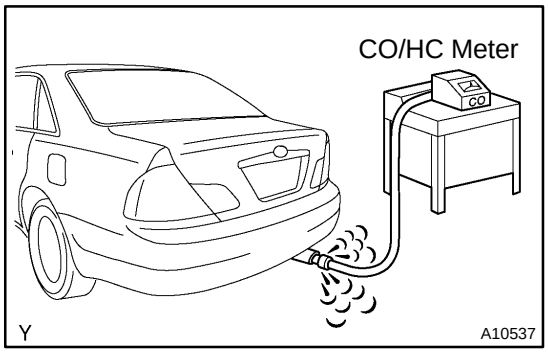

4. INSERT CO/HC METER TESTING PROBE AT LEAST 40 cm (1.3 ft) INTO TAILPIPE DURING IDLING

5. IMMEDIATELY CHECK CO/HC CONCENTRATION AT IDLE AND/OR 2,500 RPM

HINT:

When doing the 2 mode (2,500 rpm and idle) test, follow the measurement order prescribed by the applicable local regulations.

If the CO/HC concentration does not comply with regulations, troubleshoot in the order given below.
See the table below for possible causes, and then inspect and correct the applicable causes if necessary.

CO	HC	Problems	Causes
Normal	High	Rough idle	3. Faulty ignitions: ●Incorrect timing ●Fouled, shorted or improperly gapped plugs 4. Incorrect valve clearance 5. Leaky intake and exhaust valves 6. Leaky cylinders
Low	High	Rough idle (Fluctuating HC reading)	1. Vacuum leaks: ●PCV hoses ●Intake manifold ●Air intake chamber ●Throttle Body ●IAC valve ●Brake booster line 2. Lean mixture causing misfire
High	High	Rough idle (Black smoke from exhaust)	1. Restricted air filter 2. Plugged PCV valve 3. Faulty SFI systems: ●Faulty pressure regulator ●Defective ECT sensor ●Faulty ECM ●Faulty injectors ●Faulty throttle position sensor ●Faulty MAF meter

COMPRESSION

EM0CC-03

INSPECTION

HINT:

If there is lack of power, excessive oil consumption or poor fuel economy, measure the compression pressure.

1. WARM UP AND STOP ENGINE

Allow the engine to warm up to normal operating temperature.

2. REMOVE IGNITION COILS (See page IG-5)

3. REMOVE SPARK PLUGS

Using a 16 mm plug wrench, remove the 6 spark plugs.

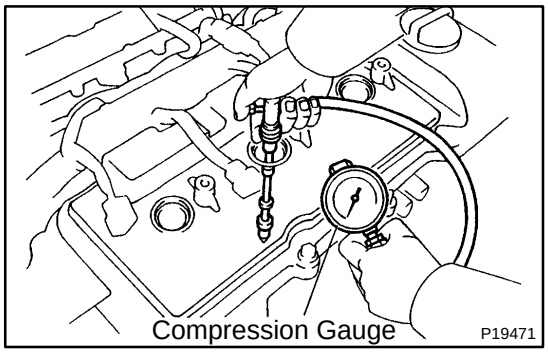

4. CHECK CYLINDER COMPRESSION PRESSURE

(a) Insert a compression gauge into the spark plug hole.

(b) Fully open the throttle.

(c) While cranking the engine, measure the compression pressure.

HINT:

Always use a fully charged battery to obtain engine speed of 250 rpm or more.

(d) Repeat steps (a) through (c) for each cylinder.

NOTICE:

This measurement must be done in as short a time as possible.

Compression pressure:
1,500 kPa (15.3 kgf/cm^2, 218 psi)
Minimum pressure:
1,000 kPa (10.2 kgf/cm^2, 145 psi)
Difference between each cylinder:
100 kPa (1.0 kgf/cm^2, 15 psi) or less

(e) If the cylinder compression in 1 or more cylinders is low, pour a small amount of engine oil into the cylinder through the spark plug hole and repeat steps (a) through (c) for cylinders with low compression.

- If adding oil helps the compression, it is likely that the piston rings and/or cylinder bore are worn or damaged.
- If pressure stays low, a valve may be sticking or seating is improper, or there may be leakage past the gasket.

5. REINSTALL SPARK PLUGS

6. INSTALL IGNITION COILS (See page IG-5)

CYLINDER BLOCK

COMPONENTS

EM04B-04

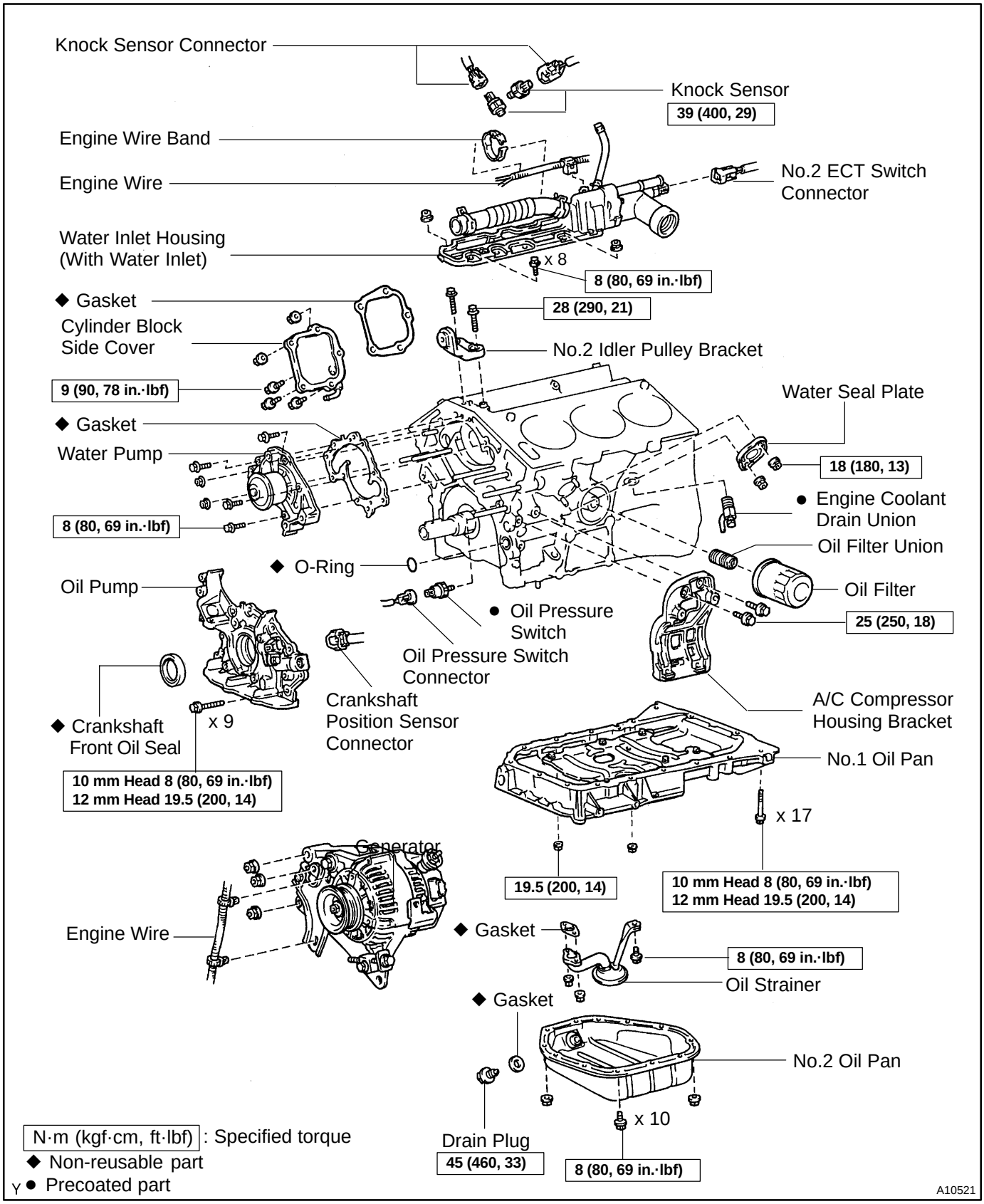

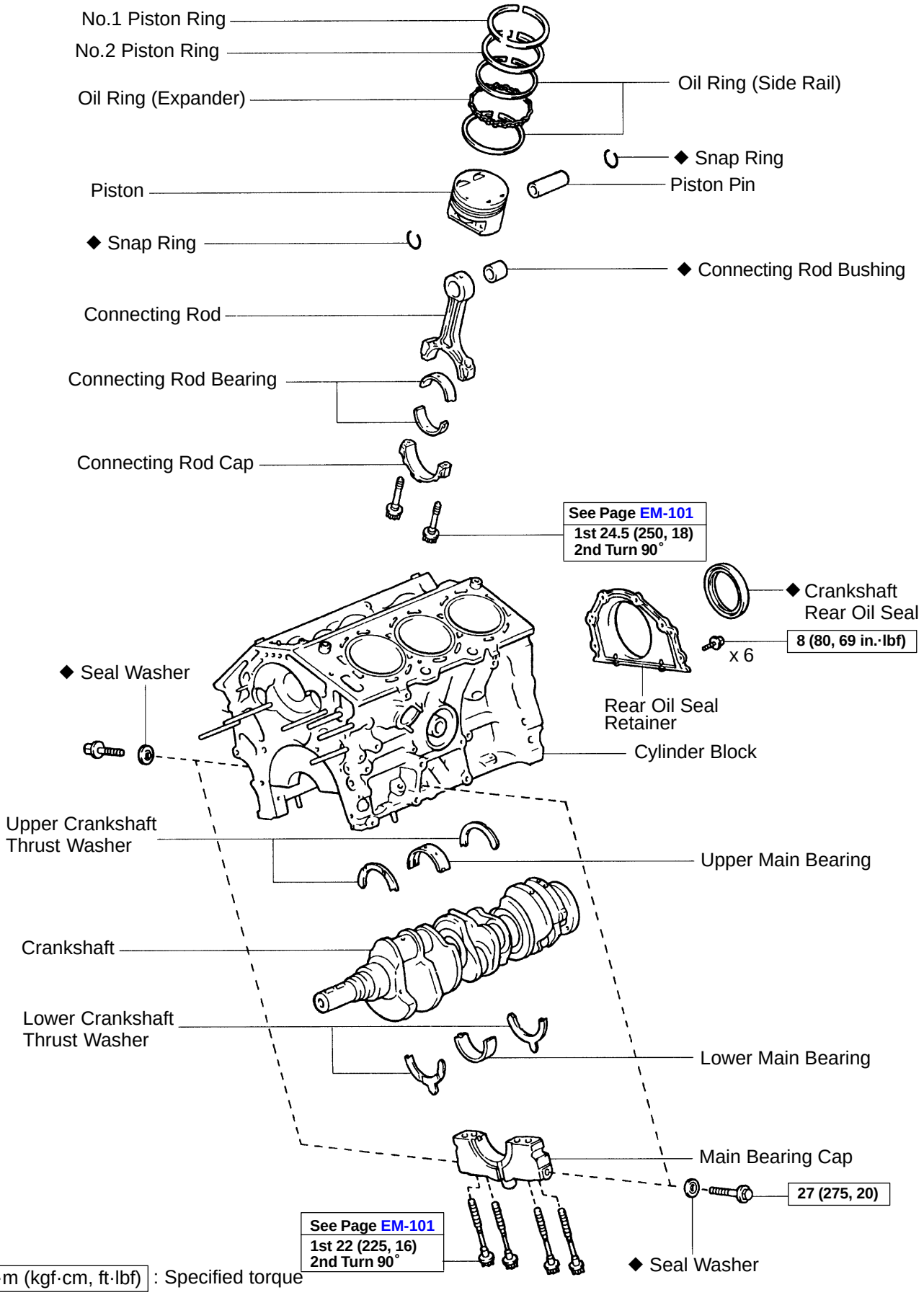
No.1 Piston Ring
No.2 Piston Ring
Oil Ring (Expander)
Oil Ring (Side Rail)
◆ Snap Ring
Piston
Piston Pin
◆ Snap Ring
◆ Connecting Rod Bushing
Connecting Rod
Connecting Rod Bearing
Connecting Rod Cap
See Page EM-101
1st 24.5 (250, 18)
2nd Turn 90°
◆ Crankshaft Rear Oil Seal
8 (80, 69 in.·lbf)
x 6
◆ Seal Washer
Rear Oil Seal Retainer
Cylinder Block
Upper Crankshaft Thrust Washer
Upper Main Bearing
Crankshaft
Lower Crankshaft Thrust Washer
Lower Main Bearing
Main Bearing Cap
27 (275, 20)
See Page EM-101
1st 22 (225, 16)
2nd Turn 90°
◆ Seal Washer
N·m (kgf·cm, ft·lbf) : Specified torque
◆ Non-reusable part
A09697

EM0ZN-02

DISASSEMBLY

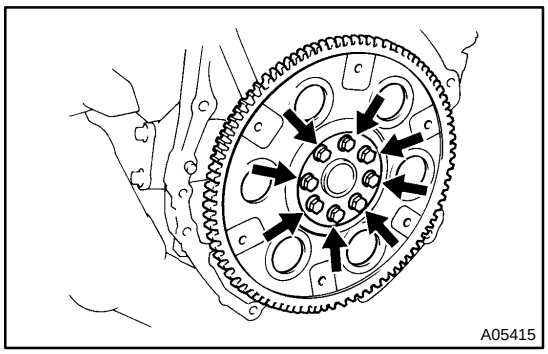

1. REMOVE DRIVE PLATE

Remove the 8 bolts, rear plate, drive plate and front spacer.

2. INSTALL ENGINE TO ENGINE STAND FOR DISASSEMBLY

3. REMOVE TIMING BELT AND PULLEYS
(See page EM-15)

4. REMOVE CYLINDER HEAD (See page EM-31)

5. DISCONNECT CRANKSHAFT POSITION SENSOR CONNECTOR

6. DISCONNECT OIL PRESSURE SWITCH CONNECTOR

7. DISCONNECT OIL LEVEL SENSOR CONNECTOR

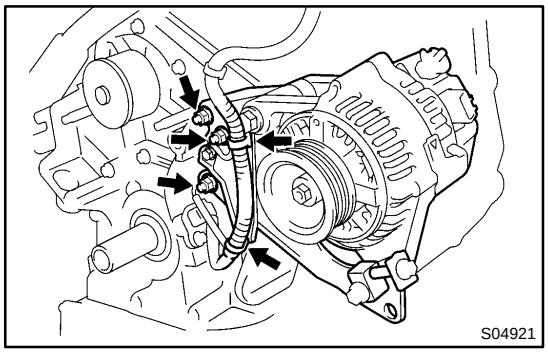

8. REMOVE ENGINE WIRE

(a) Disconnect the 2 wire clamps from the wire brackets.

(b) Remove the 2 bolts and nut, and disconnect the engine wire.

9. REMOVE GENERATOR, ADJUSTING BAR AND BRACKET ASSEMBLY

Remove the 3 nuts, the generator, adjusting bar and bracket assembly.

10. REMOVE OIL PRESSURE SWITCH
(See page LU-1)

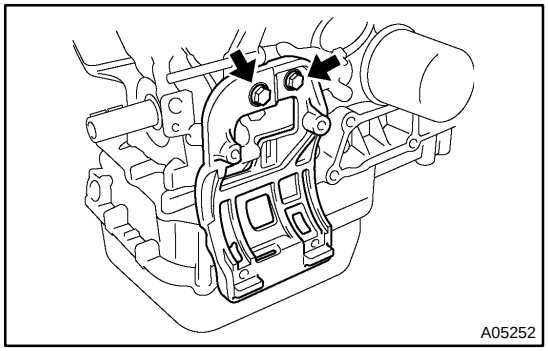

11. REMOVE A/C COMPRESSOR HOUSING BRACKET

Remove the 2 bolts and compressor housing bracket.

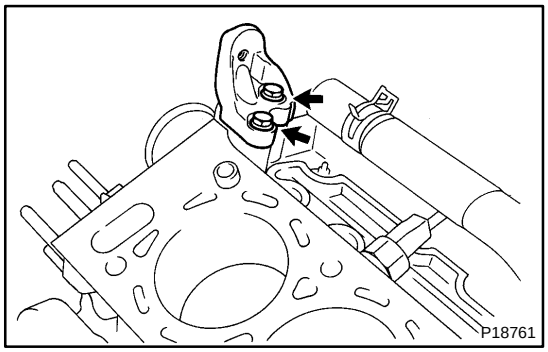

12. REMOVE NO.2 IDLER PULLEY BRACKET

Remove the 2 bolts and idler pulley bracket.

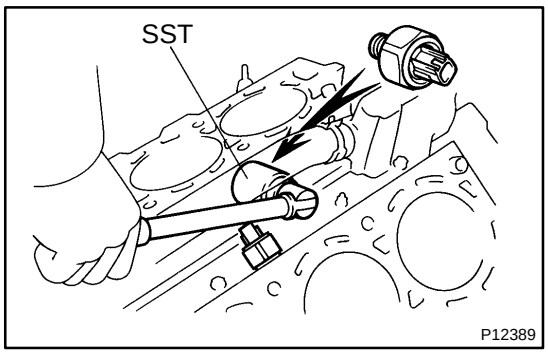

13. REMOVE KNOCK SENSORS

(a) Disconnect the 2 knock sensor connectors.

(b) Using SST, remove the 2 knock sensors.
SST 09816-30010

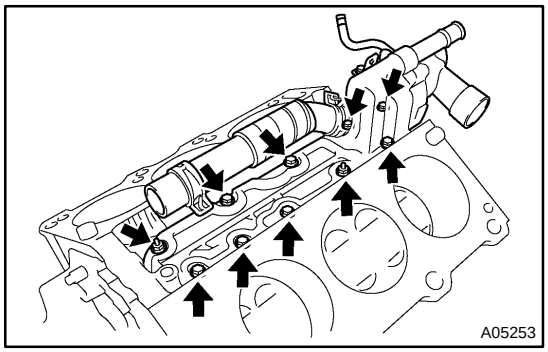

14. REMOVE WATER INLET HOUSING

(a) Remove the engine wire band.

(b) Disconnect the engine wire clamp from the bracket.

(c) Remove the 8 bolts, 2 nuts and water inlet housing.

15. REMOVE WATER PUMP (See page CO-6)

16. REMOVE NO.2 OIL PAN (See page LU-9)

17. REMOVE OIL STRAINER (See page LU-3)

18. REMOVE NO.1 OIL PAN (See page LU-3)

19. REMOVE OIL PUMP (See page LU-9)

20. REMOVE OIL FILTER (See page LU-3)

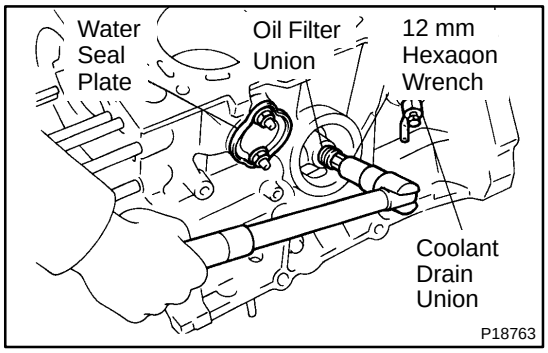

21. REMOVE OIL FILTER UNION

Using a 12 mm hexagon wrench, remove the oil filter union.

22. REMOVE WATER SEAL PLATE

Remove the 2 nuts and seal plate.

23. REMOVE ENGINE COOLANT DRAIN UNION

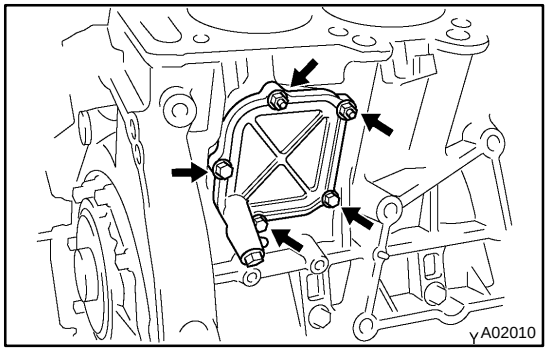

24. REMOVE CYLINDER BLOCK SIDE COVER

Remove the 3 bolts, 2 nuts, cylinder block side cover and gasket.

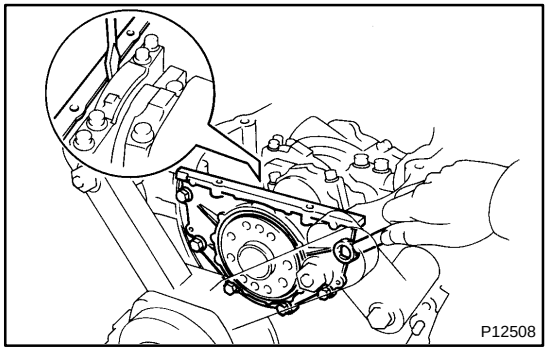

25. REMOVE REAR OIL SEAL RETAINER

(a) Remove the 6 bolts.

(b) Using a screwdriver, remove the oil seal retainer by prying the portions between the oil seal retainer and main bearing cap.

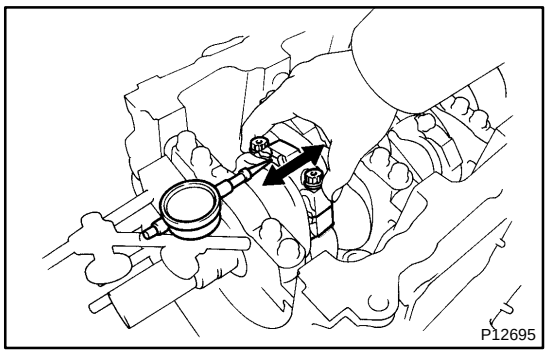

26. CHECK CONNECTING ROD THRUST CLEARANCE

Using a dial indicator, measure the thrust clearance while moving the connecting rod back and forth.

Standard thrust clearance:
0.15 - 0.30 mm (0.0059 - 0.0118 in.)
Maximum thrust clearance: 0.35 mm (0.0138 in.)

If the thrust clearance is greater than maximum, replace the connecting rod assembly(s). If necessary, replace the crankshaft.

Connecting rod thickness:
20.80 - 20.85 mm (0.8189 - 0.8209 in.)

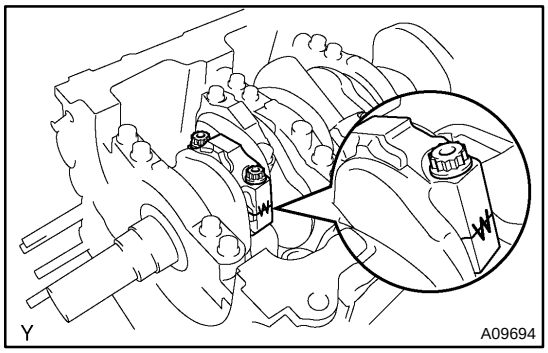

27. REMOVE CONNECTING ROD CAPS AND CHECK OIL CLEARANCE

(a) Check the matchmarks on the connecting rod and cap are aligned to ensure correct reassembly.
(b) Remove the 2 connecting rod cap bolts.

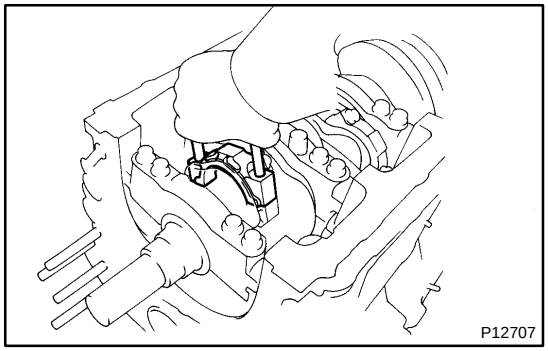

(c) Using the 2 removed connecting rod cap bolts, remove the connecting rod cap and lower bearing by wiggling the connecting rod cap right and left.

HINT:
Keep the lower bearing inserted with the connecting rod cap.

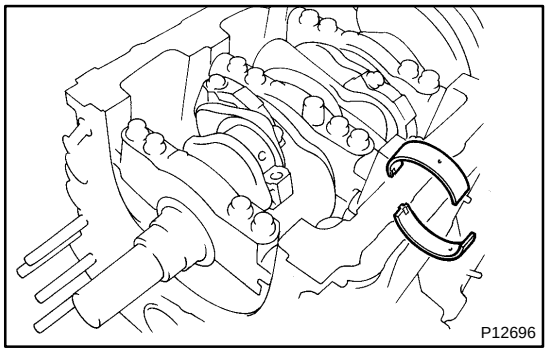

(d) Clean the crank pin and bearing.
(e) Check the crank pin and bearing for pitting and scratches.

If the crank pin or bearing is damaged, replace the bearings. If necessary, replace the crankshaft.

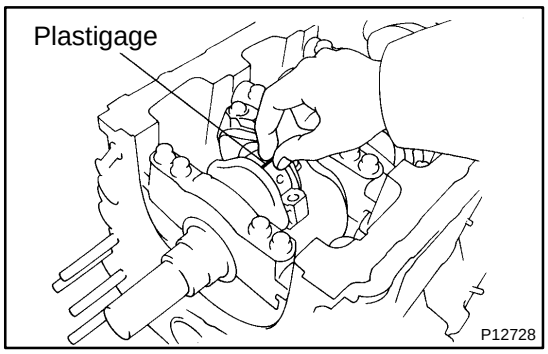

(f) Lay a strip of Plastigage across the crank pin.

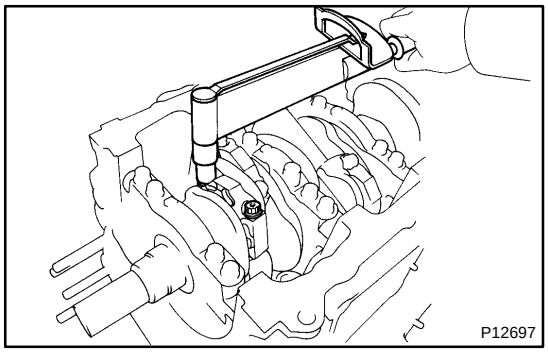

(g) Install the connecting rod cap with the 2 bolts (See page EM-101).

Torque:
1st: 24.5 N·m (250 kgf·cm, 18 ft·lbf)
2nd: Turn extra 90°

NOTICE:
Do not turn the crankshaft.

(h) Remove the 2 bolts, connecting rod cap and lower bearing (See steps (b) and (c)).

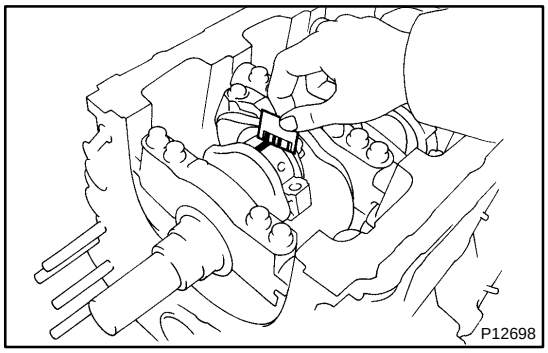

(i) Measure the Plastigage at its widest point.

Standard oil clearance:
0.038 - 0.064 mm (0.0015 - 0.0025 in.)
Maximum oil clearance: 0.08 mm (0.0031 in.)

If the oil clearance is greater than maximum, replace the bearings. If necessary, grind or replace the crankshaft.

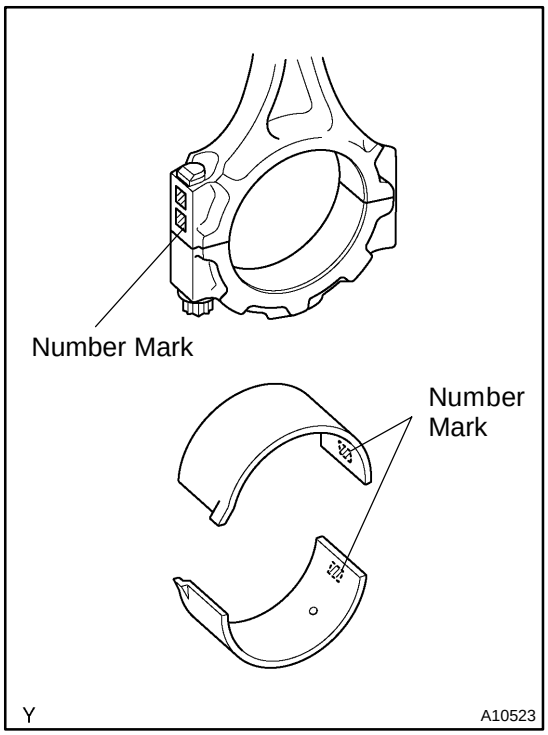

HINT:
If replacing a bearing, replace it with one having the same number as marked on the connecting rod. There are 4 sizes of standard bearings, marked ”1”, ”2”, ”3” and ”4” accordingly.

Reference:
Standard bearing center wall thickness:

Mark	mm (in.)
”1”	1.484 - 1.487 (0.0584 - 0.0585)
”2”	1.487 - 1.490 (0.0585 - 0.0587)
”3”	1.490 - 1.493 (0.0587 - 0.0588)
”4”	1.493 - 1.496 (0.0588 - 0.0589)

(j) Completely remove the Plastigage.

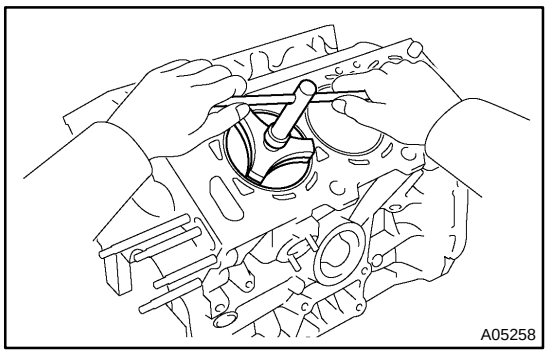

28. REMOVE PISTON AND CONNECTING ROD ASSEMBLIES

(a) Using a ridge reamer, remove all the carbon from the top of the cylinder.

(b) Push the piston, connecting rod assembly and upper bearing through the top of the cylinder block.

HINT:

- Keep the bearings, connecting rod and cap together.
- Arrange the piston and connecting rod assemblies in the correct order.

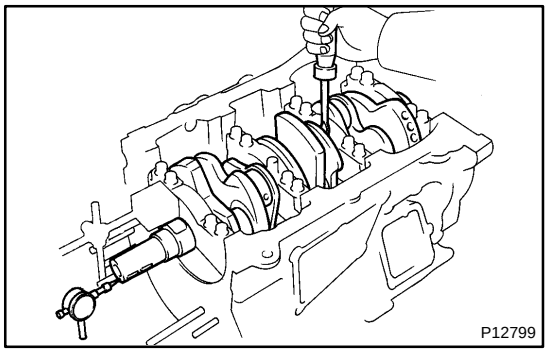

29. CHECK CRANKSHAFT THRUST CLEARANCE

Using a dial indicator, measure the thrust clearance while prying the crankshaft back and forth with a screwdriver.

Standard thrust clearance:
0.04 - 0.24 mm (0.0016 - 0.0095 in.)
Maximum thrust clearance: 0.30 mm (0.0118 in.)

If the thrust clearance is greater than maximum, replace the thrust washers as a set.

Thrust washer thickness:
1.930 - 1.980 mm (0.0760 - 0.0780 in.)

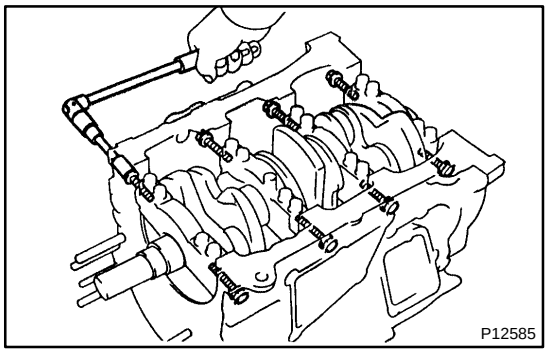

30. REMOVE MAIN BEARING CAPS AND CHECK OIL CLEARANCE

(a) Uniformly loosen and remove the 8 main bearing cap bolts and seal washers in the several passes and in the sequence shown.

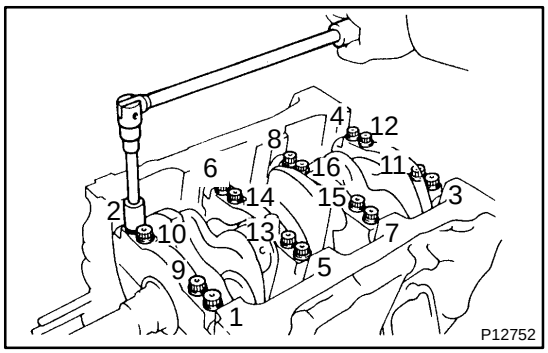

(b) Uniformly loosen and remove the 16 main bearing cap bolts in several passes and in the sequence shown.

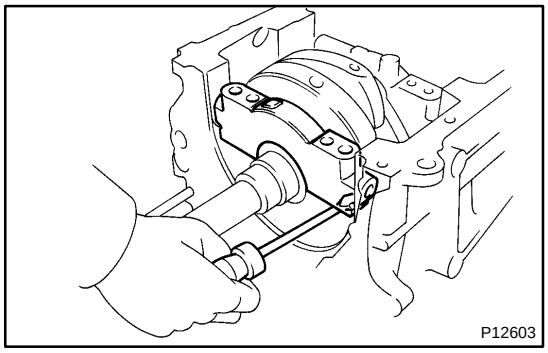

(c) Using a screwdriver, pry out main bearing caps. Remove the 4 main bearing caps, lower bearings and (No.2 main bearing cap only) 2 lower thrust washers.

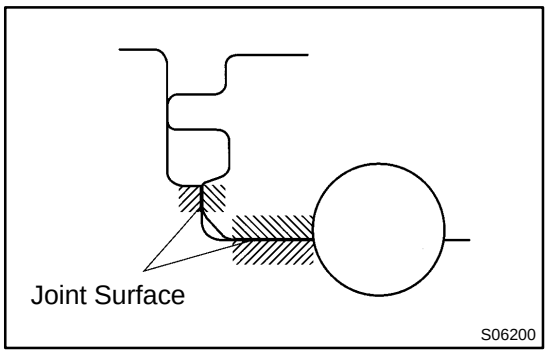

NOTICE:

Pull up the main bearing cap little by little to the right and the left by turns and pay attention not to damage the joint surface of the cylinder block and the main bearing cap.

HINT:

- Keep the lower bearing and main bearing cap together.
- Arrange the main bearing caps and lower thrust washers in correct order.

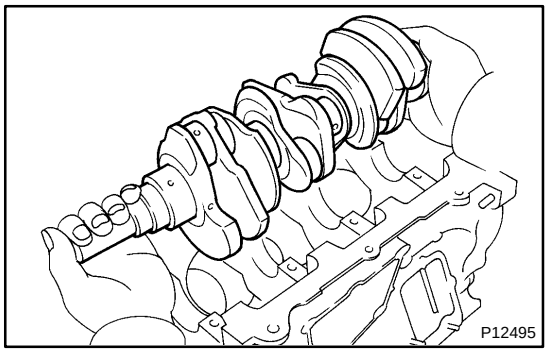

(d) Lift out the crankshaft.

HINT:

Keep the upper bearings together with the cylinder block.

(e) Clean each main journal and bearing.

(f) Check each main journal and bearing for pitting and scratches.

If the journal or bearing is damaged, replace the bearings. If necessary, replace the crankshaft.

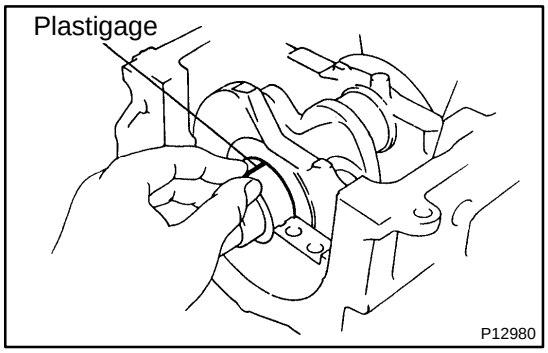

(g) Place the crankshaft on the cylinder block.

(h) Lay a strip of Plastigage across each journal.

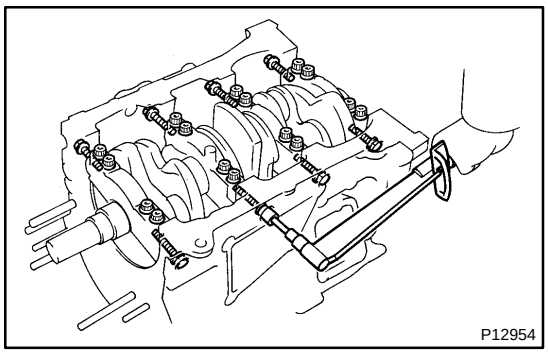

(i) Install the 4 main bearing caps. (See page EM-101)

Torque:

12 pointed head bolts:

1st: 22 N·m (225 kgf·cm, 16 ft·lbf)

2nd: Turn extra 90°

Hexagon head bolts:

27 N·m (275 kgf·cm, 20 ft·lbf)

NOTICE:

Do not turn the crankshaft.

(j) Remove the main bearing caps. (See steps (a) to (c))

(k) Measure the Plastigage at its widest point.

Standard oil clearance:

No.1 and No.4 journals	0.014 - 0.034 mm (0.0006 - 0.0013 in.)
No.2 and No.3 journals	0.026 - 0.046 mm (0.0010 - 0.0018 in.)

Maximum clearance:

No.1 and No.4 journals	0.05 mm (0.0020 in.)
No.2 and No.3 journals	0.06 mm (0.0024 in.)

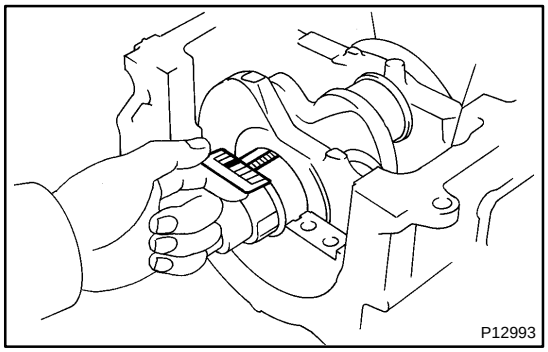

If the oil clearance is greater than maximum, replace the bearings. If necessary, replace the crankshaft.

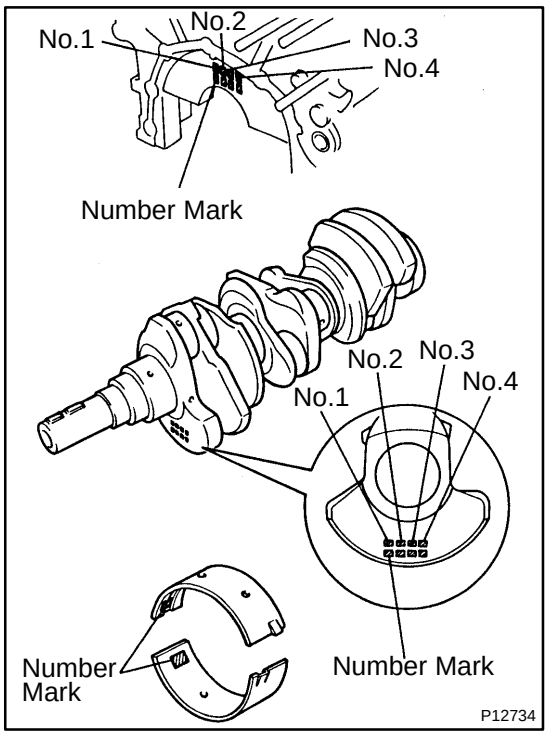

HINT:
If using a bearing, replace it with one having the same number. If the number of the bearing cannot be determined, select the correct bearing by adding together the numbers imprinted on the cylinder block and crankshaft, then refer to the table below for the appropriate bearing number. The No.1 and No.4 journal bearings have 5 standard bearing sizes, marked "3", "4", "5", "6" and "7" accordingly. The No.2 and No.3 journal bearings have 5 standard bearing sizes, marked "1", "2", "3", "4" and "5" accordingly.

No.1 and No.4 journal bearings

	Total number				" ": Number mark
Cylinder block (A) + Crankshaft (B)	0 - 5	6 - 11	12 - 17	18 - 23	24 - 28
Use bearing	"3"	"4"	"5"	"6"	"7"

EXAMPLE: Cylinder block "06" (A)
+ Crankshaft "08" (B)
= Total number 14 (Use bearing "5")

No.1 and No.4 journal standard bearings selection chart

Crankshaft number mark	Cylinder block number mark																
	00	01	02	03	04	05	06	07	08	09	10	11	12	13	14	15	16
00	3	3	3	3	3	3	4	4	4	4	4	4	5	5	5	5	5
01	3	3	3	3	3	4	4	4	4	4	4	5	5	5	5	5	5
02	3	3	3	3	4	4	4	4	4	4	5	5	5	5	5	5	6
03	3	3	3	4	4	4	4	4	4	5	5	5	5	5	5	6	6
04	3	3	4	4	4	4	4	4	5	5	5	5	5	5	6	6	6
05	3	4	4	4	4	4	4	5	5	5	5	5	5	6	6	6	6
06	4	4	4	4	4	4	5	5	5	5	5	5	6	6	6	6	6
07	4	4	4	4	4	5	5	5	5	5	5	6	6	6	6	6	6
08	4	4	4	4	5	5	5	5	5	5	6	6	6	6	6	6	7
09	4	4	4	5	5	5	5	5	5	6	6	6	6	6	6	7	7
10	4	4	5	5	5	5	5	5	6	6	6	6	6	6	7	7	7
11	4	5	5	5	5	5	5	6	6	6	6	6	6	7	7	7	7
12	5	5	5	5	5	5	6	6	6	6	6	6	7	7	7	7	7

EXAMPLE: Cylinder block "06", Crankshaft "08"
= Use bearing "5"

No.2 and No.3 journal bearings

	Total number				" ": Number mark
Cylinder block (A) + Crankshaft (B)	0 - 5	6 - 11	12 - 17	18 - 23	24 - 28
Use bearing	"1"	"2"	"3"	"4"	"5"

EXAMPLE: Cylinder block "06" (A)
+ Crankshaft "08" (B)
= Total number 14 (Use bearing "3")

No.2 and No.3 journal standard bearings selection chart

Crankshaft number mark	Cylinder block number mark																
	00	01	02	03	04	05	06	07	08	09	10	11	12	13	14	15	16
00	1	1	1	1	1	1	2	2	2	2	2	2	3	3	3	3	3
01	1	1	1	1	1	2	2	2	2	2	2	3	3	3	3	3	3
02	1	1	1	1	2	2	2	2	2	2	3	3	3	3	3	3	4
03	1	1	1	2	2	2	2	2	2	3	3	3	3	3	3	4	4
04	1	1	2	2	2	2	2	2	3	3	3	3	3	3	4	4	4
05	1	2	2	2	2	2	2	3	3	3	3	3	3	4	4	4	4
06	2	2	2	2	2	2	3	3	3	3	3	3	4	4	4	4	4
07	2	2	2	2	2	3	3	3	3	3	3	4	4	4	4	4	4
08	2	2	2	2	3	3	3	3	3	3	4	4	4	4	4	4	5
09	2	2	2	3	3	3	3	3	3	4	4	4	4	4	4	5	5
10	2	2	3	3	3	3	3	3	4	4	4	4	4	4	5	5	5
11	2	3	3	3	3	3	3	4	4	4	4	4	4	5	5	5	5
12	3	3	3	3	3	3	4	4	4	4	4	4	5	5	5	5	5

EXAMPLE: Cylinder block "06", Crankshaft "08"
= Use bearing "3"

Reference

Item	Mark	mm (in.)
Cylinder block main journal bore diameter (A)	"00"	66.000 (2.5984)
	"01"	66.001 (2.5985)
	"02"	66.002 (2.5985)
	"03"	66.003 (2.5985)
	"04"	66.004 (2.5986)
	"05"	66.005 (2.5986)
	"06"	66.006 (2.5987)
	"07"	66.007 (2.5987)
	"08"	66.008 (2.5987)
	"09"	66.009 (2.5988)
	"10"	66.010 (2.5988)
	"11"	66.011 (2.5989)
	"12"	66.012 (2.5989)
	"13"	66.013 (2.5989)
	"14"	66.014 (2.5990)
	"15"	66.015 (2.5990)
	"16"	66.016 (2.5990)
Crankshaft main journal diameter (B)	"00"	61.000 (2.4016)
	"01"	60.999 (2.4015)
	"02"	60.998 (2.4015)
	"03"	60.997 (2.4015)
	"04"	60.996 (2.4014)
	"05"	60.995 (2.4014)
	"06"	60.994 (2.4013)
	"07"	60.993 (2.4012)
	"08"	60.992 (2.4012)
	"09"	60.991 (2.4012)
	"10"	60.990 (2.4012)
	"11"	60.989 (2.4011)
	"12"	60.988 (2.4011)
Standard bearing center wall thickness	"1"	2.486 - 2.489 (0.0979 - 0.0980)
	"2"	2.489 - 2.492 (0.0980 - 0.0981)
	"3"	2.492 - 2.495 (0.0981 - 0.0982)
	"4"	2.495 - 2.498 (0.0982 - 0.0983)
	"5"	2.498 - 2.501 (0.0983 - 0.0985)
	"6"	2.501 - 2.504 (0.0985 - 0.0986)
	"7"	2.504 - 2.507 (0.0986 - 0.0987)

(l) Completely remove the Plastigage.

31. REMOVE CRANKSHAFT

(a) Lift out the crankshaft.

(b) Remove the 4 upper main bearings and 2 upper thrust washers from the cylinder block.

HINT:

Arrange the main bearing caps, bearings and thrust washers in the correct order.

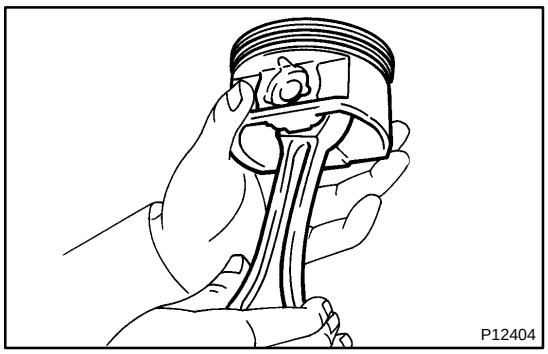

32. CHECK FIT BETWEEN PISTON AND PISTON PIN

Try to move the piston back and forth on the piston pin.
If any movement is felt, replace the piston and pin as a set.

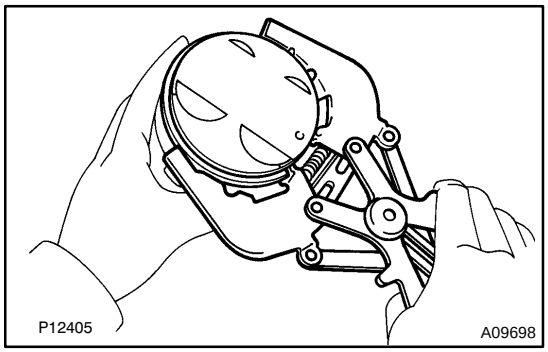

33. REMOVE PISTON RINGS

(a) Using a piston ring expander, remove the 2 compression rings.
(b) Remove the 2 side rails and oil ring by hand.

HINT:
Arrange the piston rings in the correct order only.

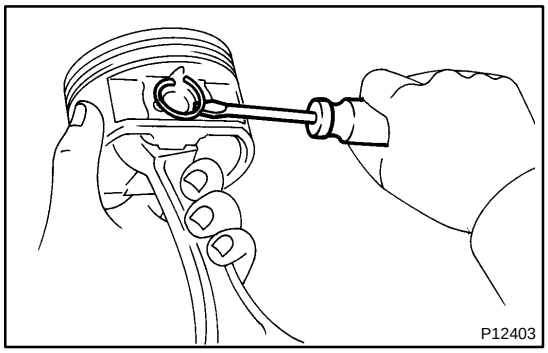

34. DISCONNECT CONNECTING ROD FROM PISTON

(a) Using a small screwdriver, pry out the 2 snap rings.

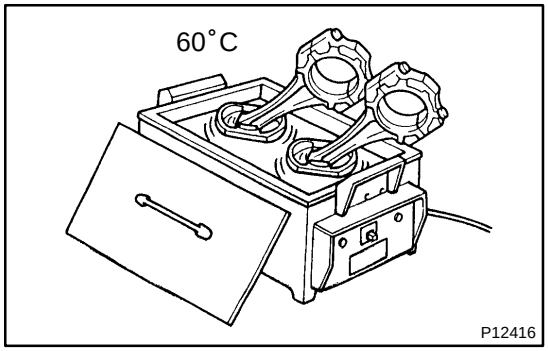

(b) Gradually heat the piston to approx. 60˚C (140˚F).

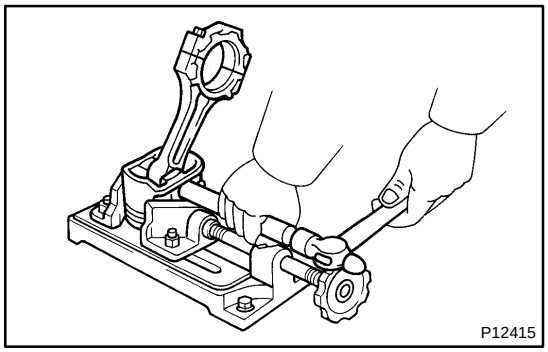

(c) Using a plastic-faced hammer and brass bar, lightly tap out the piston pin and remove the connecting rod.

HINT:

- The piston and pin are a matched set.
- Arrange the pistons, pins, rings, connecting rods and bearings in the correct order.

EM0ZO-02

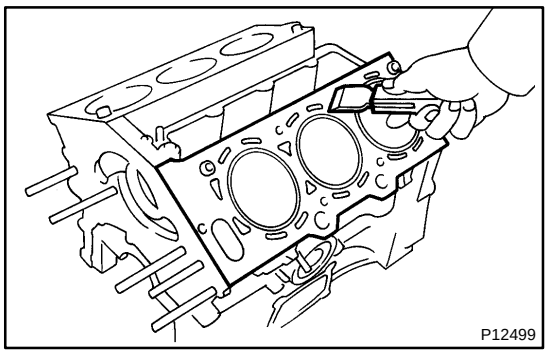
P12499

INSPECTION

1. REMOVE GASKET MATERIAL

Using a gasket scraper, remove all the gasket material from the top surface of the cylinder block.

2. CLEAN CYLINDER BLOCK

Using a soft brush and solvent, thoroughly clean the cylinder block.

NOTICE:

If the cylinder is washed at high temperatures, the cylinder liner sticks out beyond the cylinder block, so always wash the cylinder block at a temperature of 45˚C (113˚F) or less.

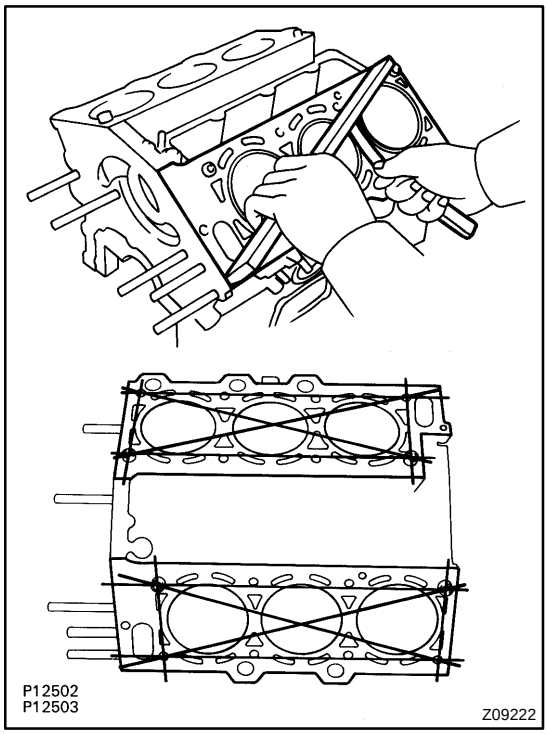

3. INSPECT TOP SURFACE OF CYLINDER BLOCK FOR FLATNESS

Using a precision straight edge and feeler gauge, measure the surface contacting the cylinder head gasket for warpage.

Maximum warpage: 0.07 mm (0.0028 in.)

If warpage is greater than maximum, replace the cylinder block.

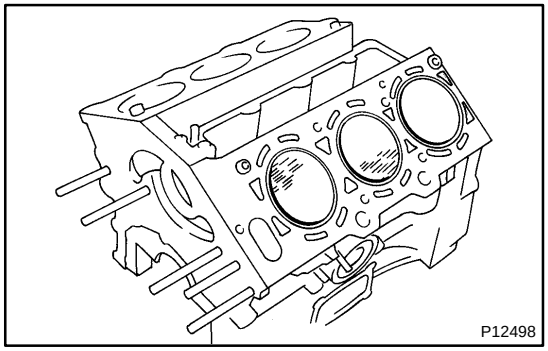
P12498

4. INSPECT CYLINDER FOR VERTICAL SCRATCHES

Visually check the cylinder for vertical scratches.

If deep scratches are present, replace the cylinder block.

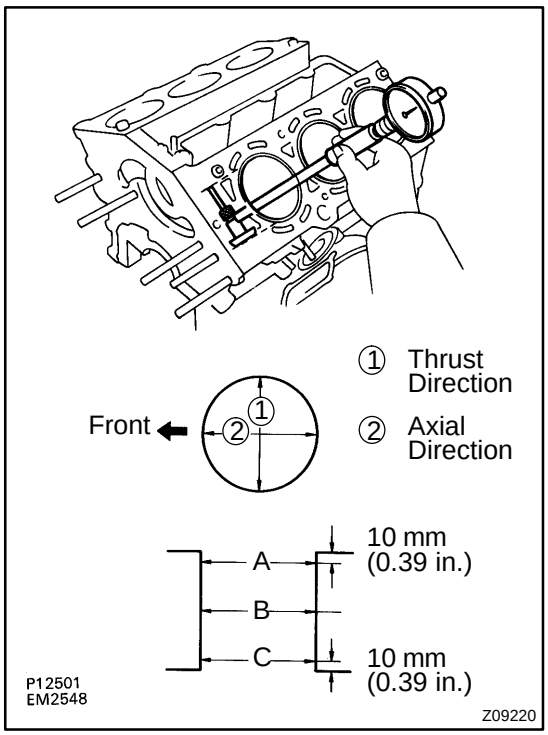

5. INSPECT CYLINDER BORE DIAMETER

Using a cylinder gauge, measure the cylinder bore diameter at positions A, B and C in the thrust and axial directions.

Standard diameter:
87.500 - 87.512 mm (3.4449 - 3.4453 in.)
Maximum diameter: 87.52 mm (3.4457 in.)

If the diameter is greater than maximum, replace the cylinder block.

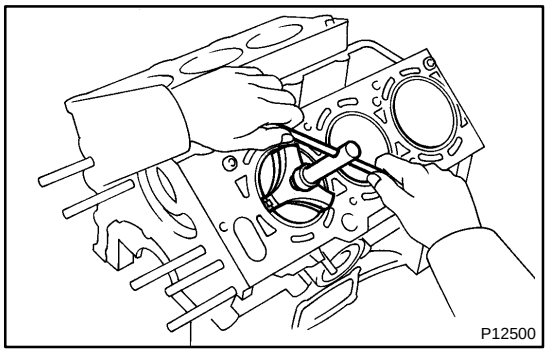

6. REMOVE CYLINDER RIDGE

If the wear is less than 0.2 mm (0.008 in.), using a ridge reamer, grind the top of the cylinder.

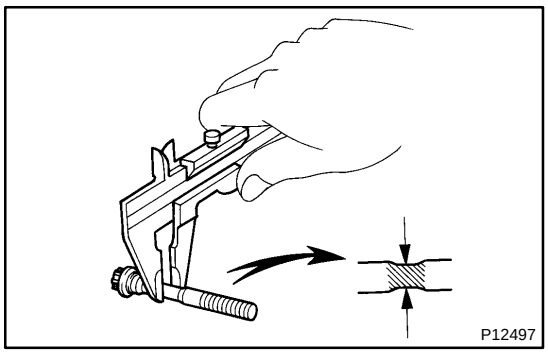

7. INSPECT 12 POINTED HEAD MAIN BEARING CAP BOLTS

Using vernier calipers, measure the tension portion diameter of the bolt.

Standard diameter:
7.500 - 7.600 mm (0.2953 - 0.2992 in.)
Minimum diameter: 7.20 mm (0.2835 in.)

If the diameter is less than minimum, replace the bolt.

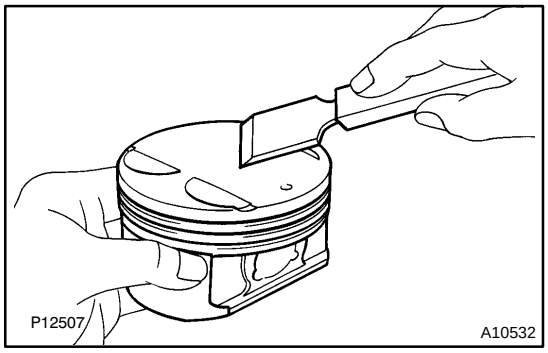

8. CLEAN PISTON

(a) Using a gasket scraper, remove the carbon from the piston top.

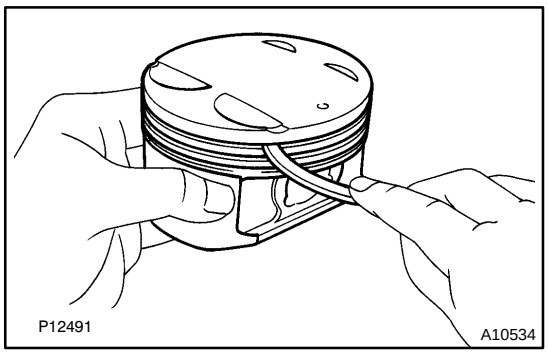

(b) Using a groove cleaning tool or broken ring, clean the piston ring grooves.

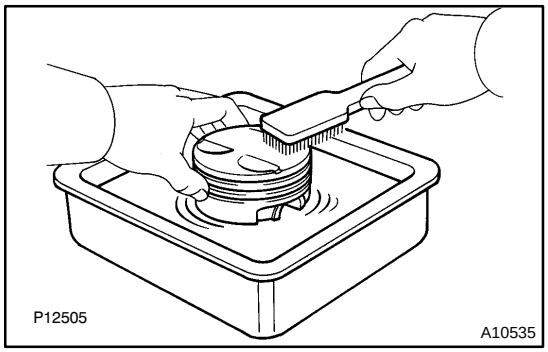

(c) Using solvent and a brush, thoroughly clean the piston.

NOTICE:

Do not use a wire brush.

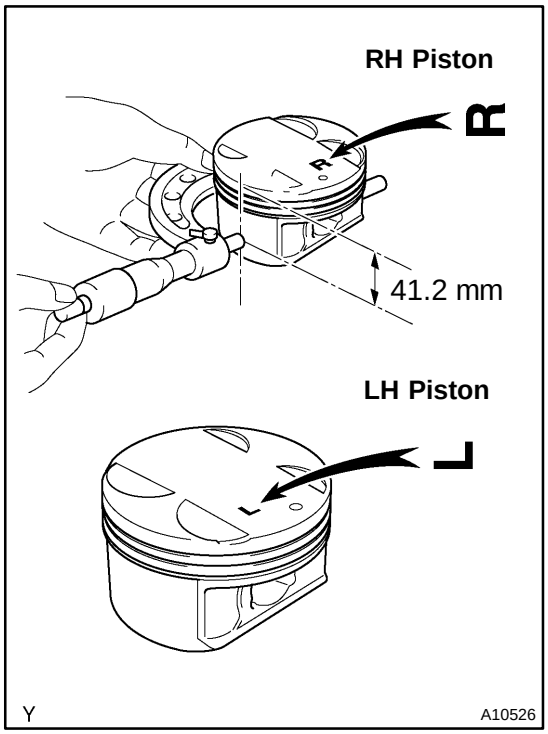

9. INSPECT PISTON OIL CLEARANCE

(a) Using a micrometer, measure the piston diameter at right angles to the piston pin center line, 41.2 mm (1.622 in.) from the piston head.

Piston diameter:

87.453 - 87.467 mm (3.4430 - 3.4436 in.)

(b) Measure the cylinder bore diameter in the thrust directions. (See step 5.)

(c) Subtract the piston diameter measurement from the cylinder bore diameter measurement.

Standard oil clearance:

0.033 - 0.059 mm (0.0013 - 0.0023 in.)

Maximum oil clearance: 0.13 mm (0.0051 in.)

If the oil clearance is greater than maximum, replace all the 6 pistons. If necessary, replace the cylinder block.

HINT:

The shape of the piston varies for the RH and LH banks. The RH piston is marked with ”R”, the LH piston with ”L”.

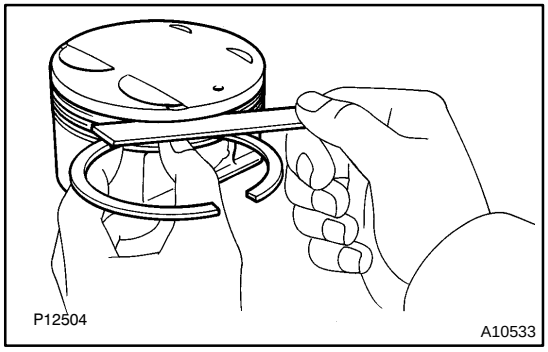

10. INSPECT PISTON RING GROOVE CLEARANCE

Using a feeler gauge, measure the clearance between new piston right and the wall of the ring groove.

Ring groove clearance:

No.1	0.010 - 0.060 mm (0.0004 - 0.0028 in.)
No.2	0.020 - 0.060 mm (0.0008 - 0.0024 in.)

If the clearance is not as specified, replace the piston.

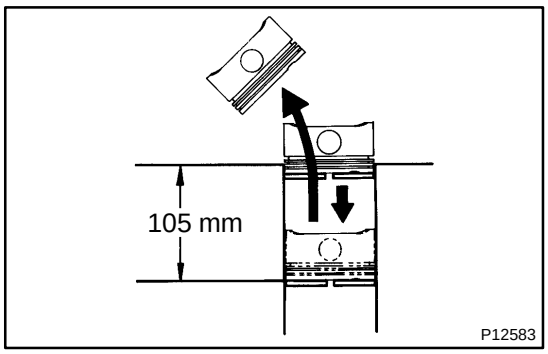

11. INSPECT PISTON RING END GAP

(a) Insert the piston ring into the cylinder bore.

(b) Using a piston, push the piston ring a little beyond the bottom of the ring travel, 105 mm (4.13 in.) from the top of the cylinder block.

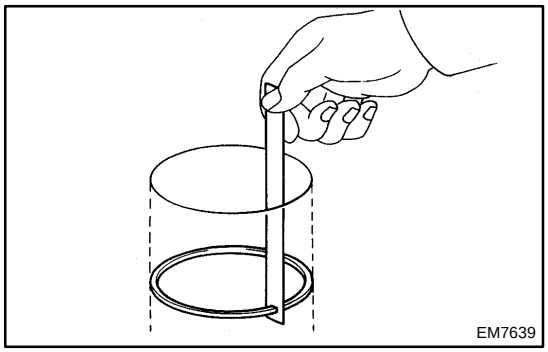

(c) Using a feeler gauge, measure the end gap.

Standard end gap:

No.1	0.25 - 0.35 mm (0.0098 - 0.0138 in.)
No.2	0.35 - 0.45 mm (0.0138 - 0.0177 in.) for G2 mark 0.55 - 0.65 mm (0.0217 - 0.0256 in.) for 2T mark
Oil (Side rail)	0.15 - 0.40 mm (0.0059 - 0.0157 in.)

Maximum end gap:

No.1	0.95 mm (0.0374 in.)
No.2	1.05 mm (0.0413 in.) for G2 mark 1.25 mm (0.0492 in.) for 2T mark
Oil (Side rail)	1.00 mm (0.0394 in.)

If the end gap is greater than maximum, replace the piston ring.

If the end gap is greater than maximum, even with a new piston ring, replace the cylinder block.

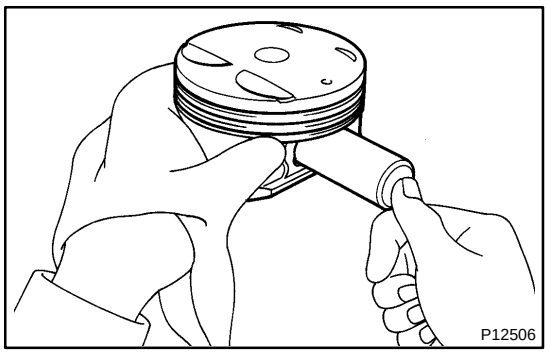

12. INSPECT PISTON PIN FIT

At 60˚C (140˚F), you should be able to push the piston pin into the piston pin hole with your thumb.

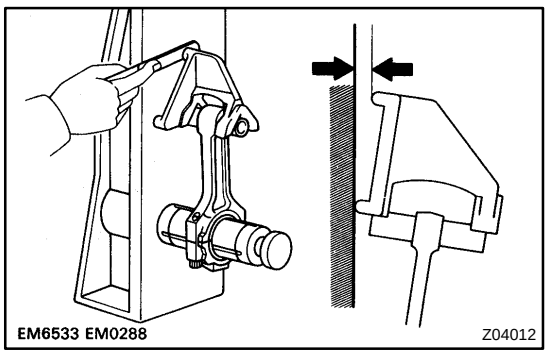

13. INSPECT CONNECTING ROD ALIGNMENT

Using a rod aligner and feeler gauge, check the connecting rod alignment.

- Check for out-of-alignment.

Maximum out-of-alignment:

0.05 mm (0.0020 in.) per 100 mm (3.94 in.)

If bend is greater than maximum, replace the connecting rod assembly.

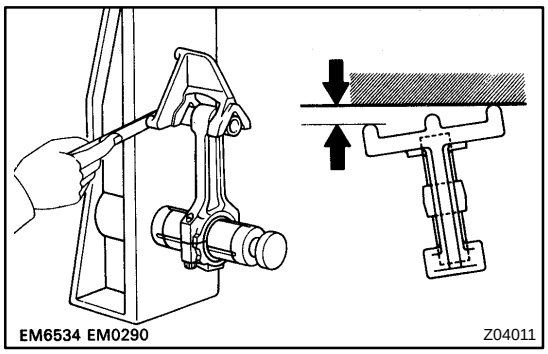

- Check for twist

Maximum twist:

0.15 mm (0.0059 in.) per 100 mm (3.94 in.)

If twist is greater than maximum, replace the connecting rod assembly.

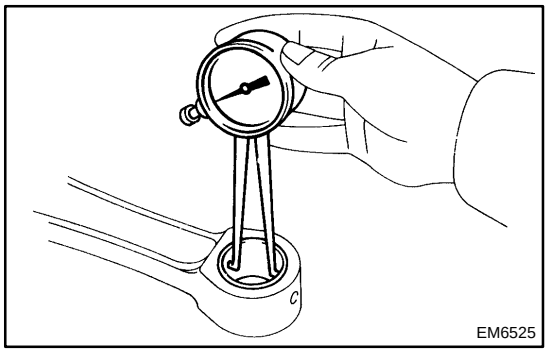

14. INSPECT PISTON PIN OIL CLEARANCE

(a) Using a caliper gauge, measure the inside diameter of the connecting rod bushing.

Bushing inside diameter:

22.005 - 22.014 mm (0.8663 - 0.8667 in.)

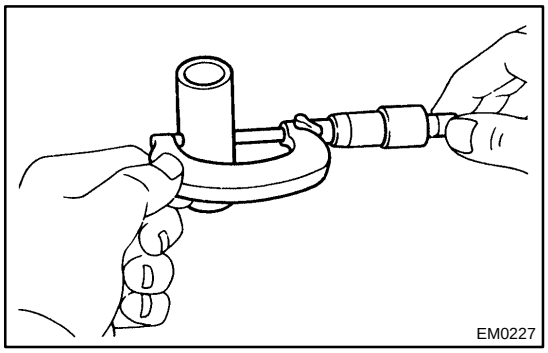

(b) Using a micrometer, measure the piston pin diameter.

Piston pin diameter:

21.997 - 22.006 mm (0.8660 - 0.8664 in.)

(c) Subtract the piston pin diameter measurement from the bushing inside diameter measurement.

Standard oil clearance:

0.005 - 0.011 mm (0.0002 - 0.0004 in.)

Maximum oil clearance: 0.05 mm (0.0020 in.)

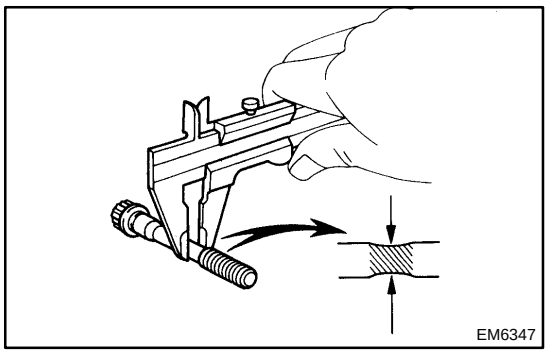

15. INSPECT CONNECTING ROD BOLTS

Using vernier calipers, measure the tension portion diameter of the bolt.

Standard diameter: 7.2 - 7.3 mm (0.284 - 0.287 in.)

Minimum diameter: 7.0 mm (0.276 in.)

If the diameter is less than minimum, replace the bolt.

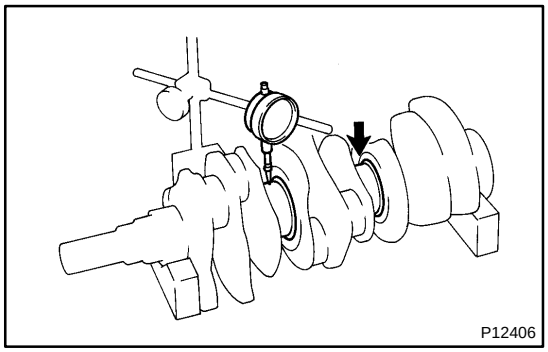

16. INSPECT CRANKSHAFT FOR CIRCLE RUNOUT

(a) Place the crankshaft on V-blocks.

(b) Using a dial indicator, measure the circle runout, as shown in the illustration.

Maximum circle runout: 0.06 mm (0.0024 in.)

If the circle runout is greater than maximum, replace the crankshaft.

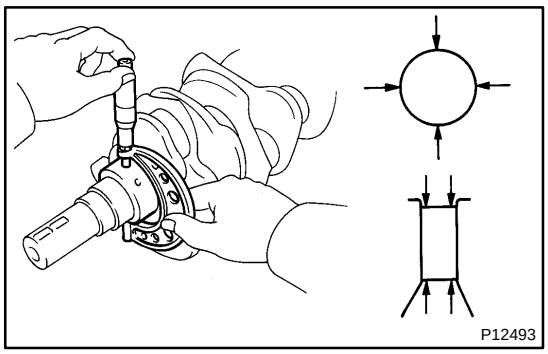

17. INSPECT MAIN JOURNALS AND CRANK PINS

(a) Using a micrometer, measure the diameter of each main journal and crank pin.

Main journal diameter:
60.988 - 61.000 mm (2.4011 - 2.4016 in.)
Crank pin diameter:
52.992 - 53.000 mm (2.0862 - 2.0866 in.)

If the diameter is not as specified, check the oil clearance.
(See page EM-83)
If necessary, replace the crankshaft.

(b) Check each main journal and crank pin for taper and out-of-round as shown.

Maximum taper and out-of-round:
0.02 mm (0.0008 in.)

If the taper and out-of-round is greater than maximum, replace the crankshaft.

EM0ZQ-02

REASSEMBLY

HINT:

- Thoroughly clean all parts to be assembled.
- Before installing the parts, apply new engine oil to all sliding and rotating surfaces.
- Replace all gaskets, O-rings and oil seals with new parts.

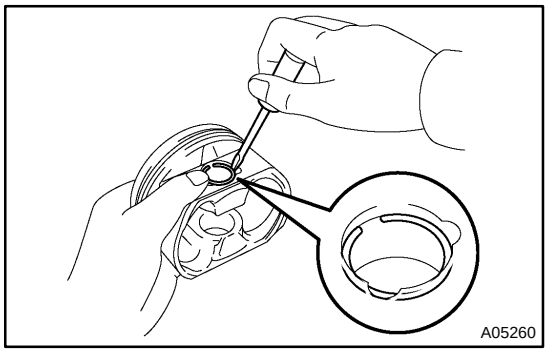

1. ASSEMBLE PISTON AND CONNECTING ROD

(a) Using a small screwdriver, install a new snap ring at one end of the piston pin hole.

HINT:

Be sure that end gap of the snap ring is not aligned with the pin hole cutout portion of the piston.

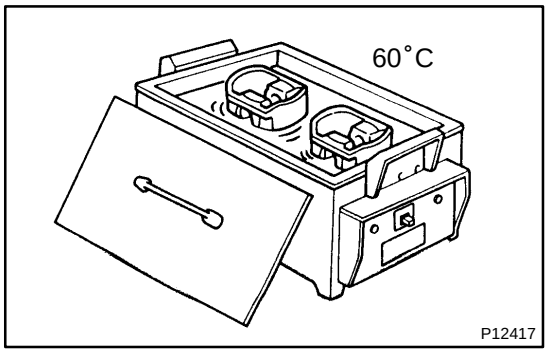

(b) Gradually heat the piston to about 60˚C (140˚F).

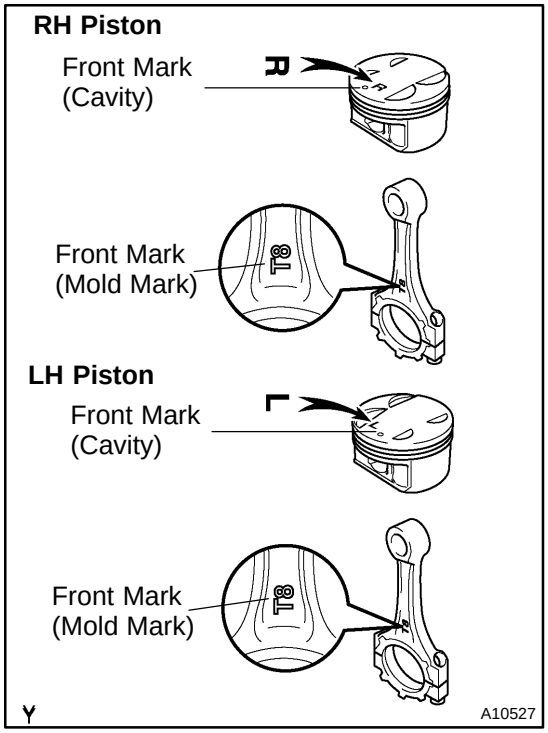

(c) Coat the piston pin with engine oil.

(d) Align the front marks of the piston and connecting rod, and push in the piston pin with your thumb.

(e) Using a small screwdriver, install a new snap ring on the other end of the piston pin hole.

HINT:

Be sure that end gap of the snap ring is not aligned with the pin hole cutout portion of the piston.

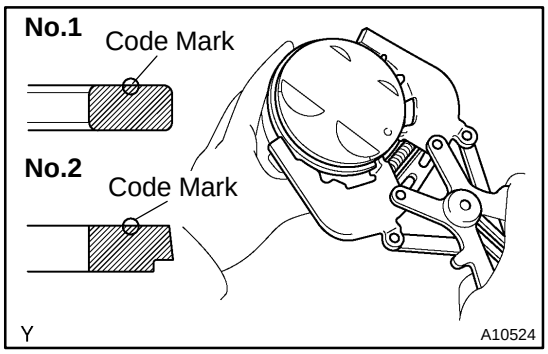

2. INSTALL PISTON RINGS

(a) Install the oil ring expander and 2 side rails by hand.

(b) Using a piston ring expander, install the 2 compression rings with the code mark facing upward.

Code mark:

No.1	T or G1
No.2	2T or G2

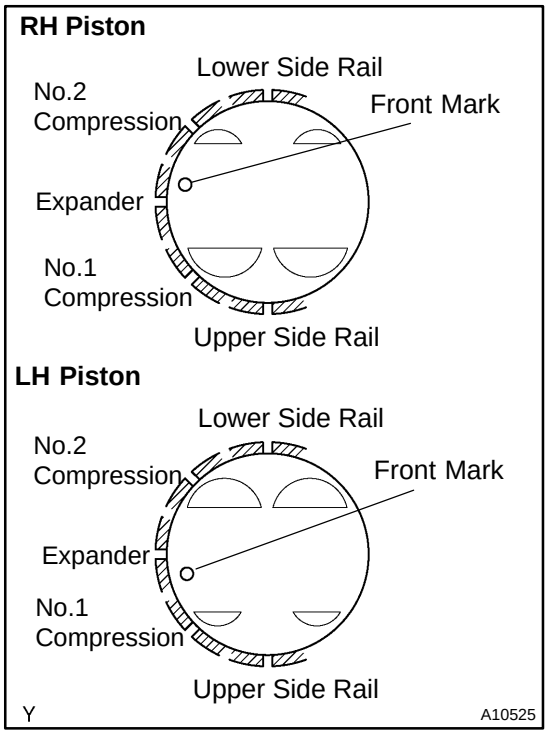

(c) Position the piston rings so that the ring ends are as shown.

NOTICE:

Do not align the ring ends.

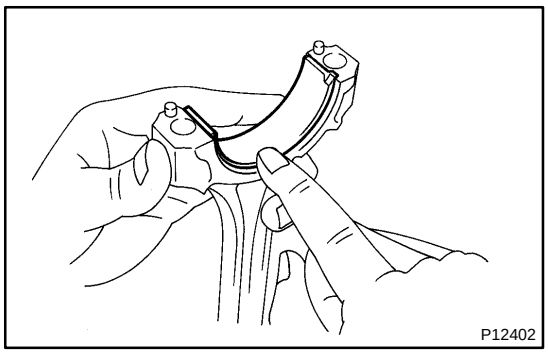

3. INSTALL CONNECTING ROD BEARINGS

(a) Align the bearing claw with the groove of the connecting rod or connecting cap.

(b) Install the bearings in the connecting rod and connecting rod cap.

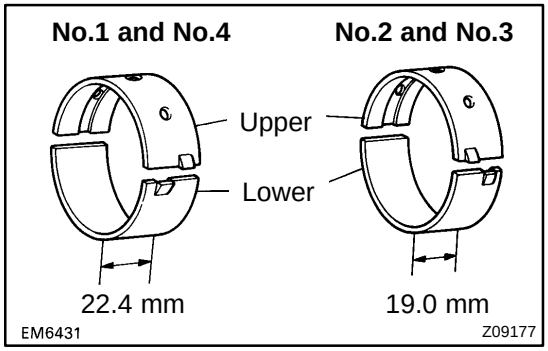

4. INSTALL MAIN BEARINGS

HINT:

- Main bearings come in widths of 19.0 mm (0.748 in.) and 22.4 mm (0.882 in.). Install the 22.4 mm (0.882 in.) bearings in the No.1 and No.4 cylinder block journal positions with the main bearing cap. Install the 19.0 mm (0.748 in.) bearings in the No.2 and No.3 positions.
- Upper bearings have an oil groove and oil holes; lower bearings do not.

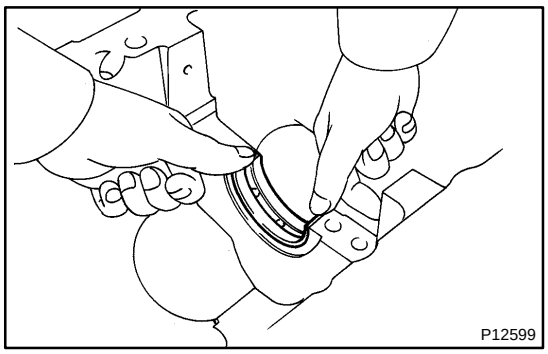

(a) Align the bearing claw with the claw groove of the cylinder block, and push in the 4 upper bearings.

NOTICE:

Install the bearing with the oil hole in the cylinder block.

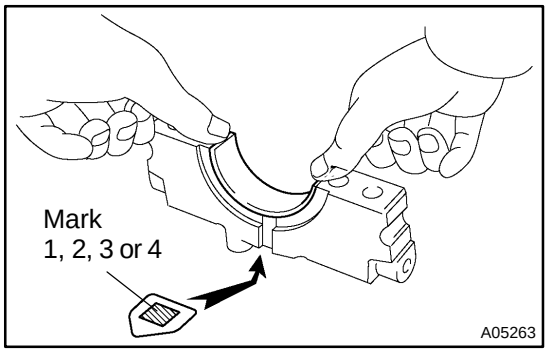

(b) Align the bearing claw with the claw groove of the main bearing cap, and push in the 4 lower bearings.

HINT:

A number is marked on each main bearing cap to indicate the installation position.

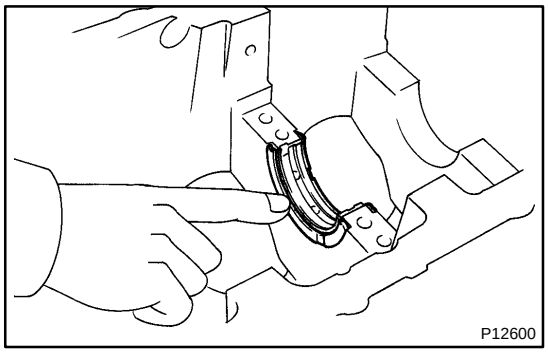

5. INSTALL UPPER THRUST WASHERS

Install the 2 thrust washers under the No.2 journal position of the cylinder block with the oil grooves facing outward.

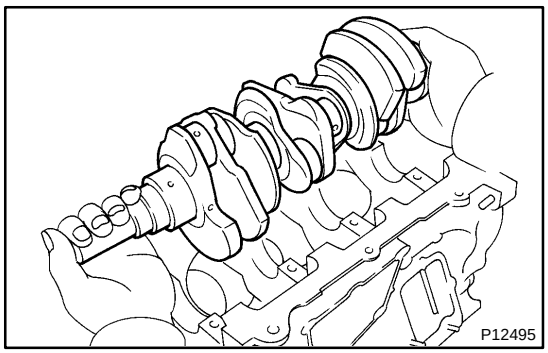

6. PLACE CRANKSHAFT ON CYLINDER BLOCK

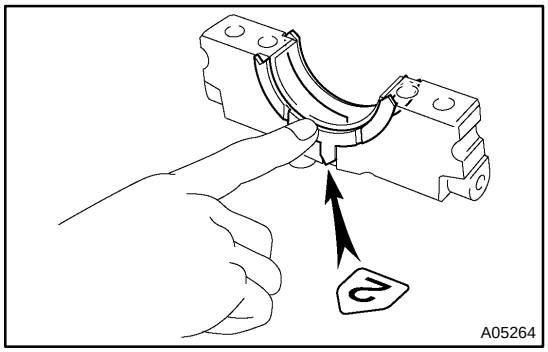

7. PLACE MAIN BEARING CAPS AND LOWER THRUST WASHERS ON CYLINDER BLOCK

(a) Install the 2 thrust washers on the No.2 bearing cap with the grooves facing outward.

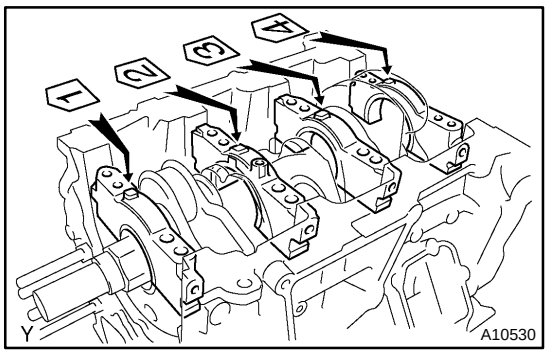

(b) Temporarily place the 4 main bearing caps level and let them in their proper locations.

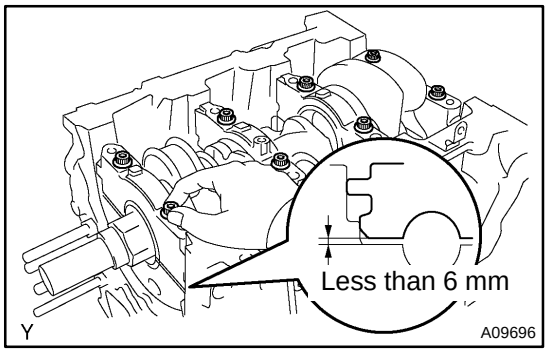

(c) Apply a light coat of engine oil on the threads and under the main bearing cap bolts for the 12 pointed head.

(d) Temporarily install the 8 main bearing cap bolts to the inside positions.

(e) Insert the main bearing cap with your hand until the clearance between the main bearing cap and the cylinder block will become less than 6 mm (0.23 in.) by making the 2 internal main bearing cap bolts as a guide.

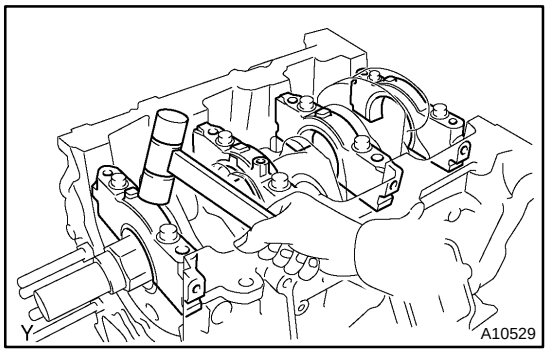

(f) Using a plastic-faced hammer, lightly tap the bearing cap to ensure a proper fit.

8. INSTALL 12 POINTED HEAD MAIN BEARING CAP BOLTS

HINT:

- The main bearing cap bolts are tightened in 2 progressive steps (steps (b) and (d)).
- If any of the main bearing cap bolts is broken or deformed, replace it.

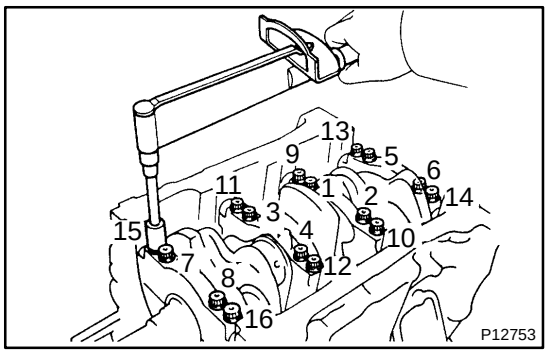

(a) Apply a light coat of engine oil on the threads and under the main bearing cap bolts.

(b) Install and uniformly tighten the 16 main bearing cap bolts in several passes and in the sequence shown.

Torque: 22 N·m (225 kgf·cm, 16 ft·lbf)

If any of the main bearing cap bolts does not meet the torque specification, replace the main bearing cap bolt.

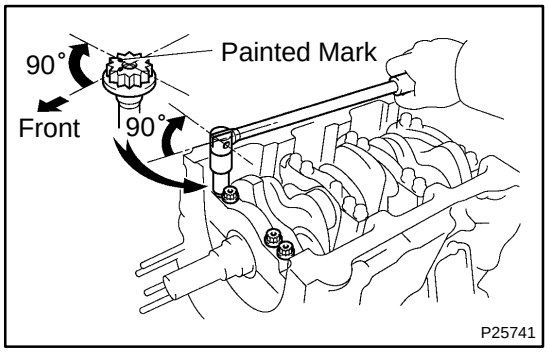

(c) Mark the front of the main bearing cap bolts with paint.

(d) Retighten the main bearing cap bolts by 90° in the numerical order shown.

(e) Check that the painted mark is now at a 90° angle to the front.

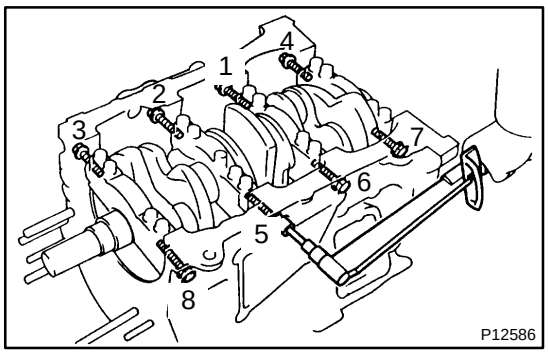

9. INSTALL HEXAGON HEAD MAIN BEARING CAP BOLTS

(a) Install a new seal washer to the main bearing cap bolt.

(b) Install and uniformly tighten the 8 main bearing cap bolts in several passes and in the sequence shown.

Torque: 27 N·m (275 kgf·cm, 20 ft·lbf)

10. CHECK CRANKSHAFT THRUST CLEARANCE

(See page EM-83)

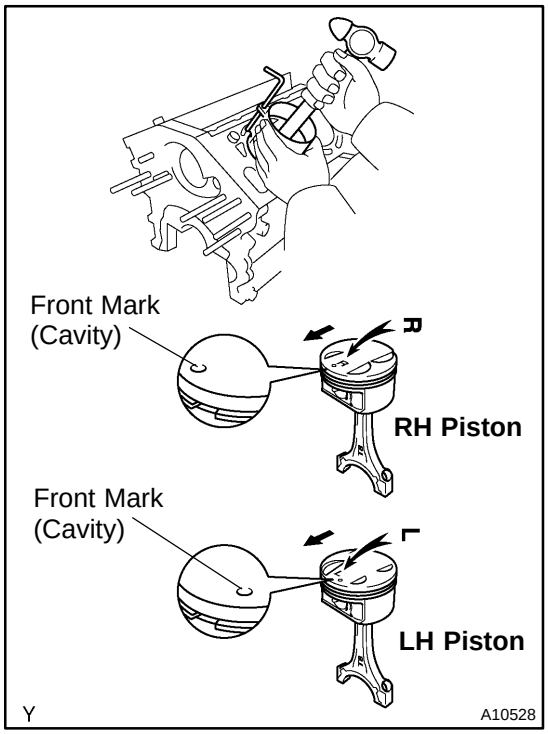

11. INSTALL PISTON AND CONNECTING ROD ASSEMBLES

Using a piston ring compressor, push the correctly numbered piston and connecting rod assemblies into each cylinder with the front mark of the piston facing forward.

HINT:

The shape of the piston varies for the RH and LH banks. The RH piston is marked with ”R”, the LH piston with ”L”.

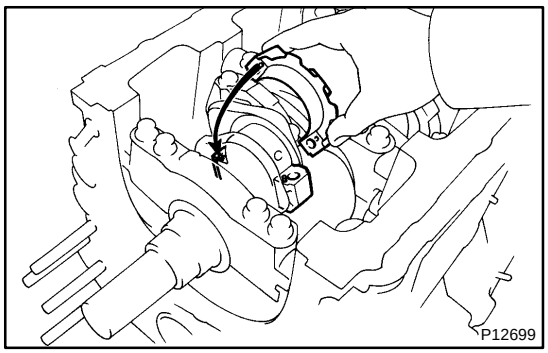

12. PLACE CONNECTING ROD CAP ON CONNECTING ROD

(a) Match the numbered connecting rod cap with the connecting rod.

(b) Align the pin dowels of the connecting rod cap with the pins of the connecting rod, and install the connecting rod.

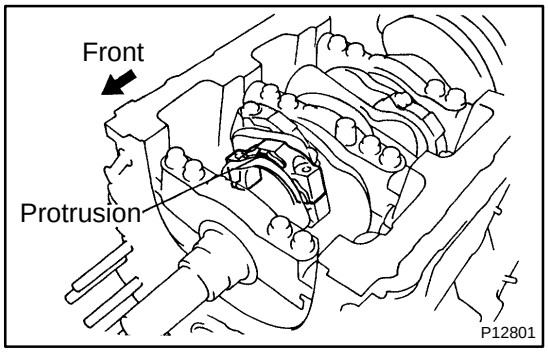

(c) Check that the protrusion of the connecting rod cap is facing in the correct direction.

13. INSTALL CONNECTING ROD CAP BOLTS

HINT:

- The connecting rod cap bolts are tightened in 2 progressive steps (steps (b) and (d)).
- If any of the connecting rod cap bolts is broken or deformed, replace it.

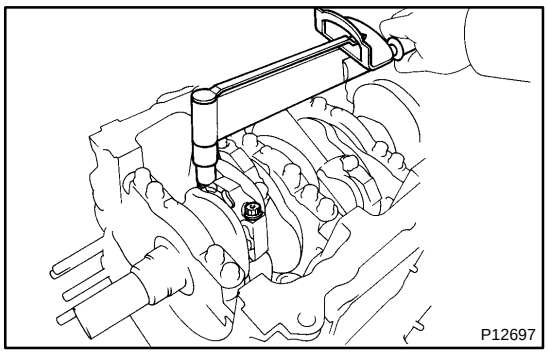

(a) Apply a light coat of engine oil on the threads and under the heads of the connecting rod cap bolts.
(b) Install and alternately tighten the 2 connecting rod cap bolts in several passes.
Torque: 24.5 N·m (250 kgf·cm, 18 ft·lbf)

If any of the connecting rod cap bolts does not meet the torque specification, replace the connecting rod cap bolts.

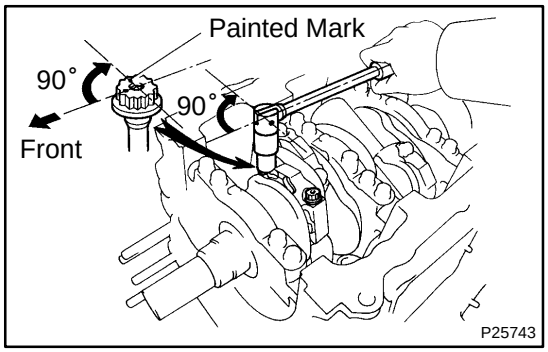

(c) Mark the front of the connecting cap bolts with paint.
(d) Retighten the cap bolts by 90° as shown.
(e) Check that the painted mark is now at a 90° angle to the front.
(f) Check that the crankshaft turns smoothly.

14. CHECK CONNECTING ROD THRUST CLEARANCE (See page EM-83)

15. INSTALL REAR OIL SEAL RETAINER

(a) Remove any old packing (FIPG) material and be careful not to drop any oil on the contact surfaces of the oil seal retainer and cylinder block.
- Using a razor blade and gasket scraper, remove all the oil packing (FIPG) material from the gasket surfaces and sealing grooves.
- Thoroughly clean all components to remove all the loose material.
- Using a non-residue solvent, clean both sealing surfaces.

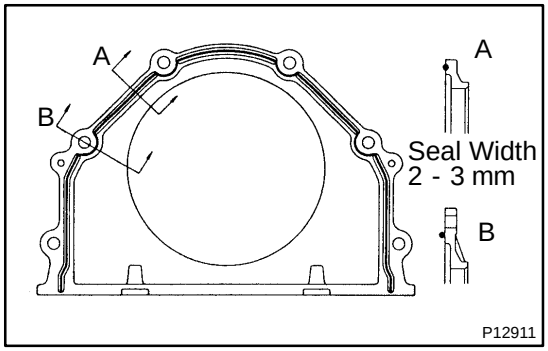

(b) Apply seal packing to the oil seal retainer as shown in the illustration.
Seal packing: Part No. 08826-00080 or equivalent
- Install a nozzle that has been cut to a 2 - 3 mm (0.08 - 0.12 in.) opening.
- Parts must be assembled within 3 minutes of application. Otherwise the material must be removed and reapplied.
- Immediately remove nozzle from the tube and reinstall cap.

(c) Install the oil seal retainer with the 6 bolts. Uniformly tighten the bolt in several passes and in the sequence shown.
Torque: 8 N·m (80 kgf·cm, 69 in.·lbf)

16. INSTALL CYLINDER BLOCK SIDE COVER

Install a new gasket and the cylinder block side cover with the 3 bolts and 2 nuts.
Torque: 9 N·m (90 kgf·cm, 78 in.·lbf)

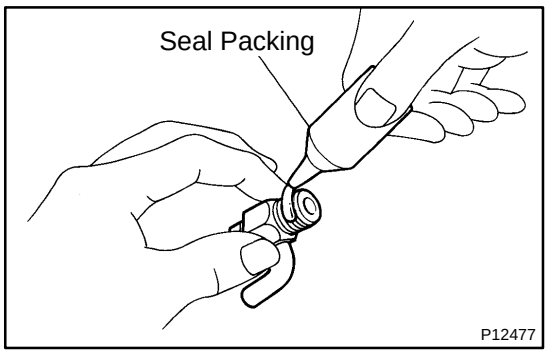

17. INSTALL ENGINE COOLANT DRAIN UNION

(a) Apply seal packing to 2 or 3 threads.

Seal packing: Part No. 08826-00100 or equivalent

(b) Install the drain union.

Torque: 39 N·m (400 kgf·cm, 29 ft·lbf)

HINT:

After applying the specified torque, rotate the drain union clockwise until its drain port is facing downward.

18. INSTALL WATER SEAL PLATE

(a) Remove any old packing (FIPG) material and be careful not to drop any oil on the contact surfaces of the seal plate and cylinder block.

- Using a razor blade and gasket scraper, remove all the old packing (FIPG) material from the gasket surfaces and sealing groove.
- Thoroughly clean all components to remove all the loose material.
- Using a non-residue solvent, clean both sealing surfaces.

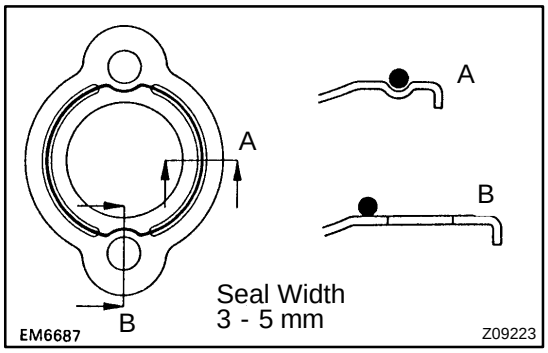

(b) Apply seal packing to the seal plate as shown in the illustration.

Seal packing: Part No. 08826-00100 or equivalent

- Install a nozzle that has been cut to a 3 - 5 mm (0.12 - 0.20 in.) opening.
- Parts must be assembled within 3 minutes of application. Otherwise the material must be removed and reapplied.
- Immediately remove nozzle from the tube and reinstall cap.

(c) Install the seal plate with the 2 nuts.

Torque: 18 N·m (180 kgf·cm, 13 ft·lbf)

19. INSTALL OIL FILTER UNION

Torque: 30 N·m (310 kgf·cm, 22 ft·lbf)

20. INSTALL OIL FILTER (See page LU-3)

21. INSTALL OIL PUMP (See page LU-15)

22. INSTALL NO.1 OIL PAN (See page LU-15)

23. INSTALL OIL STRAINER (See page LU-15)

24. INSTALL NO.2 OIL PAN (See page LU-15)

25. INSTALL WATER PUMP (See page CO-8)

26. INSTALL WATER INLET HOUSING

(a) Remove any old packing (FIPG) material and be careful not to drop any oil on the contact surfaces of the water inlet housing and cylinder block.

- Using a razor blade and gasket scraper, remove all the old packing (FIPG) material from the gasket surfaces and sealing grooves.
- Thoroughly clean all components to remove all the loose material.

- Using a non-residue solvent, clean both sealing surfaces.

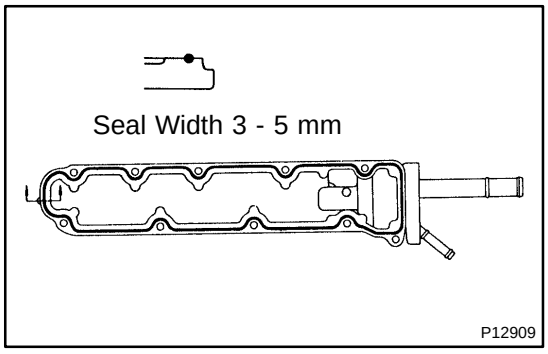

(b) Apply seal packing to the water inlet housing as shown in the illustration.

Seal packing: Part No. 08826-00100 or equivalent

- Install a nozzle that has been cut to a 3 - 5 mm (0.12 - 0.20 in.) opening.

HINT:

Avoid applying an excessive amount to the surface.

- Parts must be assembled within 3 minutes of application. Otherwise the material must be removed and reapplied.
- Immediately remove nozzle from the tube and reinstall cap.

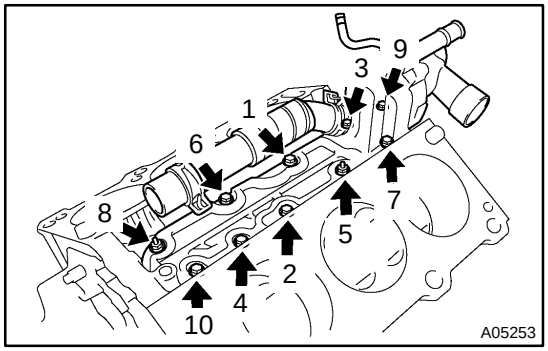

(c) Install the water inlet housing with the 8 bolts and 2 nuts. Uniformly tighten the bolts and nuts in several passes and in the sequence shown.

Torque: 8 N·m (80 kgf·cm, 69 in.·lbf)

(d) Connect the No.2 ECT switch connector.

(e) Connect the engine wire clamp to the water inlet.

(f) Install the engine wire band.

(g) Install the engine wire clamp.

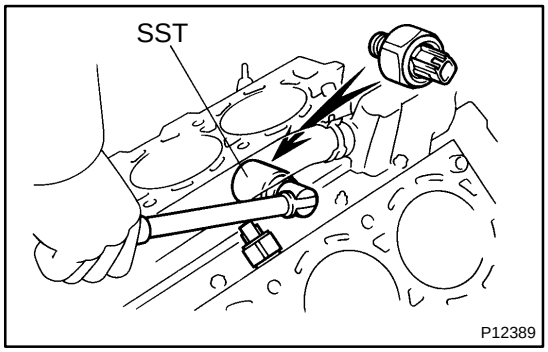

27. INSTALL KNOCK SENSORS

(a) Using SST, install the 2 knock sensors.

SST 09816-30010

Torque: 39 N·m (400 kgf·cm, 29 ft·lbf)

(b) Connect the 2 knock sensor connectors.

28. INSTALL NO.2 IDLER PULLEY BRACKET

Torque: 28 N·m (290 kgf·cm, 21 ft·lbf)

29. INSTALL A/C COMPRESSOR HOUSING BRACKET

Torque: 25 N·m (250 kgf·cm, 18 ft·lbf)

30. **INSTALL OIL PRESSURE SWITCH**
(See page LU-1)
31. **INSTALL GENERATOR, BRACKET AND ADJUSTING BAR ASSEMBLY**
Torque: 43 N·m (440 kgf·cm, 32 ft·lbf)
32. **INSTALL ENGINE WIRE**
33. **CONNECT OIL LEVEL SENSOR CONNECTOR**
34. **CONNECT OIL PRESSURE SWITCH CONNECTOR**
35. **CONNECT CRANKSHAFT POSITION SWITCH CONNECTOR**
36. **INSTALL CYLINDER HEAD (See page EM-59)**
37. **INSTALL TIMING PULLEYS AND BELT**
(See page EM-21)
38. **REMOVE ENGINE STAND**

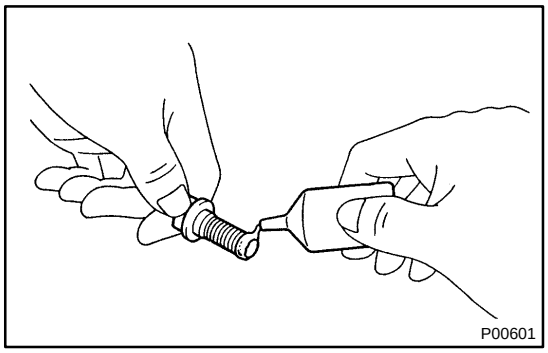

39. **INSTALL DRIVE PLATE**

(a) Apply adhesive to 2 or 3 threads of the bolt end.
Adhesive: Part No. 08833-00070, THREE BOND 1324 or equivalent

(b) Install the front spacer, drive plate and rear plate on the crankshaft.

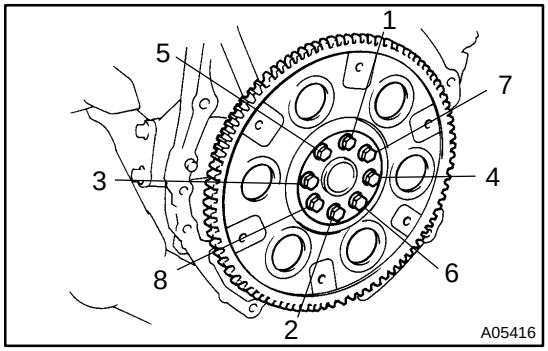

(c) Install and uniformly tighten the 8 bolts in several passes and in the sequence shown.
Torque: 83 N·m (850 kgf·cm, 61 ft·lbf)

EM0ZP-02

REPLACEMENT

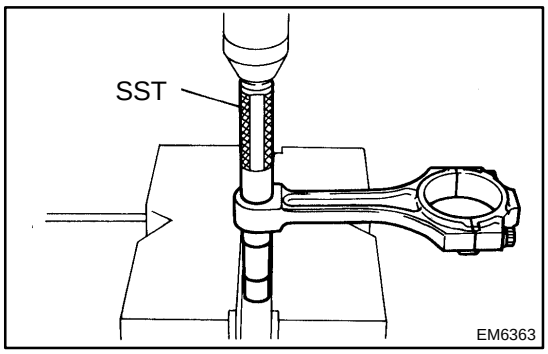

1. REPLACE CONNECTING ROD BUSHING

(a) Using SST and a press, press out the bushing.
SST 09222-30010

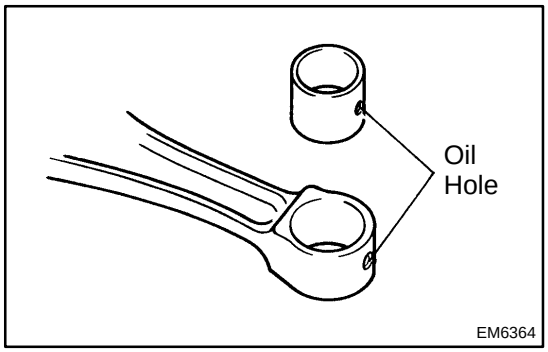

(b) Align the oil holes of a new bushing and the connecting rod.

(c) Using SST and a press, press in the bushing.
SST 09222-30010

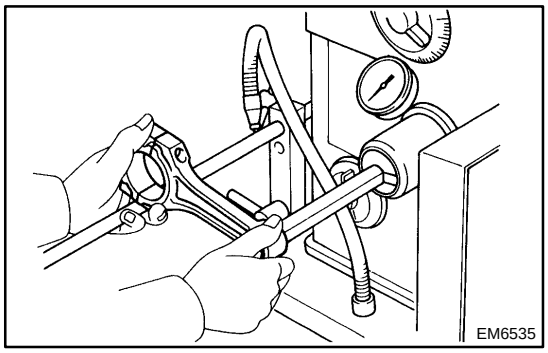

(d) Using a pin hole grinder, hone the bushing to obtain the standard specified clearance (See page EM-93) between the bushing and piston pin.

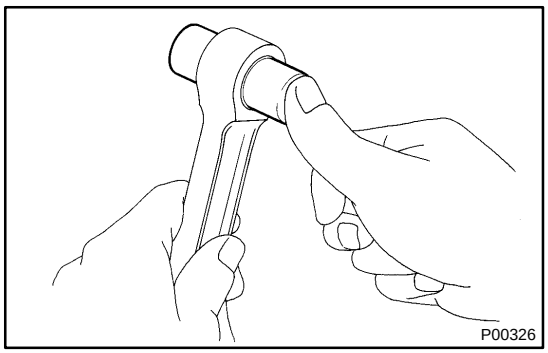

(e) Check the piston pin fit at normal room temperature. Coat the piston pin with engine oil, and push it into the connecting rod with your thumb.

2. REPLACE CRANKSHAFT FRONT OIL SEAL
(See page LU-13)

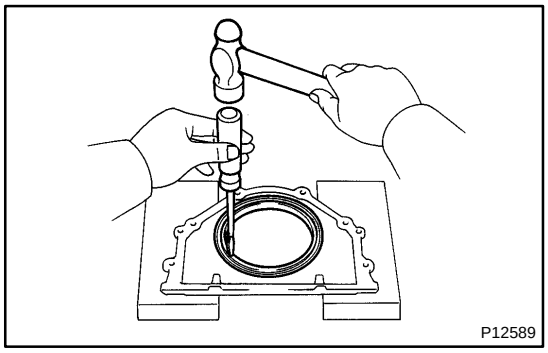

3. REPLACE CRANKSHAFT REAR OIL SEAL

HINT:
There are 2 methods ((a) and (b)) to replace the oil seal which are as follows:

(a) If the rear oil seal retainer is removed from the cylinder block.

(1) Using a screwdriver and hammer, tap out the oil seal.

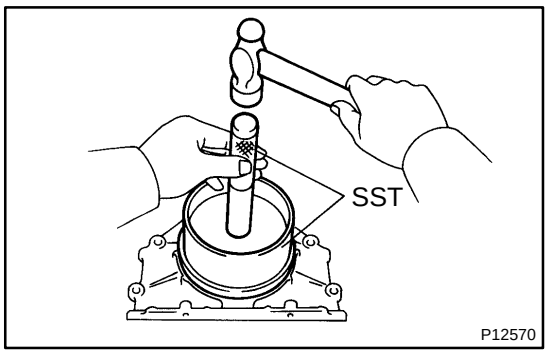

(2) Using SST and a hammer, tap in a new oil seal until its surface is flush with the rear oil seal retainer edge.

SST 09223-15030, 09950-70010 (09951-07100)

(3) Apply MP grease to the oil seal lip.

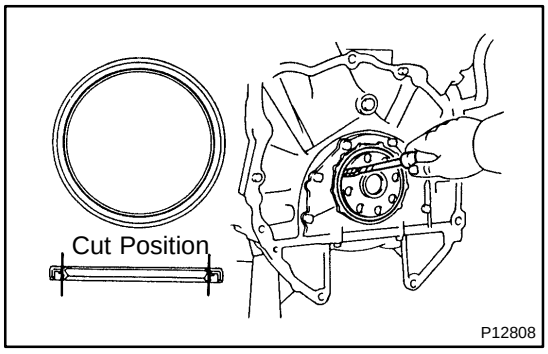

(b) If the rear oil seal retainer is installed to the cylinder block.

(1) Using a knife, cut off the oil seal lip.

(2) Using a screwdriver, pry out the oil seal.

NOTICE:

Be careful not to damage the crankshaft. Tape the screwdriver tip.

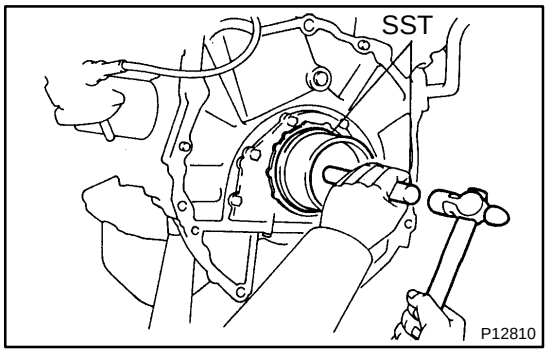

(3) Apply MP grease to a new oil seal lip.

(4) Using SST and a hammer, tap in the oil seal until its surface is flush with the rear oil seal retainer edge.

SST 09223-15030, 09950-70010 (09951-07100)

CYLINDER HEAD

COMPONENTS

EM042-03

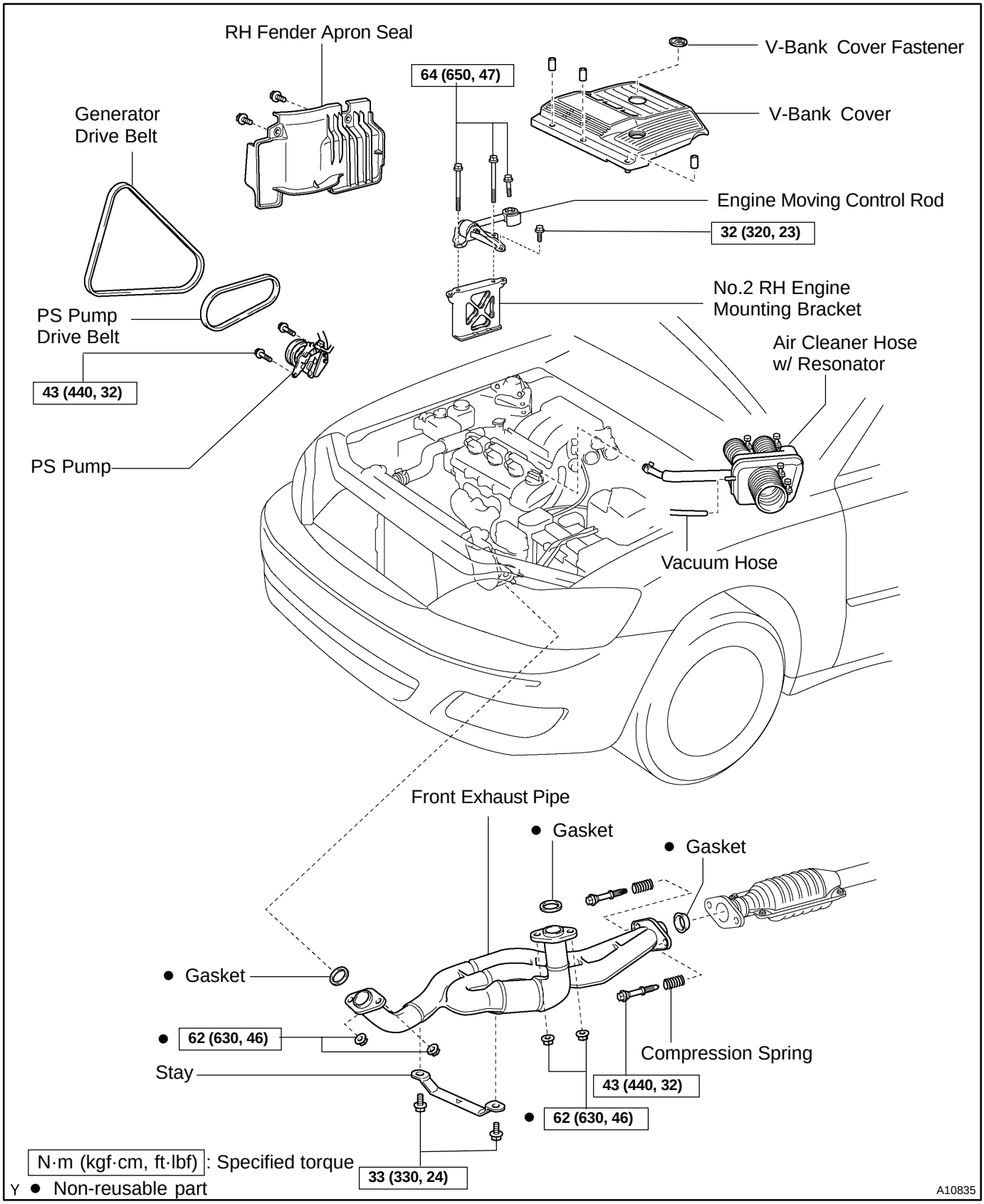

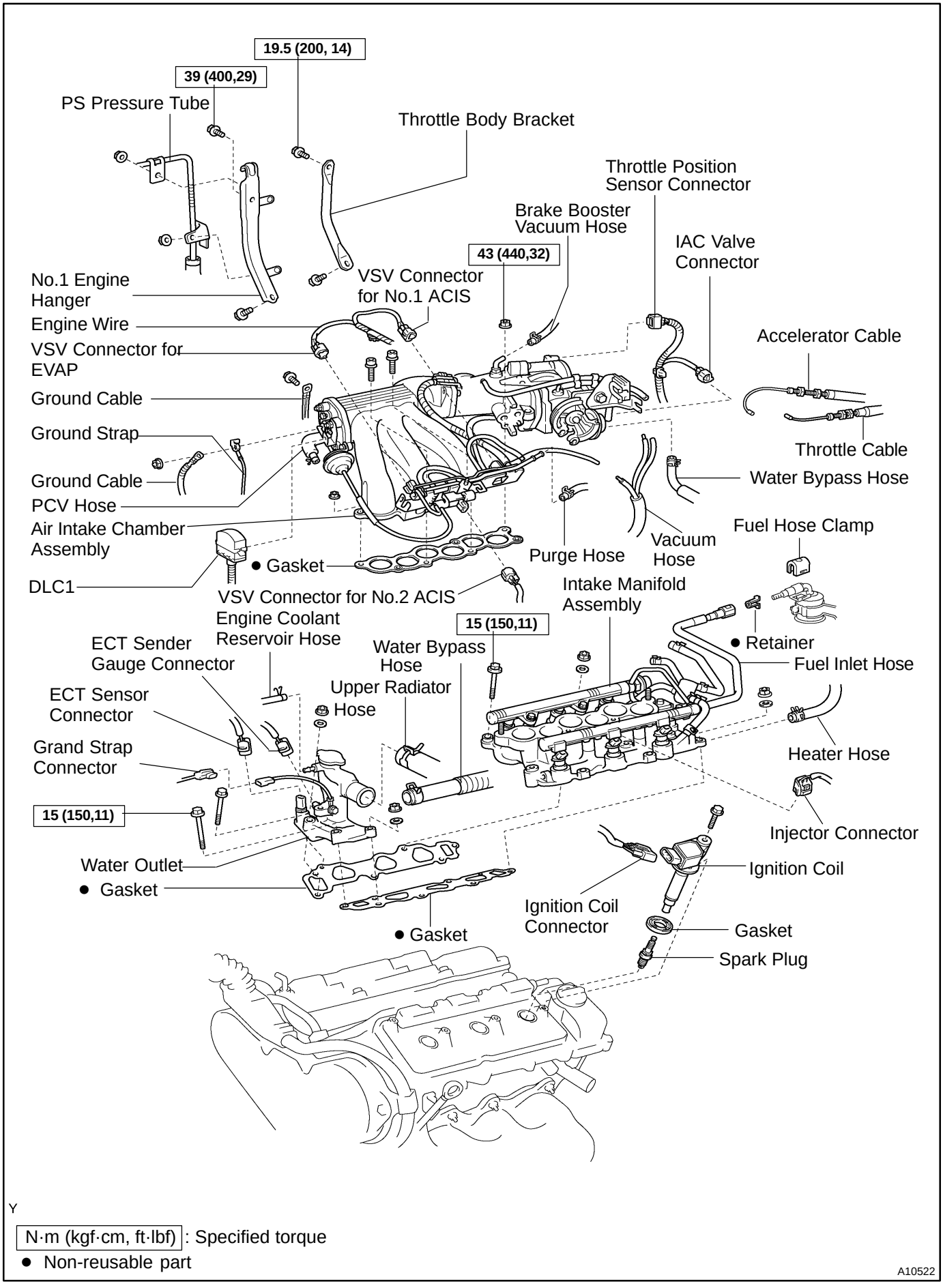
19.5 (200, 14)
39 (400,29)
PS Pressure Tube
Throttle Body Bracket
Throttle Position Sensor Connector
Brake Booster Vacuum Hose
IAC Valve Connector
43 (440,32)
No.1 Engine Hanger
VSV Connector for No.1 ACIS
Engine Wire
VSV Connector for EVAP
Accelerator Cable
Ground Cable
Ground Strap
Throttle Cable
Ground Cable
Water Bypass Hose
PCV Hose
Air Intake Chamber Assembly
Purge Hose
Vacuum Hose
Fuel Hose Clamp
● Gasket
DLC1
VSV Connector for No.2 ACIS
Intake Manifold Assembly
Engine Coolant Reservoir Hose
15 (150,11)
● Retainer
ECT Sender Gauge Connector
Water Bypass Hose
Fuel Inlet Hose
Upper Radiator Hose
ECT Sensor Connector
Grand Strap Connector
Heater Hose
15 (150,11)
Injector Connector
Water Outlet
Ignition Coil
● Gasket
Ignition Coil Connector
● Gasket
Gasket
Spark Plug
Y
N·m (kgf·cm, ft·lbf) : Specified torque
● Non-reusable part
A10522

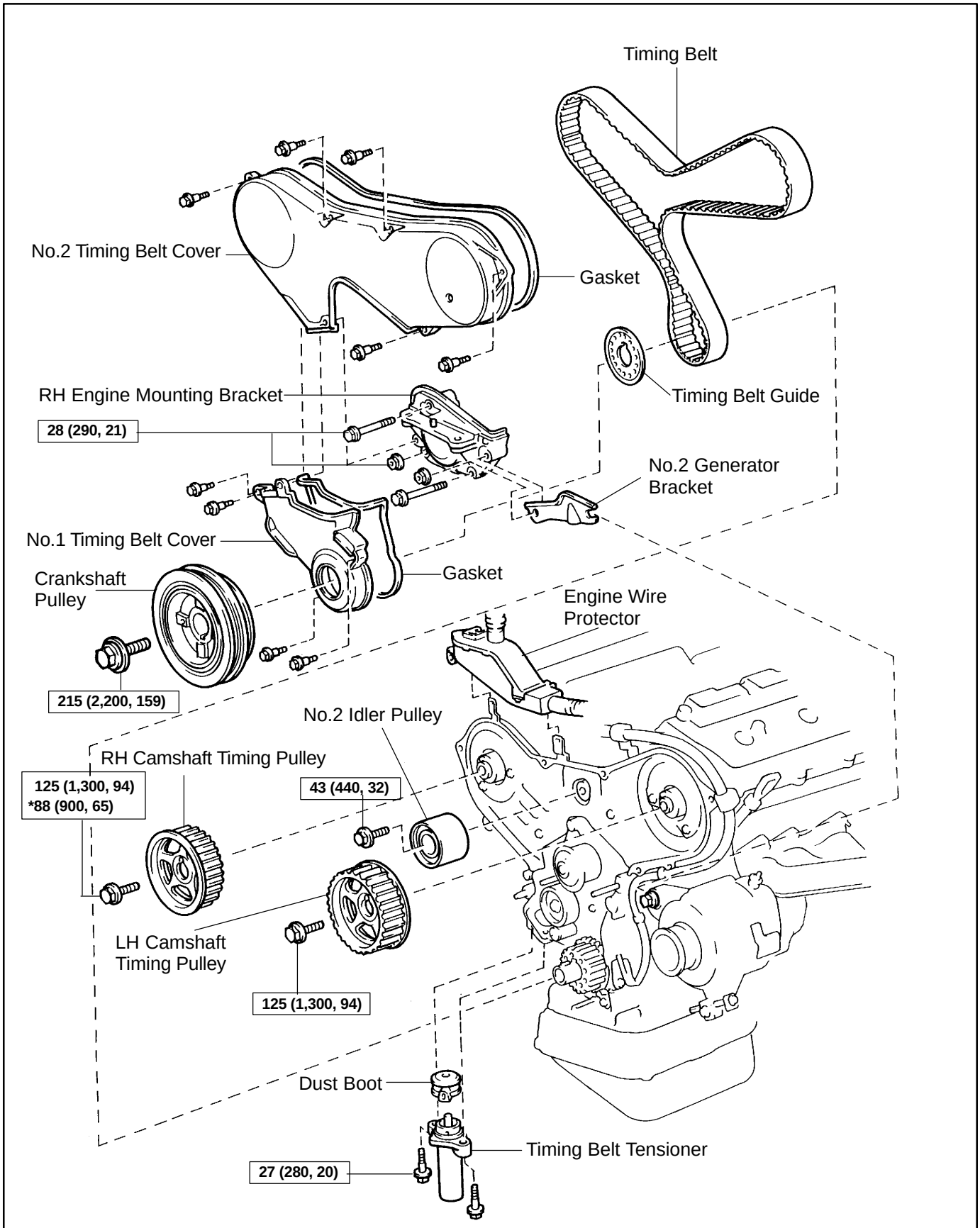

N·m (kgf·cm, ft·lbf) : Specified torque
● Non-reusable part
* For use with SST

A05070

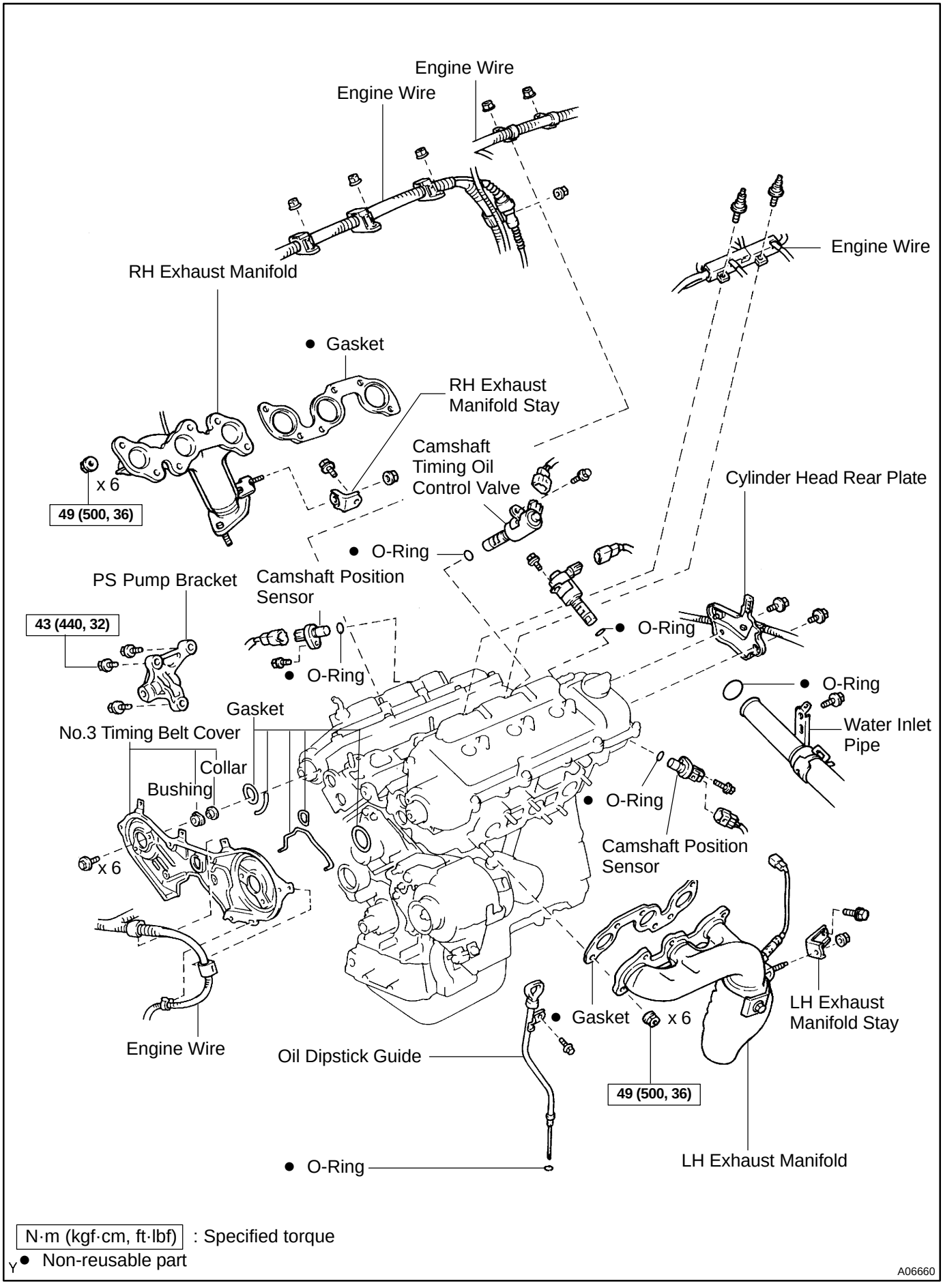
Engine Wire
Engine Wire
Engine Wire
RH Exhaust Manifold
● Gasket
RH Exhaust Manifold Stay
Camshaft Timing Oil Control Valve
x 6
49 (500, 36)
● O-Ring
Cylinder Head Rear Plate
PS Pump Bracket
Camshaft Position Sensor
43 (440, 32)
● O-Ring
● O-Ring
● O-Ring
Gasket
Water Inlet Pipe
No.3 Timing Belt Cover
Collar
Bushing
● O-Ring
Camshaft Position Sensor
x 6
LH Exhaust Manifold Stay
Engine Wire
Oil Dipstick Guide
● Gasket
x 6
49 (500, 36)
LH Exhaust Manifold
● O-Ring
N·m (kgf·cm, ft·lbf) : Specified torque
● Non-reusable part
A06660

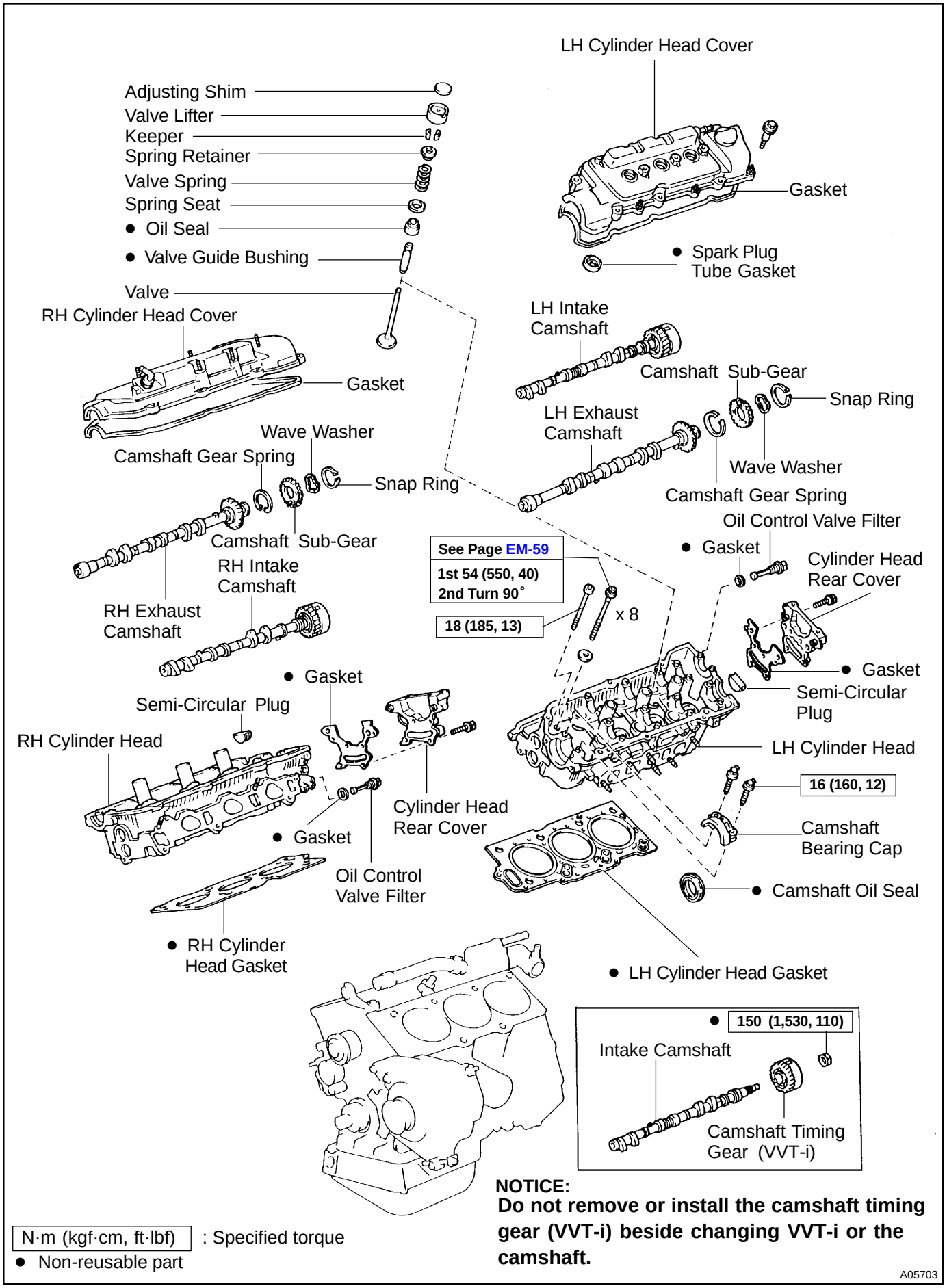
LH Cylinder Head Cover
Adjusting Shim
Valve Lifter
Keeper
Spring Retainer
Valve Spring
Spring Seat
● Oil Seal
● Valve Guide Bushing
Valve
Gasket
● Spark Plug Tube Gasket
RH Cylinder Head Cover
Gasket
LH Intake Camshaft
Camshaft Sub-Gear
Snap Ring
LH Exhaust Camshaft
Wave Washer
Camshaft Gear Spring
Wave Washer
Camshaft Gear Spring
Snap Ring
Camshaft Sub-Gear
Oil Control Valve Filter
● Gasket
Cylinder Head Rear Cover
See Page EM-59
1st 54 (550, 40)
2nd Turn 90°
18 (185, 13)
x 8
RH Intake Camshaft
RH Exhaust Camshaft
● Gasket
Semi-Circular Plug
● Gasket
Semi-Circular Plug
RH Cylinder Head
LH Cylinder Head
16 (160, 12)
Cylinder Head Rear Cover
Camshaft Bearing Cap
● Gasket
Oil Control Valve Filter
● Camshaft Oil Seal
● RH Cylinder Head Gasket
● LH Cylinder Head Gasket
● 150 (1,530, 110)
Intake Camshaft
Camshaft Timing Gear (VVT-i)
N·m (kgf·cm, ft·lbf) : Specified torque
● Non-reusable part
NOTICE:
Do not remove or install the camshaft timing gear (VVT-i) beside changing VVT-i or the camshaft.
A05703

EM0ZF-02

DISASSEMBLY

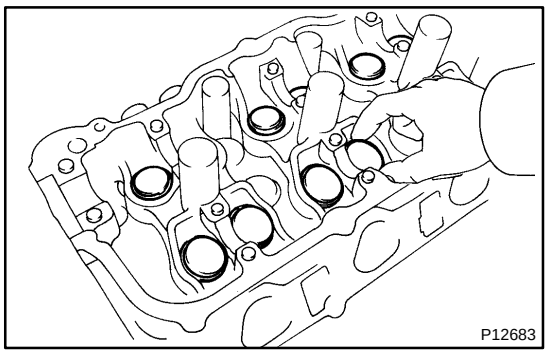

1. REMOVE VALVE LIFTERS AND SHIMS

HINT:

Arrange the valve lifters and shims in the correct order.

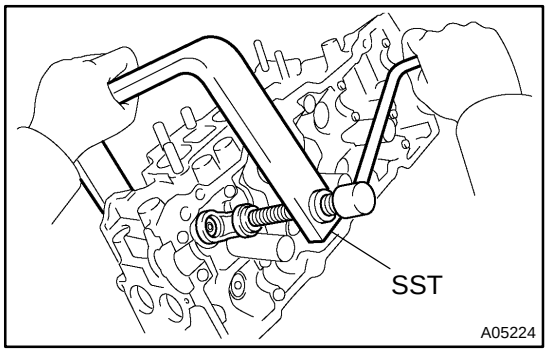

2. REMOVE VALVES

(a) Using SST, compress the valve spring and remove the 2 keepers.

SST 09202-70020 (09202-00010)

(b) Remove the spring retainer, valve spring and valve.

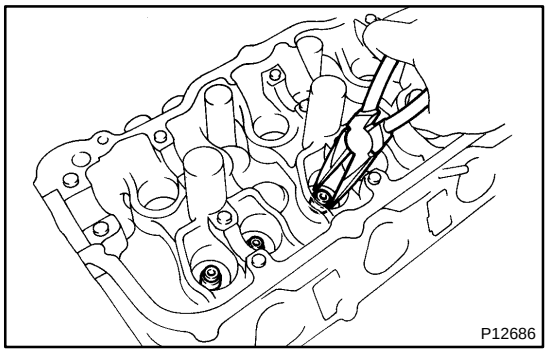

(c) Using needle-nose pliers, remove the oil seal.

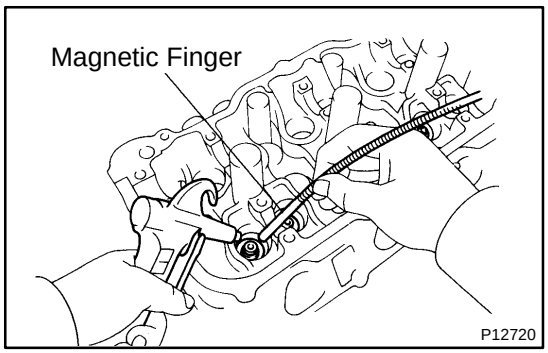

(d) Using compressed air and a magnetic finger, remove the spring seat by blowing air.

HINT:

Arrange the valves, valve springs, spring seats and spring retainers in the correct order.

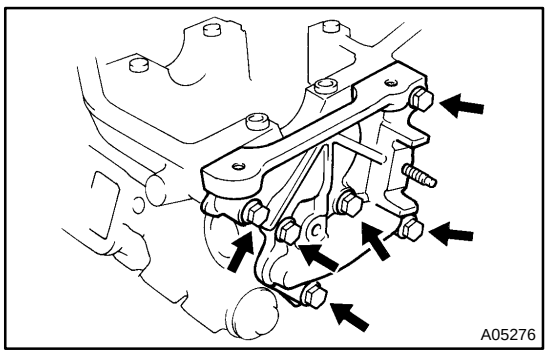

3. REMOVE CYLINDER HEAD REAR COVER

Remove the 6 bolts, rear cover and gasket.

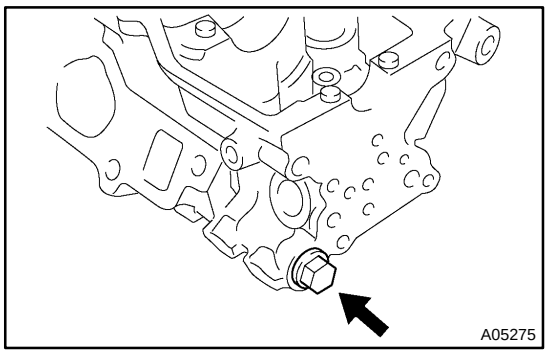

4. REMOVE OIL CONTROL VALVE FILTER

Remove the plug, gasket and valve filter.

EM0ZG-02

INSPECTION

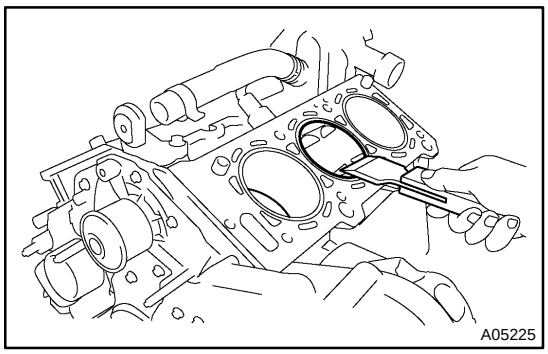

1. CLEAN TOP SURFACES OF PISTONS AND CYLINDER BLOCK

(a) Turn the crankshaft, and bring each piston to top dead center (TDC). Using a gasket scraper, remove all the carbon from the piston top surface.

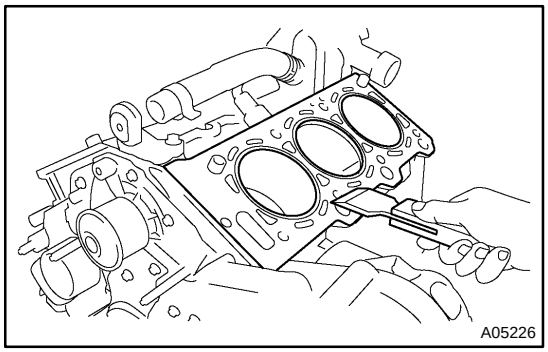

(b) Using a gasket scraper, remove all the gasket material from the cylinder block surface.

(c) Using compressed air, blow carbon and oil from the bolt holes.

CAUTION:

Protect your eyes when using high pressure compressed air.

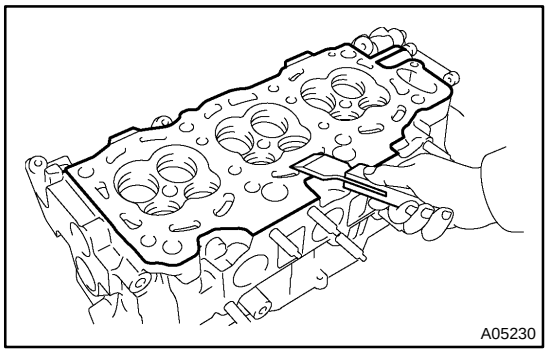

2. REMOVE GASKET MATERIAL

Using a gasket scraper, remove all the gasket material from the cylinder block contact surface.

NOTICE:

Be careful not to scratch the cylinder block contact surface.

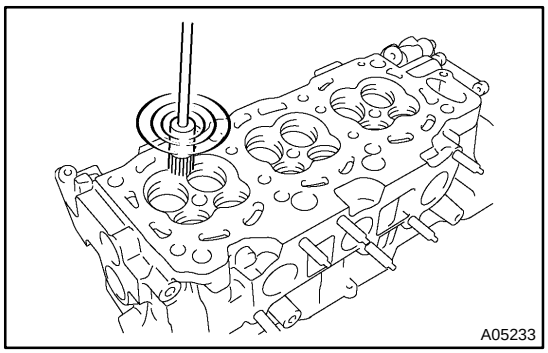

3. CLEAN COMBUSTION CHAMBERS

Using a wire brush, remove all the carbon from the combustion chambers.

NOTICE:

Be careful not to scratch the cylinder block contact surface.

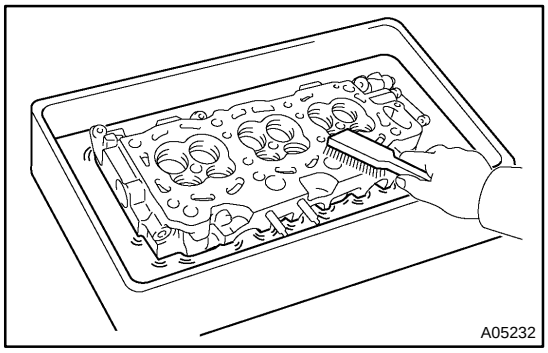

4. CLEAN CYLINDER HEADS

Using a soft brush and solvent, thoroughly clean the cylinder head.

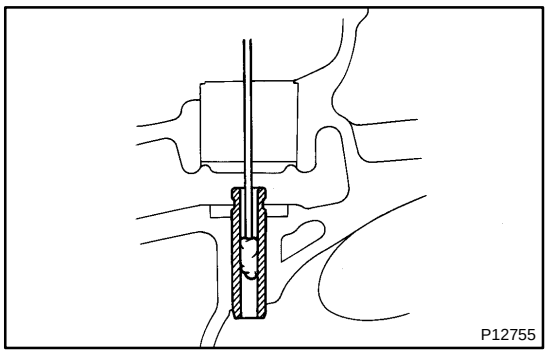

5. CLEAN VALVE GUIDE BUSHINGS

Using a valve guide bushing brush and solvent, clean all the guide bushings.

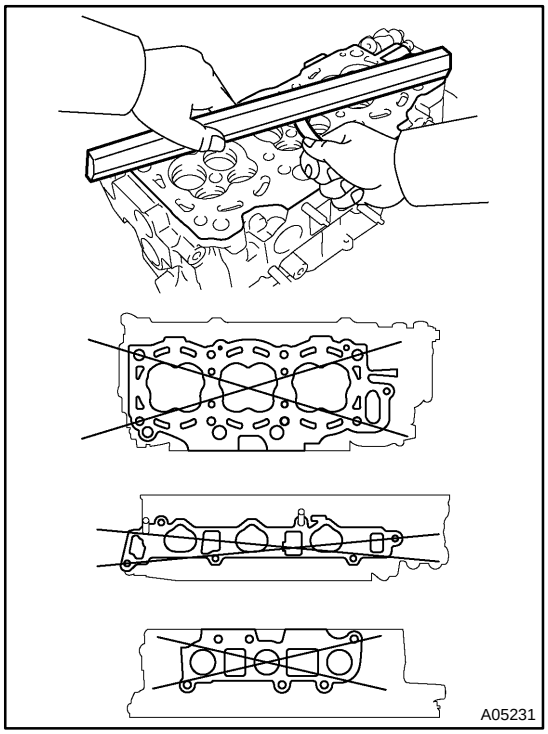

6. INSPECT FOR FLATNESS

Using a precision straight edge and feeler gauge, measure the surfaces contacting the cylinder block and the manifolds for warpage.

Maximum warpage: 0.10 mm (0.0039 in.)

If warpage is greater than maximum, replace the cylinder head.

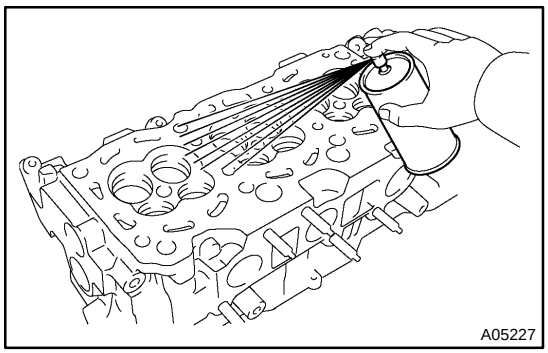

7. INSPECT FOR CRACKS

Using a dye penetrant, check the combustion chamber, intake ports, exhaust ports and cylinder block contact surface for cracks.

If cracked, replace the cylinder head.

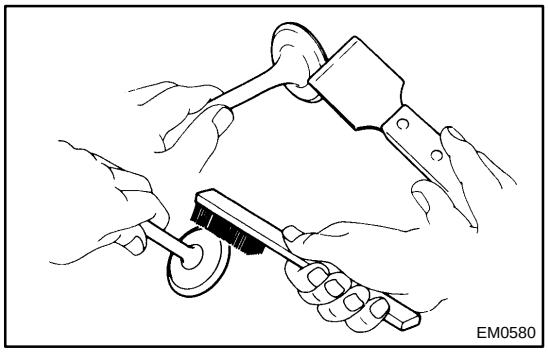

8. CLEAN VALVES

(a) Using a gasket scraper, chip off any carbon from the valve head.

(b) Using a wire brush, thoroughly clean the valve.

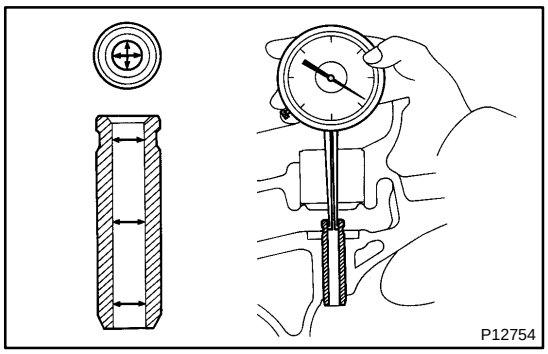

9. INSPECT VALVE STEMS AND GUIDE BUSHINGS

(a) Using a caliper gauge, measure the inside diameter of the guide bushing.

Bushing inside diameter:
5.510 - 5.530 mm (0.2169 - 0.2177 in.)

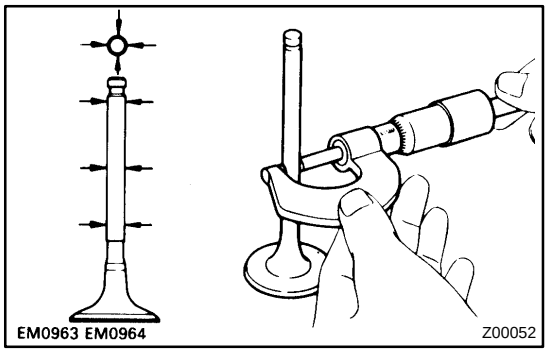

(b) Using a micrometer, measure the diameter of the valve stem.

Valve stem diameter:

Intake	5.470 - 5.485 mm (0.2154 - 0.2159 in.)
Exhaust	5.465 - 5.480 mm (0.2152 - 0.2157 in.)

(c) Subtract the valve stem diameter measurement from the guide bushing guide bushing inside diameter measurement.

Standard oil clearance:

Intake	0.025 - 0.060 mm (0.0010 - 0.0024 in.)
Exhaust	0.030 - 0.065 mm (0.0012 - 0.0026 in.)

Maximum oil clearance:

Intake	0.08 mm (0.0031 in.)
Exhaust	0.10 mm (0.0039 in.)

If the clearance is greater than maximum, replace the valve and guide bushing.

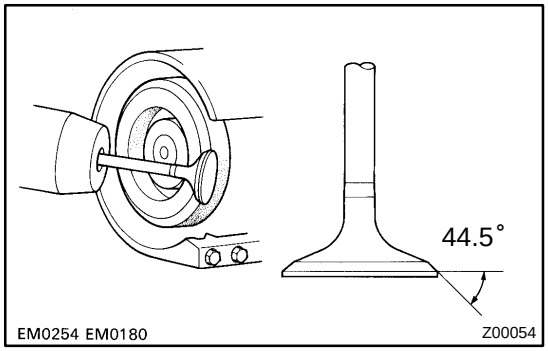

10. INSPECT AND GRIND VALVES

(a) Grind the valve enough to remove pits and carbon.

(b) Check that the valve is ground to the correct valve face angle.

Valve face angle: 44.5°

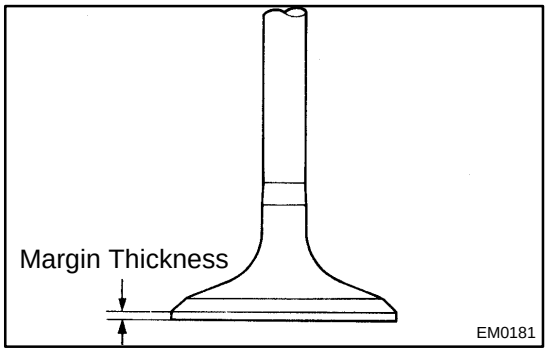

(c) Check the valve head margin thickness.

Standard margin thickness: 1.0 mm (0.039 in.)
Minimum margin thickness: 0.5 mm (0.020 in.)

If the margin thickness is less than minimum, replace the valve.

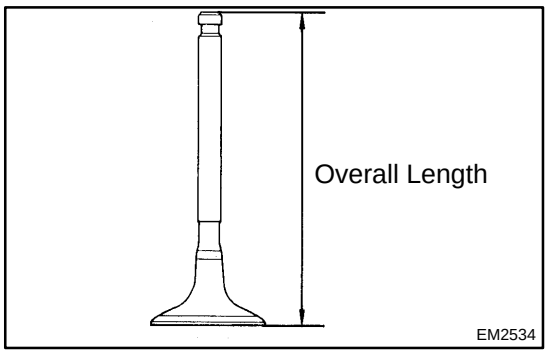

(d) Check the valve overall length.

Standard overall length:

Intake	95.45 mm (3.5779 in.)
Exhaust	95.40 mm (3.7559 in.)

Minimum overall length:

Intake	94.95 mm (3.7382 in.)
Exhaust	94.90 mm (3.7362 in.)

If the overall length is less than minimum, replace the valve.

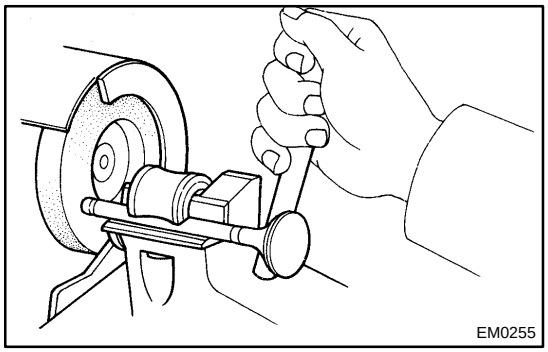

(e) Check the surface of the valve stem tip for wear.

If the valve stem tip is worn, resurface the tip with a grinder or replace the valve.

NOTICE:

Do not grind off more than minimum.

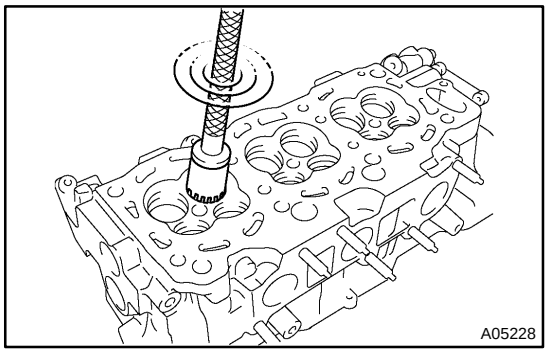

11. INSPECT AND CLEAN VALVE SEATS

(a) Using a 45˚ carbide cutter, resurface the valve seats. Remove only enough metal to clean the seats.

(b) Check the valve seating position.

Apply a light coat of prussian blue (or white lead) to the valve face. Lightly press the valve against the seat. Do not rotate valve.

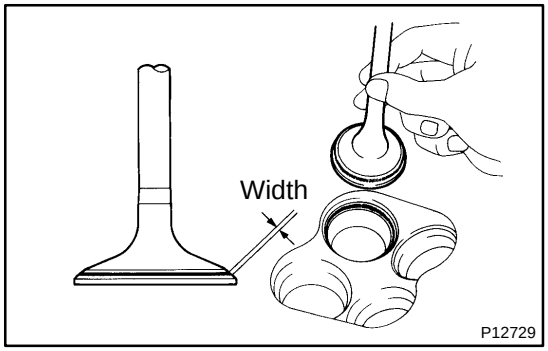

(c) Check the valve face and seat for the following:

- If blue appears 360˚ around the face, the valve is concentric. If not, replace the valve.
- If blue appears 360˚ around the valve seat, the guide and face are concentric. If not, resurface the seat.
- Check that the seat contact is in the middle of the valve face with the following width:

1.0 - 1.4 mm (0.039 - 0.055 in.)

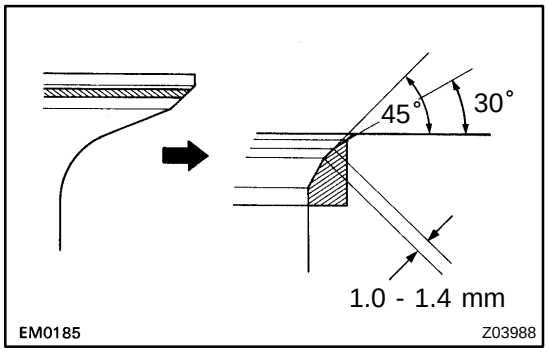

If not, correct the valve seats as follows:

(1) If the seating is too high on the valve face, use 30˚ and 45˚ cutters to correct the seat.

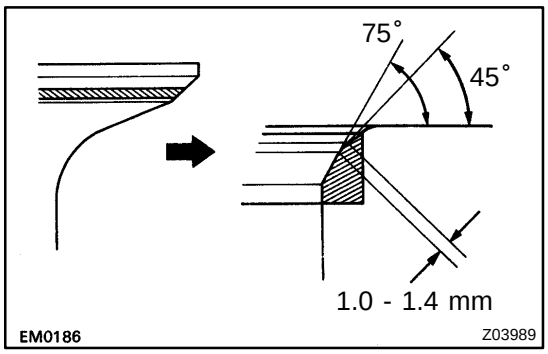

(2) If the seating is too low on the valve face, use 75° and 45° cutters to correct the seat.

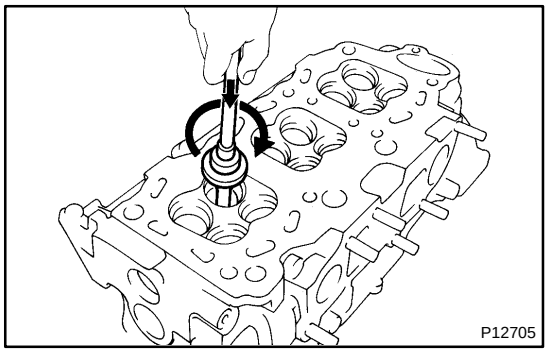

(d) Hand-lap the valve and valve seat with an abrasive compound.
(e) After hand-lapping, clean the valve and valve seat.

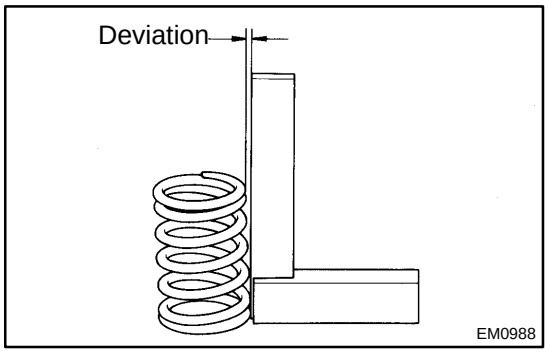

12. INSPECT VALVE SPRINGS

(a) Using a steel square, measure the deviation of the valve spring.

Maximum deviation: 2.0 mm (0.079 in.)

If the deviation is greater than maximum, replace the valve spring.

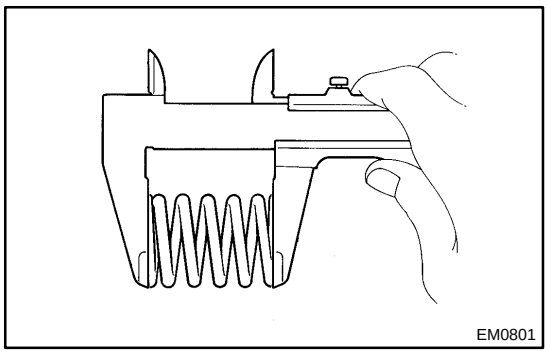

(b) Using vernier calipers, measure the free length of the valve spring.

Free length: 45.50 mm (1.7913 in.)

If the free length is not as specified, replace the valve spring.

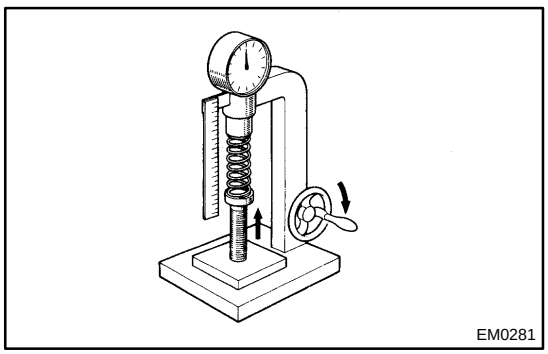

(c) Using a spring tester, measure the tension of the valve spring at the specified installed length.

Installed tension:
186 - 206 N (19.0 - 21.0 kgf, 41.9 - 46.3 lbf)
at 33.8 mm (1.331 in.)

If the installed tension is not as specified, replace the valve spring.

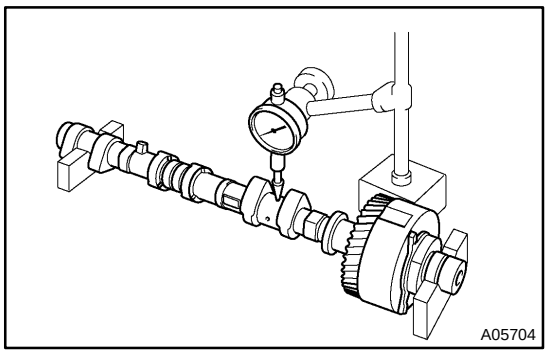

13. INSPECT CAMSHAFT FOR RUNOUT

(a) Place the camshaft on V-blocks.

(b) Using a dial indicator, measure the circle runout at the center journal.

Maximum circle runout: 0.06 mm (0.0024 in.)

If the circle runout is greater than maximum, replace the camshaft.

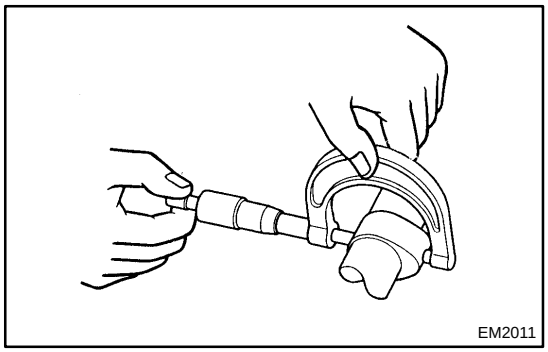

14. INSPECT CAM LOBES

Using a micrometer, measure the cam lobe height.

Standard cam lobe height:

Intake	42.932 - 43.032 mm (1.6902 - 1.6942 in.)
Exhaust	42.764 - 42.864 mm (1.6836 - 1.6876 in.)

Minimum cam lobe height:

Intake	42.78 mm (1.6842 in.)
Exhaust	42.61 mm (1.6776 in.)

If the cam lobe height is less than minimum, replace the camshaft.

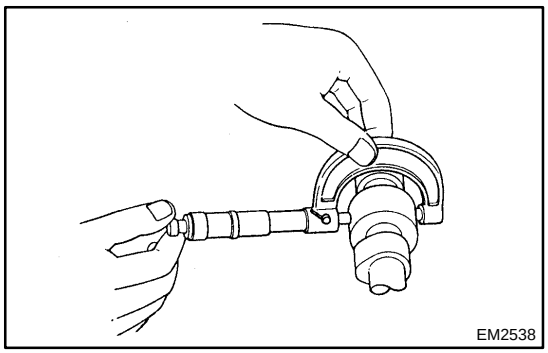

15. INSPECT CAMSHAFT JOURNALS

Using a micrometer, measure the journal diameter.

Journal diameter:

26.959 - 26.975 mm (1.0613 - 1.0620 in.)

If the journal diameter is not as specified, check the oil clearance.

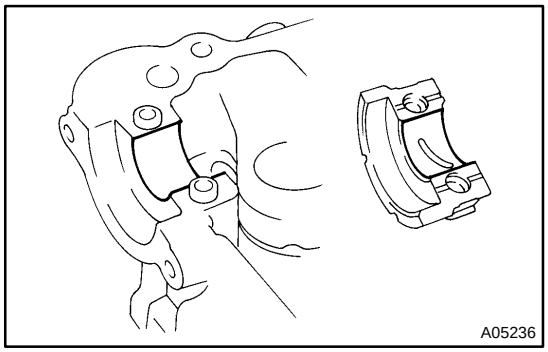

16. INSPECT CAMSHAFT BEARINGS

Check that bearings for flaking and scoring.

If the bearings are damaged, replace the bearing caps and cylinder head as a set.

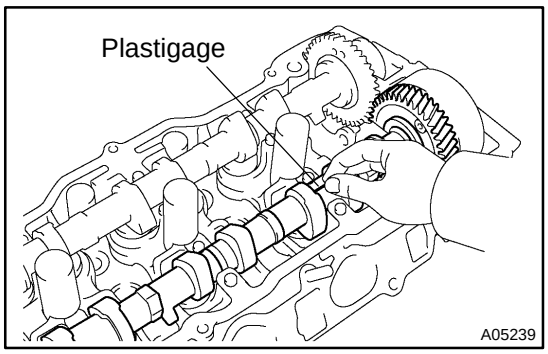

17. INSPECT CAMSHAFT JOURNAL OIL CLEARANCE

(a) Clean the bearing caps and camshaft journals.

(b) Place the camshafts on the cylinder head.

(c) Lay a strip of Plastigage across each of the camshaft journal.

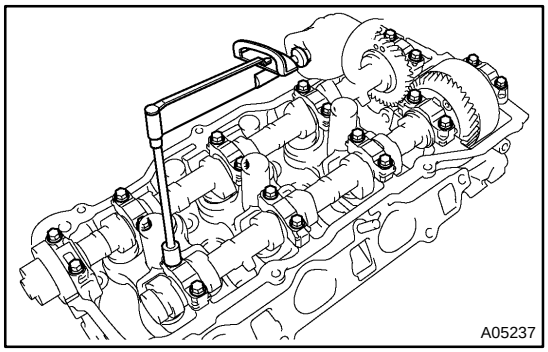

(d) Install the bearing caps. (See page EM-59)

Torque: 16 N·m (160 kgf·cm, 12 ft·lbf)

NOTICE:

Do not turn the camshaft.

(e) Remove the bearing caps.

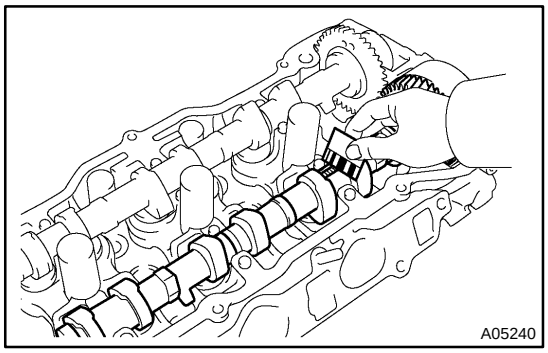

(f) Measure the Plastigage at its widest point.

Standard oil clearance:

Intake	0.035 - 0.072 mm (0.0014 - 0.0028 in.)
Exhaust	0.025 - 0.062 mm (0.0010 - 0.0024 in.)

Maximum oil clearance:

Intake	0.10 mm (0.0039 in.)
Exhaust	0.09 mm (0.0035 in.)

If the oil clearance is greater than maximum, replace the camshaft. If necessary, replace the bearing caps and cylinder head as a set.

(g) Completely remove the Plastigage.

(h) Remove the camshafts.

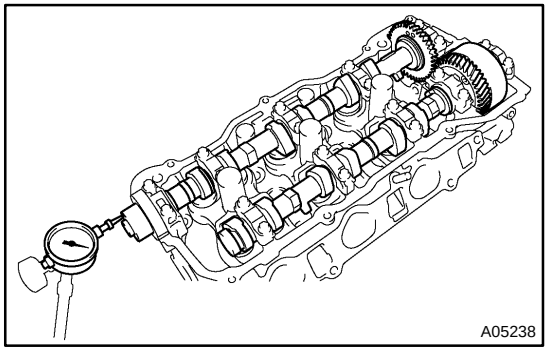

18. INSPECT CAMSHAFT THRUST CLEARANCE

(a) Install the camshafts. (See page EM-59)

(b) Using a dial indicator, measure the thrust clearance while moving the camshaft back and forth.

Standard thrust clearance:

0.040 - 0.090 mm (0.0016 - 0.0035 in.)

Maximum thrust clearance: 0.12 mm (0.0047 in.)

If the thrust clearance is greater than maximum, replace the camshaft. If necessary, replace the bearing caps and cylinder head as a set.

(c) Remove the camshafts.

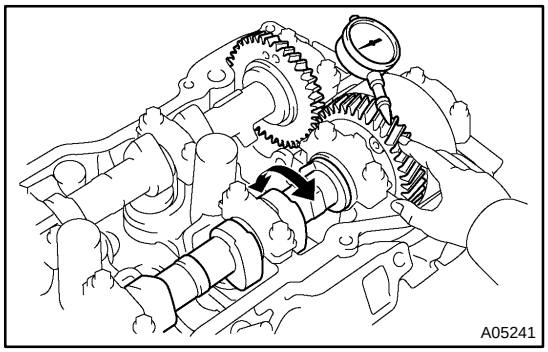

19. INSPECT CAMSHAFT GEAR BACKLASH

(a) Install the camshafts without installing the exhaust cam sub-gear (See page EM-59).

(b) Using a dial indicator, measure the backlash.

Standard backlash:
0.020 - 0.200 mm (0.0008 - 0.0079 in.)
Maximum backlash: 0.30 mm (0.0188 in.)

If the backlash is greater then maximum, replace the camshafts.

(c) Remove the camshafts.

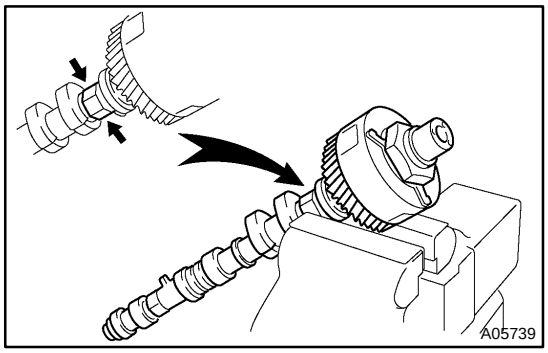

20. INSPECT CAMSHAFT TIMING GEAR (VVT-i)

(a) Mount the hexagon wrench head portion of the camshaft in a vise.

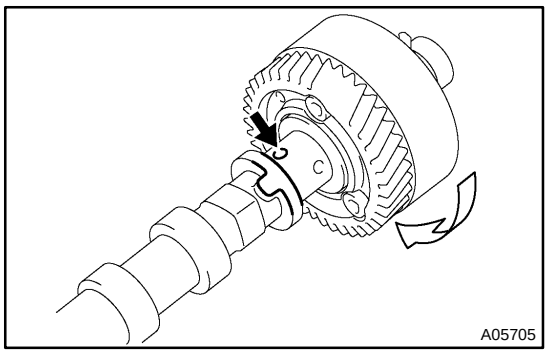

(b) Check that VVT-i will not turn.

(c) Cover the port except the port on the advance angle side (nearest to the convex portion) shown in the illustration with the vinyl tape.

(d) Using the air gun, apply about 100 kPa (1 kgf/cm^3, 14 psi) of air pressure to the port on the advance side shown in the illustration.

NOTICE:

When the oil is splashed, wipe it off with a shop lug and the likes.

HINT:

Perform this in order to release the lock pin for the maximum delay angle locking.

Standard: Must turn

HINT:

Depending on the air pressure, VVT-i will turn to the advance angle side without applying force by hand. Also, under the condition that the pressure can be hardly applied because of the air leakage from the port, there may be the case that the lock pin could be hardly released.

(e) Under the condition of (d), turn VVT-i to the advance angle side (the white arrow marked direction in the illustration) with your hand.

(f) Except the position where the lock pin meets at the maximum delay angle, let VVT-i turn back and forth and check the movable range and that there is no disturbance.
Standard: Movable smoothly in the range about 30°

(g) Turn VVT-i with your hand and lock it at the maximum delay angle position.

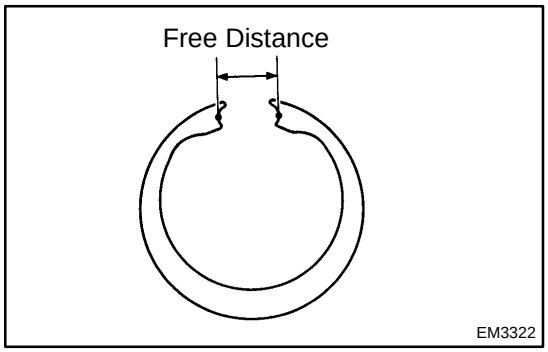

21. INSPECT CAMSHAFT GEAR SPRING

Using vernier calipers, measure the free distance between the spring ends.

Free distance: 18.2 - 18.8 mm (0.712 - 0.740 in.)

If the free distance is not as specified, replace the gear spring.

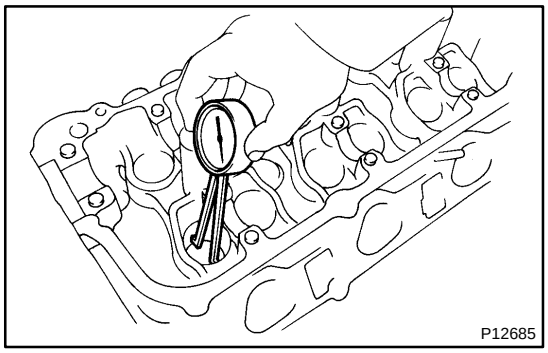

22. INSPECT VALVE LIFTERS AND LIFTER BORES

(a) Using a caliper gauge, measure the lifter bore diameter of the cylinder head.
Lifter bore diameter:
31.000 - 31.018 mm (1.2205 - 1.2212 in.)

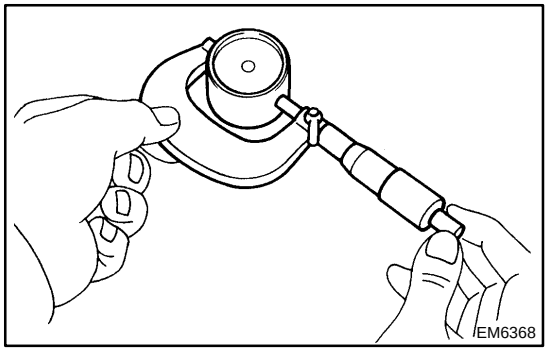

(b) Using a micrometer, measure the lifter diameter.
Lifter diameter:
30.966 - 30.976 mm (1.2191 - 1.2195 in.)

(c) Subtract the lifter diameter measurement from the lifter bore diameter measurement.
Standard oil clearance:
0.024 - 0.050 mm (0.0009 - 0.0020 in.)
Maximum oil clearance: 0.07 mm (0.0028 in.)

If the oil clearance is greater than maximum, replace the lifter. If necessary, replace the cylinder head.

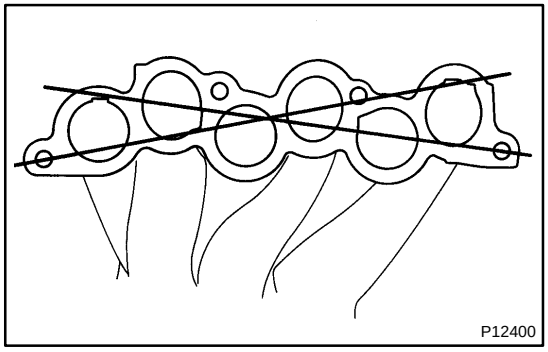

23. INSPECT AIR INTAKE CHAMBER

Using a precision straight edge and feeler gauge, measure the surface contacting the intake manifold for warpage.

Maximum warpage: 0.10 mm (0.0039 in.)

If warpage is greater than maximum, replace the chamber.

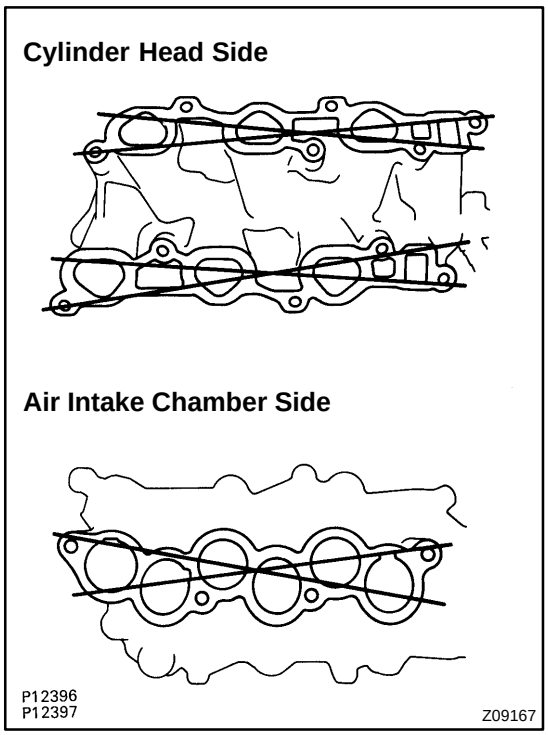

24. INSPECT INTAKE MANIFOLD

Using a precision straight edge and feeler gauge, measure the surface contacting the cylinder head and air intake chamber for warpage.

Maximum warpage:

Air intake chamber side	0.15 mm (0.0059 in.)
Cylinder head side	0.08 mm (0.0031 in.)

If warpage is greater than maximum, replace the manifold.

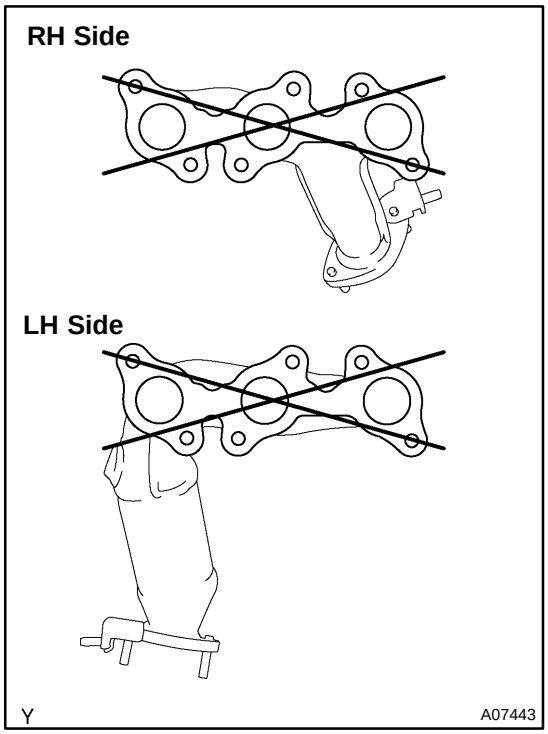

25. INSPECT EXHAUST MANIFOLDS

Using a precision straight edge and feeler gauge, measure the surface contacting the cylinder head for warpage.

Maximum warpage: 0.50 mm (0.0196 in.)

If warpage is greater than maximum, replace the manifold.

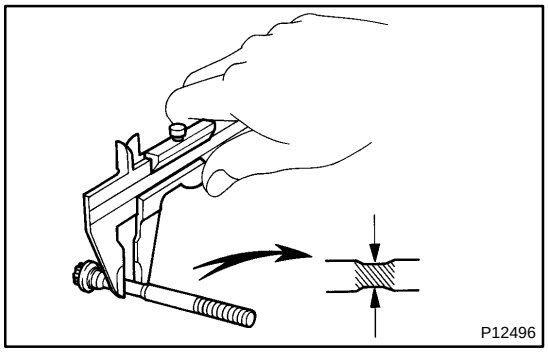

26. INSPECT 12 POINTED HEAD CYLINDER HEAD BOLTS

Using vernier calipers, measure the tension portion diameter of the bolt.

Standard outside diameter:
8.95 - 9.05 mm (0.3524 - 0.3563 in.)
Minimum outside diameter: 8.75 mm (0.3445 in.)

If the diameter is less than minimum, replace the bolt.

EM0ZJ-02

INSTALLATION

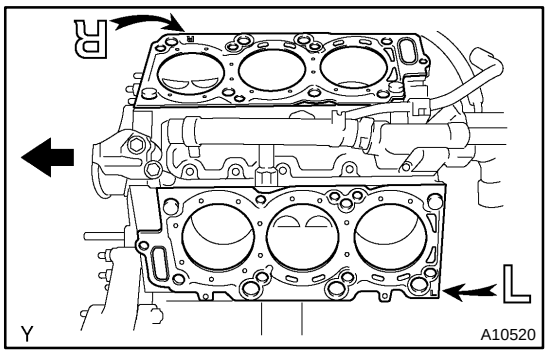

1. PLACE CYLINDER HEAD ON CYLINDER BLOCK

(a) Place 2 new cylinder head gaskets in position on the cylinder block.

NOTICE:

Be careful of the installation direction.

(b) Place the 2 cylinder heads in position on the cylinder head gaskets.

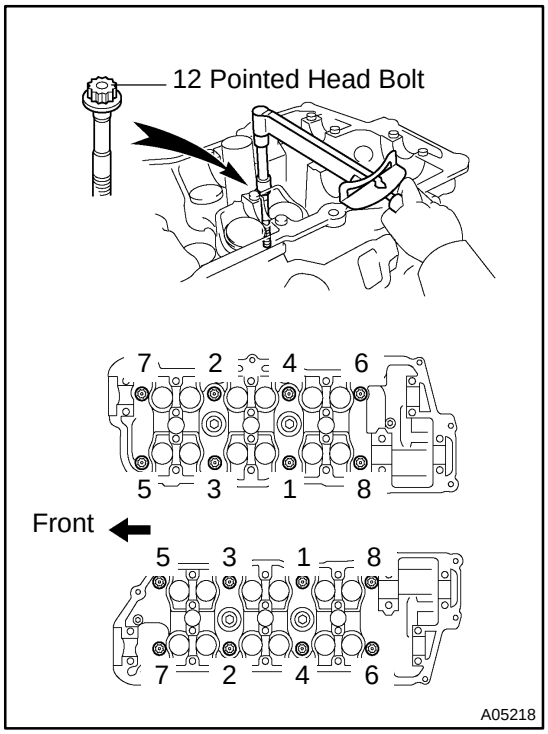

2. INSTALL 12 POINTED HEAD CYLINDER HEAD BOLTS

HINT:

- The cylinder head bolts are tightened in 2 progressive steps (steps (c) and (e)).
- If any bolt is broken or deformed, replace it.

(a) Apply a light coat of engine oil on the threads and under the heads of the cylinder head bolts.

(b) Install the plate washer to the cylinder head bolt.

(c) Install and uniformly tighten the cylinder head bolts on each cylinder head in several passes and in the sequence shown, then repeat for the other side, as shown.

Torque: 54 N·m (550 kgf·cm, 40 ft·lbf)

If any of the cylinder head bolts does not meet the torque specification, replace the cylinder head bolt.

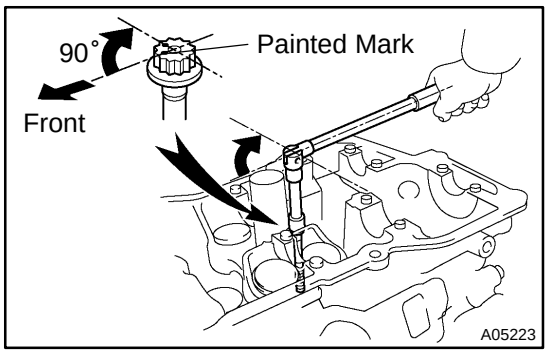

(d) Mark the front of the cylinder head bolt head with paint.

(e) Retighten the cylinder head bolts by 90° in the numerical order shown.

(f) Check that the painted mark is now at a 90° angle to the front.

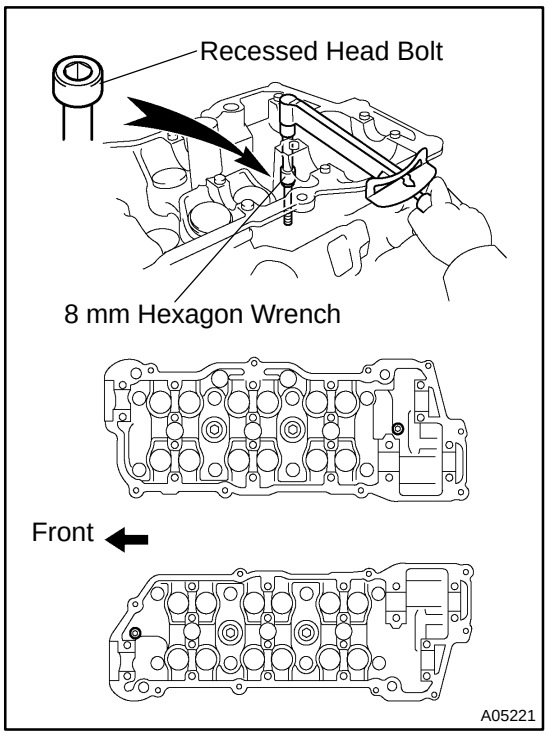

3. INSTALL RECESSED HEAD CYLINDER HEAD BOLTS

(a) Apply a light coat of engine oil on the threads and under the heads of the cylinder head bolts.

(b) Using an 8 mm hexagon wrench, install the cylinder head bolt on each cylinder head, then repeat for the other side, as shown.

Torque: 18.5 N·m (185 kgf·cm, 13 ft·lbf)

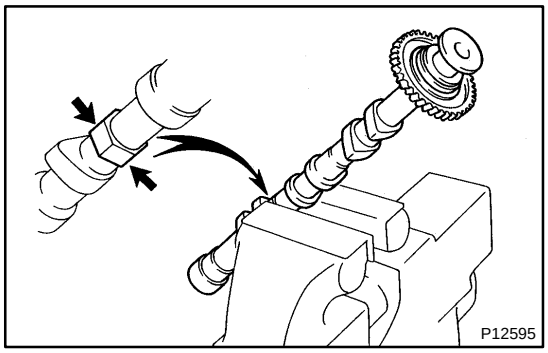

4. ASSEMBLE EXHAUST CAMSHAFTS

(a) Mount the hexagonal wrench head portion of the camshaft in a vise.

NOTICE:

Be careful not to damage the camshaft.

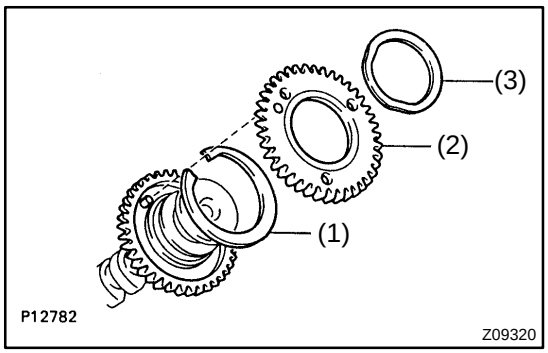

(b) Install the camshaft gear spring (1) and camshaft subgear (2).

HINT:

Attach the pins on the gears to the gear spring ends.

(c) Install the wave washer (3).

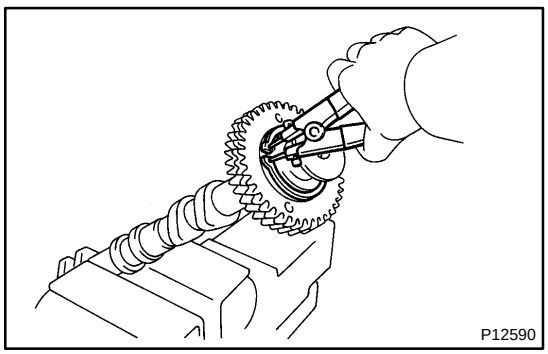

(d) Using snap ring pliers, install the snap ring.

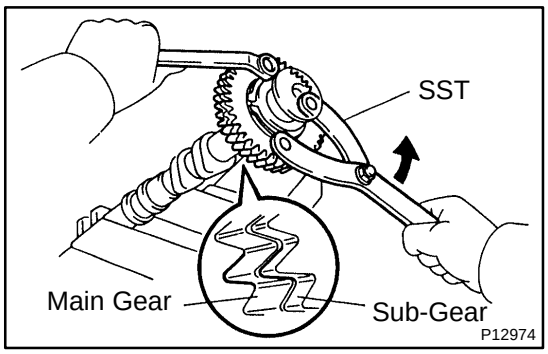

(e) Using SST, align the holes of the camshaft main gear and sub-gear by turning camshaft sub-gear counterclockwise, and temporarily install a service bolt.
SST 09960-10010 (09962-01000, 09963-00500)

(f) Align the gear teeth of the main gear and sub-gear, and tighten the service bolt.

5. INSTALL CAMSHAFTS OF RH CYLINDER HEAD

NOTICE:

Since the thrust clearance of the camshaft is small, the camshaft must be kept leveled while it is being installed. If the camshaft is not kept leveled, the portion of the cylinder head receiving the shaft thrust may crack or be damaged, causing the camshaft to seize or break. To avoid this, the following steps should be carried out.

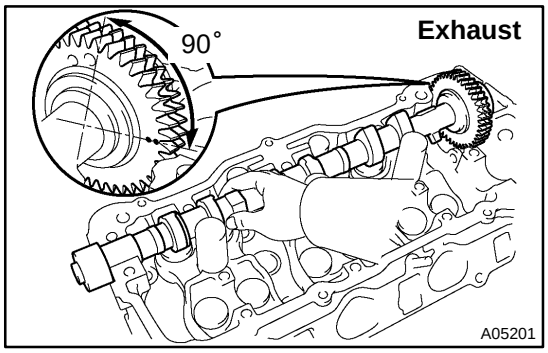

(a) Install the exhaust camshaft.
(1) Apply new engine oil to the thrust portion and journal of the camshaft.
(2) Place the exhaust camshaft at 90˚ angle of timing mark (2 dot marks) on the cylinder head.
(3) Apply MP grease to a new oil seal lip.

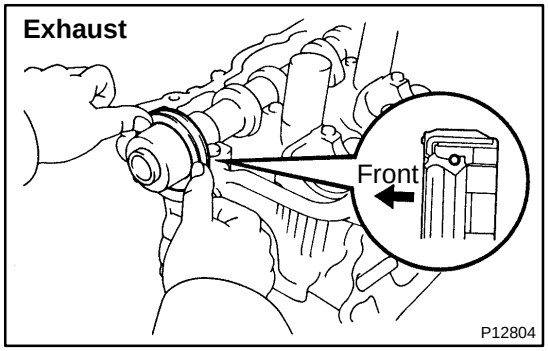

(4) Install the oil seal to the camshaft.

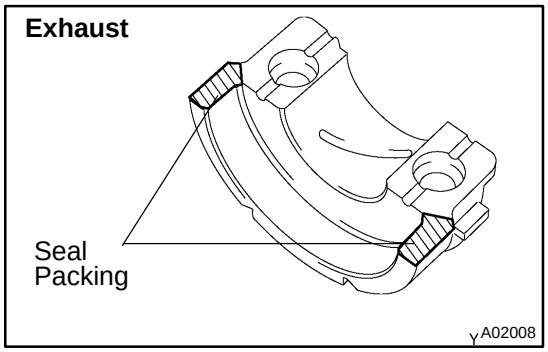

(5) Remove any old packing (FIPG) material.
(6) Apply seal packing to the No.1 bearing cap as shown.

Seal packing: Part No. 08826-00080 or equivalent

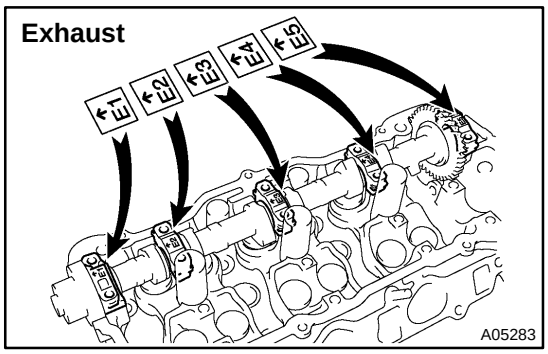

(b) Install the 5 bearing caps in their proper locations.

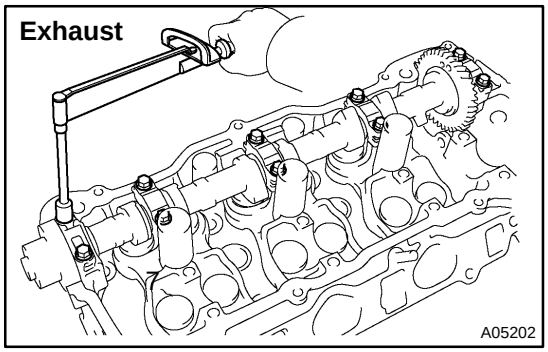

(c) Apply a light coat of engine oil on the threads and under the heads of the bearing cap bolts.

(d) Install and uniformly tighten the 10 bearing cap bolts in several passes and in the sequence shown.

Torque: 16 N·m (160 kgf·cm, 12 ft·lbf)

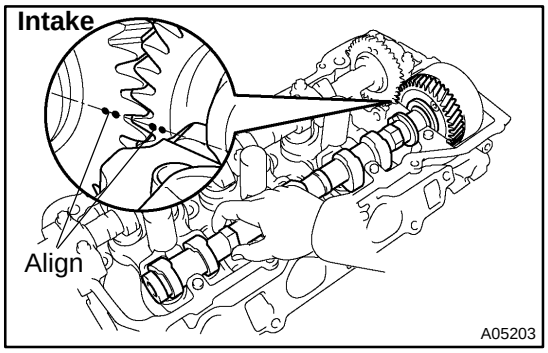

(e) Install the Intake camshaft.

(1) Apply new engine oil to the thrust portion and journal of the camshaft.

(2) Align the timing marks (2 dot marks) of the camshaft drive and driven gears.

(3) Place the intake camshaft on the cylinder head.

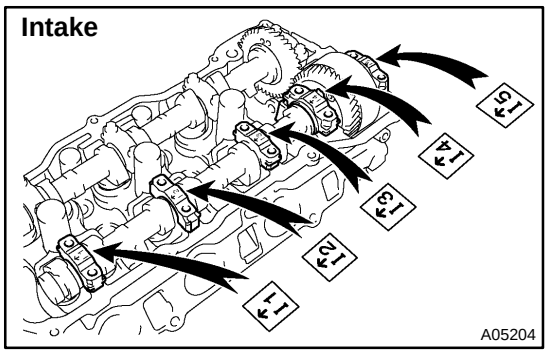

(4) Install the 5 bearing caps in their proper locations.

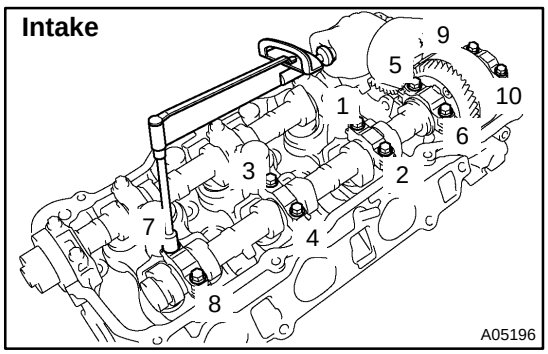

(5) Apply a light coat of engine oil on the threads and under the heads of the bearing cap bolts.

(6) Install and uniformly tighten the 10 bearing cap bolts in several passes and in the sequence shown.

Torque: 16 N·m (160 kgf·cm, 12 ft·lbf)

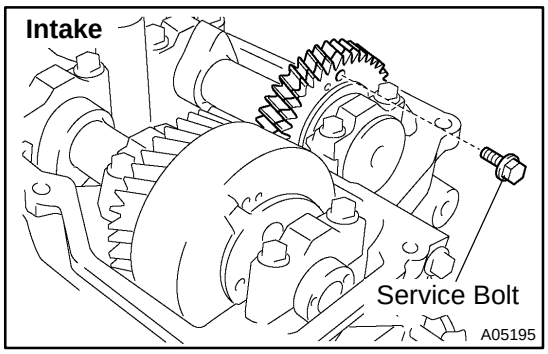

(7) Remove the service bolt.

6. INSTALL CAMSHAFTS OF LH CYLINDER HEAD

NOTICE:

Since the thrust clearance of the camshaft is small, the camshaft must be kept leveled while it is being installed. If the camshaft is not kept leveled, the portion of the cylinder head receiving the shaft thrust may crack or be damaged, causing the camshaft to seize or break. To avoid this, the following steps should be carried out.

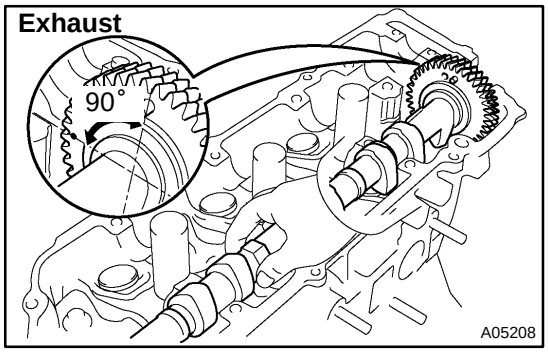

(a) Install the exhaust camshaft.

(1) Apply new engine oil to the thrust portion and journal of the camshaft.

(2) Place the exhaust camshaft at 90° angle of timing mark (1 dot mark) on the cylinder head.

(3) Apply MP grease to a new oil seal lip.

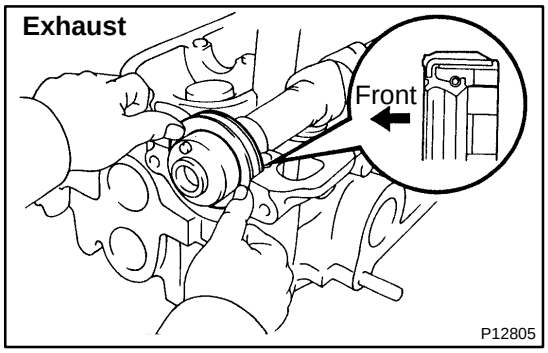

(4) Install the oil seal to the camshaft.

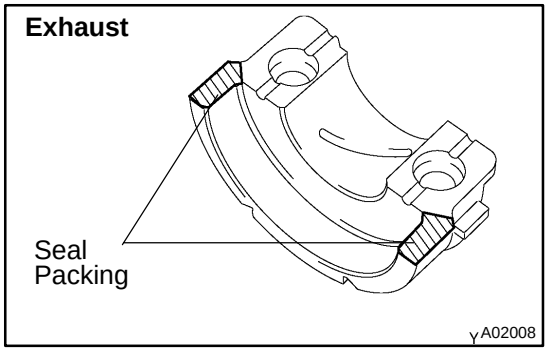

(5) Remove any old packing (FIPG) material.

(6) Apply seal packing to the No.1 bearing cap as shown.

Seal packing: Part No. 08826-00080 or equivalent

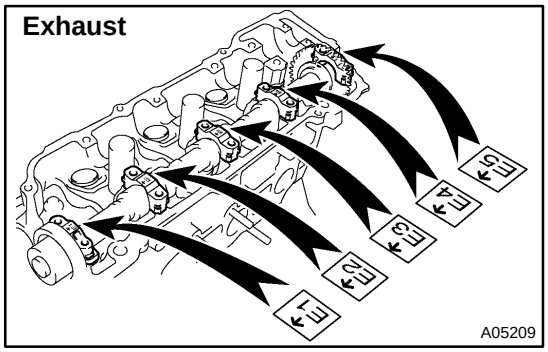

(7) Install the 5 bearing caps in their proper locations.

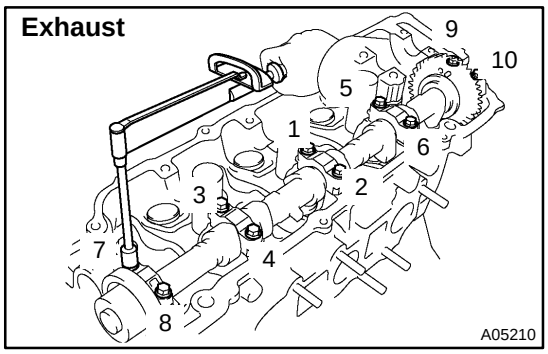

(8) Apply a light coat of engine oil on the threads and under the heads of the bearing cap bolts.
(9) Install and uniformly tighten the 10 bearing cap bolts in several passes and in the sequence shown.

Torque: 16 N·m (160 kgf·cm, 12 ft·lbf)

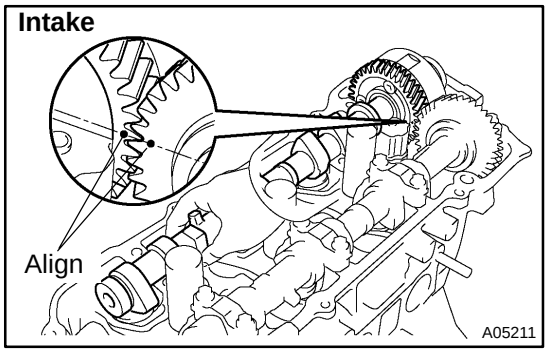

(b) Install the intake camshaft.
(1) Apply new engine oil to the thrust portion and journal of the camshaft.
(2) Align the timing marks (1 dot mark) of the camshaft drive and driven gears.
(3) Place the intake camshaft on the cylinder head.

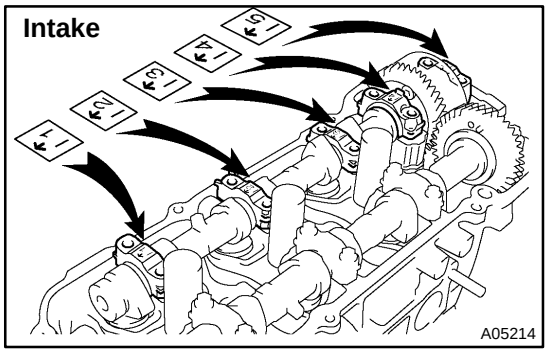

(4) Install the 5 bearing caps in their proper locations.

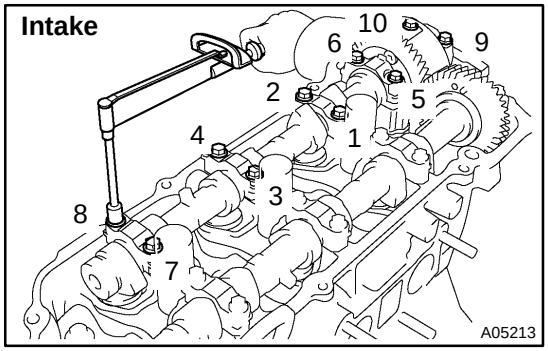

(5) Apply a light coat of engine oil on the threads and under the heads of bearing cap bolts.
(6) Install and uniformly tighten the 10 bearing cap bolts in several passes and in the sequence shown.

Torque: 16 N·m (160 kgf·cm, 12 ft·lbf)

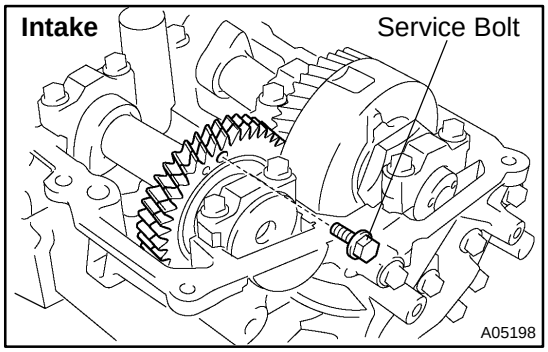

(7) Remove the service bolt.

7. CHECK AND ADJUST VALVE CLEARANCE
(See page EM-4)

Turn the camshaft and position the cam lobe upward, and check and adjust the valve clearance.

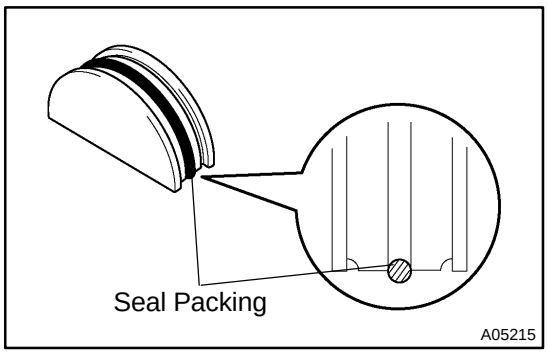

8. INSTALL SEMI-CIRCULAR PLUGS

(a) Remove any old packing (FIPG) material.

(b) Apply seal packing to the semi-circular plug grooves.
Seal packing: Part No. 08826-00080 or equivalent

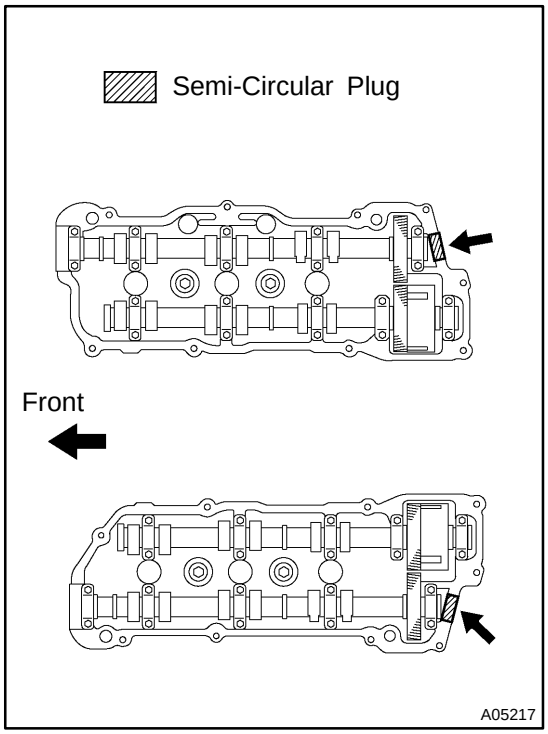

(c) Install the 2 semi-circular plugs to the cylinder heads.

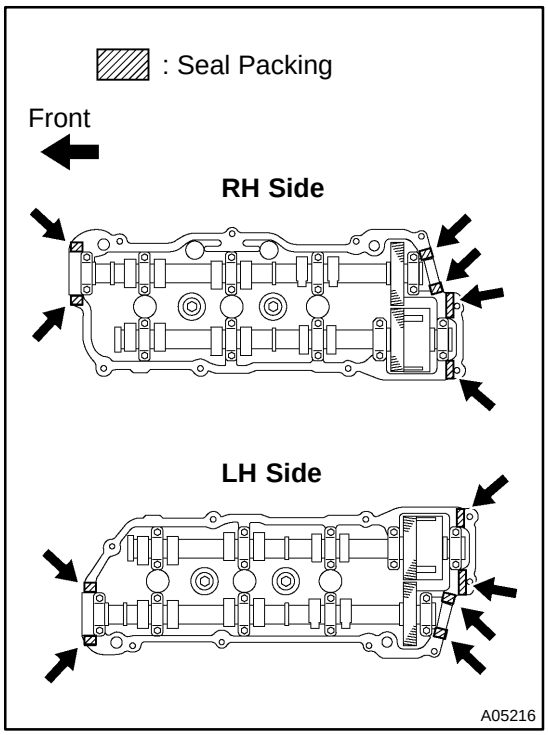

9. INSTALL CYLINDER HEAD COVERS

(a) Apply seal packing to the cylinder heads as shown in the illustration.
Seal packing: Part No. 08826-00080 or equivalent

(b) Install the gasket to the cylinder head cover.

(c) Install the cylinder head cover with the 9 bolts. Uniformly tighten the bolts in several passes. Install the 2 cylinder head covers.
Torque: 8 N·m (80 kgf·cm, 69 in.·lbf)

10. INSTALL PS PUMP BRACKET
Torque: 43 N·m (440 kgf·cm, 32 ft·lbf)

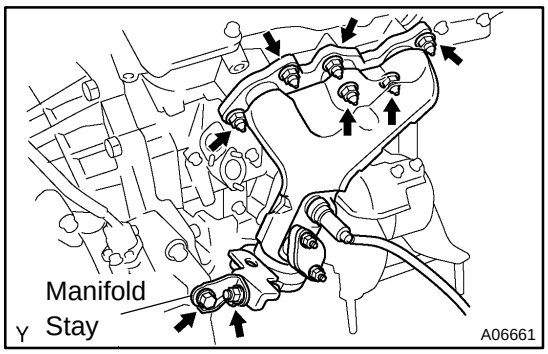

11. INSTALL RH EXHAUST MANIFOLD

(a) Install a new gasket and the exhaust manifold with the 6 nuts. Uniformly tighten the nuts in several passes.
Torque: 49 N·m (500 kgf·cm, 36 ft·lbf)

(b) Install the exhaust manifold stay with the bolt and nut. Alternately tighten the bolt and nut.
Torque: 34 N·m (350 kgf·cm, 25 ft·lbf)

(c) Connect the A/F sensor connector.

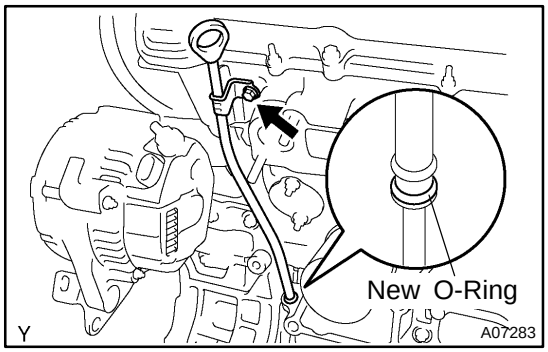

12. INSTALL OIL DIPSTICK AND GUIDE

(a) Install a new O-ring to the dipstick guide.

(b) Apply soapy water to the O-ring.

(c) Push in the dipstick guide end into the guide hole of the No.1 oil pan.

(d) Install the dipstick guide with the bolt.
Torque: 8 N·m (80 kgf·cm, 69 in.·lbf)

(e) Install the dipstick.

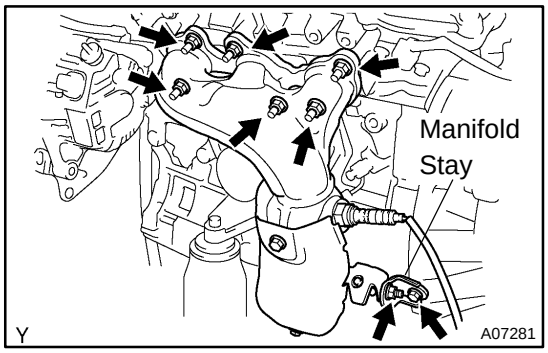

13. INSTALL LH EXHAUST MANIFOLD

(a) Install a new gasket and the exhaust manifold with the 6 nuts. Uniformly tighten the nuts in several passes.
Torque: 49 N·m (500 kgf·cm, 36 ft·lbf)

(b) Install the exhaust manifold stay with the bolt and nut. Alternately tighten the bolt and nut.
Torque: 34 N·m (350 kgf·cm, 25 ft·lbf)

(c) Connect the A/F sensor connector.

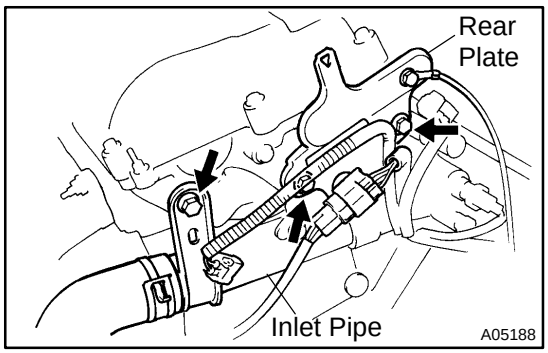

14. INSTALL WATER INLET PIPE

(a) Install a new O-ring to the water inlet pipe.

(b) Apply soapy water to the O-ring.

(c) Connect the water inlet pipe to the water inlet.

(d) Install the bolt holding the water inlet pipe to the cylinder head.
Torque: 19.5 N·m (200 kgf·cm, 14 ft·lbf)

15. INSTALL CYLINDER HEAD REAR PLATE
Torque: 8 N·m (80 kgf·cm, 69 in.·lbf)

16. INSTALL ENGINE WIRE PROTECTOR

17. INSTALL CAMSHAFT TIMING OIL CONTROL VALVES

18. INSTALL CAMSHAFT POSITION SENSORS

19. INSTALL NO.3 TIMING BELT COVER

(a) Check that the timing belt cover gaskets have no cracks or peeling, etc.

If the gaskets have cracks or peeling etc., replace them using these steps:

- Using a screwdriver and gasket scraper, remove all the old gasket material.

- Thoroughly clean all components to remove all the loose material.

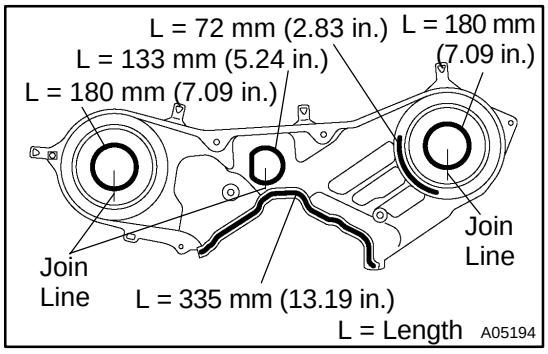

- Remove the backing paper from a new gasket and install the gasket evenly to the part of the timing belt cover shaded black in the illustration.

NOTICE:

When joining 2 gaskets, do not leave a gap between them. Cut off any excess gasket.

- After installing the gasket, press down on it so that the adhesive firmly sticks to the timing belt cover.

(b) Install the timing belt cover with the 6 bolts.
Torque: 8.5 N·m (85 kgf·cm, 74 in.·lbf)

(c) Install the 3 engine wire clamps to the timing belt cover.

20. INSTALL NO.2 IDLER PULLEY (See page EM-21)

21. INSTALL CAMSHAFT TIMING PULLEYS (See page EM-21)

22. INSTALL TIMING BELT (See page EM-21)

23. INSTALL SPARK PLUGS

24. INSTALL IGNITION COILS

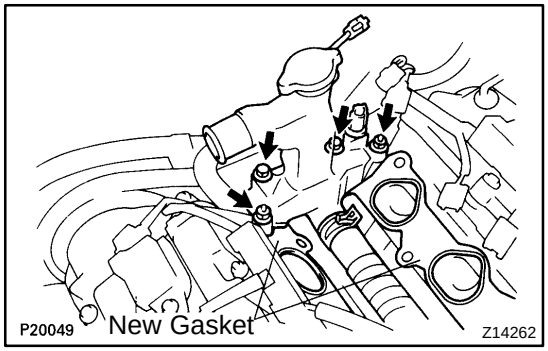

25. INSTALL WATER OUTLET

(a) Install 2 new gaskets.

(b) Connect the water outlet to the bypass hose.

(c) Install the water outlet with the 2 bolts, 2 nuts and 2 plate washers. Alternately tighten the bolts and nuts.
Torque: 15 N·m (150 kgf·cm, 11 ft·lbf)

NOTICE:

Do not scratch the seal surface of the water outlet with the stud bolt.

(d) Connect the ECT sender gauge connector.

(e) Connect the ECT sensor connector.

(f) Connect the ground strap connector.

(g) Connect the upper radiator hose.

(h) Connect the engine coolant reservoir hose.

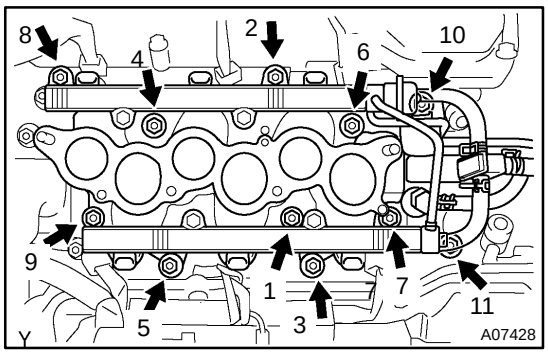

26. INSTALL INTAKE MANIFOLD ASSEMBLY

(a) Install the intake manifold, delivery pipe and injectors assembly with the 9 bolts, 2 plate washers and 2 nuts. Uniformly tighten the bolts and nuts in several passes and in the sequence shown.

Torque: 15 N·m (150 kgf·cm, 11 ft·lbf)

(b) Connect the fuel inlet hose to the fuel filter.

CAUTION:

Perform connecting operations of the fuel tube connector (quick type) after observing the precaution.

(See page SF-1)

(c) Connect the heater hose to the intake manifold.

27. RETIGHTEN WATER OUTLET MOUNTING BOLTS AND NUTS

Tighten the 2 bolts and 2 nuts.

Torque: 15 N·m (150 kgf·cm, 11 ft·lbf)

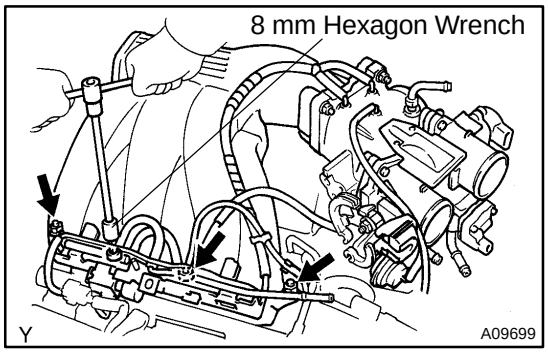

28. INSTALL AIR INTAKE CHAMBER ASSEMBLY

(a) Using an 8 mm hexagon wrench, install a new gasket and the air intake chamber assembly with the 2 bolts and 2 nuts. Uniformly tighten the bolts and nuts in several passes.

Torque: 43 N·m (440 kgf·cm, 32 ft·lbf)

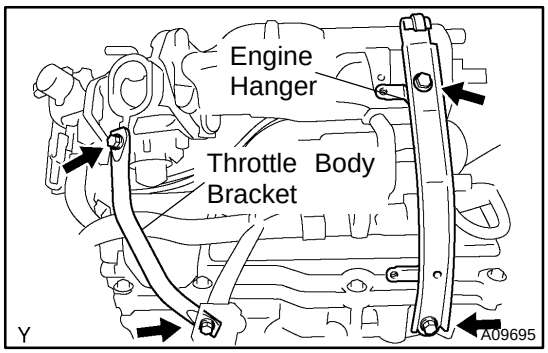

(b) Install the No.1 engine hanger with the 2 bolts.

Torque: 39 N·m (400 kgf·cm, 29 ft·lbf)

(c) Install the throttle body bracket with the 2 bolts.

Torque: 19.5 N·m (200 kgf·cm, 14 ft·lbf)

(d) Connect the PCV hose to the PCV valve on the RH cylinder head.

(e) Connect the ground strap and cable to the intake air control valve for the ACIS.

(f) Connect the ground cable and strap with the nut.

Torque: 14.5 N·m (145 kgf·cm, 10 ft·lbf)

(g) Connect the ground cable to the air intake chamber.

(h) Connect the brake booster vacuum hose to the throttle body.

(i) Connect the 2 water bypass hoses to the throttle body.

(j) Connect the air assist hose to the throttle body.

(k) Connect the purge hose to the emission control valve set.

(l) Connect the 2 vacuum hoses to the vacuum tank for ACIS.

(m) Connect the engine wire clamp to the emission control valve set.

(n) Install the PS pressure tube with the 2 nuts.
(o) Connect the throttle position sensor connector.
(p) Connect the IAC valve connector.
(q) Connect the No.1 VSV connector for the ACIS.
(r) Connect the No.2 VSV connector for the ACIS.
(s) Connect the VSV connecter for the EVAP.
(t) Connect the DLC1 to the bracket on the intake air control valve.
(u) Connect the throttle cable.
(v) Connect the accelerator cable.

29. INSTALL AIR CLEANER CAP HOSE WITH RESONATOR

30. INSTALL V-BANK COVER

(a) Using a 5 mm hexagon wrench, install the V-bank cover with the 3 cap nuts.
(b) Press down the V-bank cover fastener.

31. INSTALL FRONT EXHAUST PIPE (See page EM-77)

32. INSTALL PS PUMP (See page SR-35)

33. INSTALL GENERATOR DRIVE BELT (See page CH-16)

34. FILL WITH ENGINE COOLANT

35. START ENGINE AND CHECK FOR LEAKS

36. VEHICLE ROAD TEST

Check for abnormal noise, shock, slippage, correct shift points and smoothly operation.

37. RECHECK ENGINE COOLANT LEVEL

EM0ZI-02

REASSEMBLY

HINT:

- Thoroughly clean all parts to be assembled.
- Before installing the parts, apply new engine oil to all sliding and rotating surfaces.
- Replace all gaskets and oil seals with new ones.

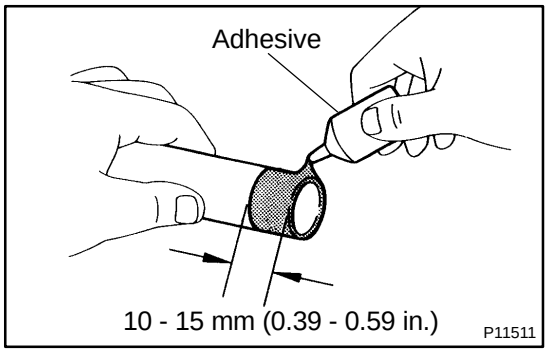

1. INSTALL SPARK PLUG TUBES

HINT:

When using a new cylinder head, spark plug tubes must be installed.

(a) Apply adhesive to the end of the spark plug tube.
Adhesive: Part No. 08833-00070, THREE BOND 1324 or equivalent

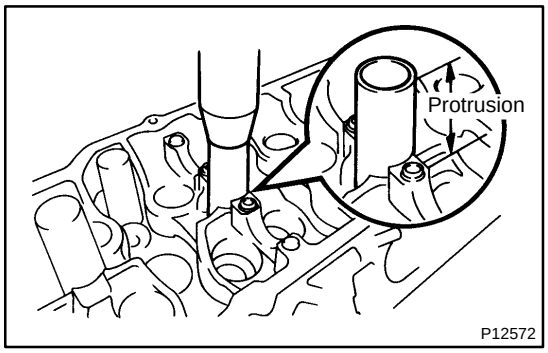

(b) Using a press, press in a new spark plug tube until there is 42.4 - 43.4 mm (1.669 - 1.709 in.) protruding from the camshaft bearing cap installation surface of the cylinder head.

NOTICE:

Avoid pressing a new spark plug tube in too far by measuring the amount of the protrusion while pressing.

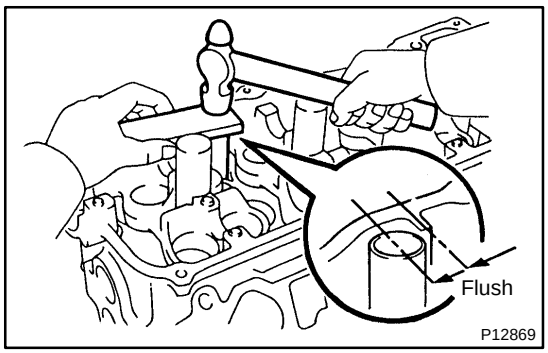

2. INSTALL PCV PIPES

HINT:

When using a new cylinder head, PCV pipe must be installed.
Using a wooden block and hammer, tap in a new PCV pipe until its top side is flush with the cylinder head edge.

NOTICE:

Be careful not to damage the cylinder head edge.

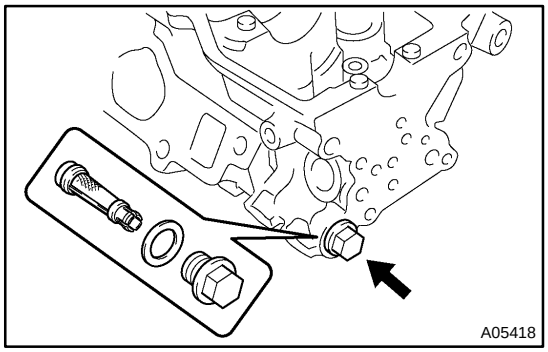

3. INSTALL OIL CONTROL VALVE FILTER

(a) Assemble the valve filter and plug.
(b) Install the plug with new gasket.
Torque: 45 N·m (460 kgf·cm, 33 ft·lbf)

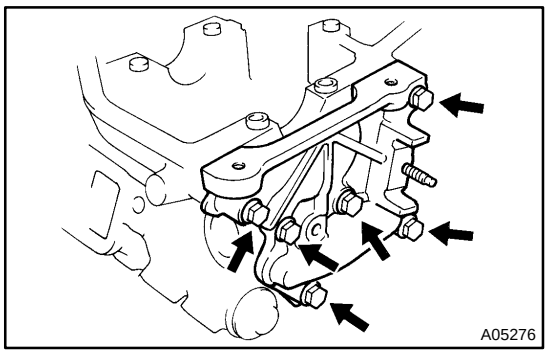

4. INSTALL CYLINDER HEAD REAR COVER

Install the rear cover and gasket with the 6 bolts.

Torque: 10 N·m (100 kgf·cm, 7.3 ft·lbf)

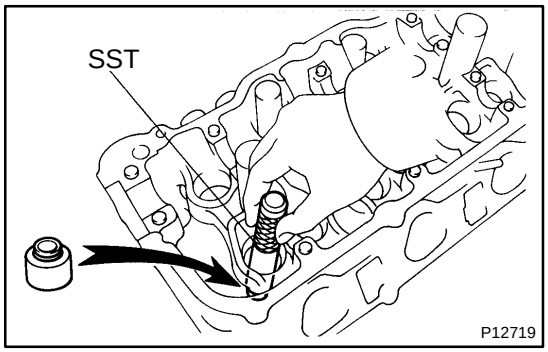

5. INSTALL VALVES

(a) Using SST, push in a new oil seal.
SST 09201-41020

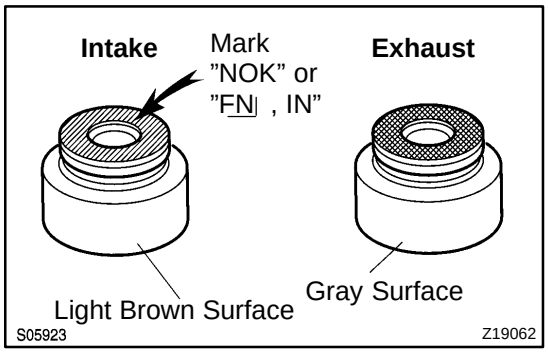

HINT:
The intake valve oil seal is light brown and the exhaust valve oil seal is gray.

NOTICE:

Pay much attention when assembling the oil seal for intake and exhaust. Assembling the wrong one may cause a failure.

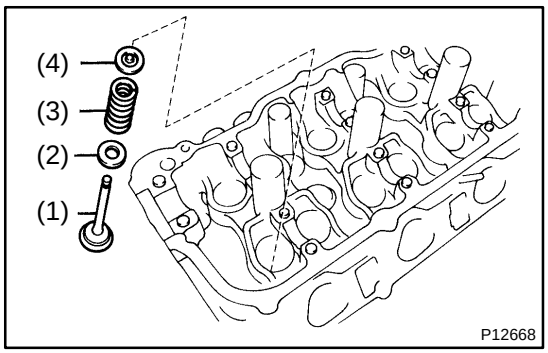

(b) Install the valve (1), spring seat (2), valve spring (3) and spring retainer (4).

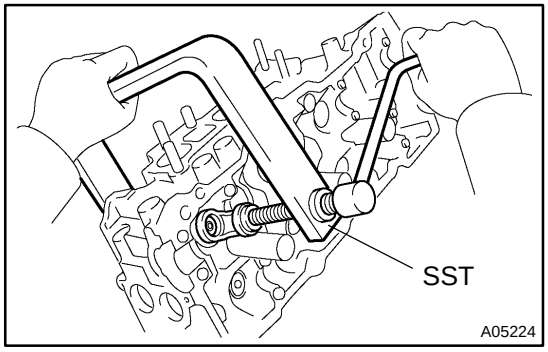

(c) Using SST, compress the valve spring and place the 2 keepers around the valve stem.
SST 09202-70020 (09202-00010)

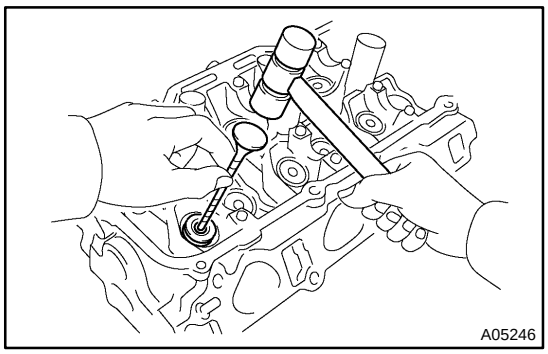

(d) Using a plastic-faced hammer and the valve stem (not in use) tip wound with vinyl tape, lightly tap the valve stem tip to assure proper fit.

NOTICE:

Be careful not do damage the valve stem tip.

6. INSTALL VALVE LIFTERS AND SHIMS

(a) Install the valve lifter and shim.

(b) Check that the valve lifter rotates smoothly by hand.

EM0ZE-02

REMOVAL

NOTICE:

Do not remove or install the camshaft timing gear (VVT-i) beside changing VVT-i or the camshaft.

1. **DRAIN ENGINE COOLANT**
2. **REMOVE RH FENDER APRON SEAL**
3. **REMOVE GENERATOR DRIVE BELT (See page CH-6)**
4. **REMOVE PS PUMP (See page SR-27)**
5. **REMOVE FRONT EXHAUST PIPE (See page EM-72)**

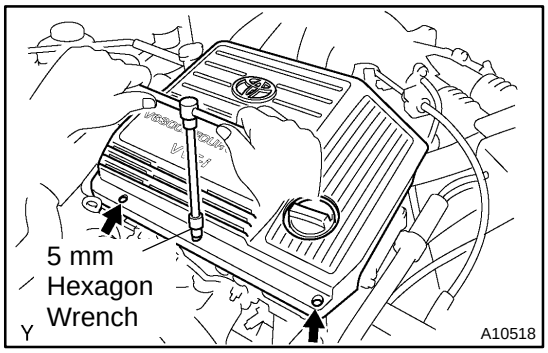

6. **REMOVE V-BANK COVER**

(a) Using a 5 mm hexagon wrench, remove the 3 cap nuts.

(b) Loosen the V-bank cover fastener counterclockwise.

(c) Remove the V-bank cover.

7. **REMOVE AIR CLEANER HOSE WITH RESONATOR**

8. **REMOVE AIR INTAKE CHAMBER ASSEMBLY**

(a) Disconnect the accelerator cable.

(b) Disconnect the throttle cable.

(c) Disconnect the throttle position sensor connector.

(d) Disconnect the IAC valve connector.

(e) Disconnect the No.1 VSV connector for the ACIS.

(f) Disconnect the No.2 VSV connector for the ACIS.

(g) Disconnect the VSV connector for the EVAP.

(h) Disconnect the DLC1 from the bracket on the intake air control valve.

(i) Remove the 2 nuts, and disconnect the PS pressure tube from the No.1 engine hanger.

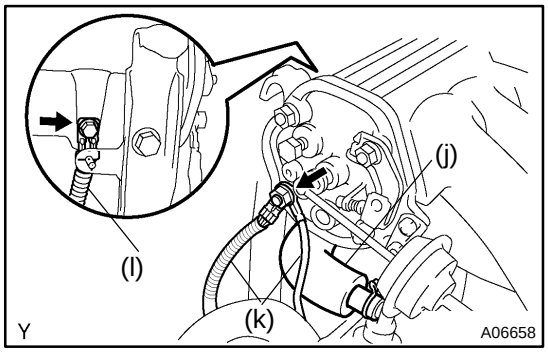

(j) Disconnect the PCV hose from the PCV valve on the RH cylinder head.

(k) Disconnect the ground strap and cable from the intake air control valve for the ACIS.

(l) Disconnect the ground cable from the air intake chamber.

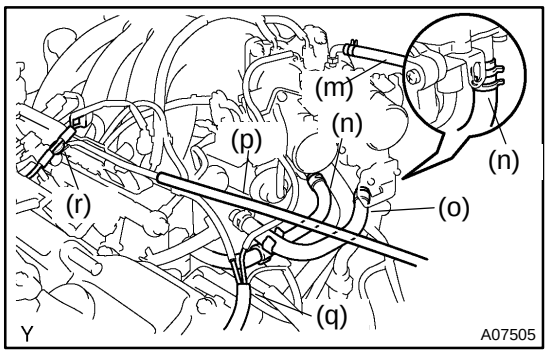

(m) Disconnect the brake booster vacuum hose from the throttle body.
(n) Disconnect the 2 water bypass hoses from the throttle body.
(o) Disconnect the air assist hose from the throttle body.
(p) Disconnect the purge hose from the pipe on the emission control valve set.
(q) Disconnect the 2 vacuum hoses from the vacuum tank for the ACIS.
(r) Disconnect the engine wire clamp from the emission control valve set.

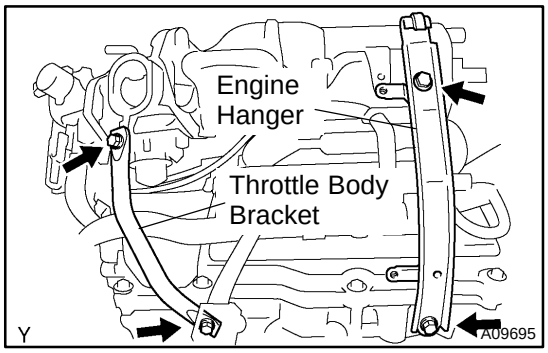

(s) Remove the 2 bolts and No.1 engine hanger.
(t) Remove the 2 bolts and throttle body bracket.

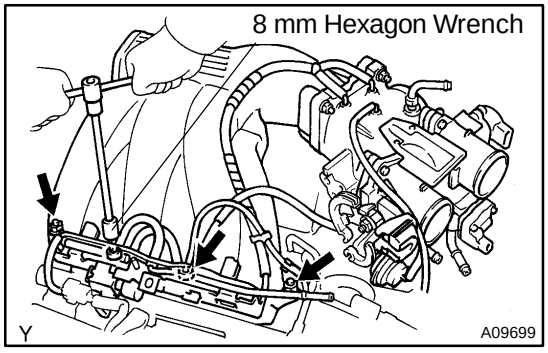

(u) Using an 8 mm hexagon wrench, remove the 2 bolts, 2 nuts, the air intake chamber assembly and gasket.

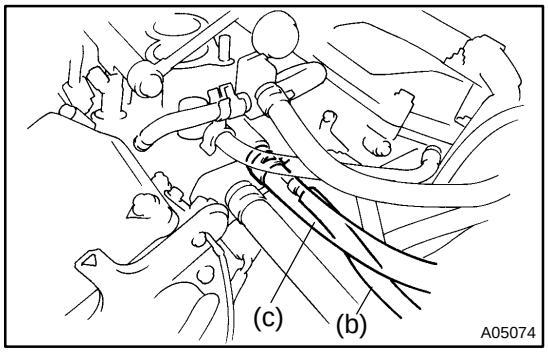

9. REMOVE INTAKE MANIFOLD ASSEMBLY

(a) Disconnect the 6 injector connectors.
(b) Disconnect the fuel inlet hose from the fuel filter.

CAUTION:

Perform connecting operations of the fuel tube connector (quick type) after observing the precautions.
(See page SF-1)

(c) Disconnect the heater hose from the intake manifold.

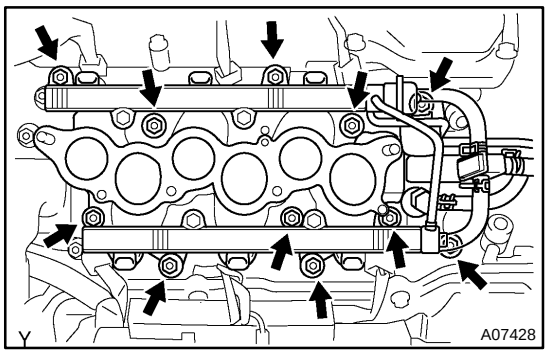

(d) Remove the 9 bolts, 2 nuts, 2 plate washers, the intake manifold, delivery pipes and injectors assembly.

NOTICE:

- **Be careful not to drop the injectors when removing the delivery pipes.**
- **Pay attention to put any hung load on the injector to and from the side direction.**

10. REMOVE WATER OUTLET

(a) Disconnect the ECT sender gauge connector.
(b) Disconnect the ECT sensor connector.
(c) Disconnect the ground strap connector.
(d) Disconnect the upper radiator hose.
(e) Disconnect the engine coolant reservoir hose.

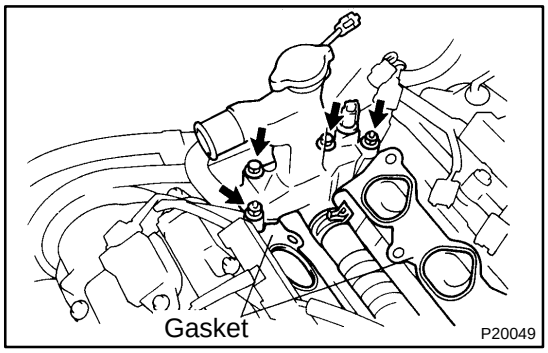

(f) Remove the 2 bolts, 2 nuts and 2 plate washers.
(g) Disconnect the water bypass hose, and remove the water outlet.
(h) Remove the 2 gaskets.

11. REMOVE IGNITION COILS
12. REMOVE SPARK PLUGS
13. REMOVE TIMING BELT (See page EM-15)
14. REMOVE CAMSHAFT TIMING PULLEYS (See page EM-15)
15. REMOVE NO.2 IDLER PULLEY (See page EM-15)
16. REMOVE NO.3 TIMING BELT COVER

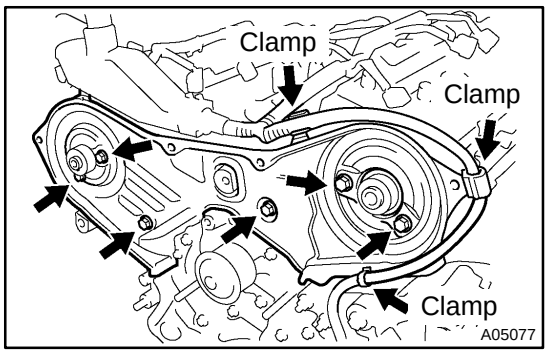

(a) Disconnect the 3 engine wire clamps from the timing belt cover.
(b) Remove the 6 bolts and timing belt cover.

17. REMOVE CAMSHAFT POSITION SENSORS
18. REMOVE CAMSHAFT TIMING OIL CONTROL VALVES

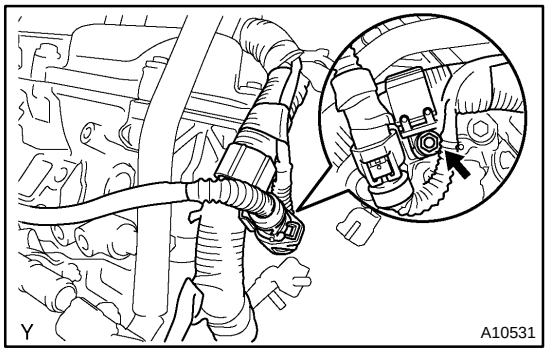

19. DISCONNECT ENGINE WIRE PROTECTOR FROM REAR SIDE

Remove the nut, and disconnect the engine wire protector from the RH cylinder head.

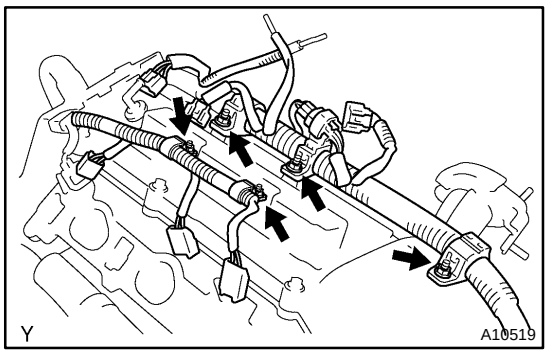

20. DISCONNECT ENGINE WIRE AND PROTECTOR FROM RH SIDE

Remove the 5 nuts, and disconnect the engine wire and protector from the RH cylinder head cover.

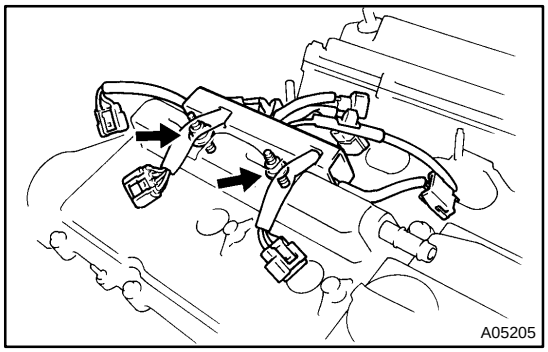

21. DISCONNECT ENGINE WIRE PROTECTOR FROM LH SIDE

Remove the 2 bolts, and disconnect the engine wire protector from the LH cylinder head cover.

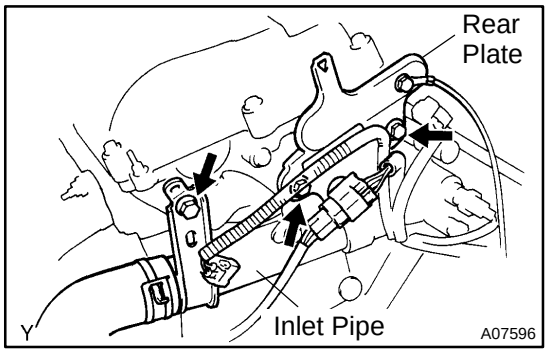

22. DISCONNECT CYLINDER HEAD REAR PLATE FROM LH CYLINDER HEAD

Remove the 2 bolts, and disconnect the rear plate.

23. DISCONNECT WATER INLET PIPE FROM LH CYLINDER HEAD AND WATER INLET

(a) Remove the bolt, and disconnect the inlet pipe from the water inlet.

(b) Remove the O-ring from the inlet pipe.

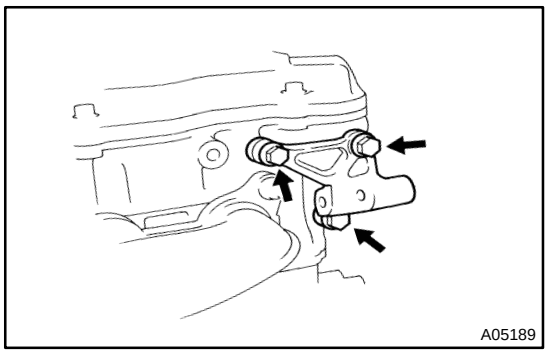

24. REMOVE PS PUMP BRACKET

Remove the 3 bolts and pump bracket.

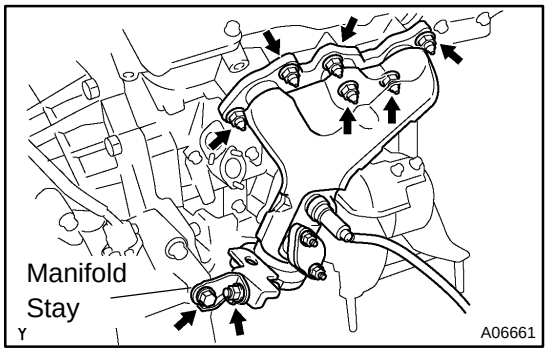

25. REMOVE RH EXHAUST MANIFOLD

(a) Disconnect the A/F sensor connector.

(b) Remove the bolt, nut and exhaust manifold stay.

(c) Remove the 6 nuts, exhaust manifold and gasket.

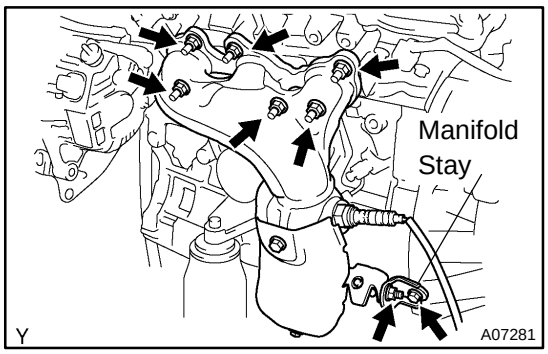

26. REMOVE LH EXHAUST MANIFOLD

(a) Disconnect the A/F sensor connector.
(b) Remove the bolt, nut and exhaust manifold stay.
(c) Remove the 6 nuts, exhaust manifold and gasket.

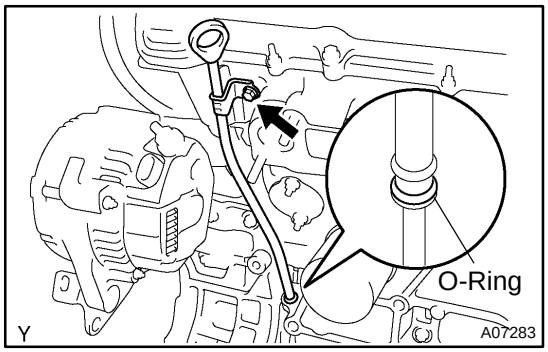

27. REMOVE OIL DIPSTICK AND GUIDE

(a) Remove the bolt holding the dipstick guide to the LH cylinder head.
(b) Pull out the dipstick guide together with the dipstick from the No.1 oil pan.
(c) Remove the O-ring from the dipstick guide.

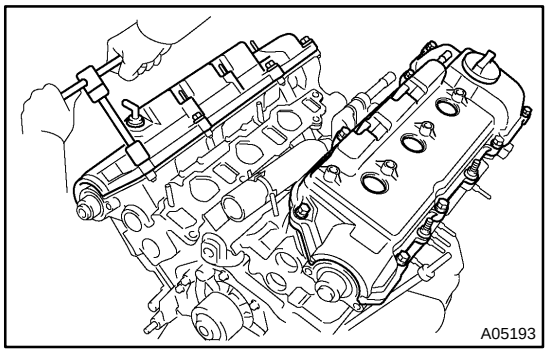

28. REMOVE CYLINDER HEAD COVERS

Remove the 9 bolts, cylinder head cover and gasket. Remove the 2 cylinder head covers.

29. REMOVE CAMSHAFTS OF RH CYLINDER HEAD

NOTICE:

Since the thrust clearance of the camshaft is small, the camshaft must be kept leveled while it is being installed. If the camshaft is not kept leveled, the portion of the cylinder head receiving the shaft thrust may crack or be damaged, causing the camshaft to seize or break. To avoid this, the following steps should be carried out.

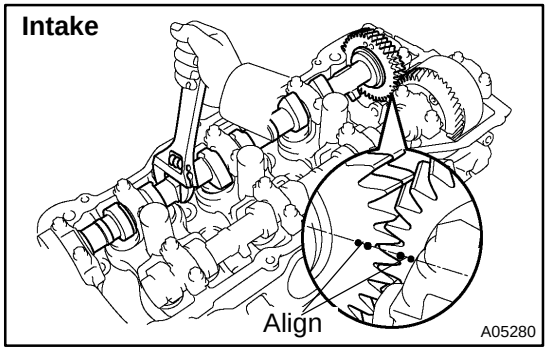

(a) Remove the intake camshaft.
    (1) Align the timing marks (2 dot marks) of the camshaft drive and driven gears by turning the camshaft with a wrench.

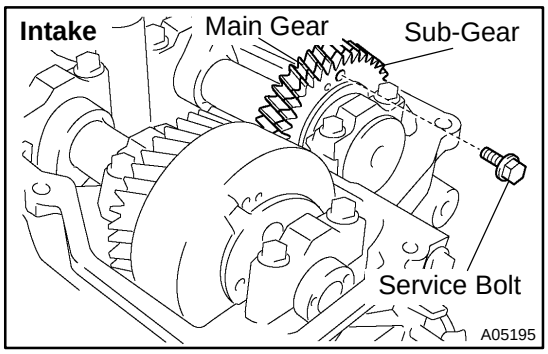

(2) Secure the exhaust camshaft sub-gear to the main gear with a service bolt.

Recommended service bolt:

Thread diameter	6 mm
Thread pitch	1.0 mm
Bolt length	16 - 20 mm (0.63 - 0.79 in.)

HINT:
When removing the camshaft, mark certain that the torsional spring force of the sub-gear has been eliminated by the above operation.

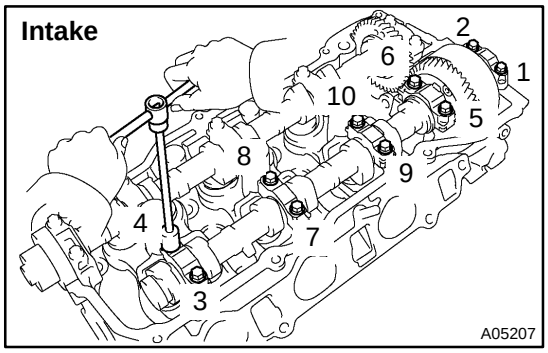

(3) Uniformly loosen and remove the 10 bearing cap bolts in several passes and in the sequence shown.
(4) Remove the 5 bearing caps and intake camshaft.

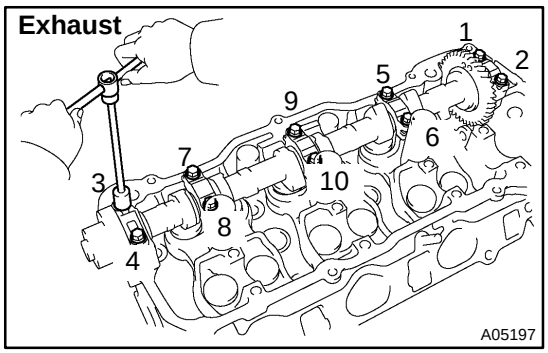

(b) Remove the exhaust camshaft.
(1) Uniformly loosen and remove the 10 bearing cap bolts in several passes and in the sequence shown.
(2) Remove the 5 bearing caps, oil seal and exhaust camshaft.

30. REMOVE CAMSHAFTS OF LH CYLINDER HEAD

NOTICE:

Since the thrust clearance of the camshaft is small, the camshaft must be kept leveled while it is being installed. If the camshaft is not kept leveled, the portion of the cylinder head receiving the shaft thrust may crack or be damaged, causing the camshaft to seize or break. To avoid this, the following steps should be carried out.

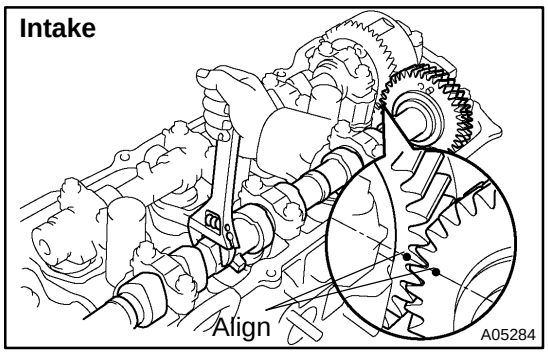

(a) Remove the intake camshaft.
(1) Align the timing marks (1 dot mark) of the camshaft drive and driven gears by turning the camshaft with a wrench.

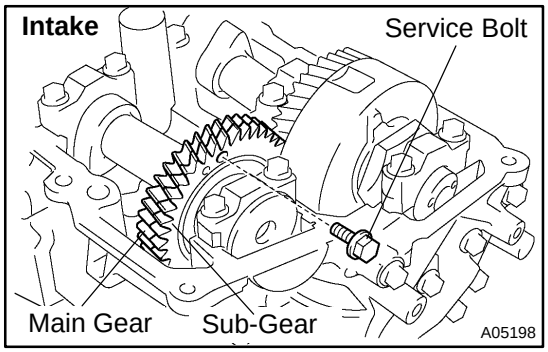

(2) Secure the exhaust camshaft sub-gear to the main gear with a service bolt.

Recommended service bolt:

Thread diameter	6 mm
Thread pitch	1.0 mm
Bolt length	16 - 20 mm (0.63 - 0.79 in.)

HINT:
When removing the camshaft, make sure that the torsional spring force of the sub-gear has been eliminated by the above operation.

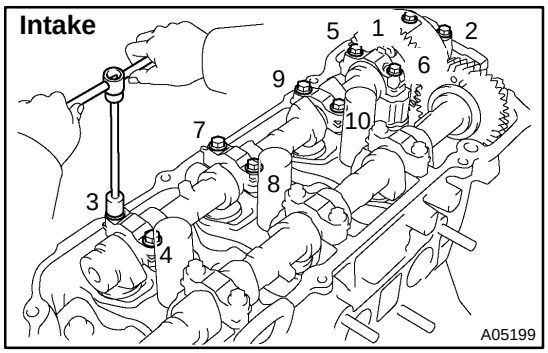

(b) Uniformly loosen and remove the 10 bearing cap bolts in several passes and in the sequence shown.
(c) Remove the 5 bearing caps and intake camshaft.

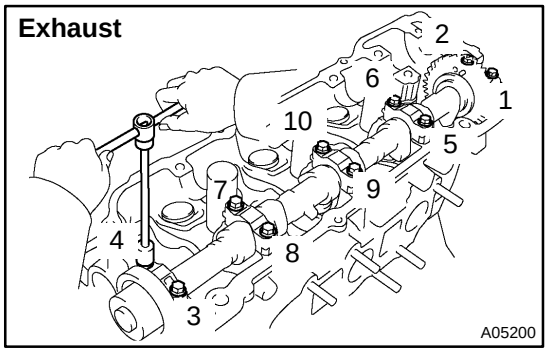

(d) Remove the exhaust camshaft.
(1) Uniformly loosen and remove the 10 bearing cap bolts in several passes and in the sequence shown.
(2) Remove the 5 bearing caps, oil seal and exhaust camshaft.

HINT:
- Arrange the camshafts in the correct order.
- Arrange the bearing caps in the correct order.

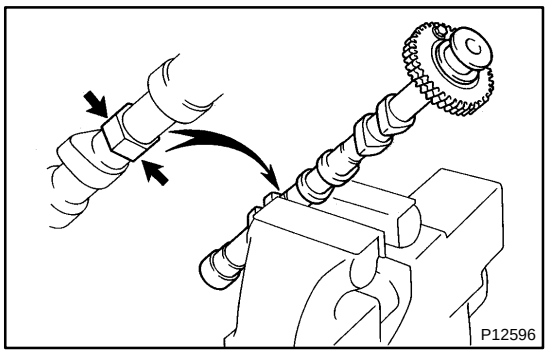

31. DISASSEMBLE EXHAUST CAMSHAFTS

(a) Mount the hexagonal wrench head portion of the camshaft in a vise.

NOTICE:

Be careful not to damage the camshaft.

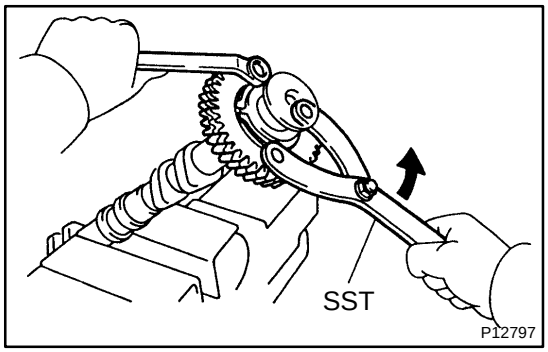

(b) Using SST, turn the sub-gear counterclockwise, and remove the service bolt.
SST 09960-10010 (09962-01000, 09963-00500)

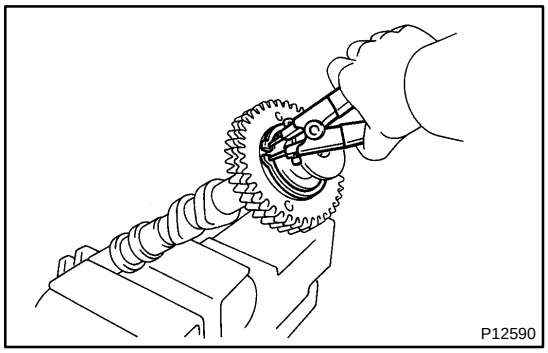

(c) Using snap ring pliers, remove the snap ring.

(d) Remove the wave washer, camshaft sub-gear, and camshaft gear spring.

HINT:

Arrange the camshaft sub-gears and gear springs (RH and LH side).

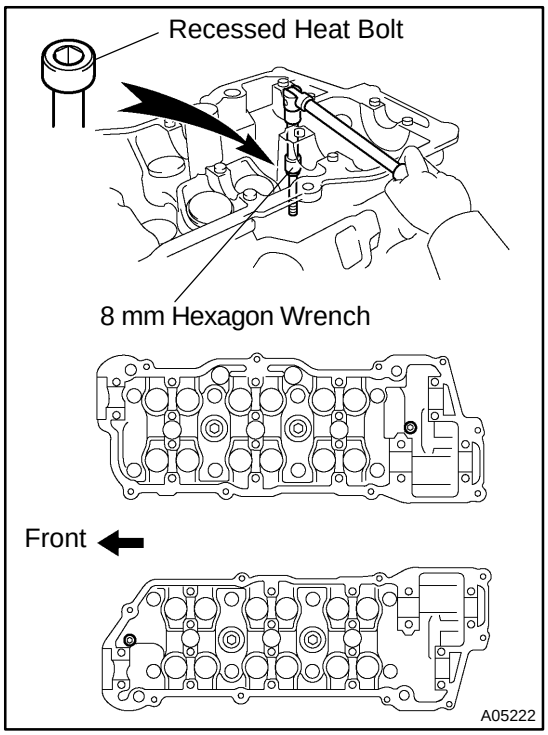

32. REMOVE CYLINDER HEADS

(a) Using an 8 mm hexagon wrench, remove the cylinder head (recessed head) bolt on each cylinder head, then repeat for the other side, as shown.

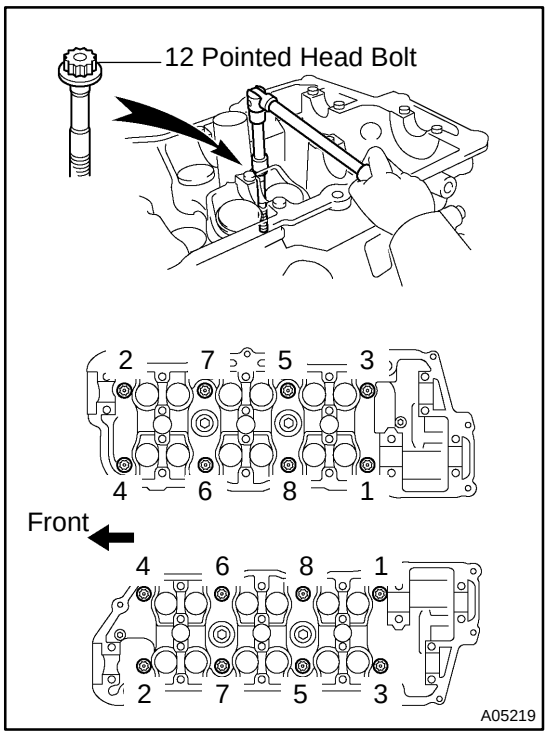

(b) Uniformly loosen and remove the 8 cylinder head (12 pointed head) bolts on each cylinder head in several passes and in the sequence shown, then repeat for the other side, as shown. Remove the 16 cylinder head bolts and plate washers.

NOTICE:

Head warpage or cracking could result from removing bolts in an incorrect order.

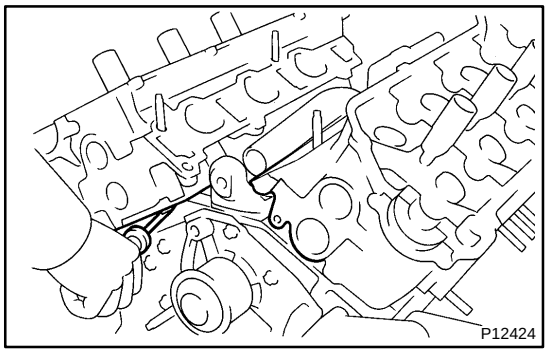

(c) Lift the cylinder head from the dowels on the cylinder block and place the 2 cylinder heads on wooden blocks on a bench.

HINT:

If the cylinder head is difficult to lift off, pry between the cylinder head and cylinder block with a screwdriver.

NOTICE:

Be careful not to damage the contact surfaces of the cylinder head and cylinder block.

EM0ZH-02

REPLACEMENT

1. REPLACE VALVE GUIDE BUSHINGS

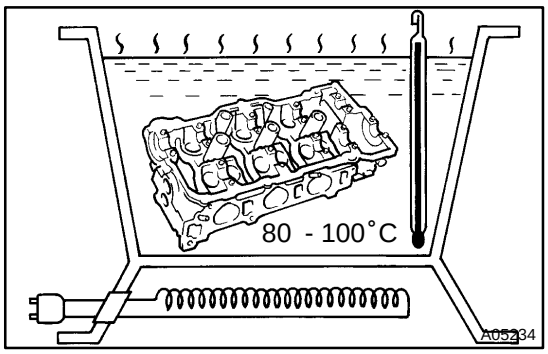

(a) Gradually heat the cylinder head to 80 - 100˚C (176 - 212˚F).

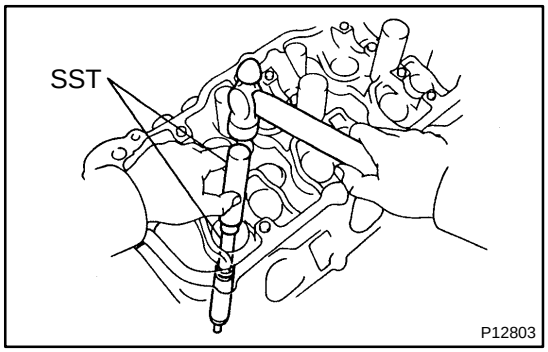

(b) Using SST and a hammer, tap out the guide bushing.
SST 09201-01055, 09950-70010 (09951-07100)

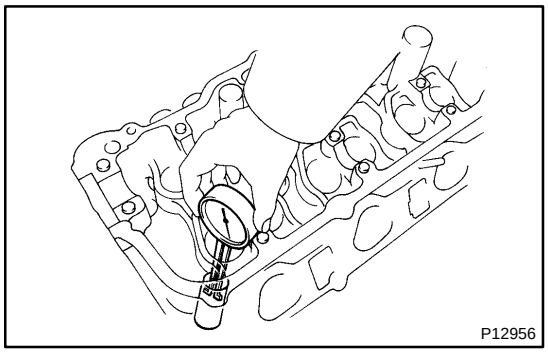

(c) Using a caliper gauge, measure the bushing bore diameter of the cylinder head.

Both intake and exhaust

Bushing bore diameter mm (in.)	Bushing size
10.295 - 10.313 (0.4053 - 0.4060)	Use STD
10.345 - 10.363 (0.4073 - 0.4080)	Use O/S 0.05

(d) Select a new guide bushing (STD or O/S 0.05).

If the bushing bore diameter of the cylinder head is greater than 10.313 mm (0.4060 in.), machine the bushing bore to the following dimension:

10.345 - 10.363 mm (0.4073 - 0.4080 in.)

If the bushing bore diameter of the cylinder head is greater than 10.363 mm (0.4080 in.), replace the cylinder head.

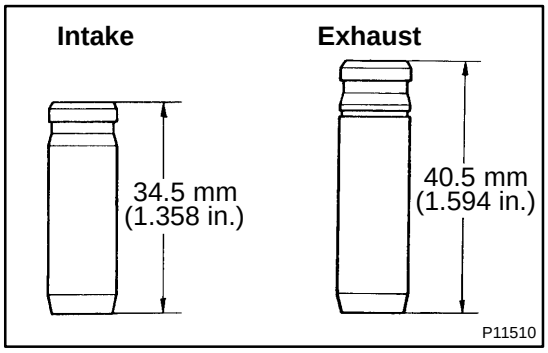

HINT:

Different bushings are used for the intake and exhaust.

(e) Gradually heat the cylinder head to 80 - 100˚C (176 - 212˚F).

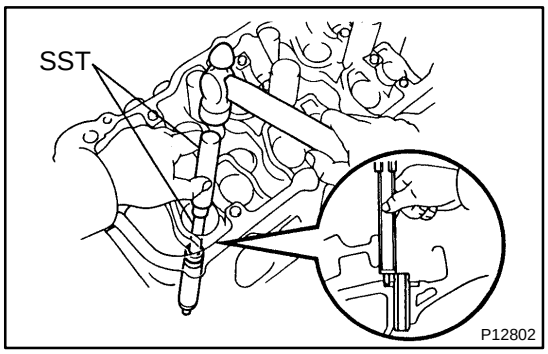

(f) Using SST and a hammer, tap in a new guide bushing to the specified protrusion height.
SST 09201-01055, 09950-70010 (09951-07100)
Protrusion height:

Intake	11.1 - 11.3 mm (0.437 - 0.453 in.)
Exhaust	8.9 - 9.3 mm - (0.350 - 0.366 in.)

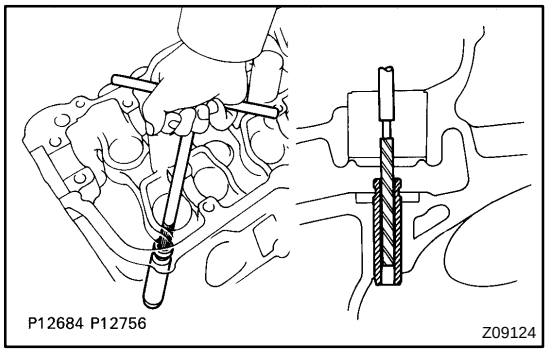

(g) Using a sharp 5.5 mm reamer, ream the guide bushing to obtain the standard specified clearance (See page EM-42) between the guide bushing and valve stem.

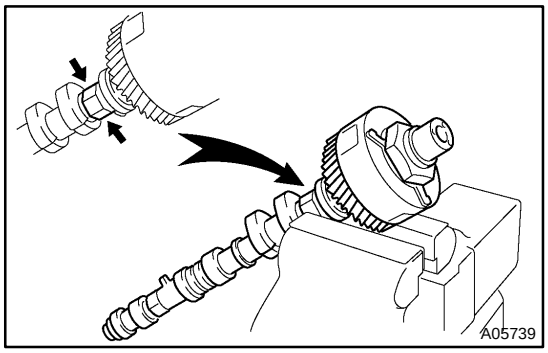

2. REPLACE CAMSHAFT TIMING GEAR (VVT-i)

NOTICE:

Do not remove or install the camshaft timing gear (VVT-i) beside changing VVT-i or the camshaft.

(a) Mount the hexagon wrench head portion of the camshaft in a vise.

NOTICE:

Be careful not to damage the camshaft.

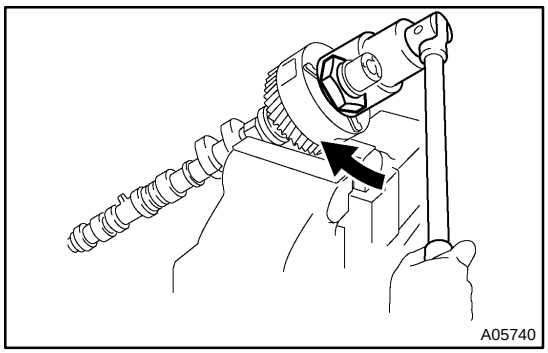

(b) Using a 46 mm socket wrench, remove the lock nut by turning it clockwise.

NOTICE:

- **Remove it under the condition that the lock pin is operated and lock at the maximum delay angle position.**
- **The lock nut have LH threads.**
- **Never use any tool other than the socket wrench, otherwise that may result in deforming the cam angle rotor portion.**

(c) Remove the camshaft VVT-i.

HINT:

In case of having difficulty to remove VVT-i, apply a slight hitting using a plastic-faced hammer and then remove it.

NOTICE:

Never remove the 3 bolts on the gear.

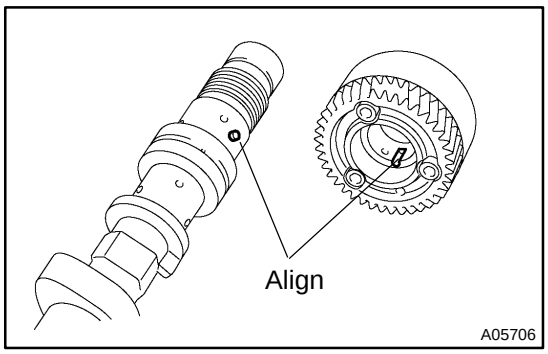

(d) Align the knock pin and knock pin groove and install VVT-i on the camshaft.

NOTICE:

Install it under the condition that the lock pin is operated and lock at the maximum delay angle position.

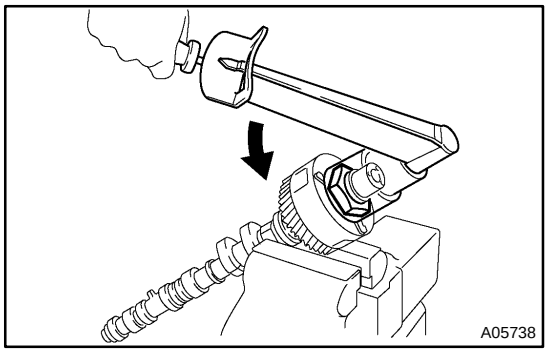

(e) Apply the engine oil on the nut, the placing surface of VVT-i and the screw portion.

HINT:

Be sure to apply the oil, otherwise the prescribed torque cannot be obtained.

(f) Using a 46 mm socket wrench, install and torque a new lock nut by turning it counterclockwise.

Torque: 150 N·m (1,530 kgf·cm, 110 ft·lbf)

NOTICE:

- **Must change the nuts to the new ones when to change VVT-i.**
- **The lock nut have LH threads.**
- **Never use any tool other than the socket wrench, otherwise that may result in deforming the cam angle rotor portion.**

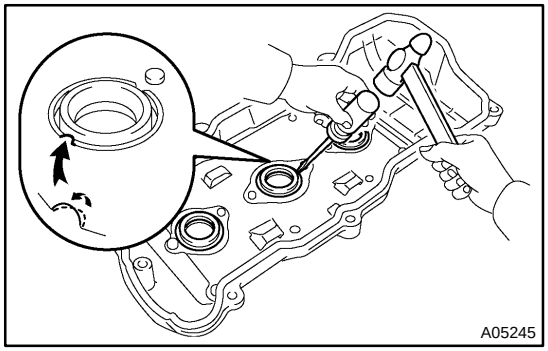

3. REPLACE SPARK PLUG TUBE GASKETS

(a) Bend up the tab on the ventilation baffle plate which prevents the gasket from the slipping out.

(b) Using a screwdriver and hammer, tap out the gasket.

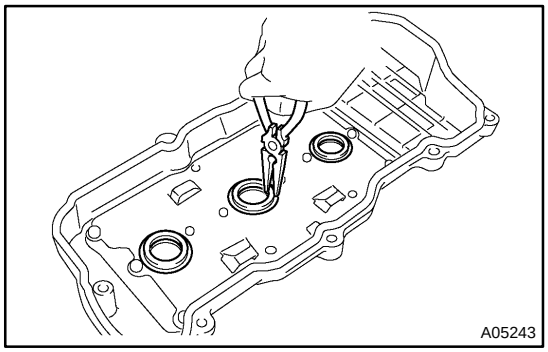

(c) Using needle-nose pliers, pry out the gasket.

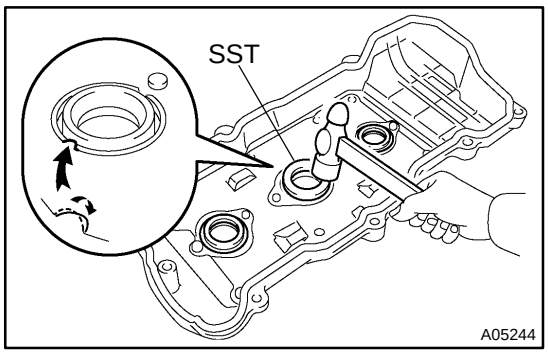

(d) Using SST and a hammer, tap in a new gasket until its surface is flush with the upper edge of the cylinder head cover.
SST 09608-03071

(e) Apply a light coat of MP grease to the gasket lip.

(f) Return the ventilation plate tab to its original position.

ENGINE UNIT

COMPONENTS

EM0ZK-02

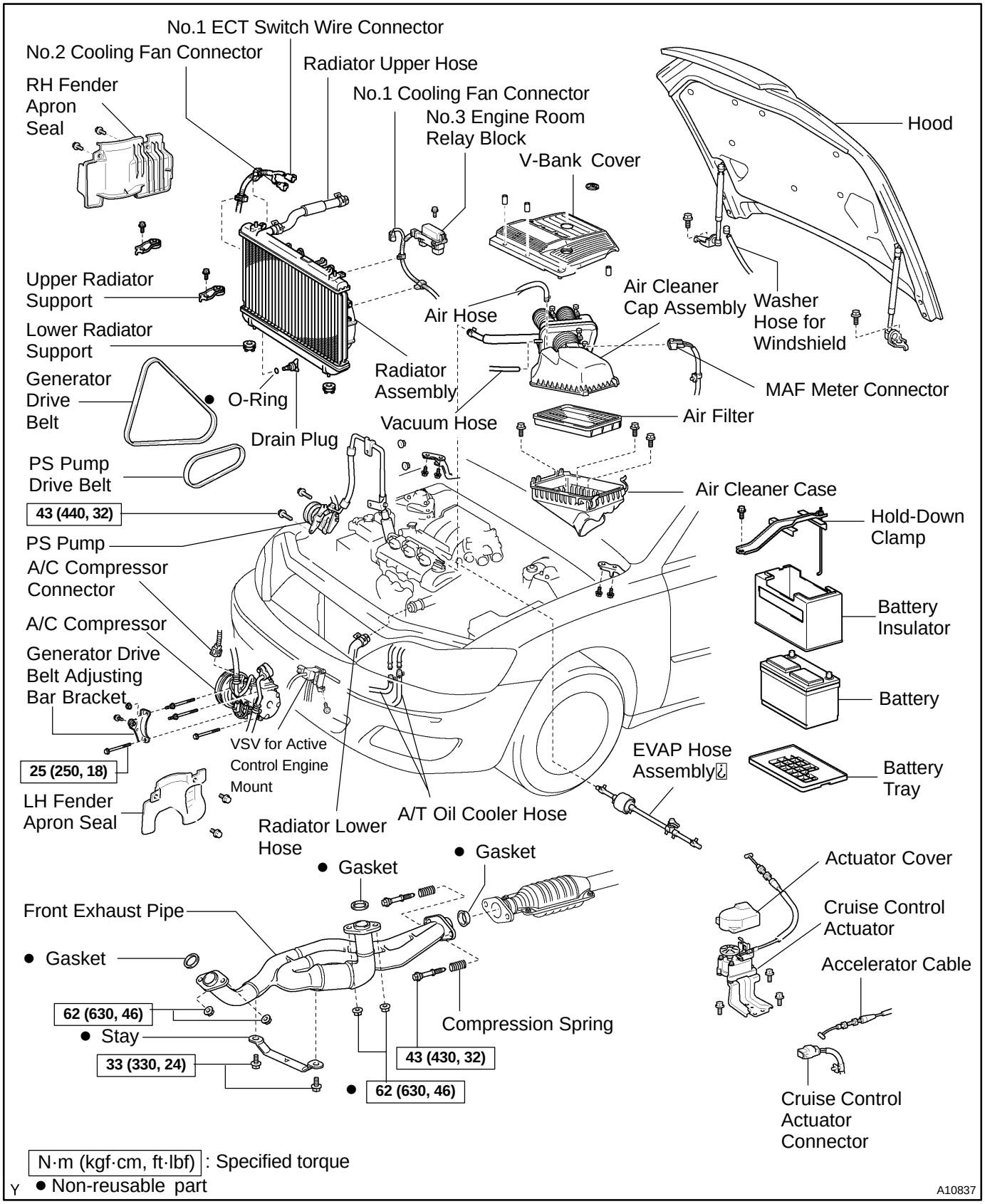

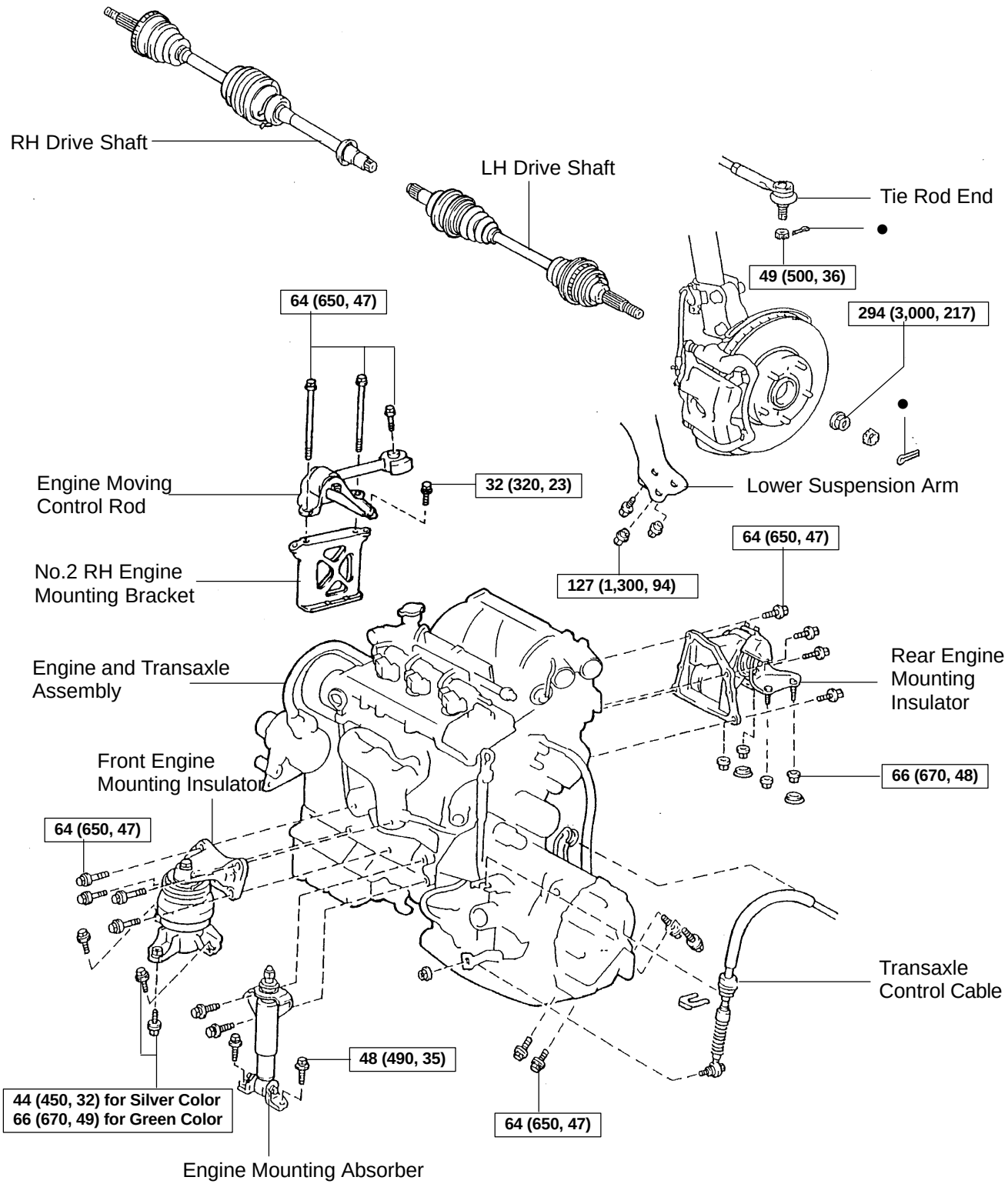
RH Drive Shaft
LH Drive Shaft
Tie Rod End
49 (500, 36)
294 (3,000, 217)
64 (650, 47)
Engine Moving Control Rod
32 (320, 23)
Lower Suspension Arm
No.2 RH Engine Mounting Bracket
127 (1,300, 94)
64 (650, 47)
Engine and Transaxle Assembly
Rear Engine Mounting Insulator
Front Engine Mounting Insulator
66 (670, 48)
64 (650, 47)
Transaxle Control Cable
48 (490, 35)
44 (450, 32) for Silver Color
66 (670, 49) for Green Color
64 (650, 47)
Engine Mounting Absorber
N·m (kgf·cm, ft·lbf): Specified torque
● Non-reusable part
A10839

EM0M5-03

INSPECTION

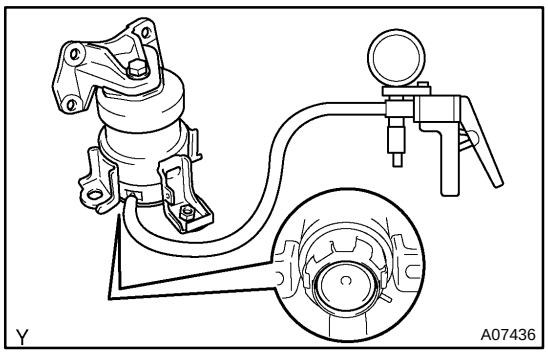

1. INSPECT FRONT ENGINE MOUNTING INSULATOR

(a) Using a MITYVAC (Hand-Held Vacuum Pump), apply vacuum of 80 kPa (600 mmHg, 25 in.Hg) and allow it to stand for 1 minute.

(b) Check that there is no change in the needle movement.

(c) Check that there is no fluid leakage caused by a break of a lower diaphragm.

If the operation is not as specified, replace the insulator.

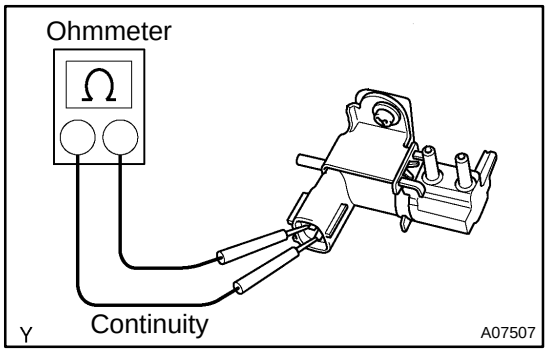

2. INSPECT VSV FOR ACTIVE CONTROL ENGINE MOUNT

(a) Inspect the VSV for open circuit.

Using an ohmmeter, check that there is continuity between the terminals.

Resistance: 19 - 21 Ω at 20˚C (68˚F)

If there is no continuity, replace the VSV.

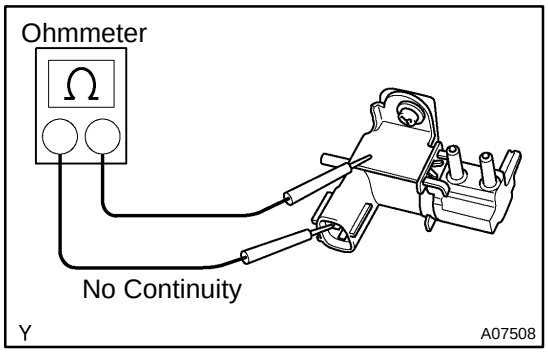

(b) Inspect the VSV for ground.

Using an ohmmeter, check that there is no continuity between each terminal and the body.

If there is continuity, replace the VSV.

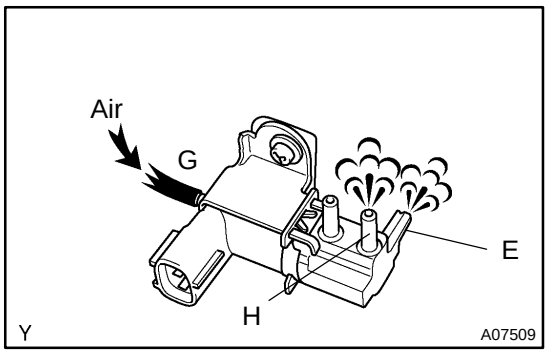

(c) Inspect the VSV operation.

(1) Check that air flows from port G to port E and port H.

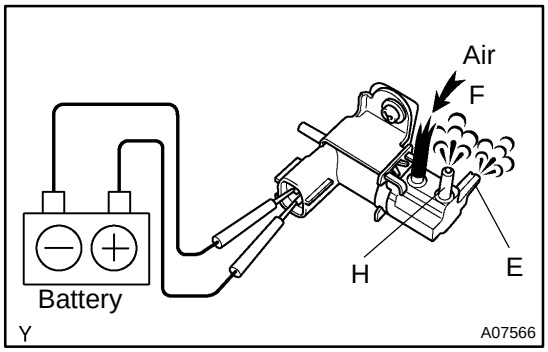

(2) Apply battery positive voltage across the terminals.

(3) Check that air flows from port F to port E and port H.

If operation is not as specified, replace the VSV.

3. INSPECT VACUUM TANK (See page SF-58)

EM0ZM-02

INSTALLATION

1. ASSEMBLE ENGINE AND TRANSAXLE

2. INSTALL REAR ENGINE MOUNTING INSULATOR

Install the mounting insulator with the 4 bolts.

Torque: 64 N·m (650 kgf·cm, 47 ft·lbf)

3. INSTALL FRONT ENGINE MOUNTING INSULATOR

Install the mounting insulator with the 4 bolts.

Torque: 64 N·m (650 kgf·cm, 47 ft·lbf)

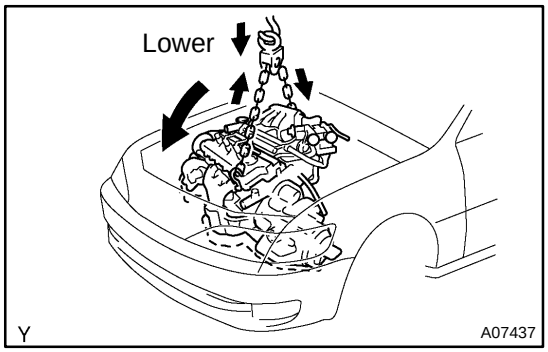

4. INSTALL ENGINE AND TRANSAXLE ASSEMBLY IN VEHICLE

(a) Attach the engine sling device to the engine hangers.

(b) Lower the engine into the engine compartment.

Tilt the transaxle downward, lower the engine and clear the LH mounting.

NOTICE:

Be careful not to hit the park/neutral position switch.

(c) Keep the engine level, and align RH and LH mountings with the body bracket.

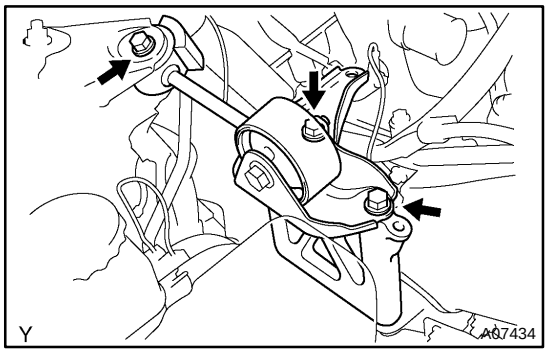

5. INSTALL NO.2 RH ENGINE MOUNTING BRACKET AND ENGINE MOVING CONTROL ROD

(a) Temporarily install the No.2 RH engine mounting bracket and engine moving control rod with the 3 bolts.

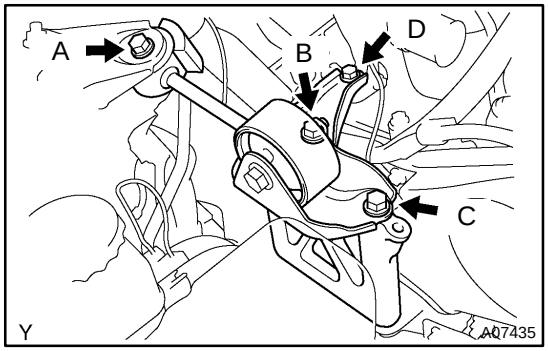

(b) Tighten the bolt (A).

Torque: 64 N·m (650 kgf·cm, 47 ft·lbf)

(c) Tighten the other 3 bolts (B, C and D).

Torque:

64 N·m (650 kgf·cm, 47 ft·lbf) for bolts B and C

32 N·m (320 kgf·cm, 23 ft·lbf) for bolt D

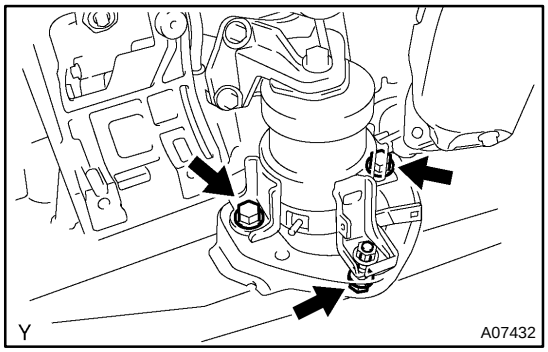

6. CONNECT FRONT ENGINE MOUNTING INSULATOR

Connect the mounting insulator with the 3 bolts.

Torque:

44 N·m (450 kgf·cm, 32 ft·lbf) for silver color bolt

66 N·m (670 kgf·cm, 49 ft·lbf) for green color bolt

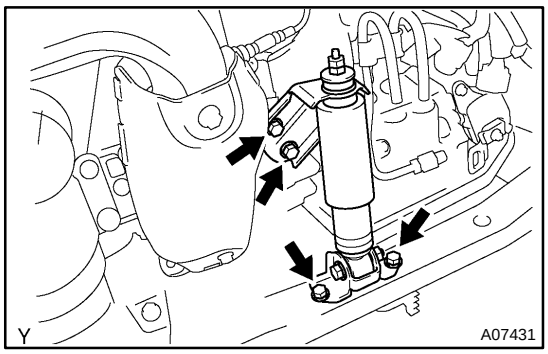

7. INSTALL ENGINE MOUNTING ABSORBER

Install the engine mounting absorber with the 4 bolts.

Torque: 48 N·m (490 kgf·cm, 35 ft·lbf)

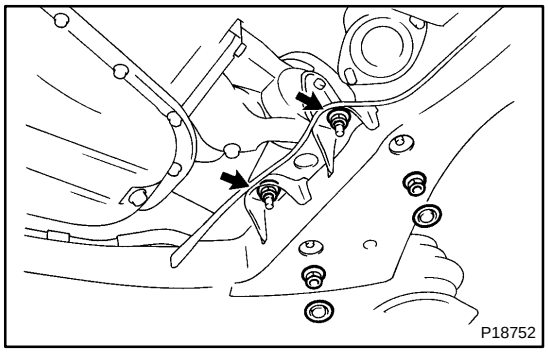

8. CONNECT REAR ENGINE MOUNTING INSULATOR

(a) Connect the mounting insulator with the 4 nuts.

Torque: 66 N·m (670 kgf·cm, 48 ft·lbf)

(b) Install the 2 hole plugs.

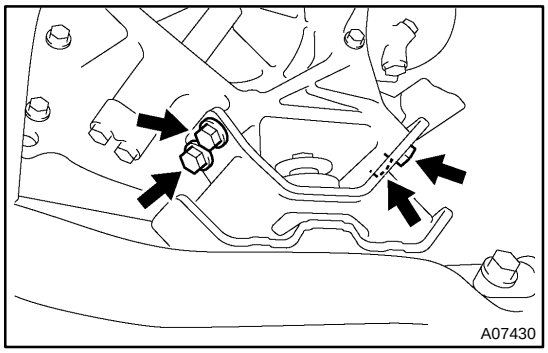

9. CONNECT LH ENGINE MOUNTING INSULATOR

Connect the mounting insulator with the 4 bolts.

Torque: 64 N·m (650 kgf·cm, 47 ft·lbf)

10. REMOVE ENGINE SLING DEVICE

11. CONNECT TRANSAXLE CONTROL CABLE TO TRANSAXLE

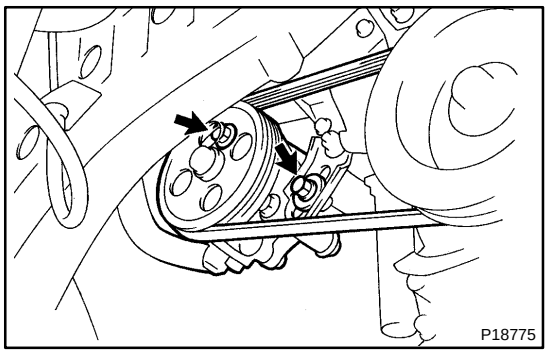

12. INSTALL PS PUMP

(a) Install the PS pump with the 2 bolts.

Torque: 43 N·m (440 kgf·cm, 31 ft·lbf)

(b) Install the drive belt.

(c) Connect the PS pressure tube with the 2 nuts.

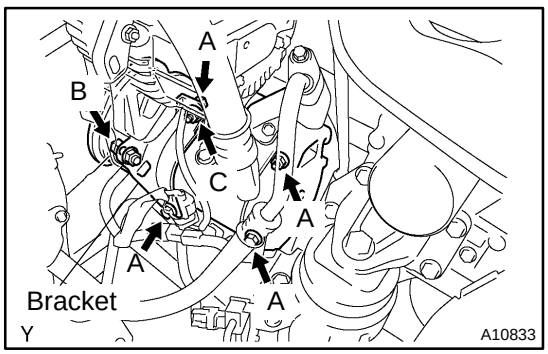

13. INSTALL A/C COMPRESSOR

(a) Install the A/C compressor and drive belt adjusting bar bracket with the 5 bolts and nut.

Torque:
25 N·m (250 kgf·cm, 18 ft·lbf) for bolt A
18 N·m (185 kgf·cm, 13 ft·lbf) for bolt B
25 N·m (250 kgf·cm, 18 ft·lbf) for nut C

(b) Install the drive belt.

(c) Connect the A/C compressor connector.

14. INSTALL DRIVE SHAFTS (See page SA-24)

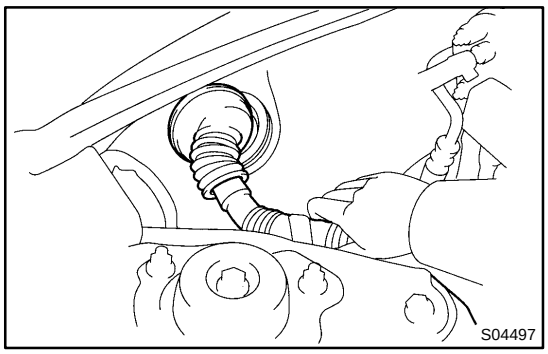

15. CONNECT ENGINE WIRE TO CABIN

(a) Push in the engine wire through the cowl panel. Install the grommet.
(b) Connect the 5 engine ECM connectors.
(c) Install the glove compartment.

16. CONNECT CONNECTORS, CABLE, CLAMPS AND HOSES

(a) Connect the noise filter connector on the LH fender apron.
(b) Connect the generator connector and wire.
(c) Connect the starter connector and wire.
(d) Connect the 2 ground strap connectors to the RH fender apron
(e) Connect the strap connector to the LH fender apron with the bolt.
(f) Connect the ground cable to the battery body bracket.
(g) Connect the engine wire protector clamp to the battery body bracket.
(h) Connect the engine wire clamp to the bracket on the RH fender apron.
(i) Connect the brake booster vacuum hose to the throttle body.
(j) Connect the engine coolant reservoir hose to the water outlet.
(k) Connect the heater hose to the intake manifold.
(l) Connect the heater hose to the water inlet housing.
(m) Connect the fuel inlet hose to the fuel filter.

CAUTION:
Perform connecting operations of the fuel tube connector (quick type) after observing the precautions.
(See page SF-1)

(n) Connect the EVAP hose assembly to the pipe on the emission control valve set.
(o) Connect the 2 vacuum hoses to the vacuum tank for the ACIS.

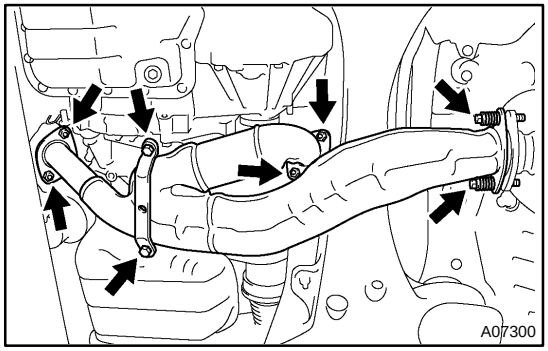

17. INSTALL FRONT EXHAUST PIPE

(a) Temporarily install 3 new gaskets and the front exhaust pipe with the 2 bolts, 2 compression springs and 4 nuts.
(b) Tighten the 4 nuts holding the exhaust manifolds to the front exhaust pipe.
Torque: 62 N·m (630 kgf·cm, 46 ft·lbf)
(c) Tighten the 2 bolts and 2 compression springs holding the front exhaust pipe to the center exhaust pipe.
Torque: 43 N·m (440 kgf·cm, 32 ft·lbf)

(d) Install the support stay with the 2 bolts.
Torque: 33 N·m (330 kgf·cm, 24 ft·lbf)

18. INSTALL RADIATOR (See page CO-22)

19. INSTALL CRUISE CONTROL ACTUATOR

20. INSTALL AIR CLEANER CAP ASSEMBLY AND AIR CLEANER CASE

21. CONNECT ACCELERATOR CABLE

22. INSTALL V-BANK COVER

(a) Using a 5 mm hexagon wrench, install the V-bank cover with the 3 cap nuts.

(b) Press down the V-bank cover fastener.

23. INSTALL ENGINE FENDER APRON SEALS

24. INSTALL BATTERY TRAY AND BATTERY

25. INSTALL HOOD

26. FILL ENGINE WITH OIL

27. FILL WITH ENGINE COOLANT

28. START ENGINE AND CHECK FOR LEAKS

29. PERFORM ROAD TEST

Check for abnormal noise, shock, slippage, correct shift points and smooth operation.

30. RECHECK ENGINE COOLANT AND OIL LEVELS

EM0ZL-02

REMOVAL

1. REMOVE BATTERY AND TRAY
2. REMOVE HOOD
3. REMOVE ENGINE FENDER APRON SEALS
4. DRAIN ENGINE COOLANT
5. DRAIN ENGINE OIL

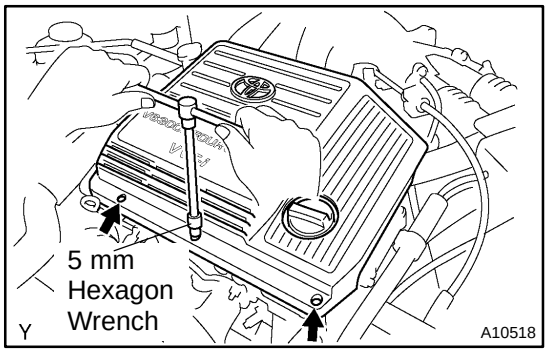

6. REMOVE V-BANK COVER

(a) Using a 5 mm hexagon wrench, remove the 3 cap nuts.
(b) Loosen the V-bank cover fastener counterclockwise.
(c) Remove the V-bank cover.

7. DISCONNECT ACCELERATOR CABLE
8. REMOVE AIR CLEANER CAP ASSEMBLY AND AIR CLEANER CASE
9. REMOVE CRUISE CONTROL ACTUATOR
10. REMOVE RADIATOR (See page CO-17)

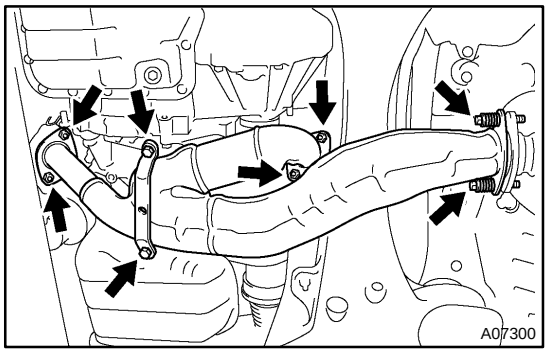

11. REMOVE FRONT EXHAUST PIPE

(a) Remove the 2 bolts holding the support stay to the support bracket.
(b) Remove the 2 bolts and 2 compression springs holding the front exhaust pipe to the center exhaust pipe.
(c) Remove the 4 nuts holding the front exhaust pipe to the exhaust manifolds.
(d) Remove the front exhaust pipe and 3 gaskets.

12. DISCONNECT CONNECTORS, CABLE, CLAMPS AND HOSES

(a) Remove the bolt and disconnect the ground strap from the LH fender apron.
(b) Disconnect the 2 ground strap connectors from the RH fender apron.
(c) Disconnect the ground cable from the A/T.
(d) Disconnect the engine wire protector clamp from the battery body bracket.
(e) Disconnect the engine wire clamp from the bracket on the RH fender apron.
(f) Disconnect the brake booster vacuum hose from the throttle body.
(g) Disconnect the engine coolant reservoir hose from the water outlet.
(h) Disconnect the heater hose from the intake manifold.
(i) Disconnect the heater hose from the water inlet housing.

(j) Disconnect the fuel inlet hose from the fuel filter.

CAUTION:
Perform disconnecting operation of the fuel tube connector (quick type) after observing the precautions (See page SF-1).

(k) Disconnect the EVAP hose assembly from the pipe on the emission control valve set.

(l) Disconnect the 2 vacuum hoses from the vacuum tank for the ACIS.

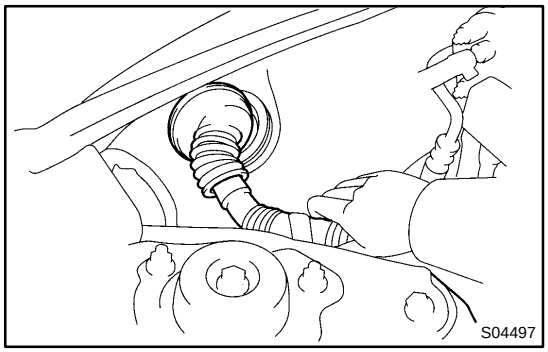

13. DISCONNECT ENGINE WIRE FROM CABIN

(a) Remove the glove compartment.

(b) Disconnect the 5 ECM connectors.

(c) Disconnect the grommet from the cowl panel, and pull out the engine wire.

14. REMOVE DRIVE SHAFTS (See page SA-16)

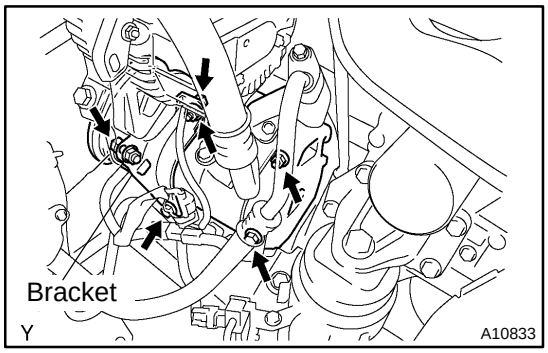

15. DISCONNECT A/C COMPRESSOR FROM ENGINE

(a) Disconnect the A/C compressor connector.

(b) Remove the drive belt.

(c) Remove the 5 bolts, nut and drive belt adjusting bar bracket.

(d) Disconnect the A/C compressor from the engine.

16. DISCONNECT TRANSAXLE CONTROL CABLE FROM TRANSAXLE

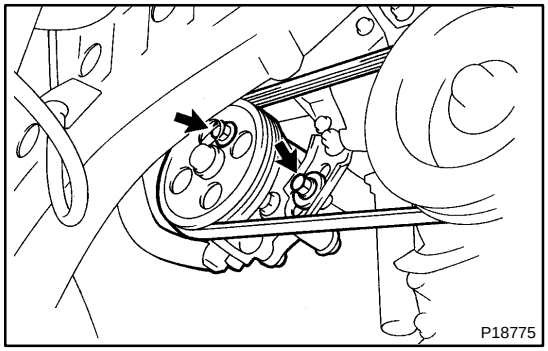

17. DISCONNECT PS PUMP FROM ENGINE

(a) Remove the 2 nuts, and disconnect the PS pressure tube from the No.1 engine hanger.

(b) Loosen the 2 bolts, and remove the drive belt.

(c) Remove the 2 bolts, and disconnect the PS pump from the engine.

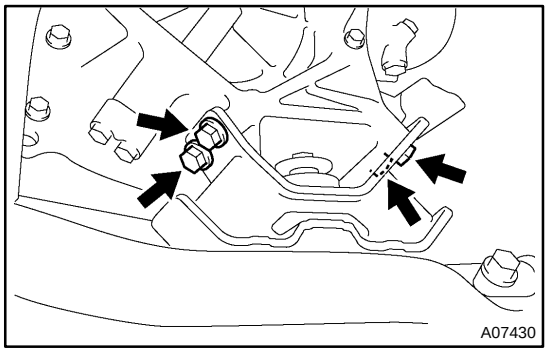

18. DISCONNECT TRANSAXLE FROM LH ENGINE MOUNTING INSULATOR

Remove the 4 bolts holding the transaxle to the mounting insulator.

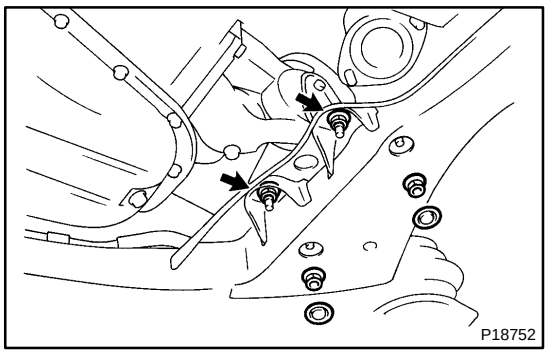

19. DISCONNECT REAR ENGINE MOUNTING BRACKET FROM FRONT FRAME

(a) Remove the 2 hole plugs.

(b) Remove the 4 nuts holding the front frame to the mounting bracket.

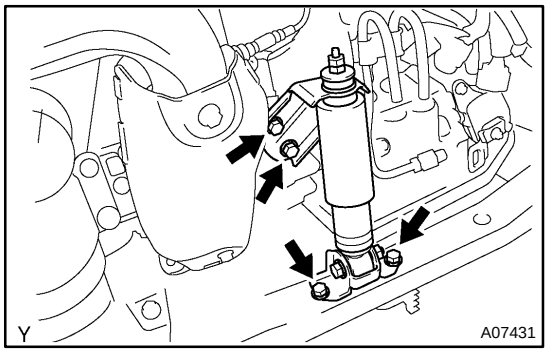

20. REMOVE ENGINE MOUNTING ABSORBER

Remove the 4 bolts and mounting absorber.

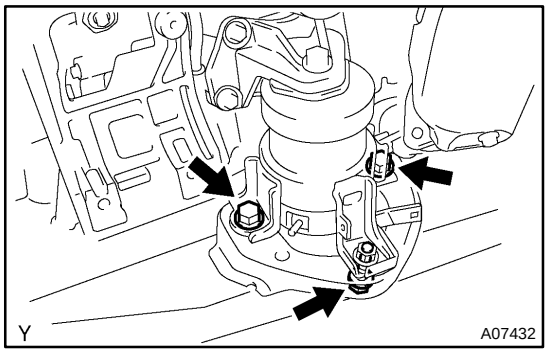

21. DISCONNECT FRONT ENGINE MOUNTING INSULATOR FROM FRONT FRAME

Remove the 3 bolts holding the mounting insulator to the front frame.

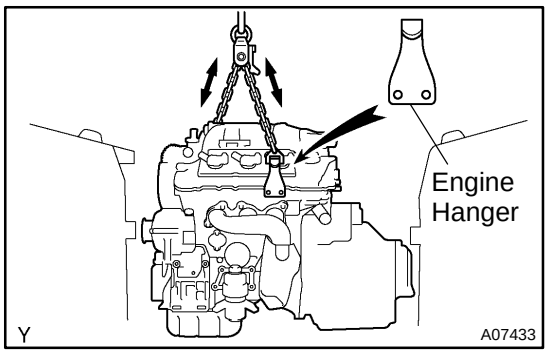

22. ATTACH ENGINE SLING DEVICE TO ENGINE HANGERS

(a) Install the No.2 engine hanger in the correct direction.

Part No.:

No.2 engine hanger	12282-20020
Bolt	90080-11331

Torque: 19.5 N·m (200 kgf·cm, 14 ft·lbf)

(b) Attach the sling device to the engine hangers.

CAUTION:

Do not attempt to hang the engine by hooking the chain to any other part.

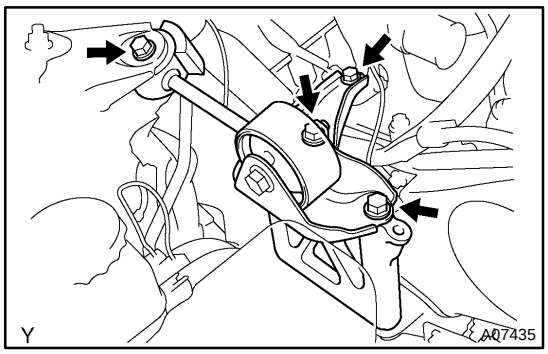

23. REMOVE ENGINE MOVING CONTROL ROD AND NO.2 RH ENGINE MOUNTING BRACKET

Remove the 4 bolts, control rod and mounting bracket.

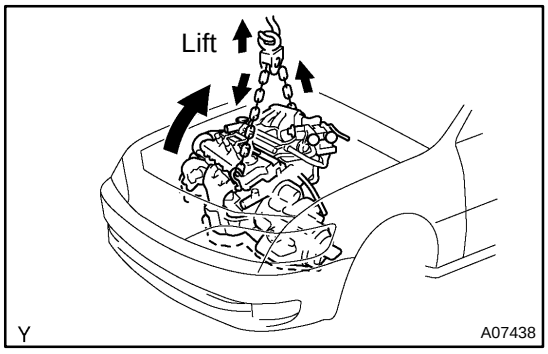

24. REMOVE ENGINE AND TRANSAXLE ASSEMBLY FROM VEHICLE

(a) Lift the engine out of the vehicle slowly and carefully.

NOTICE:

- **Be careful not to hit the PNP switch.**
- **Make sure the engine is clear of all wiring, hoses and cables.**

(b) Place the engine and transaxle assembly onto the stand.

25. REMOVE FRONT ENGINE MOUNTING INSULATOR FROM ENGINE

Remove the 4 bolts and mounting insulator.

26. REMOVE REAR ENGINE MOUNTING INSULATOR AND BRACKET ASSEMBLY FROM ENGINE

Remove the 4 bolts, the mounting insulator and bracket assembly.

27. SEPARATE ENGINE AND TRANSAXLE

EXHAUST SYSTEM

COMPONENTS

EM0ZR-02

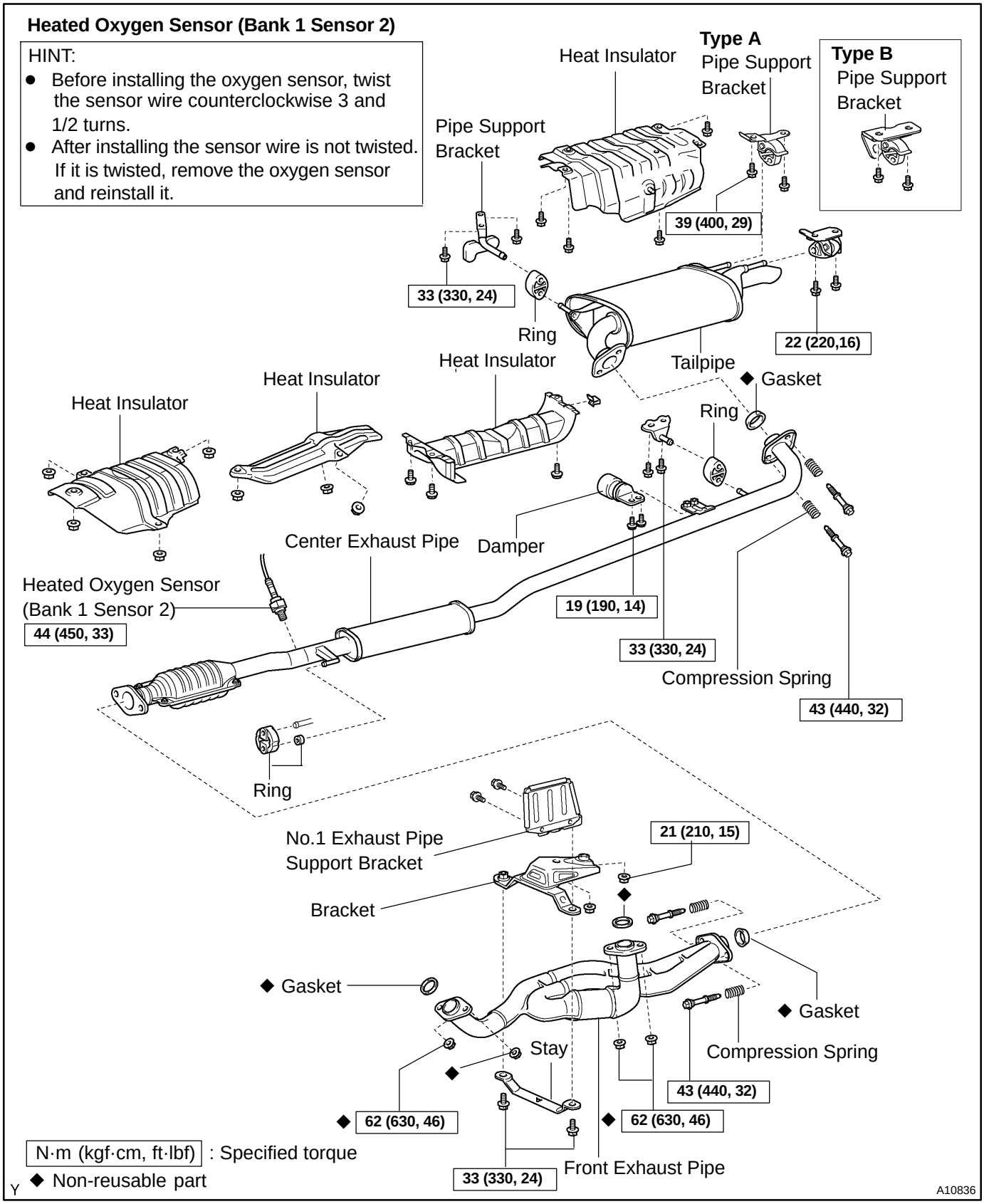

IDLE SPEED

EM0CF-02

INSPECTION

1. INITIAL CONDITIONS

(a) Engine at normal operating temperature
(b) Air cleaner installed
(c) All pipes and hoses of air induction system connected
(d) All accessories switched OFF
(e) All vacuum lines properly connected
(f) SFI system wiring connectors fully plugged
(g) Ignition timing check correctly
(h) Transmission in neutral position
(i) Air conditioning switched OFF

2. CONNECT TOYOTA HAND-HELD TESTER OR OBDII SCAN TOOL (See page EM-10)

3. INSPECT IDLE SPEED

(a) Race the engine speed at 2,500 rpm for approx. 90 seconds.
(b) Check the idle speed.

Idle speed: 650 ± 50 rpm

If the idle speed is not as specified, check the IAC valve and air intake system.

4. DISCONNECT TOYOTA HAND-HELD TESTER OR OBDII SCAN TOOL

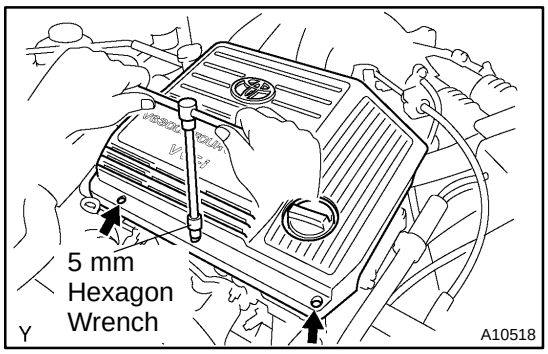

IGNITION TIMING

EM15O-01

INSPECTION

1. REMOVE V-BANK COVER

(a) Using a 5 mm hexagon wrench, remove the 3 cap nuts.
(b) Loosen the V-bank cover fastener counterclockwise.
(c) Remove the V-bank cover.

2. WARM UP ENGINE

Allow the engine to warm up to normal operating temperature.

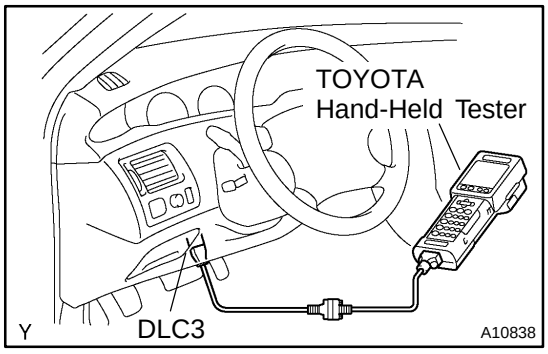

3. CONNECT TOYOTA HAND-HELD TESTER OR OBDII SCAN TOOL

(a) Connect the TOYOTA hand-held tester or OBDII scan tool to the DLC3.
(b) Please refer to the TOYOTA hand-held tester or OBDII scan tool operator's manual for further details.

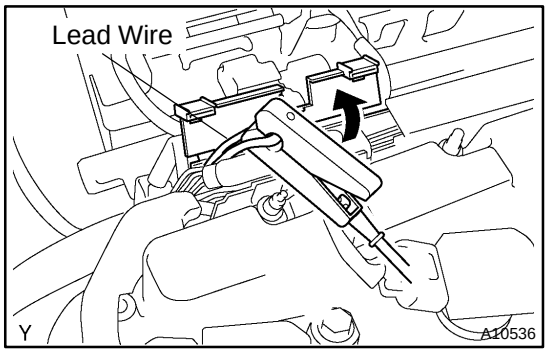

4. CONNECT TIMING LIGHT TO ENGINE

Connect the clip of a timing light to the lead wire as shown.

5. CHECK IDLE SPEED

(a) Race the engine speed at 2,500 rpm for approx. 90 seconds.
(b) Check the idle speed.
Idle speed: 650 ± 50 rpm

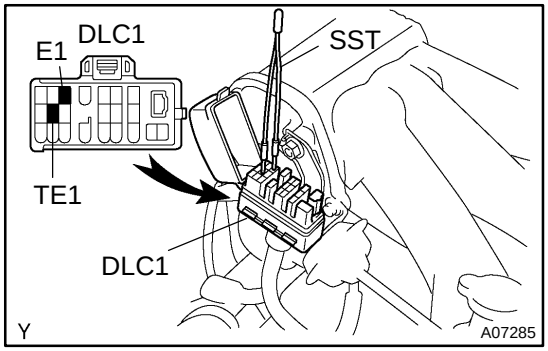

6. INSPECT IGNITION TIMING

(a) Using SST, connect terminals TE1 and E1 of the DLC1.
SST 09843-18020

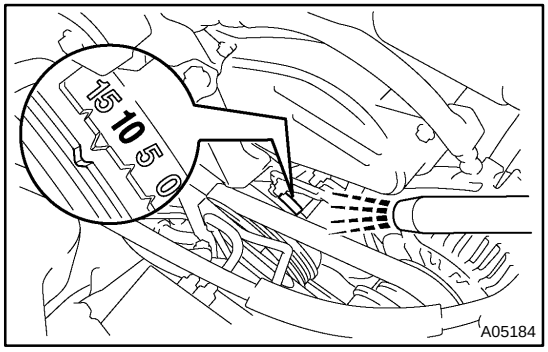

(b) Using a timing light, check the ignition timing.
Ignition timing: 8 - 12˚ BTDC @ idle
(Transmission in neutral position)
(c) Remove the SST from the DLC1.
SST 09843-18020

7. FURTHER CHECK IGNITION TIMING
Ignition timing: 10 - 25° BTDC @ idle
(Transmission in neutral position)

HINT:

The timing mark moves in a range between 10° and 25°.

8. DISCONNECT TIMING LIGHT FROM ENGINE

9. DISCONNECT TOYOTA HAND- HELD TESTER OR OBDII SCAN TOOL

10. REINSTALL V-BANK COVER

(a) Using a 5 mm hexagon wrench, install the V-bank cover with the 3 cap nuts.

(b) Press down the V-bank cover fastener.

TIMING BELT

COMPONENTS

EM03Y-03

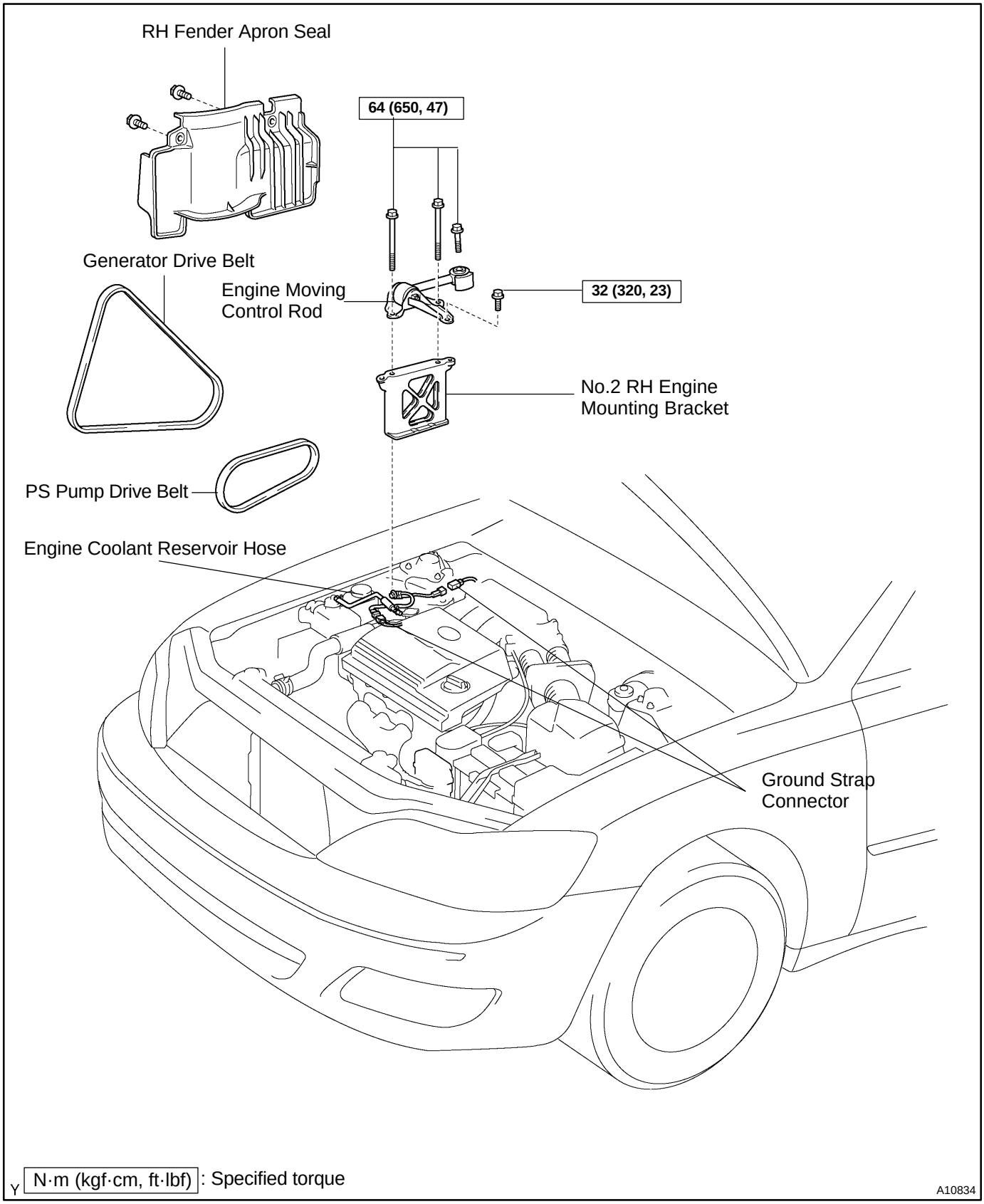

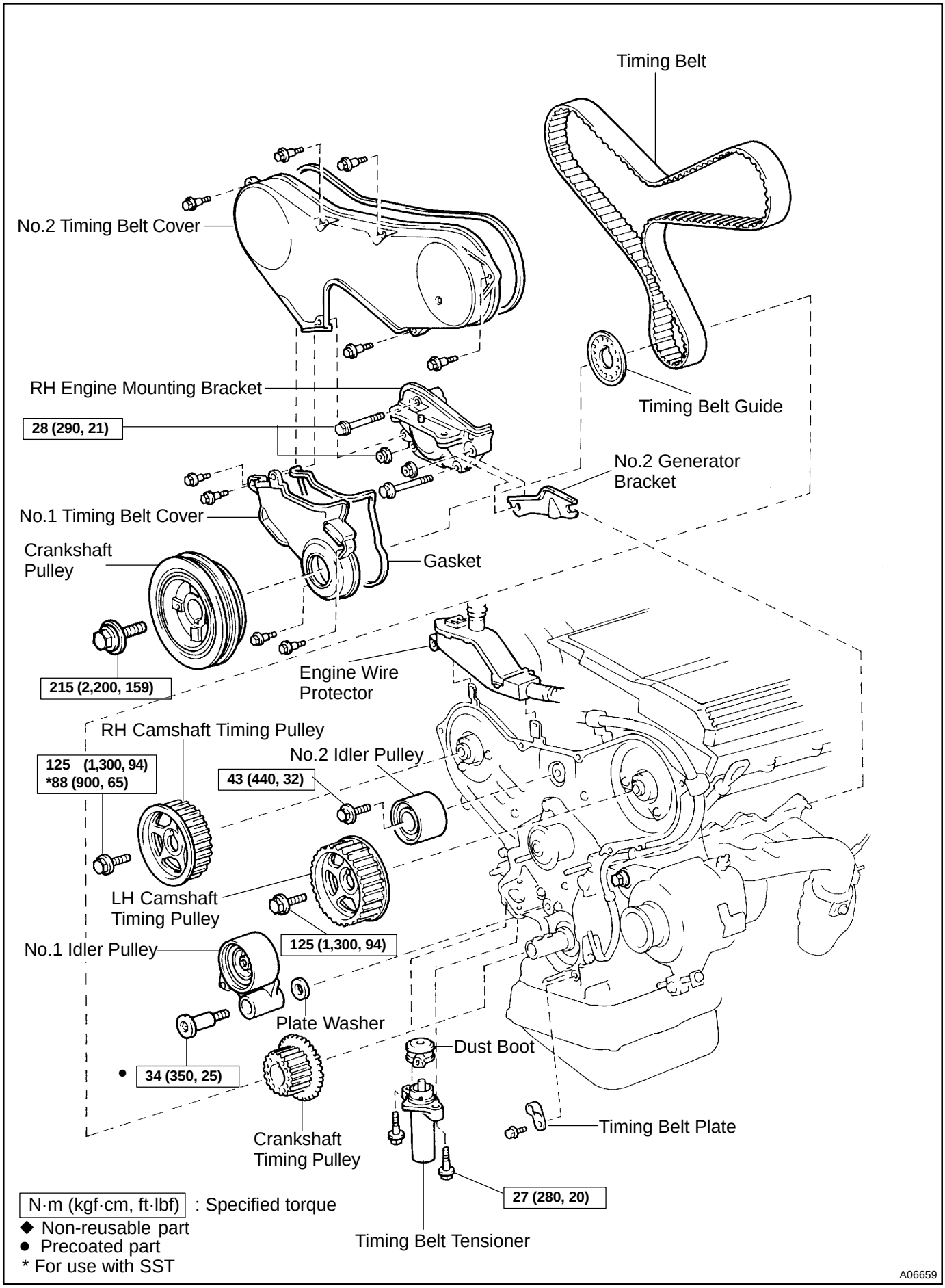
Timing Belt
No.2 Timing Belt Cover
RH Engine Mounting Bracket
28 (290, 21)
Timing Belt Guide
No.2 Generator Bracket
No.1 Timing Belt Cover
Crankshaft Pulley
Gasket
215 (2,200, 159)
Engine Wire Protector
RH Camshaft Timing Pulley
125 (1,300, 94)
*88 (900, 65)
No.2 Idler Pulley
43 (440, 32)
LH Camshaft Timing Pulley
125 (1,300, 94)
No.1 Idler Pulley
Plate Washer
Dust Boot
34 (350, 25)
Timing Belt Plate
Crankshaft Timing Pulley
27 (280, 20)
Timing Belt Tensioner
N·m (kgf·cm, ft·lbf) : Specified torque
◆ Non-reusable part
● Precoated part
* For use with SST
A06659

EM0ZC-02

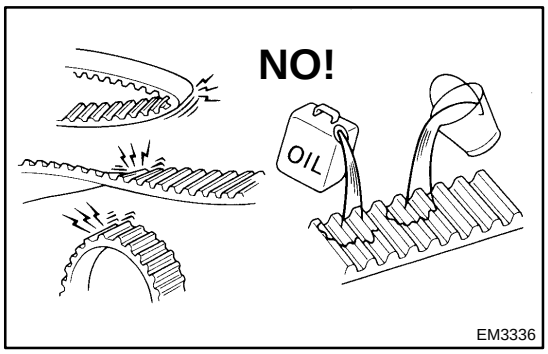

INSPECTION

1. INSPECT TIMING BELT

NOTICE:

- **Do not bend, twist or turn the timing belt inside out.**
- **Do not allow the timing belt to come into contact with oil, water or steam.**
- **Do not utilize timing belt tension when installing or removing the mount bolt of the camshaft timing pulley.**

If there are any defects, as shown in the illustrations, check these points:

(a) Premature parting
- Check for proper installation.
- Check the timing cover gasket for damage and proper installation.

(b) If the belt teeth are cracked or damaged, check to see if either camshaft is locked.

(c) If there is noticeable wear or cracks on the belt face, check to see if there are nicks on the side of the idler pulley lock and water pump.

(d) If there is wear or damage on only one side of the belt, check the belt guide and the alignment of each pulley.

(e) If there is noticeable wear on the belt teeth, check timing cover for damage and check gasket has been installed correctly and for foreign material on the pulley teeth.

If necessary, replace the timing belt.

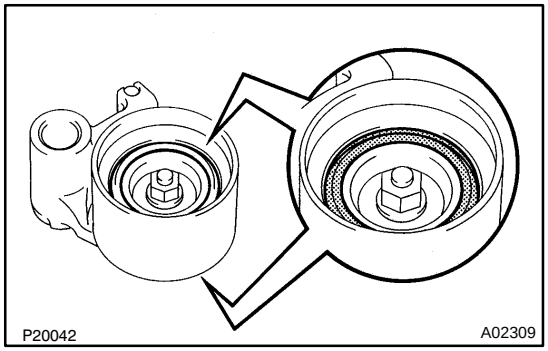

2. INSPECT IDLER PULLEYS

(a) Visually check the seal portion of the idler pulley for oil leakage.

If leakage is found, replace the idler pulley.

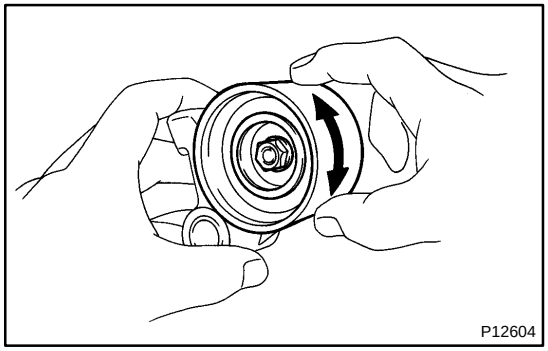

(b) Check that the idler pulley turns smoothly.

If necessary, replace the idler pulley.

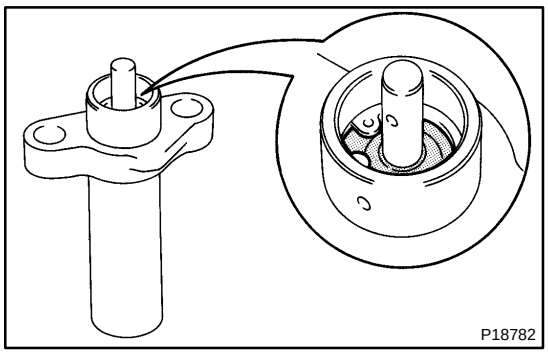

3. INSPECT TIMING BELT TENSIONER

(a) Visually check the seal portion of the tensioner for oil leakage.

HINT:

If there is only the faintest trace of oil on the seal on the push rod side, the tensioner is all right.

If leakage is found, replace the tensioner.

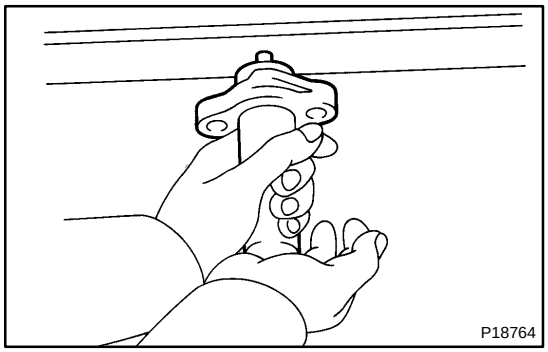

(b) Hold the tensioner with both hands and push the push rod strongly as shown to check that it doesn't move.

If the push rod moves, replace the tensioner.

NOTICE:

Never hold the tensioner push rod facing downward.

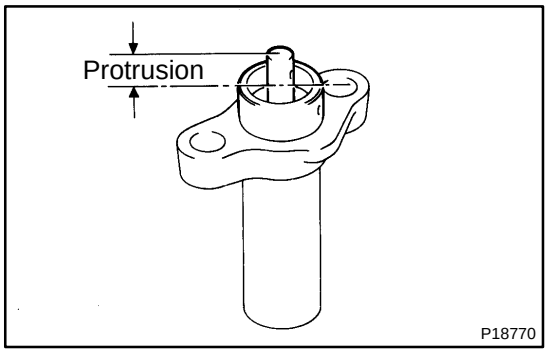

(c) Measure the protrusion of the push rod from the housing end.

Protrusion: 10.0 - 10.8 mm (0.394 - 0.425 in.)

If the protrusion is not as specified, replace the tensioner.

EM0ZD-02

INSTALLATION

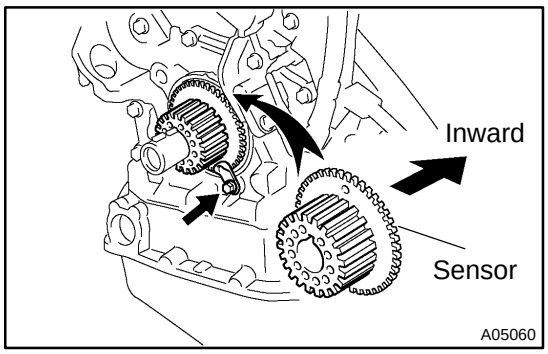

1. INSTALL CRANKSHAFT TIMING PULLEY

(a) Align the pulley set key with the key groove of the timing pulley, and slide on the timing pulley.

(b) Install the timing pulley, facing the sensor side inward.

NOTICE:

Do not scratch the sensor part of the crankshaft timing pulley.

(c) Install the timing belt plate with the bolt.

Torque: 8 N·m (80 kgf·cm, 69 in.·lbf)

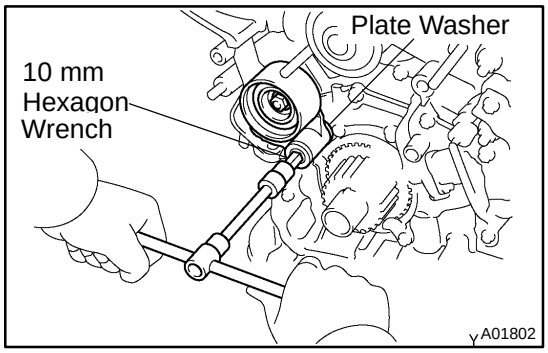

2. INSTALL NO.1 IDLER PULLEY

Adhesive: Part No. 08833-00080, THREE BOND 1344, LOCTITE 242 or equivalent

(a) Using a 10 mm hexagon wrench, install the plate washer and idler pulley with the pivot bolt.

Torque: 34 N·m (350 kgf·cm, 25 ft·lbf)

(b) Check that the pulley bracket moves smoothly.

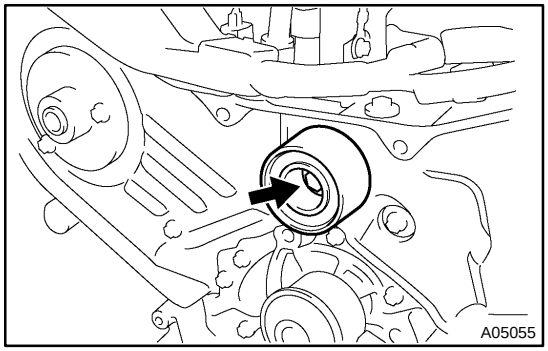

3. INSTALL NO.2 IDLER PULLEY

(a) Install the idler pulley with the bolt.

Torque: 43 N·m (440 kgf·cm, 32 ft·lbf)

(b) Check that the idler pulley moves smoothly.

4. INSTALL RH CAMSHAFT TIMING PULLEY

(a) Face the flange side of the timing pulley outward.

(b) Align the knock pin on the camshaft with the knock pin groove of the timing pulley, and slide on the timing pulley.

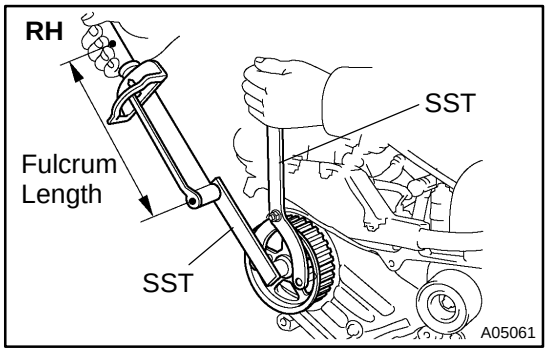

(c) Using SST, install the pulley bolt.

SST 09249-63010, 09960-10010 (09962-01000, 09963-01000)

Torque: 88 N·m (900 kgf·cm, 65 ft·lbf)

HINT:

Use a torque wrench with a fulcrum length of 340 mm (13.39 in.).

5. INSTALL LH CAMSHAFT TIMING PULLEY

(a) Face the flange side of the timing pulley inward.

(b) Align the knock pin on the camshaft with the knock pin groove of the timing pulley, and slide on the timing pulley.

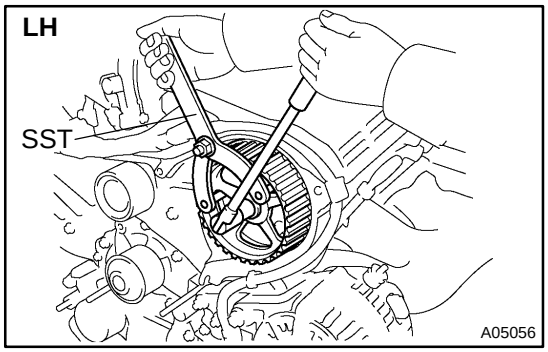

(c) Using SST, install the pulley bolt.
SST 09960-10010 (09962-01000, 09963-01000)
Torque: 125 N·m (1,300 kgf·cm, 94 ft·lbf)

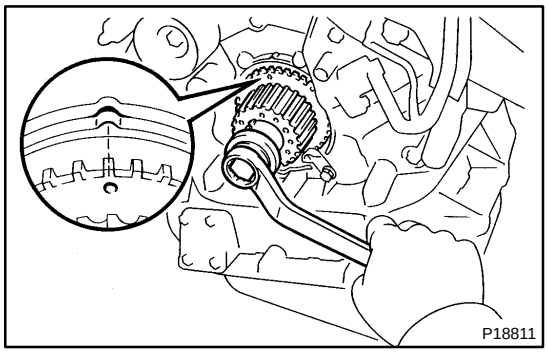

6. SET NO.1 CYLINDER TO TDC/COMPRESSION

(a) Crankshaft Timing Pulley Position:

(1) Temporarily install the crankshaft pulley bolt to the crankshaft.

(2) Turn the crankshaft, and align the timing marks of the crankshaft timing pulley and oil pump body.

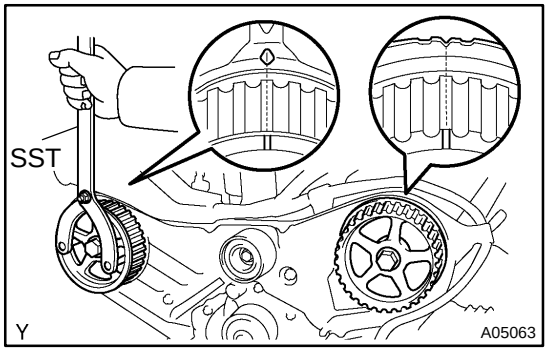

(b) Camshaft Timing Pulley Positions:
Using SST, turn the camshaft pulley, align the timing marks of the timing pulley and No.3 timing belt cover.
SST 09960-10010 (09962-01000, 09963-01000)

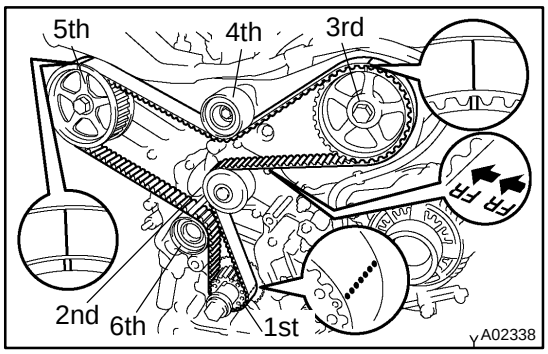

7. INSTALL TIMING BELT

NOTICE:

The engine should be cold.

(a) Remove any oil or water on the pulleys, and keep them clean.

NOTICE:

Only wipe the pulleys; do not use any cleansing agent.

(b) Face the front mark on the timing belt forward.

(c) Align the installation mark on the timing belt with the timing mark of the crankshaft timing pulley.

(d) Align the installation marks on the timing belt with the timing marks of the camshaft timing pulleys.

(e) Install the timing belt in this order:
1st: Crankshaft timing pulley
2nd: Water pump pulley
3rd: LH camshaft timing pulley
4th: No.2 idler pulley
5th: RH camshaft timing pulley
6th: No.1 idler pulley

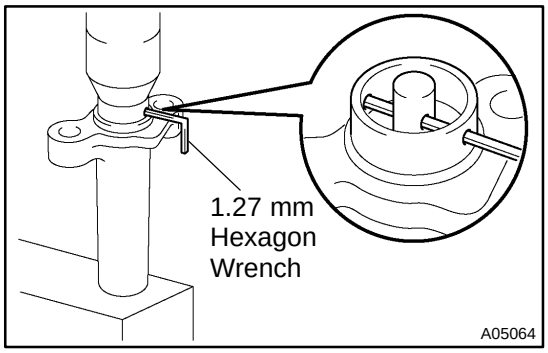

8. SET TIMING BELT TENSIONER

(a) Using a press, slowly press in the push rod using 981 - 9,807 N (100 - 1,000 kgf, 200 - 2,205 lbf) of pressure.

(b) Align the holes of the push rod and housing, pass a 1.27 mm hexagon wrench through the holes to keep the setting position of the push rod.

(c) Release the press.

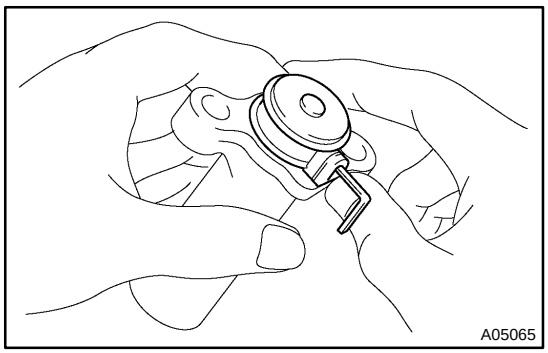

(d) Install the dust boot to the tensioner.

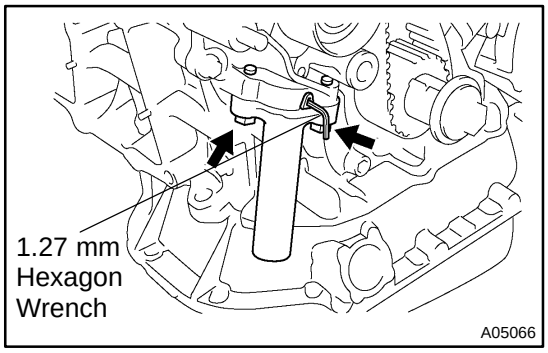

9. INSTALL TIMING BELT TENSIONER

(a) Temporarily install the tensioner with the 2 bolts.

(b) Alternately tighten the 2 bolts.
Torque: 27 N·m (280 kgf·cm, 20 ft·lbf)

(c) Remove the 1.27 mm hexagon wrench from the tensioner.

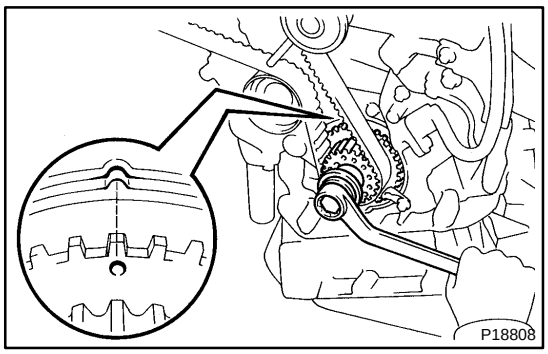

10. CHECK VALVE TIMING

(a) Slowly turn the crankshaft 2 revolutions, and align the timing marks of the crankshaft timing pulley and oil pump body.

NOTICE:

Always turn the crankshaft clockwise.

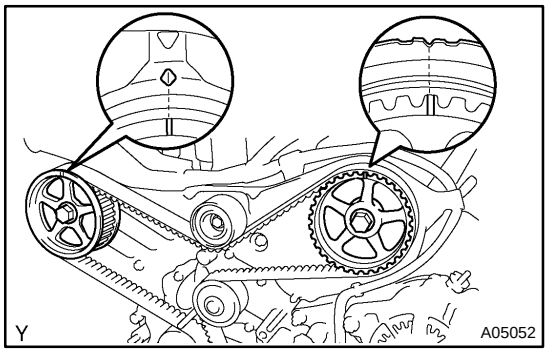

(b) Check that the timing marks of the RH and LH timing pulleys with the timing marks of the No.3 timing belt cover as shown in the illustration.

If the marks do not align, remove the timing belt and reinstall it.

(c) Remove the crankshaft pulley bolt.

11. INSTALL RH ENGINE MOUNTING BRACKET

Torque: 28 N·m (290 kgf·cm, 21 ft·lbf)

12. INSTALL NO.2 TIMING BELT COVER

(a) Check that the timing belt cover gasket has no cracks or peeling, etc.

If the gasket has cracks or peeling, etc., replace it using these steps:

- Using a screwdriver and gasket scraper, remove all the old gasket material.
- Thoroughly clean all components to remove all the loose material.

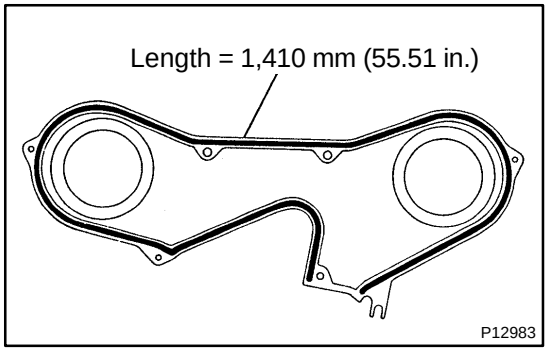

- Remove the backing paper from a new gasket and install the gasket evenly to the part of the timing belt cover shaded black in the illustration.
- After installing the gasket, press down on it so that the adhesive firmly sticks to the timing belt cover.

(b) Install the timing belt cover with the 5 bolts.

Torque: 8.5 N·m (85 kgf·cm, 74 in.·lbf)

(c) Install the engine wire protector clamps to the No.3 timing belt cover.

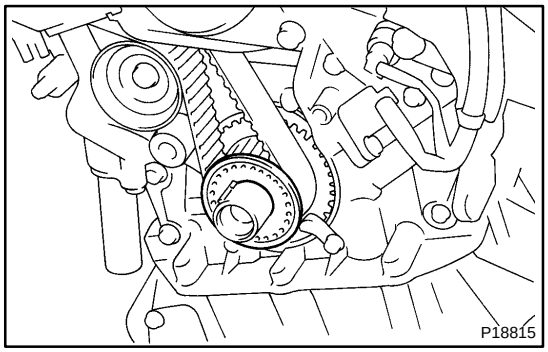

13. INSTALL TIMING BELT GUIDE

Install the timing belt guide, facing the cup side outward.

14. INSTALL NO.1 TIMING BELT COVER

(a) Check that the timing belt cover gaskets have cracks or peeling, etc.

If the gasket has cracks or peeling, etc., replace it using these steps:

- Using a screwdriver and gasket scraper, remove all the old gasket material.
- Thoroughly clean all components to remove all the loose material.

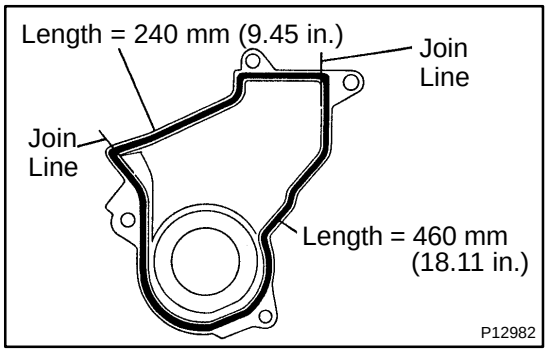

- Remove the backing paper from a new gasket and install the gasket evenly to the part of the timing belt cover shaded black in the illustration.

NOTICE:

When joining 2 gaskets, do not leave a gap between them. Cut off any excess gasket.

- After installing the gasket, press down on it so that the adhesive firmly sticks to the timing belt cover.

(b) Install the timing belt cover with the 4 bolts.

Torque: 8.5 N·m (85 kgf·cm, 74 in.·lbf)

15. INSTALL CRANKSHAFT PULLEY

(a) Align the pulley set key with the key groove of the pulley, and slide on the pulley.

(b) Using SST, install the pulley bolt.

SST 09213-54015 (91651-60855), 09330-00021

Torque: 215 N·m (2,200 kgf·cm, 159 ft·lbf)

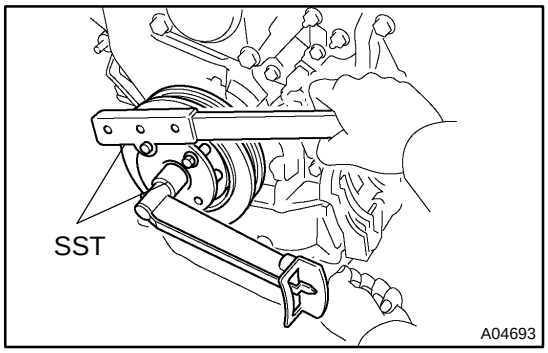

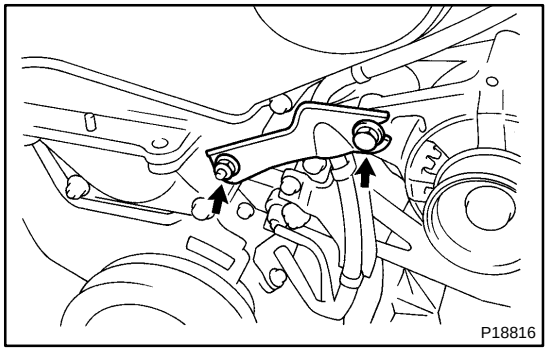

16. INSTALL NO.2 GENERATOR BRACKET

Install the generator bracket with the pivot bolt and nut. Do not tighten the bolt yet.

Torque: (Nut): 28 N·m (290 kgf·cm, 21 ft·lbf)

17. INSTALL NO.2 RH ENGINE MOUNTING BRACKET AND ENGINE MOVING CONTROL ROD

(See page EM-77)

18. CONNECT GROUND STRAP CONNECTORS

19. CONNECT ENGINE COOLANT RESERVOIR HOSE TO WATER OUTLET

20. INSTALL PS PUMP DRIVE BELT

21. INSTALL GENERATOR DRIVE BELT

(See page CH-16)

22. INSTALL RH FENDER APRON SEAL

23. INSTALL RH FRONT WHEEL

24. VEHICLE ROAD TEST

Check for abnormal noise, shock, slippage, correct shift points and smoothly operation.

EM03Z-03

REMOVAL

1. **REMOVE RH FRONT WHEEL**
2. **REMOVE RH FENDER APRON SEAL**
3. **REMOVE GENERATOR DRIVE BELT**
   (See page CH-6)

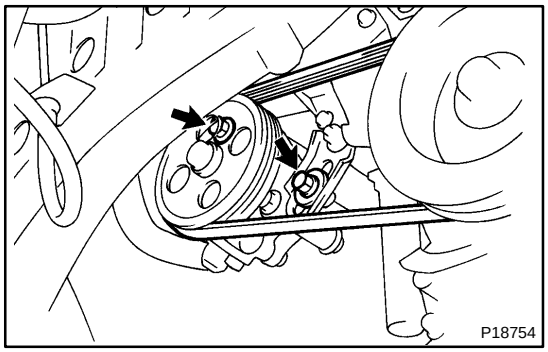

4. **REMOVE PS PUMP DRIVE BELT**

Loosen the 2 bolts, and remove the drive belt.

5. **DISCONNECT ENGINE COOLANT RESERVOIR HOSE FROM WATER OUTLET**
6. **DISCONNECT GROUND STRAP CONNECTORS**
7. **REMOVE ENGINE MOVING CONTROL ROD AND NO.2 RH ENGINE MOUNTING BRACKET**
   (See page EM-72)

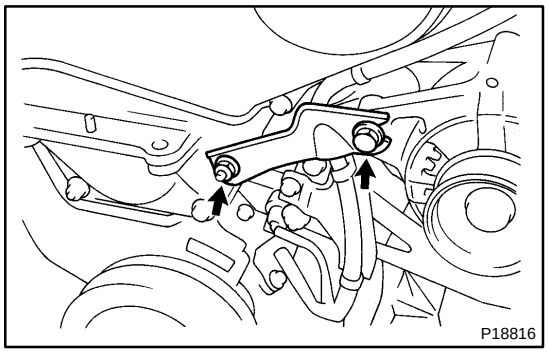

8. **REMOVE NO.2 GENERATOR BRACKET**

(a) Loosen the generator pivot bolt.

(b) Remove the nut and bracket.

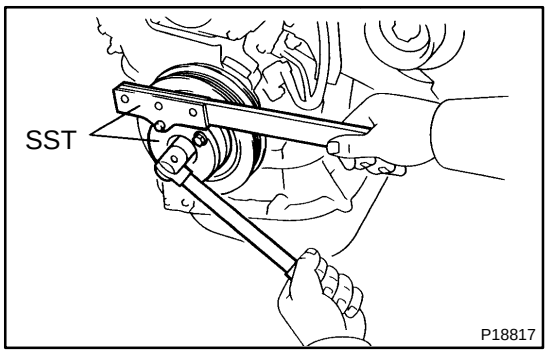

9. **REMOVE CRANKSHAFT PULLEY**

(a) Using SST, remove the pulley bolt.
SST 09213-54015 (91651-60855), 09330-00021

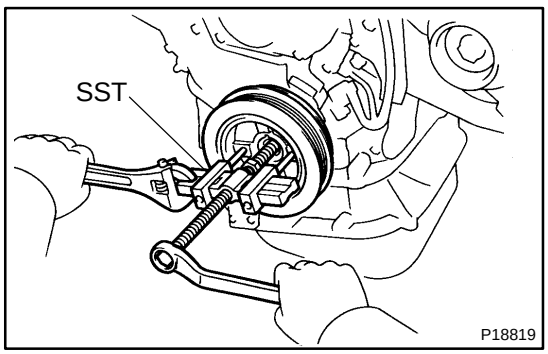

(b) Using SST, remove the pulley.
SST 09950-50012 (09951-05010, 09952-05010, 09953-05010, 09953-05020, 09954-05020)

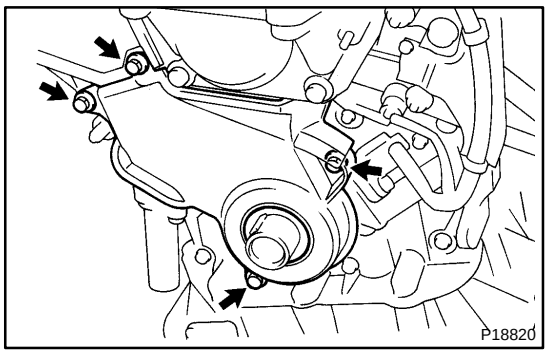

10. REMOVE NO.1 TIMING BELT COVER

Remove the 4 bolts and timing belt cover.

11. REMOVE TIMING BELT GUIDE

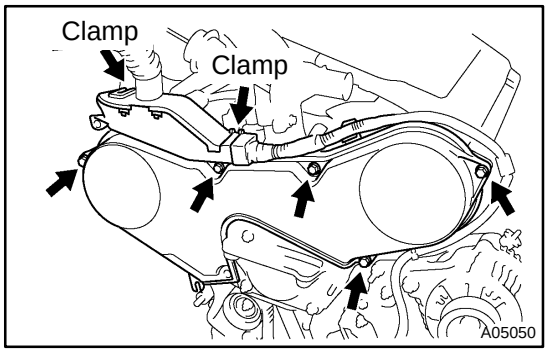

12. REMOVE NO.2 TIMING BELT COVER

(a) Disconnect the engine wire protector clamps from the No.3 timing belt cover.

(b) Remove the 5 bolts and timing belt cover.

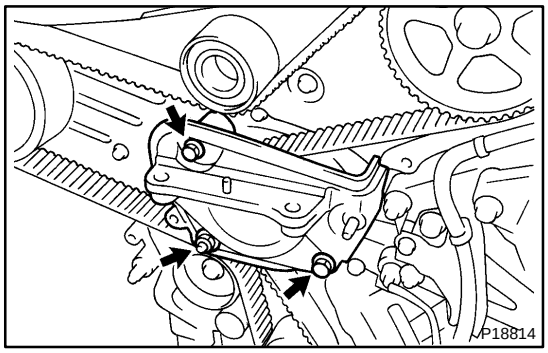

13. REMOVE RH ENGINE MOUNTING BRACKET

Remove the 2 bolts, nut and mounting bracket.

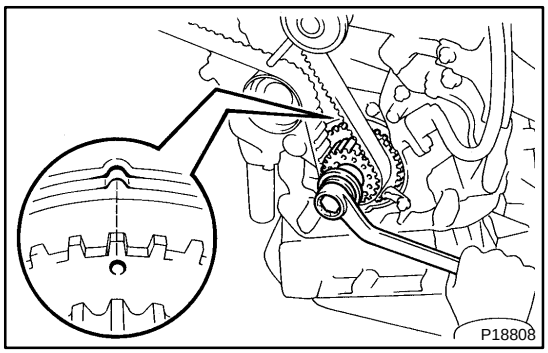

14. SET NO.1 CYLINDER TO TDC/COMPRESSION

(a) Temporarily install the crankshaft pulley bolt to the crankshaft.

(b) Turn the crankshaft, and align the timing marks of the crankshaft timing pulley and oil pump body.

NOTICE:

Always turn the crankshaft clockwise.

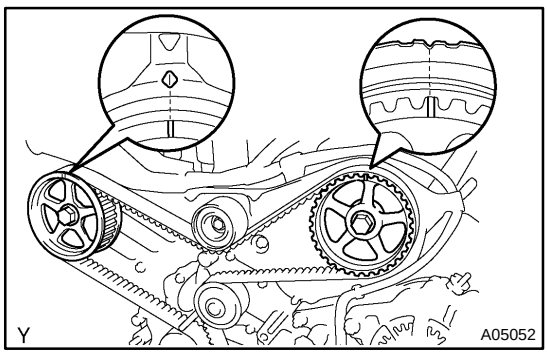

(c) Check that timing marks of the camshaft timing pulleys and No.3 timing belt cover are aligned.

If not, turn the crankshaft 1 revolution (360˚).

(d) Remove the crankshaft pulley bolt.

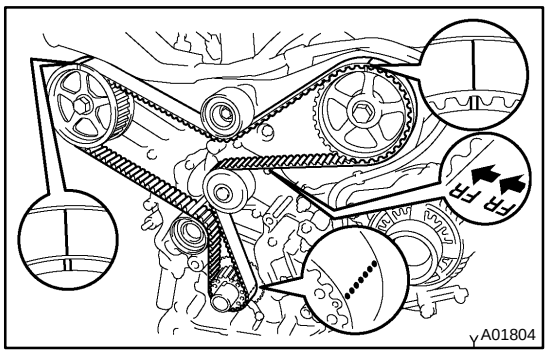

15. IF REUSING TIMING BELT, CHECK INSTALLATION MARKS ON TIMING BELT

Check that there are 3 installation marks and front mark on the timing belt.

If the installation and front marks have disappeared, before removing the timing belt, place 3 new installation marks on the timing belt to match the timing marks of the timing pulleys, and place a new front mark on the timing belt.

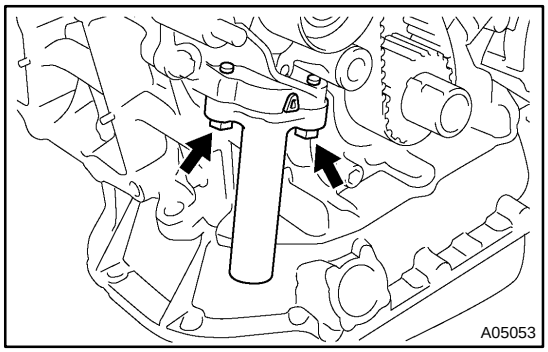

16. REMOVE TIMING BELT TENSIONER

Alternately loosen the 2 bolts, and remove them, the tensioner and dust boot.

17. REMOVE TIMING BELT

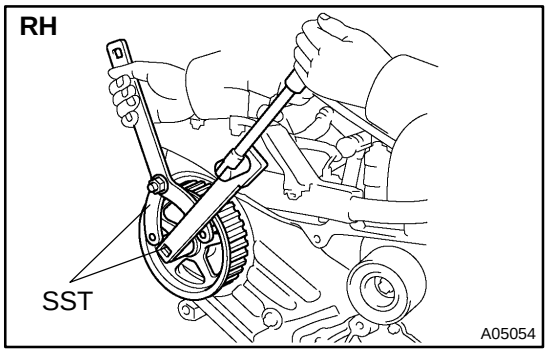

18. REMOVE CAMSHAFT TIMING PULLEYS

(a) Using SST, remove the bolt and RH timing pulley.
SST 09249-63010, 09960-10010 (09962-01000, 09963-01000)

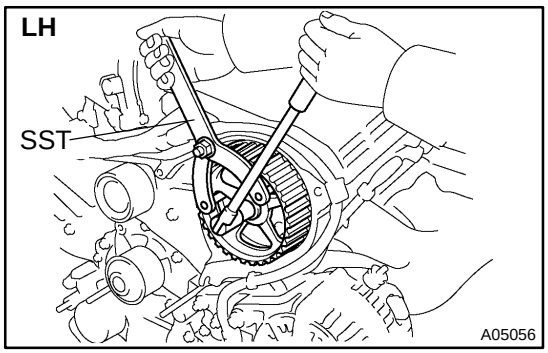

(b) Using SST, remove the LH timing pulley.
SST 09960-10010 (09962-01000, 09963-01000)

HINT:

Arrange the camshaft timing pulleys (RH and LH sides).

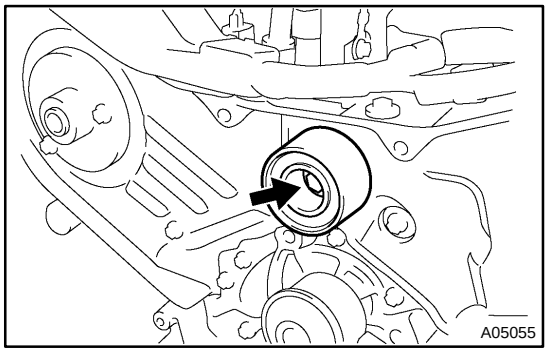

19. REMOVE NO.2 IDLER PULLEY

Remove the bolt and idler pulley.

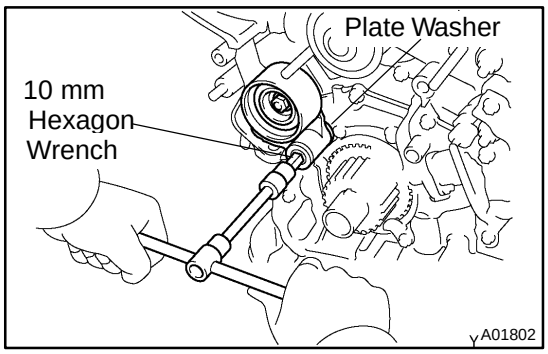

20. REMOVE NO.1 IDLER PULLEY

Using a 10 mm hexagon wrench, remove the bolt, idler pulley and plate washer.

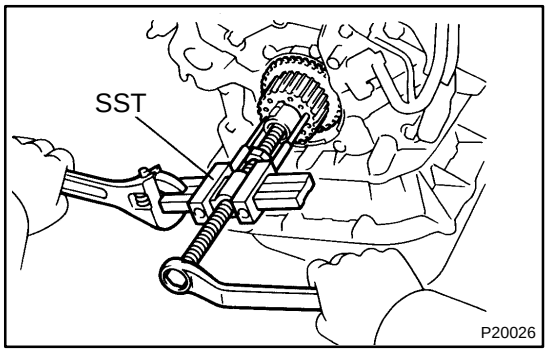

21. REMOVE CRANKSHAFT TIMING PULLEY

(a) Remove the bolt and timing belt plate.

(b) Using SST, remove the crankshaft timing pulley.

SST 09950-50012 (09951-05010, 09952-05010, 09953-05010, 09953-05020, 09954-05010)

NOTICE:

Do not scratch the sensor part of the crankshaft timing pulley.

VALVE CLEARANCE

INSPECTION

EM03V-03

HINT:

Inspect and adjust the valve clearance when the engine is cold.

1. REMOVE RH FENDER APRON SEAL

2. DRAIN ENGINE COOLANT

3. REMOVE V-BANK COVER

(a) Using a 5 mm hexagon wrench, remove the 3 cap nuts.

(b) Loosen the V-bank cover fastener counterclockwise.

(c) Remove the V-bank cover.

4. REMOVE AIR INTAKE CHAMBER ASSEMBLY (See page EM-31)

5. REMOVE IGNITION COILS

6. DISCONNECT UPPER RADIATOR HOSE FROM WATER OUTLET

7. REMOVE CYLINDER HEAD COVERS (See page EM-31)

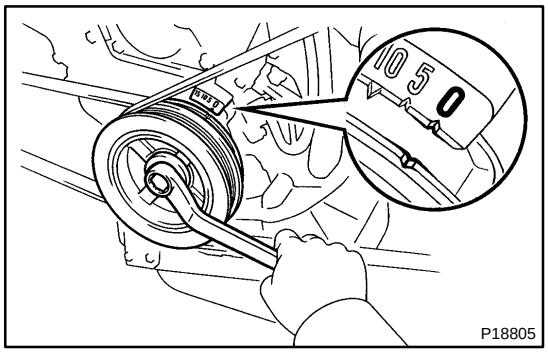

8. SET NO.1 CYLINDER TO TDC/COMPRESSION

(a) Turn the crankshaft pulley, and align its groove with the timing mark ”0” of the No.1 timing belt cover.

(b) Check that the valve lifters on the No.1 (IN and EX) are loose.

If not, turn the crankshaft 1 revolution (360˚) and align the mark as above.

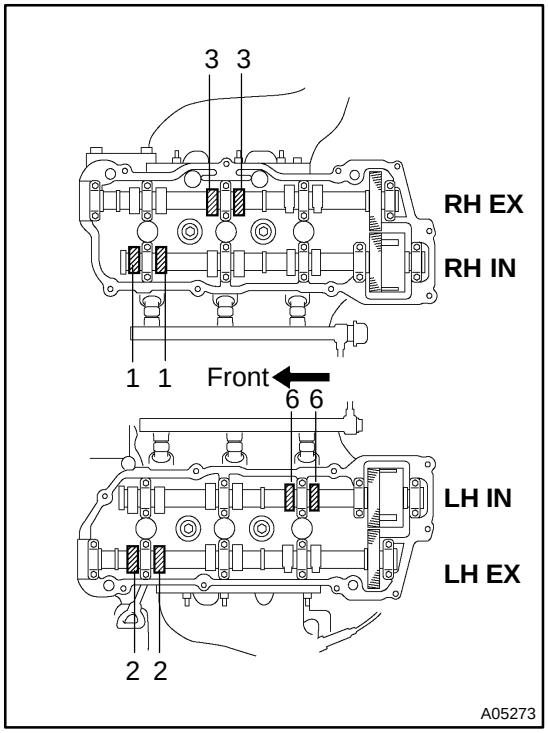

9. INSPECT VALVE CLEARANCE

(a) Check only those valves indicated in the illustration.

(1) Using a feeler gauge, measure the clearance between the valve lifter and camshaft.

(2) Record out of specification valve clearance measurements. They will be used later to determine the required replacement adjusting shim.

Valve clearance (Cold):

Intake	0.15 - 0.25 mm (0.006 - 0.010 in.)
Exhaust	0.25 - 0.35 mm (0.010 - 0.014 in.)

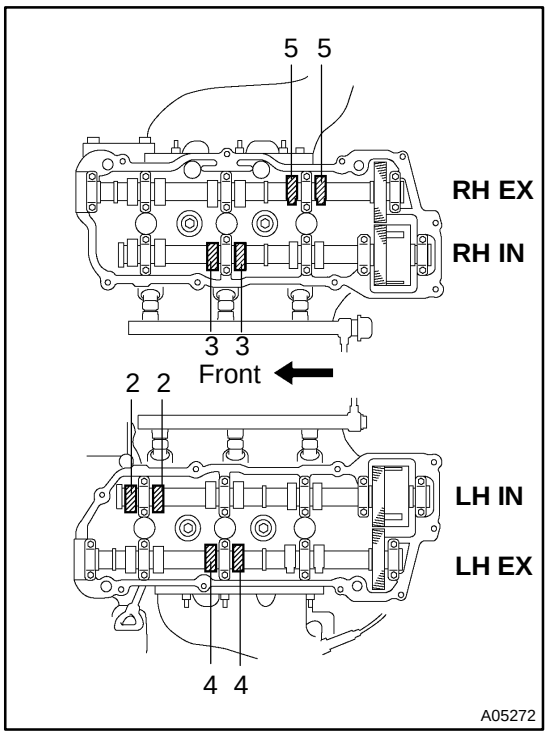

(b) Turn the crankshaft 2/3 of a revolution (240˚), and check only the valves indicated in the illustration. Measure the valve clearance. (See step (a))

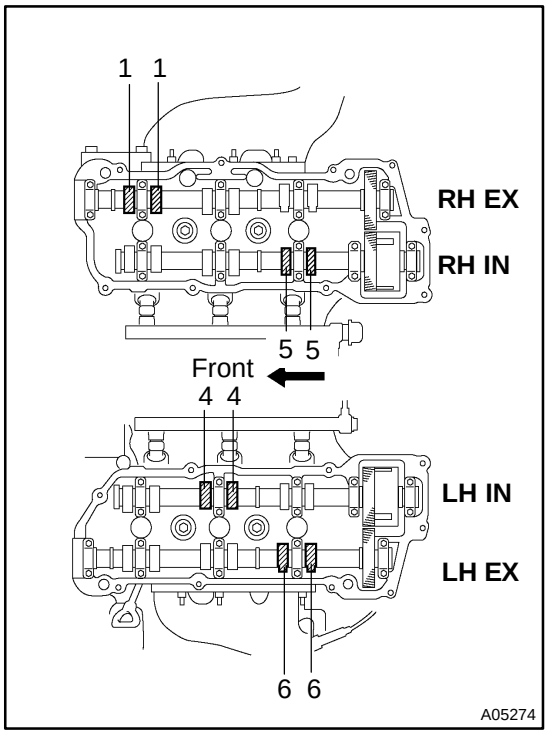

(c) Turn the crankshaft a further 2/3 of a revolution (240˚), and check only the valves indicated in the illustration. Measure the valve clearance. (See step (a))

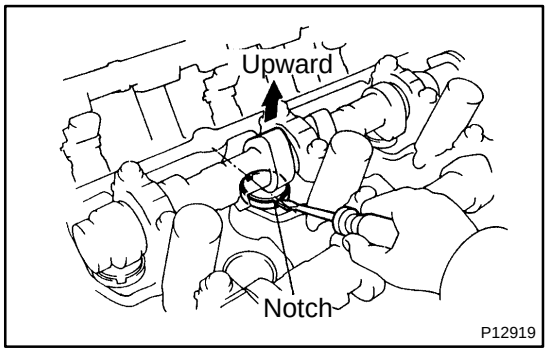

10. ADJUST VALVE CLEARANCE

(a) Remove the adjusting shim.

(1) Turn the camshaft so that the cam lobe for the valve to be adjusted faces up.

(2) Turn the valve lifter with a screwdriver so that the notches are perpendicular to the camshaft.

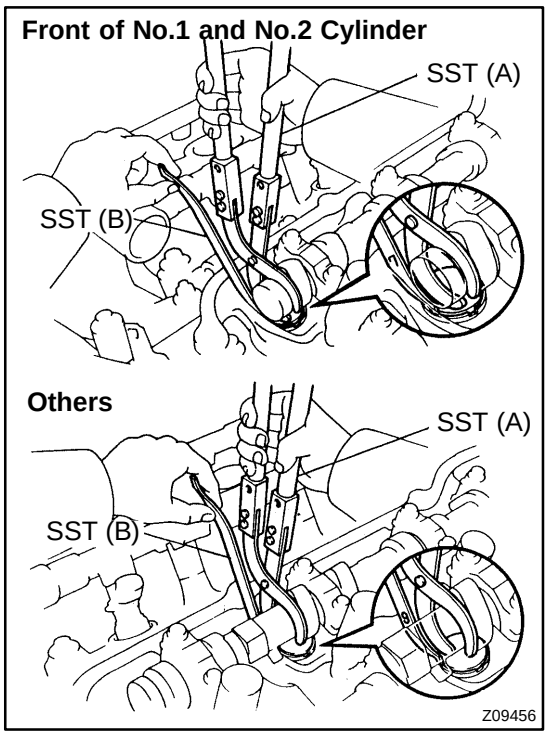

(3) Using SST (A), press down the valve lifter and place SST (B) between the camshaft and valve lifter. Remove SST (A).

SST 09248-55040 (09248-05410, 09248-05420)

HINT:

- Apply SST (B) at a slight angle on the side marked with "9" or "7", at the position shown in the illustration.
- When SST (B) is inserted too deeply, it will get pinched by the shim. To prevent it from being stuck, insert it gently from the intake side, at a slight angle.

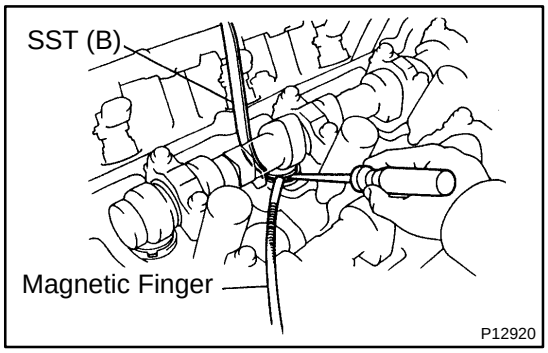

- Using a small screwdriver and magnetic finger, remove the adjusting shim.

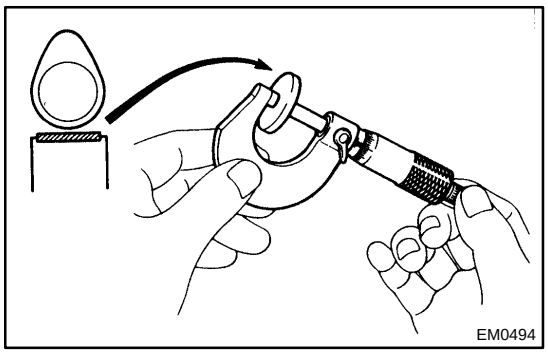

(b) Determine the replacement adjusting shim size according to these Formula or Charts:

(1) Using a micrometer, measure the thickness of the removed shim.

(2) Calculate the thickness of a new shim so the valve clearance comes within the specified value.

T ..... Thickness of used shim
A ..... Measured valve clearance
N ..... Thickness of new shim
Intake
N = T + (A - 0.20 mm (0.008 in.))
Exhaust
N = T + (A - 0.30 mm (0.012 in.))

(3) Select a new shim with a thickness as close as possible to the calculated values.

HINT:

Shims are available in 17 sizes in increments of 0.050 mm (0.0020 in.), from 2.500 mm (0.0984 in.) to 3.300 mm (0.1299 in.).

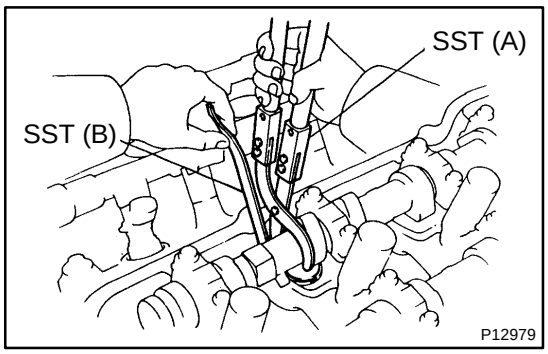

(c) Install a new adjusting shim.
(1) Place a new adjusting shim on the valve lifter, with imprinted numbers facing down.
(2) Press down the valve lifter with SST (A), and remove SST (B).

SST 09248-55040 (09248-05410, 09248-05420)

(d) Recheck the valve clearance.

11. REINSTALL CYLINDER HEAD COVERS (See page EM-59)

12. CONNECT UPPER RADIATOR HOSE TO WATER OUTLET

13. REINSTALL IGNITION COILS

14. REINSTALL AIR INTAKE CHAMBER ASSEMBLY (See page EM-59)

15. INSTALL V-BANK COVER

(a) Using a 5 mm hexagon wrench, install the V-bank cover with the 3 cap nuts.

(b) Press down the V-bank cover fastener.

16. REFILL WITH ENGINE COOLANT

17. START ENGINE AND CHECK FOR LEAKS

18. REINSTALL RH FENDER APRON SEAL

Adjusting Shim Selection Chart (Intake)

| Measured clearance mm (in.) \ Installed shim thickness mm (in.) | 2.500 (0.0984) | 2.520 (0.0992) | 2.540 (0.1000) | 2.550 (0.1004) | 2.560 (0.1008) | 2.580 (0.1016) | 2.600 (0.1024) | 2.620 (0.1031) | 2.640 (0.1039) | 2.650 (0.1043) | 2.660 (0.1047) | 2.670 (0.1051) | 2.680 (0.1055) | 2.690 (0.1059) | 2.700 (0.1063) | 2.710 (0.1067) | 2.720 (0.1071) | 2.730 (0.1075) | 2.740 (0.1079) | 2.750 (0.1083) | 2.760 (0.1087) | 2.770 (0.1091) | 2.780 (0.1094) | 2.790 (0.1098) | 2.800 (0.1102) | 2.810 (0.1106) | 2.820 (0.1110) | 2.830 (0.1114) | 2.840 (0.1118) | 2.850 (0.1122) | 2.860 (0.1126) | 2.870 (0.1130) | 2.880 (0.1134) | 2.890 (0.1138) | 2.900 (0.1142) | 2.910 (0.1146) | 2.920 (0.1150) | 2.930 (0.1154) | 2.940 (0.1157) | 2.950 (0.1161) | 2.960 (0.1165) | 2.970 (0.1169) | 2.980 (0.1173) | 2.990 (0.1177) | 3.000 (0.1181) | 3.010 (0.1185) | 3.020 (0.1189) | 3.030 (0.1193) | 3.040 (0.1197) | 3.050 (0.1201) | 3.060 (0.1205) | 3.080 (0.1213) | 3.100 (0.1220) | 3.120 (0.1228) | 3.140 (0.1236) | 3.150 (0.1240) | 3.160 (0.1244) | 3.180 (0.1252) | 3.200 (0.1260) | 3.220 (0.1268) | 3.240 (0.1276) | 3.250 (0.1280) | 3.260 (0.1283) | 3.280 (0.1291) | 3.300 (0.1299) |
|---|---|---

Adjusting Shim Selection Chart (Exhaust)

| Measured clearance mm (in.) \ Installed shim thickness mm (in.) | 2.500 (0.0984) | 2.520 (0.0992) | 2.540 (0.1000) | 2.550 (0.1004) | 2.560 (0.1008) | 2.580 (0.1016) | 2.600 (0.1024) | 2.620 (0.1031) | 2.640 (0.1039) | 2.650 (0.1043) | 2.660 (0.1047) | 2.670 (0.1051) | 2.680 (0.1055) | 2.690 (0.1059) | 2.700 (0.1063) | 2.710 (0.1067) | 2.720 (0.1071) | 2.730 (0.1075) | 2.740 (0.1079) | 2.750 (0.1083) | 2.760 (0.1087) | 2.770 (0.1091) | 2.780 (0.1094) | 2.790 (0.1098) | 2.800 (0.1102) | 2.810 (0.1106) | 2.820 (0.1110) | 2.830 (0.1114) | 2.840 (0.1118) | 2.850 (0.1122) | 2.860 (0.1126) | 2.870 (0.1130) | 2.880 (0.1134) | 2.890 (0.1138) | 2.900 (0.1142) | 2.910 (0.1146) | 2.920 (0.1150) | 2.930 (0.1154) | 2.940 (0.1157) | 2.950 (0.1161) | 2.960 (0.1165) | 2.970 (0.1169) | 2.980 (0.1173) | 2.990 (0.1177) | 3.000 (0.1181) | 3.010 (0.1185) | 3.020 (0.1189) | 3.030 (0.1193) | 3.040 (0.1197) | 3.050 (0.1201) | 3.060 (0.1205) | 3.070 (0.1213) | 3.080 (0.1213) | 3.100 (0.1220) | 3.120 (0.1228) | 3.140 (0.1236) | 3.150 (0.1240) | 3.160 (0.1244) | 3.180 (0.1252) | 3.200 (0.1260) | 3.220 (0.1268) | 3.240 (0.1276) | 3.250 (0.1280) | 3.260 (0.1283) | 3.280 (0.1291) | 3.300 (0.1299) |
|---|---|---

CAMSHAFT POSITION SENSOR

IG09Q-03

COMPONENTS

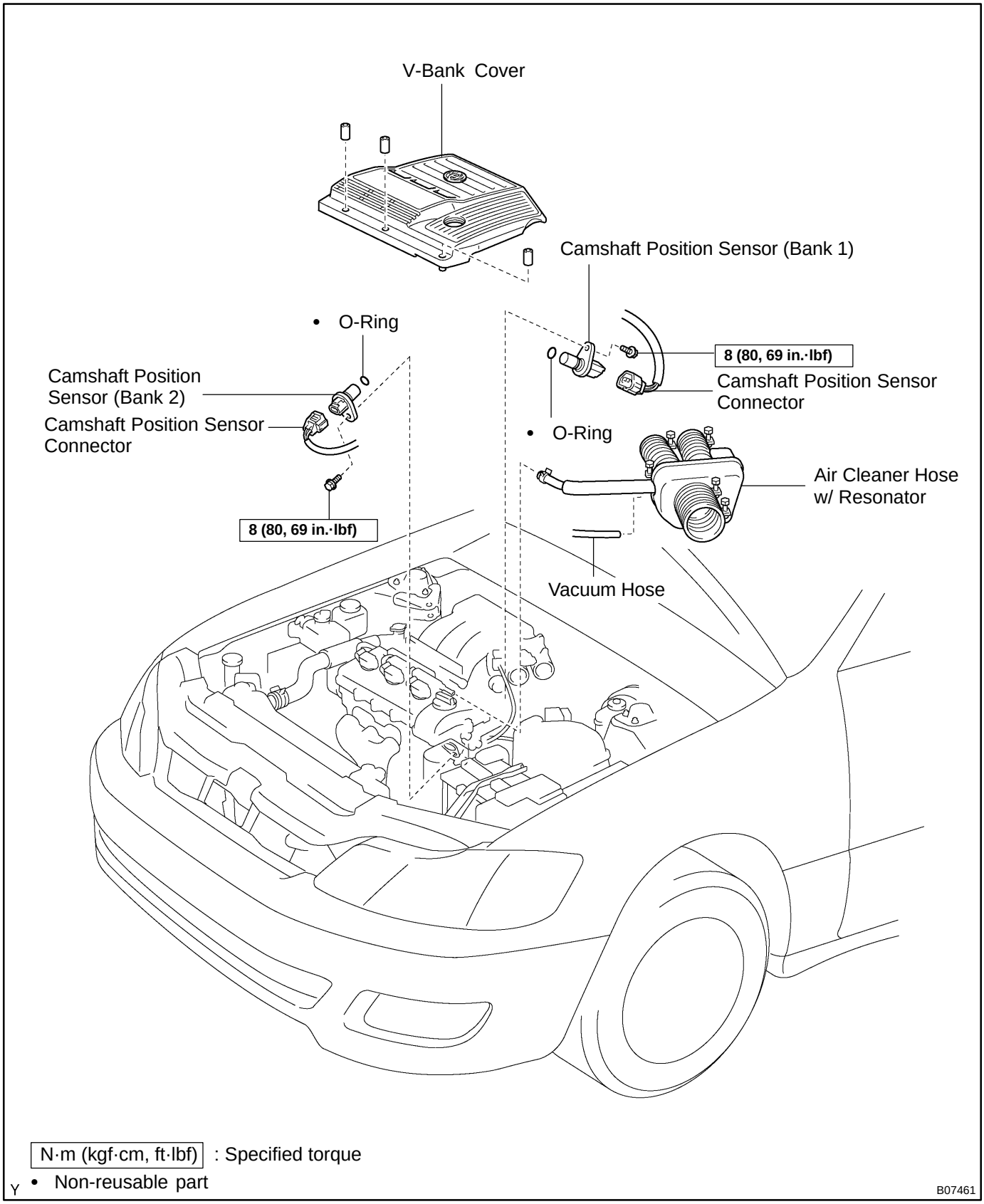

IG0DN-02

REPLACEMENT

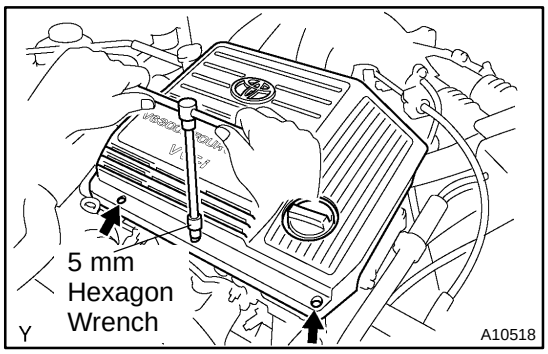

1. REMOVE V-BANK COVER

(a) Using a 5 mm hexagon wrench, remove the 3 cap nuts.

(b) Loosen the V-bank cover fastener counterclockwise.

(c) Remove the V-bank cover.

2. REMOVE AIR CLEANER HOSE WITH RESONATOR

3. REMOVE CAMSHAFT POSITION SENSORS

(a) Disconnect the 2 camshaft position sensor connectors.

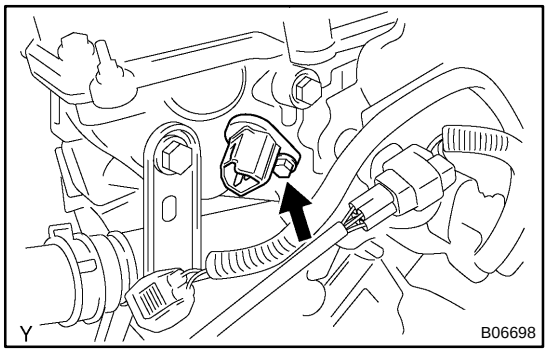

(b) Remove the bolt and camshaft position sensor. Remove the 2 camshaft position sensors.

(c) Remove the O-rings from the camshaft position sensors.

4. REINSTALL NEW CAMSHAFT POSITION SENSORS

(a) Install new O-rings to new camshaft position sensors.

(b) Install the camshaft position sensor with the bolt. Install the 2 camshaft position sensors.

Torque: 8 N·m (80 kgf·cm, 69 in.·lbf)

(c) Connect the 2 camshaft position sensor connectors.

5. REINSTALL AIR CLEANER HOSE WITH RESONATOR

6. REINSTALL V-BANK COVER

(a) Using 5 mm hexagon wrench, install the V-bank cover with the 3 cap nuts.

(b) Press down the V-bank cover fastener.

CRANKSHAFT POSITION SENSOR

IG067-03

COMPONENTS

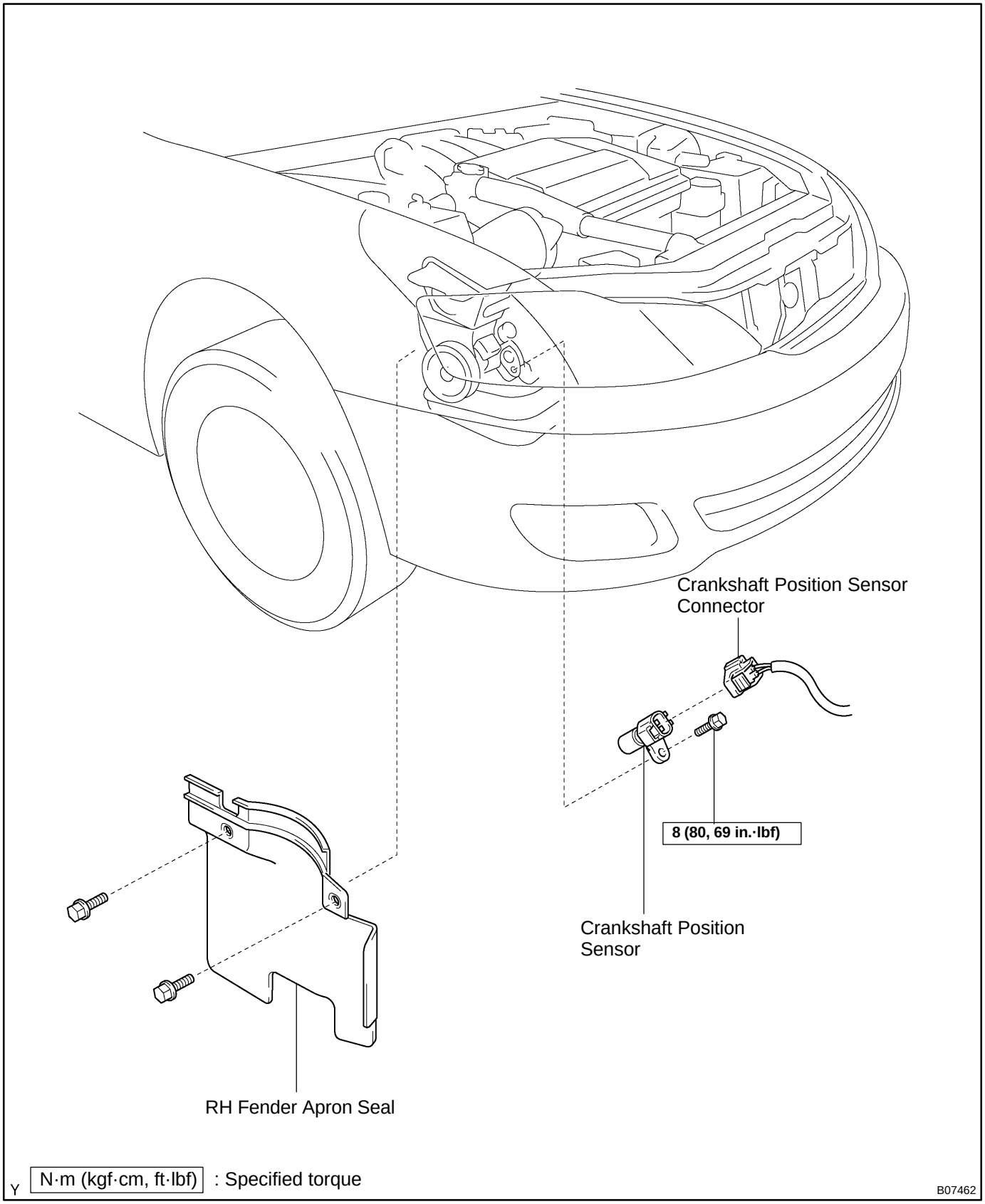

IG068-02

REPLACEMENT

1. REMOVE RH FENDER APRON SEAL

2. REMOVE CRANKSHAFT POSITION SENSOR

(a) Disconnect the crankshaft position sensor connector.

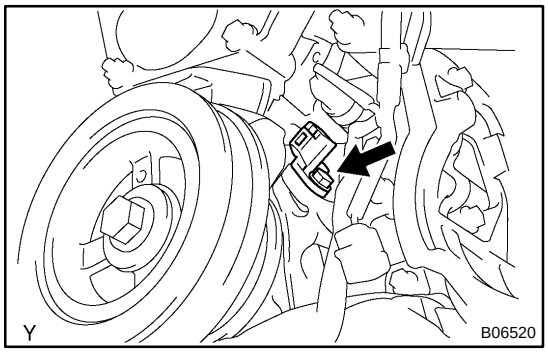

(b) Remove the bolt and crankshaft position sensor.

3. REINSTALL NEW CRANKSHAFT POSITION SENSOR

(a) Install a new crankshaft position sensor with the bolt.
Torque: 8 N·m (80 kgf·cm, 69 in.·lbf)

(b) Connect the crankshaft position sensor connector.

4. REINSTALL RH FENDER APRON SEAL

IGNITION COIL

COMPONENTS

IG09O-03

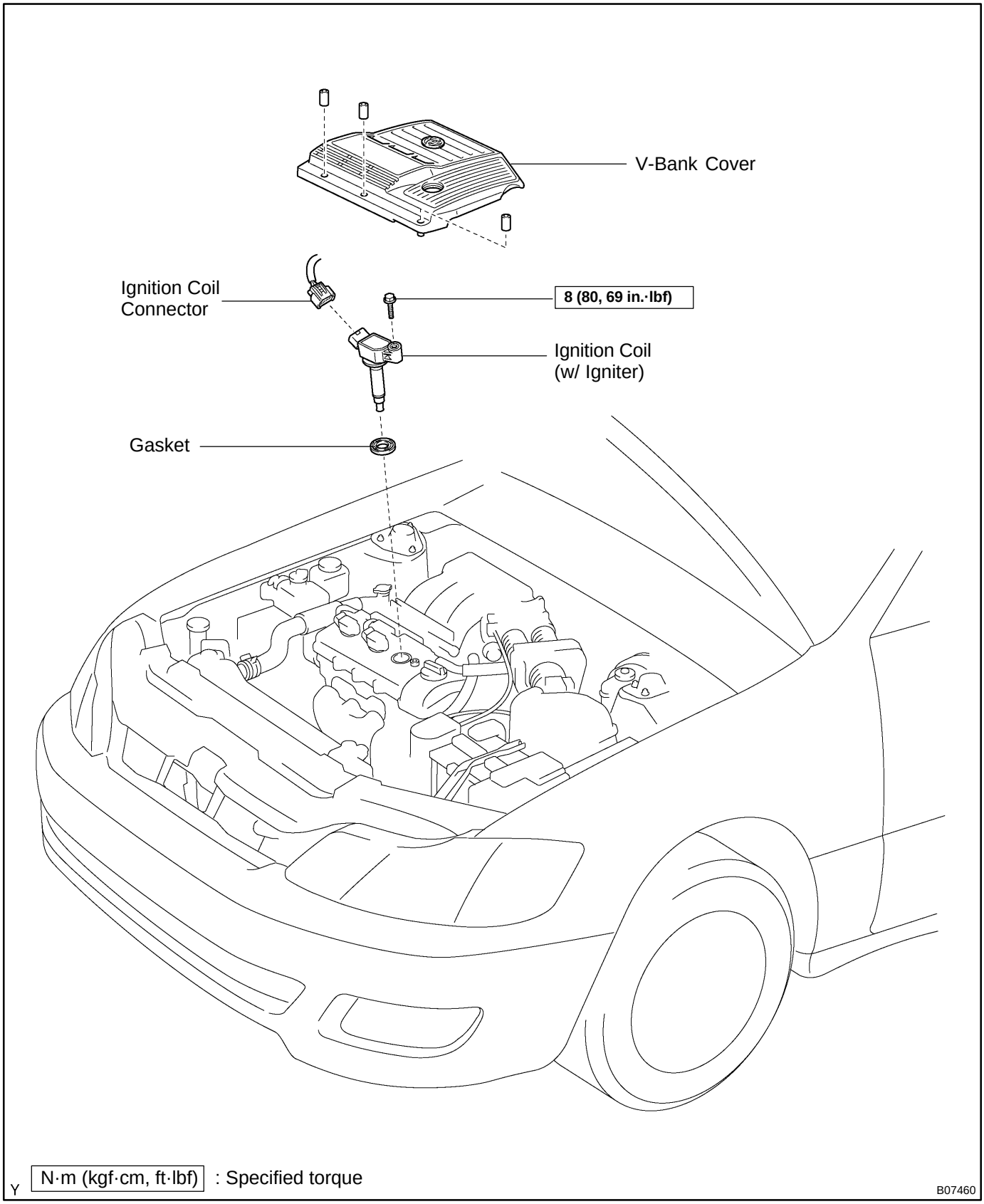

IG0DM-02

REPLACEMENT

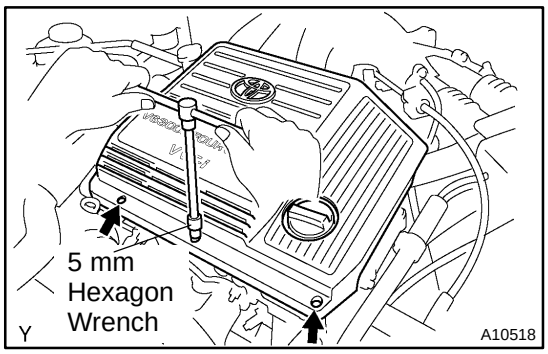

1. REMOVE V-BANK COVER

(a) Using a 5 mm hexagon wrench, remove the 3 cap nuts.

(b) Loosen the V-bank cover fastener counterclockwise.

(c) Remove the V-bank cover.

2. REMOVE IGNITION COILS

(a) Disconnect the 6 ignition coil connectors.

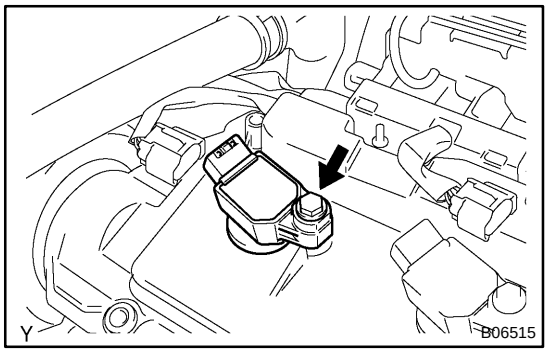

(b) Remove the bolt, and pull out the ignition coil. Remove the 6 ignition coils.

3. REINSTALL NEW IGNITION COILS

(a) Connect a new ignition coil to the spark plug, and attach the ignition coil to the cylinder head cover, and install the bolt. Install the 6 ignition coils.

Torque: 8 N·m (80 kgf·cm, 69 in.·lbf)

(b) Connect the 6 ignition coil connectors.

4. REINSTALL V-BANK COVER

(a) Using 5 mm hexagon wrench, install the V-bank cover with the 3 cap nuts.

(b) Press down the V-bank cover fastener.

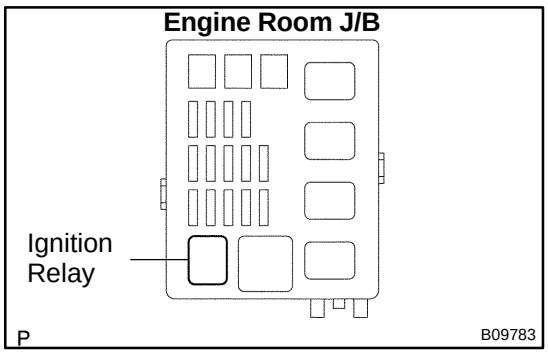

IGNITION RELAY (No.2)

SF0DX-04

INSPECTION

1. REMOVE IGNITION RELAY (Marking: IG2)

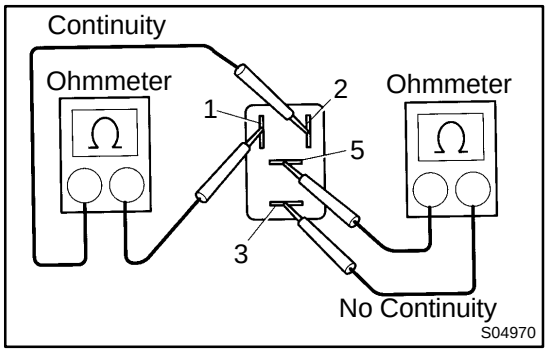

2. INSPECT IGNITION RELAY

(a) Inspect the relay continuity.

(1) Using an ohmmeter, check that there is continuity between terminals 1 and 2.

If there is no continuity, replace the relay.

(2) Check that there is no continuity between terminals 3 and 5.

If there is continuity, replace the relay.

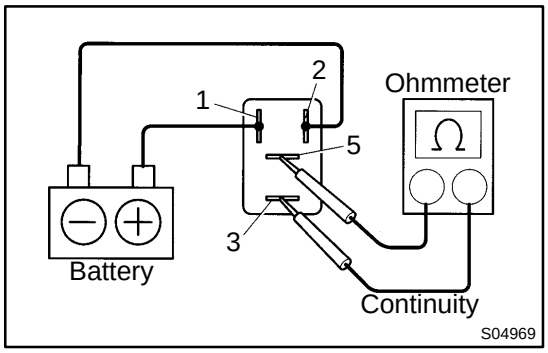

(b) Inspect the relay operation.

(1) Apply battery positive voltage across terminals 1 and 2.

(2) Using an ohmmeter, check that there is continuity between terminals 3 and 5.

If there is no continuity, replace the relay.

3. REINSTALL IGNITION RELAY

IGNITION SYSTEM

IG0DL-02

ON-VEHICLE INSPECTION

NOTICE:

"Cold" and "Hot" in these sentences express the temperature of the coils themselves. "Cold" is from -10˚C (14˚F) to 50˚C (122˚F) and "Hot" is from 50˚C (122˚F) to 100˚C (212˚F).

1. INSPECT SPARK TEST

Check that the spark occurs.

(1) Remove the ignition coils (with igniters) (See page IG-5).
(2) Remove the spark plugs.
(3) Install the spark plug to the ignition coil, and connect the ignition coil connector.
(4) Ground the spark plug.
(5) See if spark occurs while engine is being cranked.

NOTICE:

To prevent gasoline from being injected from injectors during this test, crank the engine for no more than 5 - 10 seconds at time.

If the spark does not occur, do the test as follows:

SPARK TEST

NO

CHECK CONNECTIONS OF IGNITION COIL (WITH IGNITER) CONNECTORS → BAD → Connect securely.

OK

CHANGE IT TO NORMAL IGNITION COIL (WITH IGNITER) AND PERFORM SPARK TEST AGAIN → OK → Replace ignition coil (with igniter).

NO

CHECK POWER SUPPLY TO IGNITION COILS (WITH IGNITER)
1. Turn ignition switch to ON.
2. Check that there is battery positive voltage at ignition coil positive (+) terminal.

→ BAD → Check wiring between ignition switch to ignition coils (with igniters).

OK

CHECK RESISTANCE OF SENSORS (See steps 4 and 5)

Resistance:	**Cold**	**Hot**
Camshaft position sensor	**835 - 1,400 Ω**	**1,060 - 1,645 Ω**
Crankshaft position sensor	**1,630 - 2,740 Ω**	**2,065 - 3,225 Ω**

→ BAD → Replace camshaft position sensor. Replace crankshaft position sensor.

OK

CHECK IGT SIGNAL FROM ECM (See page DI-1 17) → BAD → Check wiring between ECM and ignition coils (with igniters), and then try another ECM.

OK

TRY ANOTHER IGNITION COIL (WITH IGNITER)

2. INSPECT SPARK PLUGS

NOTICE:

- **Never use a wire brush for cleaning.**
- **Never attempt to adjust the electrode gap on a used spark plug.**
- **Spark plugs should be replaced every 193,000 km (120,000 miles).**

(a) Remove the 6 ignition coils (with igniters) (See page IG-5).

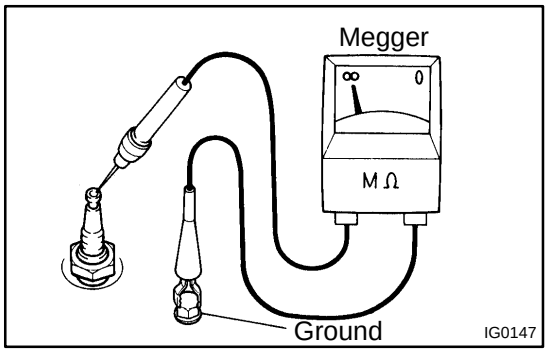

(b) Inspect the electrode.

- Using a megger (insulation resistance meter), measure the insulation resistance.

Standard correct insulation resistance:
10 MΩ or more

If the resistance is less than specified, proceed to step (d).

HINT:

If a megger is not available, these simple method of inspection provides fairly accurate results.

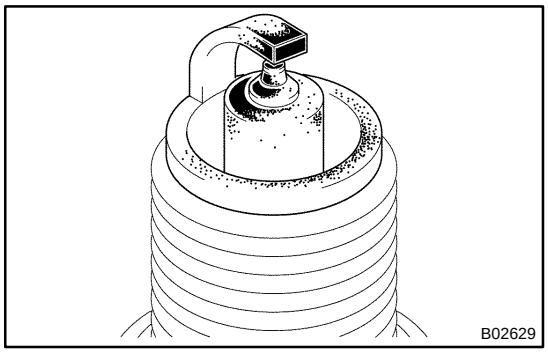

- Simple Method:
  - Quickly race the engine to 4,000 rpm 5 times.
  - Remove the spark plug (See step (c)).
  - Visually check the spark plug.
    If the electrode is dry ... OK
    If the electrode is wet ... Proceed to step (d)
  - Reinstall the spark plug (See step (g)).

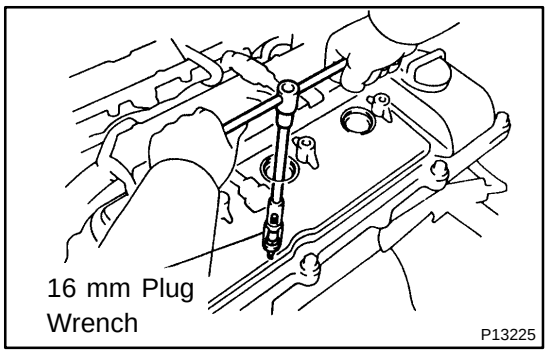

(c) Using a 16 mm plug wrench, remove the 6 spark plugs.

(d) Visually check the spark plug for thread damage and insulator damage.

If abnormal, replace the spark plug.

Recommended spark plug:

DENSO made	SK20R11
NGK made	IFR6A11

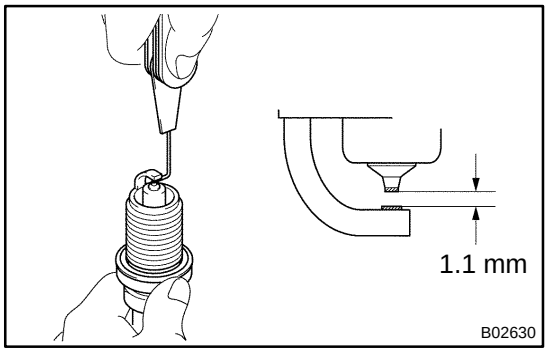

(e) Inspect the electrode gaps.

Maximum electrode gap for used spark plug:
1.3 mm (0.051 in.)

If the gap is greater than maximum, replace the spark plug.

Correct electrode gap for new spark plug:
1.1 mm (0.043 in.)

NOTICE:

If adjusting the gap of a new spark plug, bend only the base of the ground electrode. Do not touch the tip. Never attempt to adjust the gap on the used plug.

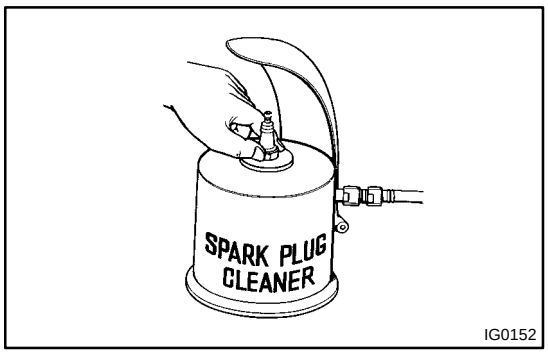

(f) Clean the spark plugs.

If the electrode has traces of wet carbon, allow it to dry and then clean with a spark plug cleaner.

Air pressure: Below 588 kPa (6 kgf/cm^2, 85 psi)
Duration: 20 seconds or less

HINT:

If there are traces of oil, remove it with gasoline before using the spark plug cleaner.

(g) Using a 16 mm plug wrench, install the 6 spark plugs.
Torque: 18 N·m (180 kgf·cm, 13 ft·lbf)

(h) Reinstall the 6 ignition coil (See page IG-5).

3. INSPECT IGNITION COILS (WITH IGNITERS)
(See step 1.)

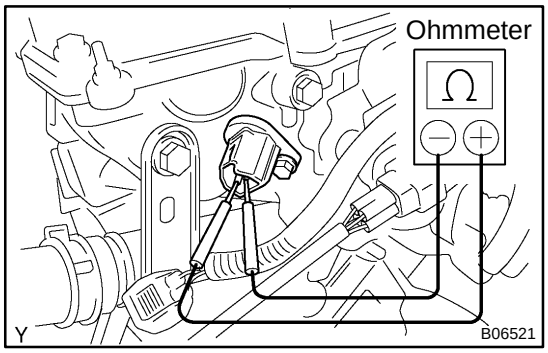

4. INSPECT CAMSHAFT POSITION SENSORS

(a) Remove the V-bank cover.

(b) Remove the air cleaner hose w/ resonator.

(c) Disconnect the sensor connectors.

(d) Using an ohmmeter, measure the resistance between terminals.

Resistance:

Cold	835 - 1,400 Ω
Hot	1,060 - 1,645 Ω

If the resistance is not as specified, replace the sensor.

(e) Reconnect the sensor connectors.

(f) Reinstall the air cleaner hose w/ resonator.

(g) Reinstall the V-bank cover.

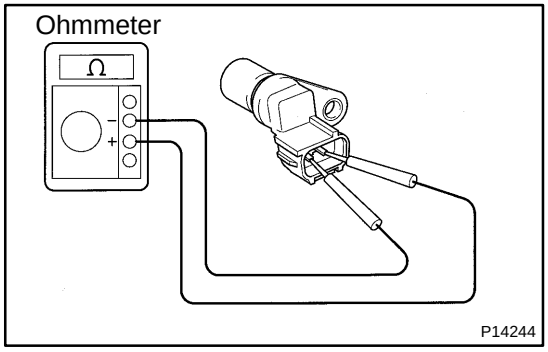

5. INSPECT CRANKSHAFT POSITION SENSOR

(a) Remove the sensor (See page IG-9).

(b) Using an ohmmeter, measure the resistance between the terminals.

Resistance:

Cold	1,630 - 2,740 Ω
Hot	2,065 - 3,225 Ω

If the resistance is not as specified, replace the sensor.

(c) Reinstall the sensor (See page IG-9).

FOR ALL OF VEHICLES

IN0ED-02

PRECAUTION

1. FOR VEHICLES EQUIPPED WITH SRS AIRBAG AND SEAT BELT PRETENSIONER

(a) The AVALON is equipped with an SRS (Supplemental Restraint System), such as the driver airbag, front passenger airbag assembly, side airbag assembly and seat belt pretensioner.

Failure to carry out service operations in the correct sequence could cause the supplemental restraint system to unexpectedly deploy during servicing, possibly leading to a serious accident.

Further, if a mistake is made in servicing the supplemental restraint system, it is possible the SRS may fail to operate when required. Before servicing (including removal or installation of parts, inspection or replacement), be sure to read the following items carefully, then follow the correct procedure described in this manual.

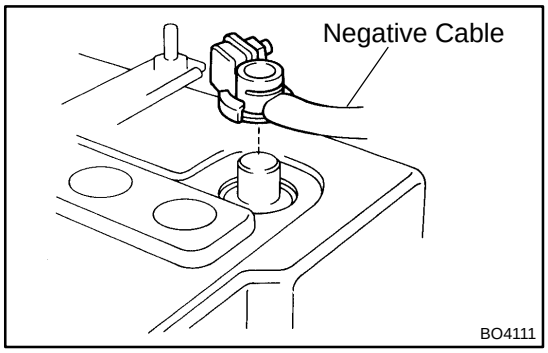

(b) GENERAL NOTICE

(1) Malfunction symptoms of the supplemental restraint system are difficult to confirm, so the diagnostic trouble codes become the most important source of information when troubleshooting. When troubleshooting the supplemental restraint system, always inspect the diagnostic trouble codes before disconnecting the battery (See page DI-349).

(2) Work must be started after 90 seconds from the time the ignition switch is turned to the ”LOCK” position and the negative (-) terminal cable is disconnected from the battery.

(The supplemental restraint system is equipped with a back-up power source so that if work is started within 90 seconds of disconnecting the negative (-) terminal cable from the battery, the SRS may deploy.)

When the negative (-) terminal cable is disconnected from the battery, memory of the clock and audio systems will be cancelled. So before starting work, make a record of the contents memorized by the each memory system. Then when work is finished, reset the clock and audio systems as before.

To avoid erasing the memory of each memory system, never use a back-up power supply from another battery.

(3) Even in cases of a minor collision where the SRS does not deploy, the steering wheel pad, front passenger airbag assembly, side airbag assembly and seat belt pretensioner should be inspected (See page RS-15, RS-30, RS-44, RS-57 and BO-130).

(4) Never use SRS parts from another vehicle. When replacing parts, replace them with new parts.

(5) Before repairs, remove the airbag sensor if shocks are likely to be applied to the sensor during repairs.

(6) Never disassemble and repair the airbag sensor assembly, steering wheel pad, front passenger airbag assembly, side airbag assembly or seat belt pretensioner.

(7) If the airbag sensor assembly, steering wheel pad, front passenger airbag assembly, side airbag assembly or seat belt pretensioner has been dropped, or if there are cracks, dents or other defects in the case, bracket or connector, replace them with new ones.

(8) Do not directly expose the airbag sensor assembly, steering wheel pad, front passenger airbag assembly, side airbag assembly or seat belt pretensioner to hot air or flames.

(9) Use a volt/ohmmeter with high impedance (10 kΩ/V minimum) for troubleshooting of the electrical circuit.

(10) Information labels are attached to the periphery of the SRS components. Follow the instructions on the notices.

(11) After work on the supplemental restraint system is completed, check the SRS warning light (See page DI-349).

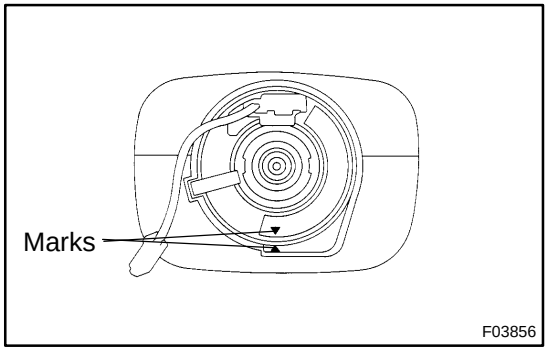

(c) SPIRAL CABLE (in Combination Switch)
The steering wheel must be fitted correctly to the steering column with the spiral cable at the neutral position, otherwise cable disconnection and other troubles may result. Refer to SR-22 of this manual concerning correct steering wheel installation.

(d) STEERING WHEEL PAD (with Airbag)

(1) When removing the steering wheel pad or handling a new steering wheel pad, it should be placed with the pad top surface facing up.
Storing the pad with its metallic surface facing upward may lead to a serious accident if the airbag deploys for some reason. In addition do not store a steering wheel pad on top of another one.

(2) Never measure the resistance of the airbag squib. (This may cause the airbag to deploy, which is very dangerous.)

(3) Grease should not be applied to the steering wheel pad and the pad should not be cleaned with detergents of any kind.

(4) Store the steering wheel pad where the ambient temperature remains below 93˚C (200˚F), without high humidity and away from electrical noise.

(5) When using electric welding, first disconnect the airbag connector (yellow color and 2 pins) under the steering column near the combination switch connector before starting work.

(6) When disposing of a vehicle or the steering wheel pad alone, the airbag should be deployed using an SST before disposal (See page RS-17).
Carry out the operation in a safe place away from electrical noise.

Example:

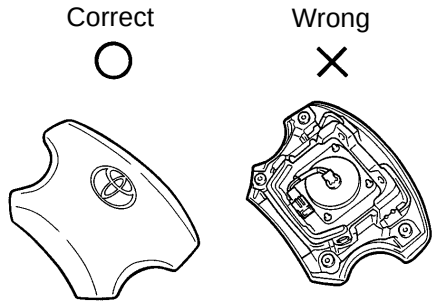

B09710

Example:

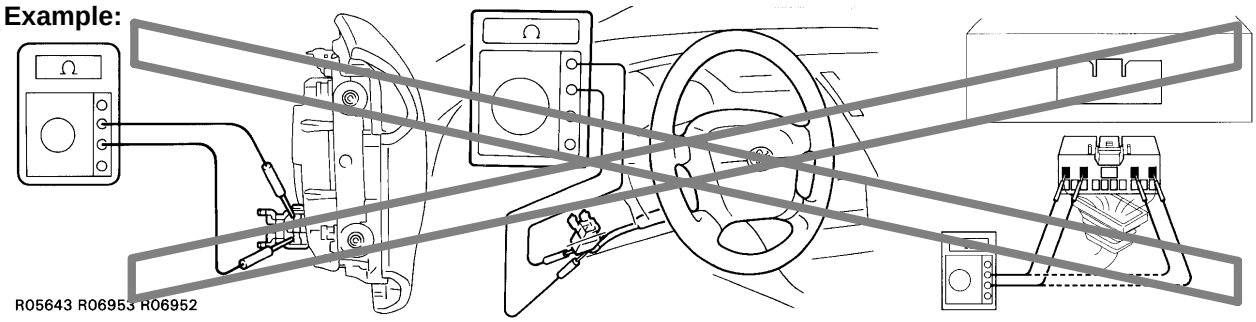

R05643 R06953 R06952

Z13950

(e) FRONT PASSENGER AIRBAG ASSEMBLY

(1) Always store a removed or new front passenger airbag assembly with the airbag deployment direction facing up.
Storing the airbag assembly with the airbag deployment direction facing down could cause a serious accident if the airbag inflates.

(2) Never measure the resistance of the airbag squib. (This may cause the airbag to deploy, which is very dangerous.)

(3) Grease should not be applied to the front passenger airbag assembly and the airbag door should not be cleaned with detergents of any kind.

(4) Store the airbag assembly where the ambient temperature remains below 93˚C (200˚F), without high humidity and away from electrical noise.

(5) When using electric welding, first disconnect the airbag connector (yellow color and 2 pins) installed on the assembly before starting work.

(6) When disposing of a vehicle or the airbag assembly alone, the airbag should be deployed using an SST before disposal (See page RS-32).
Perform the operation in a safe place away from electrical noise.

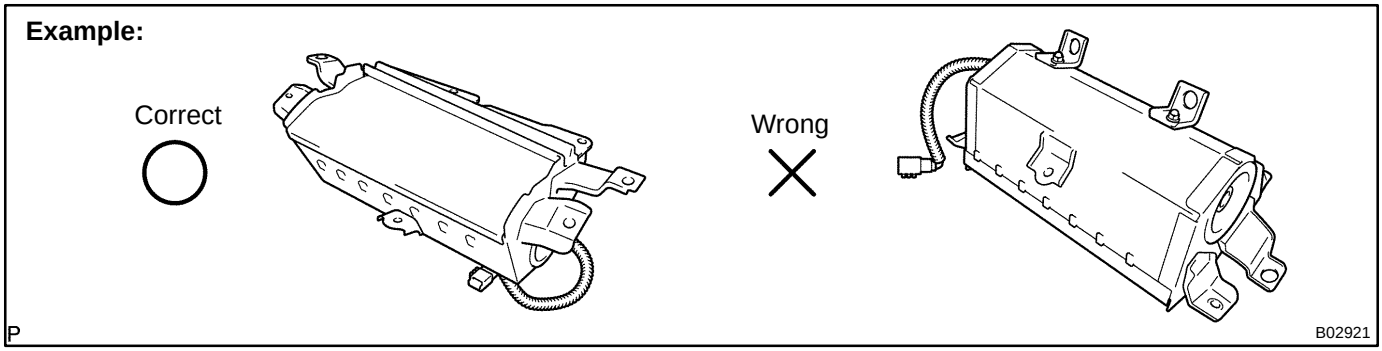

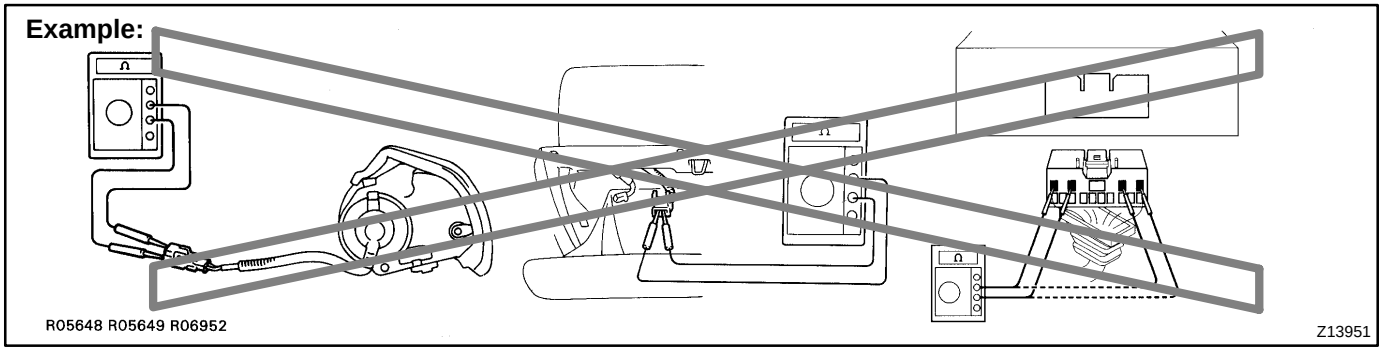

(f) SIDE AIRBAG ASSEMBLY

(1) Always store a removed or new side airbag assembly with the airbag deployment direction facing up. Storing the airbag assembly with the airbag deployment direction facing down could cause a serious accident if the airbag deploys.

(2) Never measure the resistance of the airbag squib. (This may cause the airbag to deploy, which is very dangerous.)

(3) Grease should not be applied to the side airbag assembly and the surface should not be cleaned with detergents of any kind.

(4) Store the airbag assembly where the ambient temperature remains below 93˚C (200˚F), without high humidity and away from electrical noise.

(5) When using electric welding, first disconnect the airbag connector (yellow color and 2 pins) under the seat before starting work.

(6) When disposing of a vehicle or the side airbag assembly alone, the airbag should be deployed using an SST before disposal (See page RS-45). Perform the operation in a safe place away from electrical noise.

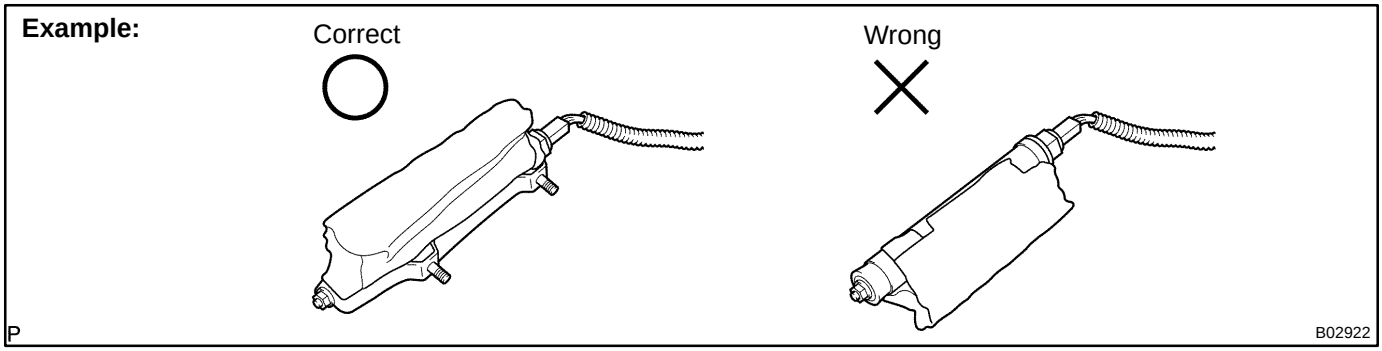

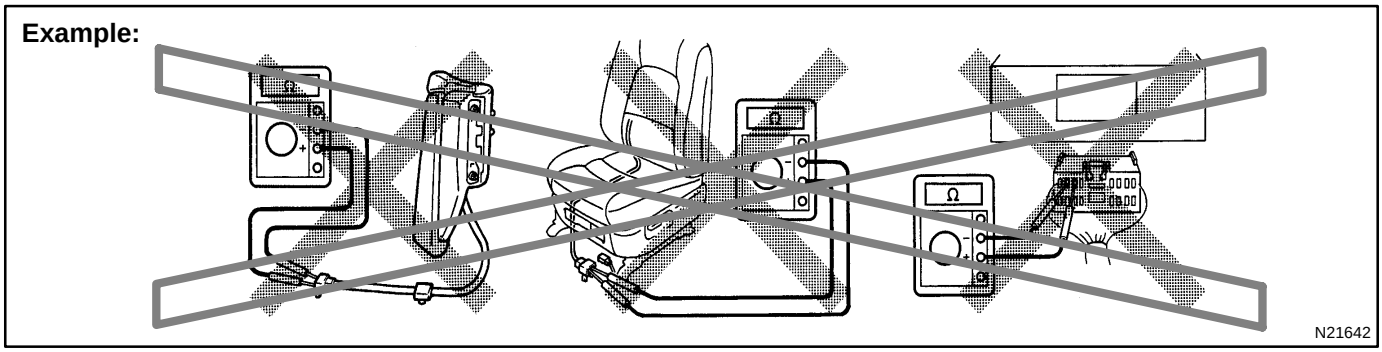

(g) SEAT BELT PRETENSIONER

(1) Never measure the resistance of the seat belt pretensioner. (This may cause the seat belt pretensioner to activate, which is very dangerous.)

(2) Never disassemble the seat belt pretensioner.

(3) Never install the seat belt pretensioner in another vehicle.

(4) Store the seat belt pretensioner where the ambient temperature remains below 80°C (176°F) and away from electrical noise without high humidity.

(5) When using electric welding, first disconnect the connector (yellow color and 2 pins) before starting work.

(6) When disposing of a vehicle or the seat belt pretensioner alone, the seat belt pretensioner should be activated before disposal (See page BO-131). Perform the operation in a safe place away from electrical noise.

(7) The seat belt pretensioner is hot after activation, so let it cool down sufficiently before the disposal. However never apply water to the seat belt pretensioner.

Example:

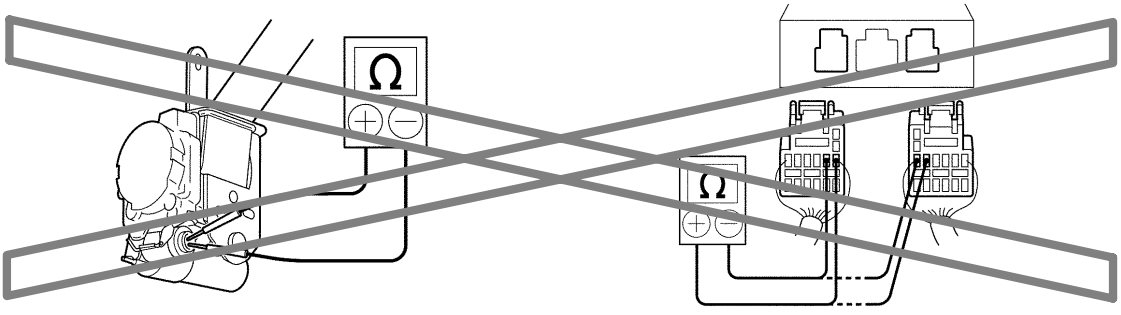

(h) AIRBAG SENSOR ASSEMBLY

(1) Never reuse the airbag sensor assembly involved in a collision when the SRS has deployed.

(2) The connectors to the airbag sensor assembly should be connected or disconnected with the sensor mounted on the floor. If the connectors are connected or disconnected while the airbag sensor assembly is not mounted to the floor, it could cause undesired ignition of the supplemental restraint system.

(3) Work must be started after 90 seconds from the time the ignition switch is turned to the ”LOCK” position and the negative (-) terminal cable is disconnected from the battery, even if only loosing the set bolts of the airbag sensor assembly.

(i) WIRE HARNESS AND CONNECTOR

The SRS wire harness is integrated with the instrument panel wire harness assembly. All the connectors in the system are a standard yellow color. If the SRS wire harness becomes disconnected or the connector becomes broken due to an accident, etc., repair or replace it as shown on page RS-82 .

2. FOR VEHICLES EQUIPPED WITH A CATALYTIC CONVERTER

CAUTION:

If large amount of unburned gasoline flows into the converter, it may overheat and create a fire hazard. To prevent this, observe the following precautions and explain them to your customer.

(a) Use only unleaded gasoline.

(b) Avoid prolonged idling.
Avoid running the engine at idle speed for more than 20 minutes.

(c) Avoid spark jump test.
   (1) Perform spark jump test only when absolutely necessary. Perform this test as rapidly as possible.
   (2) While testing, never race the engine.

(d) Avoid prolonged engine compression measurement.
Engine compression tests must be done as rapidly as possible.

(e) Do not run engine when fuel tank is nearly empty.
This may cause the engine to misfire and create an extra load on the converter.

(f) Avoid coasting with ignition turned off.

(g) Do not dispose of used catalyst along with parts contaminated with gasoline or oil.

3. IF VEHICLE IS EQUIPPED WITH MOBILE COMMUNICATION SYSTEM

For vehicles with mobile communication systems such as two-way radios and cellular telephones, observe the following precautions.

(1) Install the antenna as far as possible away from the ECU and sensors of the vehicle's electronic system.

(2) Install the antenna feeder at least 20 cm (7.87 in.) away from the ECU and sensors of the vehicle's electronic systems. For details about ECU and sensors locations, refer to the section on the applicable component.

(3) Avoid winding the antenna feeder together with other wiring as much as possible, and also avoid running the antenna feeder parallel with other wire harnesses.

(4) Check that the antenna and feeder are correctly adjusted.

(5) Do not install powerful mobile communications system.

4. FOR USING OBD II SCAN TOOL OR TOYOTA HAND-HELD TESTER

CAUTION:

Observe the following items for safety reasons:

- ★ **Before using the OBD II scan tool or TOYOTA hand-held tester, the OBD II scan tool's instruction book or TOYOTA hand-held tester's operator manual should be read thoroughly.**
- ★ **Be sure to route all cables securely when driving with the OBD II scan tool or TOYOTA hand-held tester connected to the vehicle. (i.e. Keep cables away from feet, pedals, steering wheel and shift lever.)**
- ★ **Two persons are required when test driving with the OBD II scan tool or TOYOTA hand-held tester, one person to drive the vehicle and the other person to operate the OBD II scan tool or TOYOTA hand-held tester.**

5. FOR VEHICLES EQUIPPED WITH TRACTION CONTROL (TRAC) & VEHICLE SKID CONTROL (VSC) SYSTEM

NOTICE:

- ★ **When replacing the steering angle sensor or ECU, or when adjusting the front wheel alignment or steering wheel center point in accordance with the removing and installing or replacing the suspension, axle, or steering parts, make sure to perform the steering angle sensor zero point calibration (See page DI-252).**
- ★ **Do not remove or install the VSC related parts unless necessary. Otherwise, there is a possibility that the setting of the VSC to be affected.**
- ★ **When working on the VSC related operation, make sure to check that the preparations before and after work are completed according to the following instruction.**
- ★ **When using a drum tester such as a speedometer tester or chassis dynamometer, etc., or jacking up the front wheels and driving the wheels, always push in the TRAC & VSC cut ("VSC OFF") switch and turn the TRAC & VSC system OFF.**

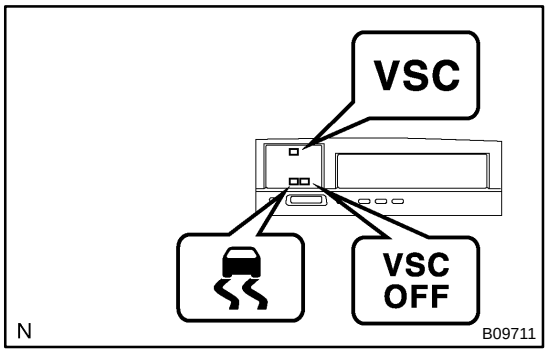

(a) Press the VSC OFF switch.

(b) Check that the VSC OFF indicator light comes ON.

HINT:

The VSC OFF indicator light should be always OFF when the engine is restarted.

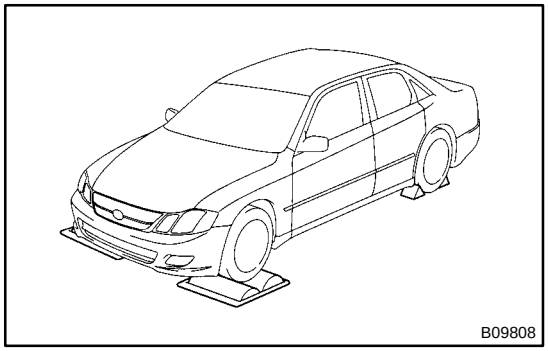

(c) Begin measurements.

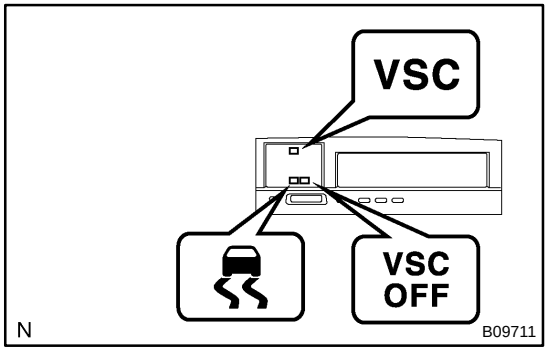

(d) Press the VSC OFF switch again to change the TRAC & VSC system to operational condition and check that the VSC OFF indicator light goes off.

HINT:

- ★ The SLIP indicator light blinks when the TRAC system is operational.
- ★ The SLIP indicator light blinks and the VSC buzzer sounds when the VSC system is operational.

HOW TO TROUBLESHOOT ECU CONTROLLED SYSTEMS

IN05Y-17

GENERAL INFORMATION

A large number of ECU controlled systems are used in the AVALON. In general, the ECU controlled system is considered to be a very intricate system requiring a high level of technical knowledge and expert skill to troubleshoot. However, the fact is that if you proceed to inspect the circuits one by one, troubleshooting of these systems is not complex. If you have adequate understanding of the system and a basic knowledge of electricity, accurate diagnosis and necessary repair can be performed to locate and fix the problem. This manual is designed through emphasis of the above standpoint to help service technicians perform accurate and effective troubleshooting, and is compiled for the following major ECU controlled systems:
The troubleshooting procedure and how to make use of it are described on the following pages.

System	Page
1. Engine	DI-1
2. Automatic Transaxle	DI-158
3. Anti-Lock Brake System With Electronic Brake Force Distribution (EBD)	DI-210
4. ABS With EBD & BA & TRAC & VSC System	DI-250
5. Supplemental Restraint System	DI-347
6. Power Seat Control System (w/ Driving position memory)	DI-488
7. Theft Deterrent System	DI-517
8. Cruise Control System	DI-549
9. Engine Immobilizer System	DI-597
10.Body Control System	DI-615
11.Driver Door Control System	DI-676
12.Passenger Door Control System	DI-700
13.Multiplex Communication System	DI-718
14.Air Conditioning System	DI-752

FOR USING OBD II SCAN TOOL OR TOYOTA HAND-HELD TESTER

★ Before using the scan tool or tester, the scan tool's instruction book or tester's operator manual should be read thoroughly.

★ If the scan tool or tester cannot communicate with ECU controlled systems when you have connected the cable of the scan tool or tester to DLC3, turned the ignition switch ON and operated the scan tool, there is a problem on the vehicle side or tool side.

(1) If communication is normal when the tool is connected to another vehicle, inspect the diagnosis data link line (Bus⊕line) or ECU power circuit of the vehicle.

(2) If communication is still not possible when the tool is connected to another vehicle, the problem is probably in the tool itself, so perform the Self Test procedures outline in the Tester Operator's Manual.

IN05W-19

HOW TO PROCEED WITH TROUBLESHOOTING

Carry out troubleshooting in accordance with the procedure on the following page. Here, only the basic procedure is shown. Details are provided in Diagnostics section, showing the most effective methods for each circuit. Confirm the troubleshooting procedures first for the relevant circuit before beginning troubleshooting of that circuit.

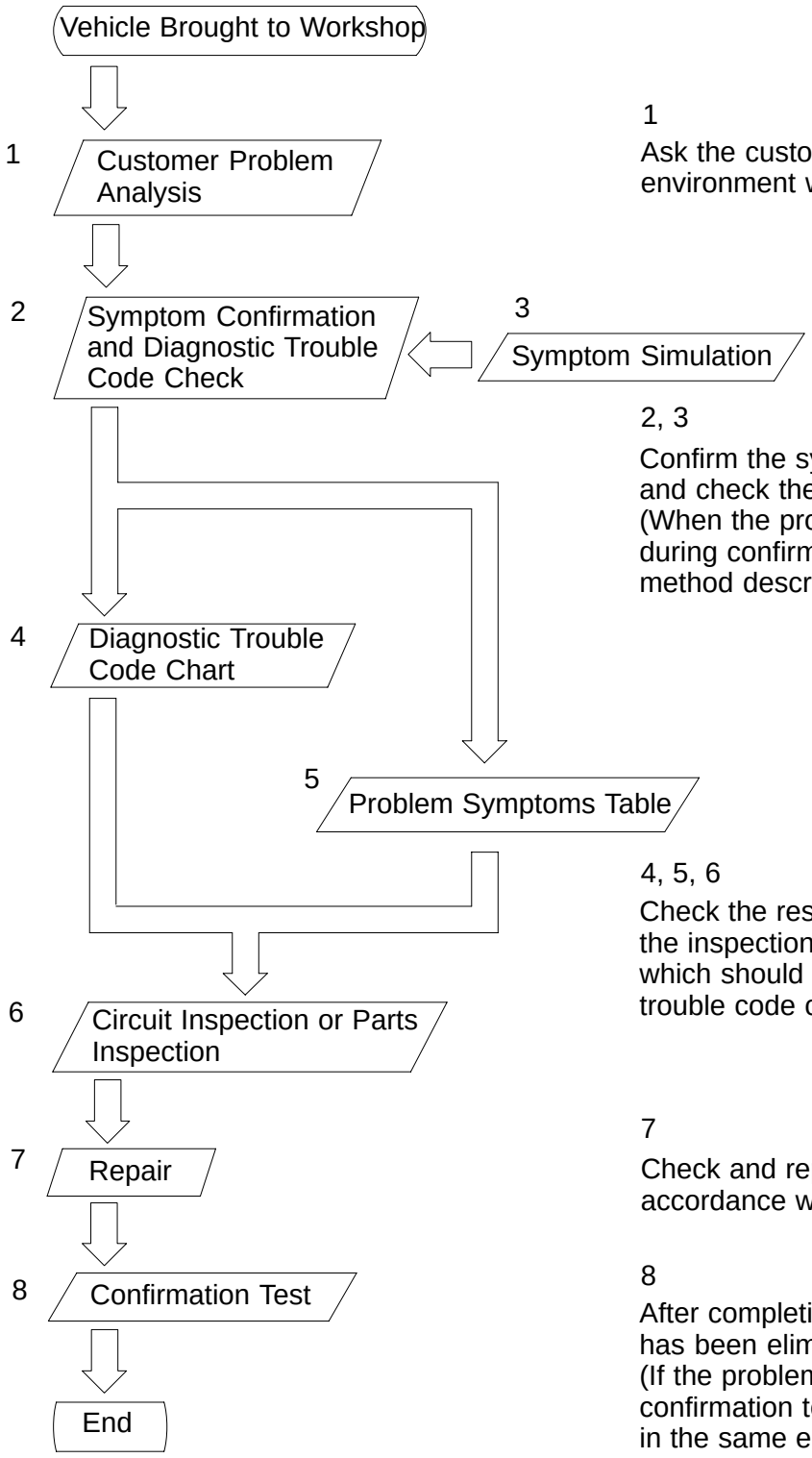

1

Ask the customer about the conditions and the environment when the problem occurred.

2, 3

Confirm the symptoms and the problem conditions, and check the diagnostic trouble codes.
(When the problem symptoms do not appear during confirmation, use the symptom simulation method described later on.)

4, 5, 6

Check the results obtained in Step 2, then confirm the inspection procedure for the system or the part which should be checked using the diagnostic trouble code chart or the problem symptoms table.

7

Check and repair the affected system or part in accordance with the instructions in Step 6.

8

After completing repairs, confirm that the problem has been eliminated.
(If the problem is not reproduced, perform the confirmation test under the same conditions and in the same environment as when it occurred for the first time.)

1. CUSTOMER PROBLEM ANALYSIS

In troubleshooting, the problem symptoms must be confirmed accurately and all preconceptions must be cleared away in order to give an accurate judgment. To ascertain just what the problem symptoms are, it is extremely important to ask the customer about the problem and the conditions at the time it occurred.

Important Point in the Problem Analysis:

The following 5 items are important points in the problem analysis. Past problems which are thought to be unrelated and the repair history, etc. may also help in some cases, so as much information as possible should be gathered and its relationship with the problem symptoms should be correctly ascertained for reference in troubleshooting. A customer problem analysis table is provided in Diagnostics section for each system for your use.

Important Points in the Customer Problem Analysis

★ What ----- Vehicle model, system name
★ When ----- Date, time, occurrence frequency
★ Where ----- Road conditions
★ Under what conditions? ----- Running conditions, driving conditions, weather conditions
★ How did it happen? ----- Problem symptoms

(Sample) Engine control system check sheet.

CUSTOMER PROBLEM ANALYSIS CHECK

ENGINE CONTROL SYSTEM Check Sheet

Inspector's Name _____

Customer's Name		**Model and Model Year**	
Driver's Name		**Frame No.**	
Data Vehicle Brought in		**Engine Model**	
License No.		**Odometer Reading**	km miles

Problem Symptoms	☐ **Engine does not Start**	☐ **Engine does not crank** ☐ **No initial combustion** ☐ **No complete combustion**
	☐ **Difficult to Start**	☐ **Engine cranks slowly** ☐ **Other** _____
	☐ **Poor Idling**	☐ **Incorrect first idle** ☐ **Idling rpm is abnormal** ☐ **High (rpm)** ☐ **Low (rpm)** ☐ **Rough idling** ☐ **Other** _____
	☐ **Poor Drive ability**	☐ **Hesitation** ☐ **Back fire** ☐ **Muffler explosion (after-fire)** ☐ **Surging** ☐ **Knocking** ☐ **Other** _____
	☐ **Engine Stall**	☐ **Soon after starting** ☐ **After accelerator pedal depressed** ☐ **After accelerator pedal released** ☐ **During A/C operation** ☐ **Shifting from N to D** ☐ **Other** _____
	☐ **Others**	

☐ **Constant** ☐ **Sometimes (times per day/month)**

2. SYMPTOM CONFIRMATION AND DIAGNOSTIC TROUBLE CODE CHECK

The diagnostic system in the AVALON fulfills various functions. The first function is the Diagnostic Trouble Code Check in which a malfunction in the signal circuits to the ECU is stored in code in the ECU memory at the time of occurrence, to be output by the technician during troubleshooting. Another function is the Input Signal Check which checks if the signals from various switches are sent to the ECU correctly.
By using these check functions, the problem areas can be narrowed down quickly and troubleshooting can be performed effectively. Diagnostic functions are incorporated in the following systems in the AVALON.

System	Diagnostic Trouble Code Check	Input Signal Check (Sensor Check)	Diagnostic Test Mode (Active Test)
Engine	◆ (with Check Mode)	◆	◆
Automatic Transaxle	◆ (with Check Mode)		
Anti-Lock Brake System With Electronic Brake Force Distribution (EBD)	◆	◆	
ABS With EBD & BA & TRAC & VSC System	◆	◆	◆
Supplemental Restraint System	◆		
Cruise Control System	◆	◆	
Engine Immobilizer System	◆		
Multiplex Communication System	◆		
Air Conditioning System	◆		

In diagnostic trouble code check, it is very important to determine whether the problem indicated by the diagnostic trouble code is still occurring or occurred in the past but returned to normal at present. In addition, it must be checked in the problem symptom check whether the malfunction indicated by the diagnostic trouble code is directly related to the problem symptom or not. For this reason, the diagnostic trouble codes should be checked before and after the symptom confirmation to determine the current conditions, as shown in the table below. If this is not done, it may, depending on the case, result in unnecessary troubleshooting for normally operating systems, thus making it more difficult to locate the problem, or in repairs not pertinent to the problem. Therefore, always follow the procedure in correct order and perform the diagnostic trouble code check.

DIAGNOSTIC TROUBLE CODE CHECK PROCEDURE

Diagnostic Trouble Code Check (Make a note of and then clear)	**Confirmation of Symptoms**	**Diagnostic Trouble Code Check**	**Problem Condition**
Diagnostic Trouble Code Display	Problem symptoms exist	Same diagnostic trouble code is displayed	Problem is still occurring in the diagnostic circuit
⇨		Normal code is displayed	The problem is still occurring in a place other than in the diagnostic circuit (The diagnostic trouble code displayed first is either for a past problem or it is a secondary problem)
⇨	No problem symptoms exist		The problem occurred in the diagnostic circuit in the past
Normal Code Display ⇨	Problem symptoms exist	Normal code is displayed	The problem is still occurring in a place other than in the diagnostic circuit
⇨	No problem symptoms exist	Normal code is displayed	The problem occurred in a place other than in the diagnostic circuit in the past

Taking into account the points on the previous page, a flow chart showing how to proceed with troubleshooting using the diagnostic trouble code check is shown below. This flow chart shows how to utilize the diagnostic trouble code check effectively, then by carefully checking the results, indicates how to proceed either to diagnostic trouble code troubleshooting or to troubleshooting of problem symptoms table.

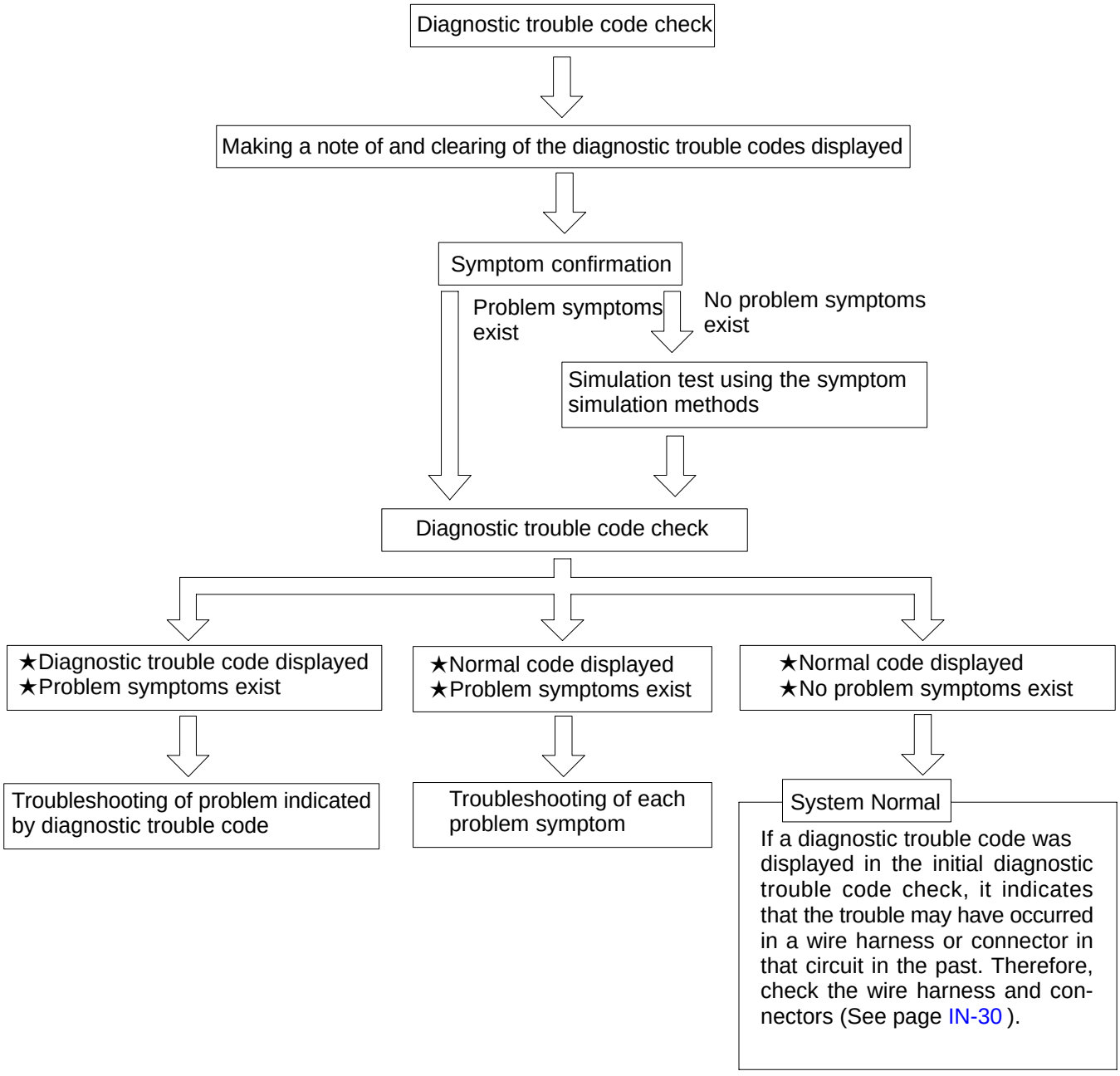

3. SYMPTOM SIMULATION

The most difficult case in troubleshooting is when there are no problem symptoms occurring. In such cases, a thorough customer problem analysis must be carried out, then simulate the same or similar conditions and environment in which the problem occurred in the customer's vehicle. No matter how much experience a technician has, or how skilled he may be, if he proceeds to troubleshoot without confirming the problem symptoms he will tend to overlook something important in the repair operation and make a wrong guess somewhere, which will only lead to a standstill. For example, for a problem which only occurs when the engine is cold, or for a problem which occurs due to vibration caused by the road during driving, etc., the problem can never be determined so long as the symptoms are confirmed with the engine hot condition or the vehicle at a standstill. Since vibration, heat or water penetration (moisture) is likely cause for problem which is difficult to reproduce, the symptom simulation tests introduced here are effective measures in that the external causes are applied to the vehicle in a stopped condition.

Important Points in the Symptom Simulation Test:

In the symptom simulation test, the problem symptoms should of course be confirmed, but the problem area or parts must also be found out. To do this, narrow down the possible problem circuits according to the symptoms before starting this test and connect a tester beforehand. After that, carry out the symptom simulation test, judging whether the circuit being tested is defective or normal and also confirming the problem symptoms at the same time. Refer to the problem symptoms table for each system to narrow down the possible causes of the symptom.

1	**VIBRATION METHOD: When vibration seems to be the major cause.**
CONNECTORS Slightly shake the connector vertically and horizontally. **WIRE HARNESS** Slightly shake the wire harness vertically and horizontally. The connector joint, fulcrum of the vibration, and body through portion are the major areas to be checked thoroughly.	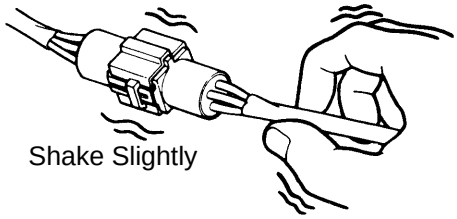 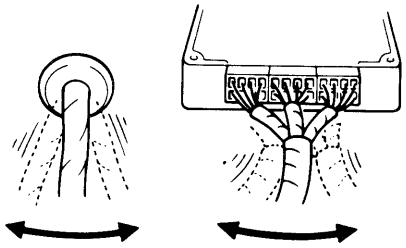 FI2331 FI2332
PARTS AND SENSOR Apply slight vibration with a finger to the part of the sensor considered to be the problem cause and check that the malfunction occurs. HINT: Applying strong vibration to relays may result in open relays.	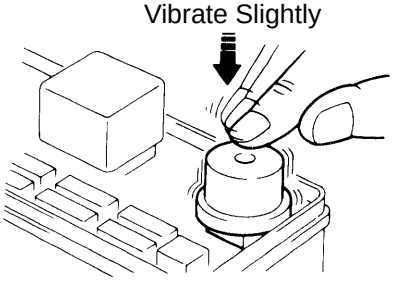 FI2330

V07268

2	**HEAT METHOD: When the problem seems to occur when the suspect area is heated.**

Heat the component that is the likely cause of the malfunction with a hair dryer or similar object. Check to see if the malfunction occurs.

NOTICE:

(1) Do not heat to more than 60 ˚C (140 ˚F). (Temperature is limited not to damage the components.)

(2) Do not apply heat directly to parts in the ECU.

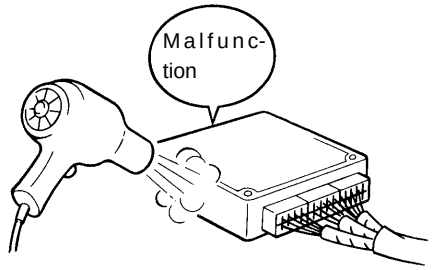

FI2334

3	**WATER SPRINKLING METHOD: When the malfunction seems to occur on a rainy day or in a high-humidity condition.**

Sprinkle water onto the vehicle and check to see if the malfunction occurs.

NOTICE:

(1) Never sprinkle water directly into the engine compartment, but indirectly change the temperature and humidity by applying water spray onto the radiator front surface.

(2) Never apply water directly onto the electronic components.

HINT:

If a vehicle is subject to water leakage, the leaked water may contaminate the ECU. When testing a vehicle with a water leakage problem, special caution must be taken.



FI6649

4	**OTHER: When a malfunction seems to occur when electrical load is excessive.**

Turn on all electrical loads including the heater blower, head lights, rear window defogger, etc. and check to see if the malfunction occurs.

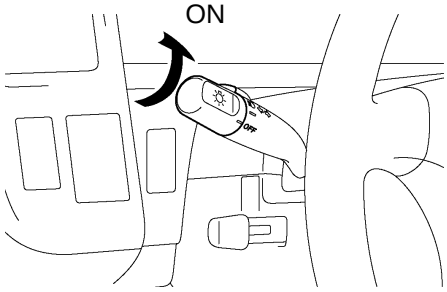

B02389

B02390

4. DIAGNOSTIC TROUBLE CODE CHART

The inspection procedure is shown in the table below. This table permits efficient and accurate troubleshooting using the diagnostic trouble codes displayed in the diagnostic trouble code check. Proceed with troubleshooting in accordance with the inspection procedure given in the diagnostic chart corresponding to the diagnostic trouble codes displayed. The engine diagnostic trouble code chart is shown below as an example.

★DTC No.
Indicates the diagnostic trouble code.
★Page or Instructions
Indicates the page where the inspection procedure for each circuit is to be found, or gives instructions for checking and repairs.

★Trouble Area
Indicates the suspect area of the problem.

★Detection Item
Indicates the system of the problem or contents of the problem.

DTC CHART (SAE Controlled)

HINT:
Parameters listed in the chart may not be exactly the same as your reading due to the type of instrument or other factors.

If a malfunction code is displayed during the DTC check mode, check the circuit for that code listed in the table below. For details of each code, turn to the page referred to under the "See page" for the respective "DTC No." in the DTC chart.

DTC No. (See page)	Detection Item	Trouble Area	MIL*	Memory
P0100 (DI-24)	Mass Air Flow Circuit Malfunction	★Open or short in mass air flow meter circuit ★Mass air flow meter ★ECM	○	○
P0101 (DI-28)	Mass Air Flow Circuit Range/ Performance Problem	★Mass air flow meter	○	○
P0110 (DI-29)	Intake Air Temp. Circuit Malfunction	★Open or short in intake air temp. sensor circuit ★Intake air temp. sensor ★ECM	○	○
P0115 (DI-33)	Engine Coolant Temp. Circuit Malfunction	★Open or short in engine coolant temp. sensor circuit ★Engine coolant temp. sensor ★ECM	○	○
P0116 (DI-37)	Engine Coolant Temp. Circuit Range/ Performance Problem	★Engine coolant temp. sensor ★Cooling system	○	○
	/Pedal Position Sensor/Switch nction	★Open or short in throttle position sensor circuit ★Throttle position sensor ★ECM		
	osition Sensor/ Switch rformance Prob-	★Throttle position sensor		

5. PROBLEM SYMPTOMS TABLE

The suspected circuits or parts for each problem symptom are shown in the table below. Use this table to troubleshoot the problem when a ”Normal” code is displayed in the diagnostic trouble code check but the problem is still occurring. Numbers in the table indicate the inspection order in which the circuits or parts should be checked.

HINT:

When the problem is not detected by the diagnostic system even though the problem symptom is present, it is considered that the problem is occurring outside the detection range of the diagnostic system, or that the problem is occurring in a system other than the diagnostic system.

★Page
Indicates the page where the flow chart for each circuit is located.

★Circuit Inspection, Inspection Order
Indicates the circuit which needs to be checked for each problem symptom. Check in the order indicated by the numbers.

★Problem Symptom

★Circuit or Part Name
Indicates the circuit or part which needs to be checked.

PROBLEM SYMPTOMS TABLE

Symptom	Suspect Area	See page
Engine does not crank (Does not start)	1. Starter and starter relay	ST-2 ST-17
No initial combustion (Does not start)	1. ECM power source circuit 2. Fuel pump control circuit 3. Engine control module (ECM)	DI-147 DI-151 IN-29
No complete combustion (Does not start)	1. Fuel pump control circuit	DI-151
Engine cranks normally (Difficult to start)	1. Starter signal circuit 2. Fuel pump control circuit 3. Compression	DI-144 DI-151 EM-3
Cold engine (Difficult to start)	1. Starter signal circuit 2. Fuel pump control circuit	DI-144 DI-151
Hot engine	1. Starter signal circuit 2. Fuel pump control circuit	DI-144 DI-151
idle speed (Poor idling)	1. A/C signal circuit (Compressor circuit) 2. ECM power source circuit	AC-88
ling)	1. A/C signal circuit 2. Fuel pump control circuit	
	1. Compression 2. Fuel pump control circuit	

6. CIRCUIT INSPECTION

How to read and use each page is shown below.

★Diagnostic Trouble Code No. and Detection Item

★Circuit Description
The major role and operation, etc. of the circuit and its component parts are explained.

DTC	P0325	Knock Sensor 1 Circuit Malfunction

CIRCUIT DESCRIPTION

Knock sensor is fitted to the cylinder block to detect engine knocking. This sensor contains a piezoelectric element which generates a voltage when it becomes deformed, which occurs when the cylinder block vibrates due to knocking. If engine knocking occurs, ignition timing is retarded to suppress it.

DTC No.	DTC Detecting Condition	Trouble Area
P0325	No knock sensor 1 signal to ECM with engine speed, 1,200 rpm or more.	★Open or short in knock sensor1 circuit ★Knock sensor 1 (looseness) ★ECM

If the ECM detects the above diagnosis conditions, it operates the fail safe function in which the corrective retard angle value is set to the maximum value.

★Indicates the diagnostic trouble code, diagnostic trouble code set parameter and suspect area of the problem.

WIRING DIAGRAM

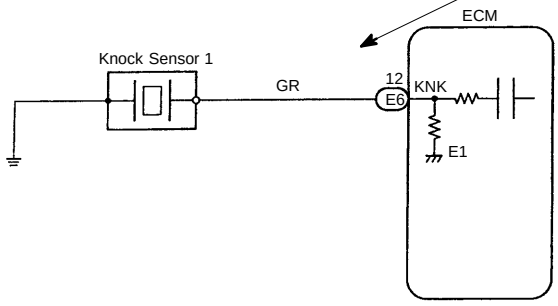

★Wiring Diagram
This shows a wiring diagram of the circuit.
Use this diagram together with ELECTRICAL WIRING DIAGRAM to thoroughly understand the circuit.
Wire colors are indicated by an alphabetical code.
B = Black, L = Blue, R = Red, BR = Brown,
LG = Light Green, V = Violet, G = Green,
O = Orange, W = White, GR = Gray, P = Pink,
Y = Yellow, SB = Sky Blue
The first letter indicates the basic wire color and the second letter indicates the color of the stripe.

V08423

★Indicates the position of the ignition switch during the check.

LOCK
Ignition Switch LOCK (OFF)

ON
Ignition Switch ON

START
Ignition Switch START

ACC
Ignition Switch ACC

★Inspection Procedure
Use the inspection procedure to determine if the circuit is normal or abnormal, and, if it is abnormal, use it to determine whether the problem is located in the sensors, actuators, wire harness or ECU.

INSPECTION PROCEDURE

1	**Check continuity between terminal KNK of ECM connector and body ground.**

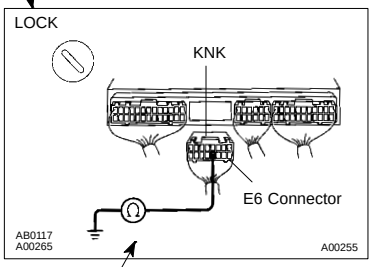

PREPARATION:
(a) Remove the glove compartment (See page SF-68).
(b) Disconnect the E6 connector of ECM.

CHECK:
Measure resistance between terminal KNK of ECM connector and body ground.

OK:
Resistance: 1 MΩ or higher

OK	**Go to step 3.**

NG

2	**Check knock sensor (See page SF-61).**

OK	**Replace knock sensor.**

★Indicates the place to check the voltage or resistance.
★Indicates the connector position to checked, from the front or back side.

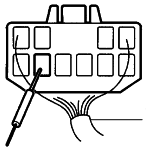

Check from the connector back side.
(with harness)



Check from the connector front side. (without harness)
In this case, care must be taken not to bend the terminals.

★Indicates the condition of the connector of ECU during the check.

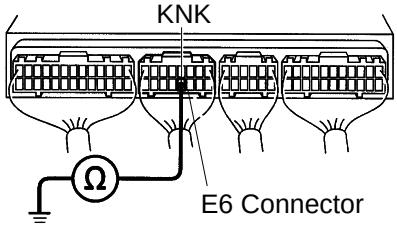

Connector being checked is connected.

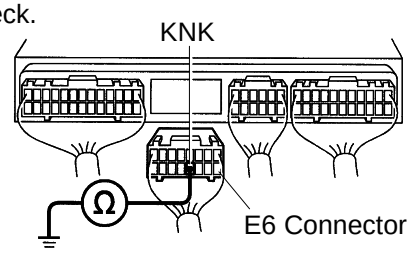

Connector being checked is disconnected.

V08425

IN05X-11

HOW TO USE THE DIAGNOSTIC CHART AND INSPECTION PROCEDURE

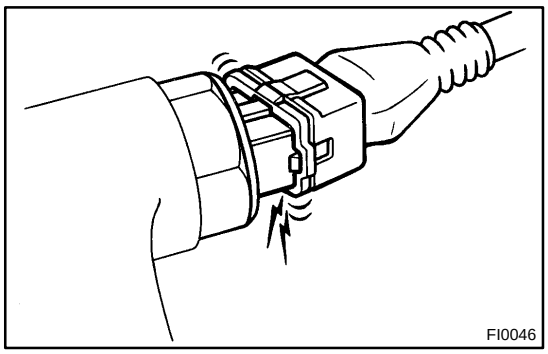
FI0046

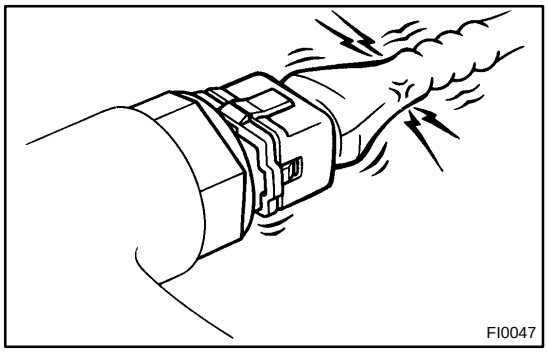
FI0047

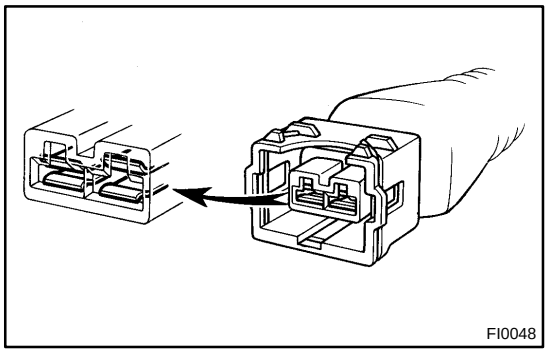
FI0048

1. CONNECTOR CONNECTION AND TERMINAL INSPECTION

★ For troubleshooting, diagnostic trouble code charts or problem symptom table are provided for each circuit with detailed inspection procedures on the following pages.

★ When all the component parts, wire harnesses and connectors of each circuit except the ECU are found to be normal in troubleshooting, then it is determined that the problem is in the ECU. Accordingly, if diagnosis is performed without the problem symptoms occurring, refer to Step 8 to replace the ECU. So always confirm that the problem symptoms are occurring, or proceed with inspection while using the symptom simulation method.

★ The instructions ”Check wire harness and connector” and ”Check and replace ECU” which appear in the inspection procedure, are common and applicable to all diagnostic trouble codes. Follow the procedure outlined below whenever these instructions appear.

OPEN CIRCUIT:

This could be due to a disconnected wire harness, faulty contact in the connector, a connector terminal pulled out, etc.

HINT:

★ It is rarely the case that a wire is broken in the middle of it. Most cases occur at the connector. In particular, carefully check the connectors of sensors and actuators

★ Faulty contact could be due to rusting of the connector terminals, to foreign materials entering terminals or a deformation of connector terminals. Simply disconnecting and reconnecting the connectors once changes the condition of the connection and may result in a return to normal operation. Therefore, in troubleshooting, if no abnormality is found in the wire harness and connector check, but the problem disappears after the check, then the cause is considered to be in the wire harness or connectors.

SHORT CIRCUIT:

This could be due to a contact between wire harness and the body ground or to a short circuit occurred inside the switch, etc.

HINT:

When there is a short circuit between the wire harness and body ground, check thoroughly whether the wire harness is caught in the body or is clamped properly.

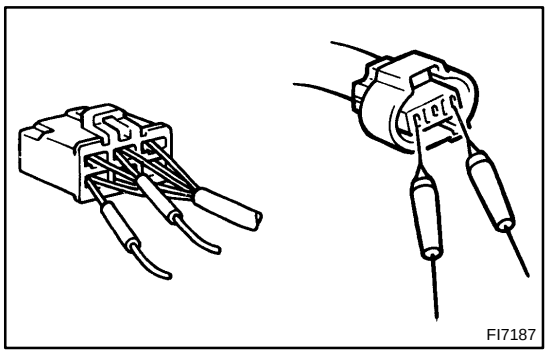

2. CONNECTOR HANDLING

When inserting tester probes into a connector, insert them from the rear of the connector. When necessary, use mini test leads. For water resistant connectors which cannot be accessed from behind, take good care not to deform the connector terminals.

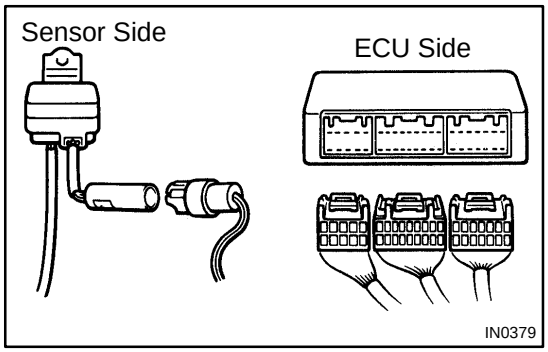

3. CONTINUITY CHECK (OPEN CIRCUIT CHECK)

(a) Disconnect the connectors at both ECU and sensor sides.

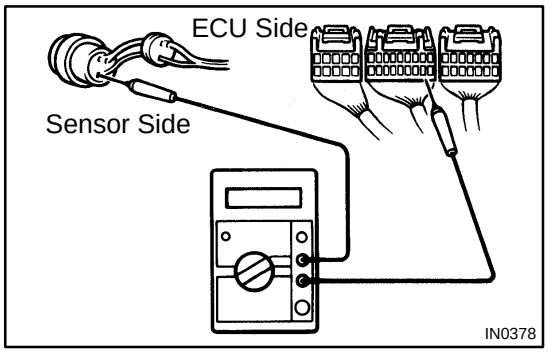

(b) Measure the resistance between the applicable terminals of the connectors.

Resistance: 1 Ω or less

HINT:

Measure the resistance while lightly shaking the wire harness vertically and horizontally.

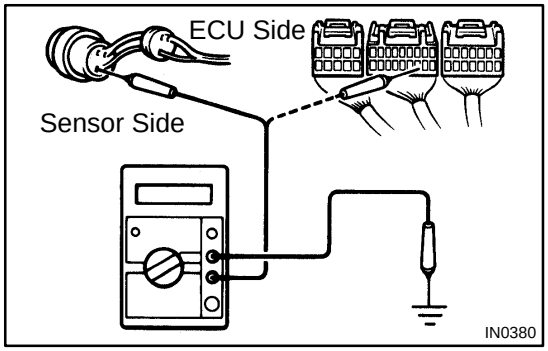

4. RESISTANCE CHECK (SHORT CIRCUIT CHECK)

(a) Disconnect the connectors on both ends.

(b) Measure the resistance between the applicable terminals of the connectors and body ground. Be sure to carry out this check on the connectors on both ends.

Resistance: 1 MΩ or higher

HINT:

Measure the resistance while lightly shaking the wire harness vertically and horizontally.

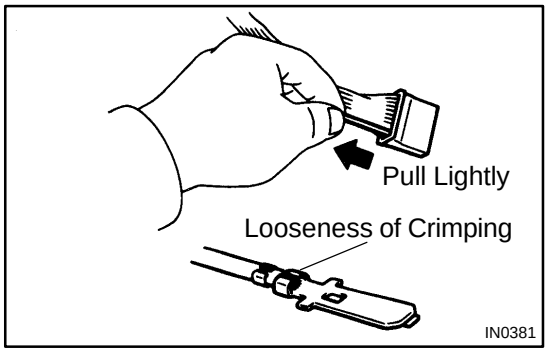

5. VISUAL CHECK AND CONTACT PRESSURE CHECK

(a) Disconnect the connectors at both ends.

(b) Check for rust or foreign material, etc. in the terminals of the connectors.

(c) Check crimped portions for looseness or damage and check that the terminals are secured in lock portion.

HINT:

The terminals should not come out when pulled lightly from the back.

(d) Prepare a test male terminal and insert it in the female terminal, then pull it out.

NOTICE:

When testing a gold-plated female terminal, always use a gold-plated male terminal.

HINT:

When the test terminal is pulled out more easily than others, there may be poor contact in that section.

Fig. 1

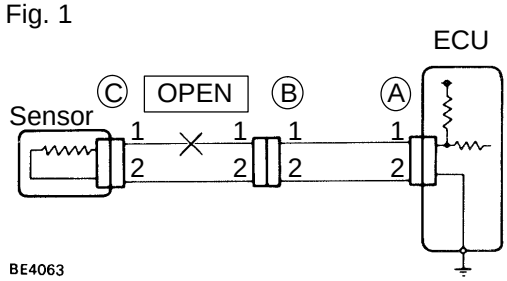

6. CHECK OPEN CIRCUIT

For the open circuit in the wire harness in Fig. 1, perform "(a) Continuity Check" or "(b) Voltage Check" to locate the section.

Fig. 2

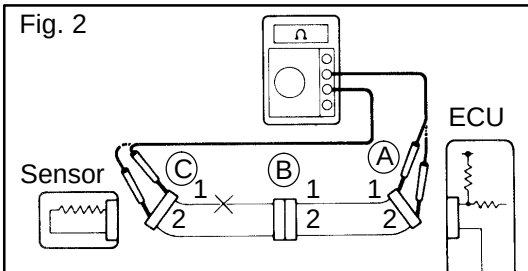

(a) Check the continuity.

(1) Disconnect connectors "A" and "C" and measure the resistance between them.

In the case of Fig. 2:

Between terminal 1 of connector "A" and terminal 1 of connector "C" → No continuity (open)

Between terminal 2 of connector "A" and terminal 2 of connector "C" → Continuity

Therefore, it is found out that there is an open circuit between terminal 1 of connector "A" and terminal 1 of connector "C".

Fig. 3

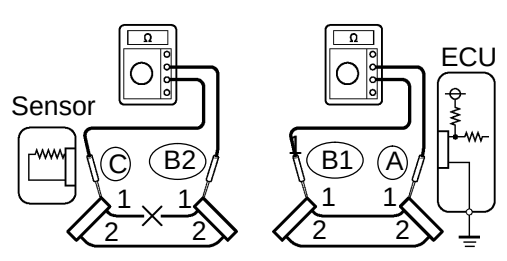

(2) Disconnect connector "B" and measure the resistance between the connectors.

In the case of Fig. 3:

Between terminal 1 of connector "A" and terminal 1 of connector "B1" → Continuity

Between terminal 1 of connector "B2" and terminal 1 of connector "C" → No continuity (open)

Therefore, it is found out that there is an open circuit between terminal 1 of connector "B2" and terminal 1 of connector "C".

Fig. 4

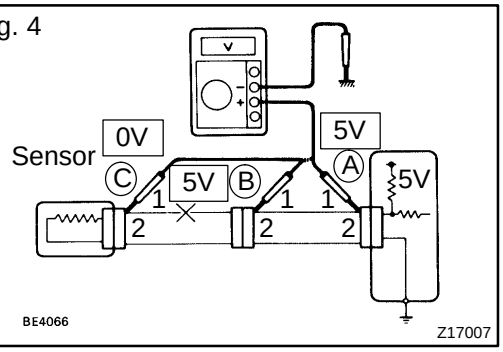

(b) Check the voltage.

In a circuit in which voltage is applied (to the ECU connector terminal), an open circuit can be checked for by conducting a voltage check.

As shown in Fig. 4, with each connector still connected, measure the voltage between body ground and terminal 1 of connector "A" at the ECU 5V output terminal, terminal 1 of connector "B", and terminal 1 of connector "C", in that order.

If the results are:

5V: Between Terminal 1 of connector "A" and Body Ground
5V: Between Terminal 1 of connector "B" and Body Ground
0V: Between Terminal 1 of connector "C" and Body Ground

Then it is found out that there is an open circuit in the wire harness between terminal 1 of "B" and terminal 1 of "C".

Fig. 5

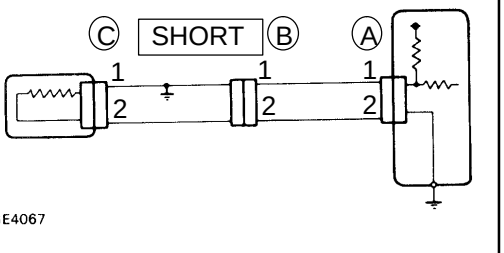

7. CHECK SHORT CIRCUIT

If the wire harness is ground shorted as in Fig. 5, locate the section by conducting a "continuity check with ground".

Fig. 6

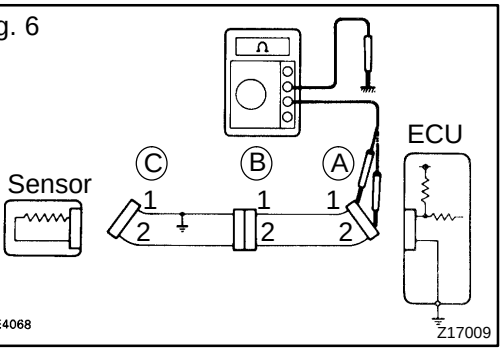

Check the continuity with ground.

(1) Disconnect connectors "A" and "C" and measure the resistance between terminal 1 and 2 of connector "A" and body ground.

In the case of Fig. 6:

Between terminal 1 of connector "A" and body ground → Continuity (short)

Between terminal 2 of connector "A" and body ground → No continuity

Therefore, it is found out that there is a short circuit between terminal 1 of connector "A" and terminal 1 of connector "C".

Fig. 7

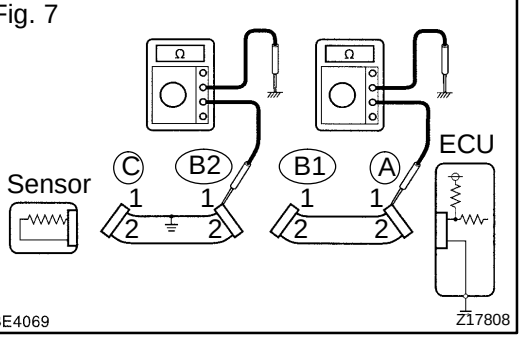

(2) Disconnect connector ”B” and measure the resistance between terminal 1 of connector ”A” and body ground, and terminal 1 of connector ”B2” and body ground.
In the case of Fig. 7:
Between terminal 1 of connector ”A” and body ground → No continuity
Between terminal 1 of connector ”B2” and body ground → Continuity (short)
Therefore, it is found out that there is a short circuit between terminal 1 of connector ”B2” and terminal 1 of connector ”C”.

8. CHECK AND REPLACE ECU

First check the ECU ground circuit. If it is faulty, repair it. If it is normal, the ECU could be faulty, so replace the ECU with a normal functioning one and check that the symptoms appear.

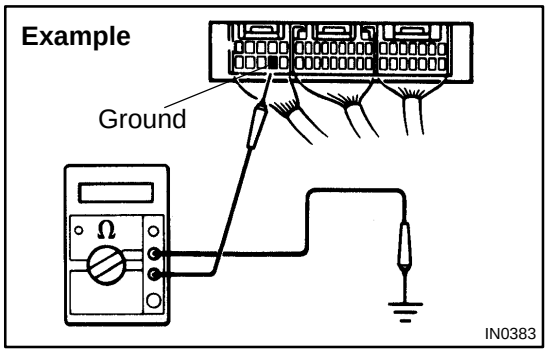

(1) Measure the resistance between the ECU ground terminal and the body ground.

Resistance: 1 Ω or less

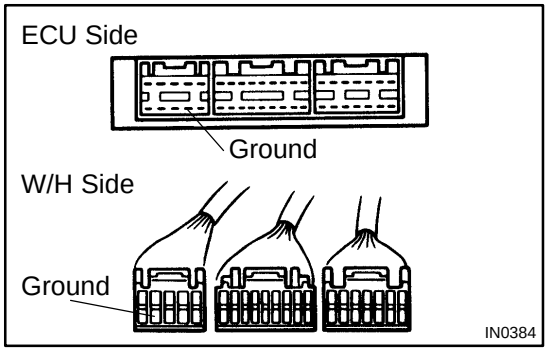

(2) Disconnect the ECU connector, check the ground terminals on the ECU side and the wire harness side for bend and check the contact pressure.

HOW TO USE THIS MANUAL

IN00U-36

GENERAL INFORMATION

1. INDEX

An INDEX is provided on the first page of each section to guide you to the item to be repaired. To assist you in finding your way through the manual, the section title and major heading are given at the top of every page.

2. PRECAUTION

At the beginning of each section, a PRECAUTION is given that pertains to all repair operations contained in that section.

Read these precautions before starting any repair task.

3. TROUBLESHOOTING

TROUBLESHOOTING tables are included for each system to help you diagnose the problem and find the cause. The fundamentals of how to proceed with troubleshooting are described on page IN-20 .

Be sure to read this before performing troubleshooting.

4. PREPARATION

Preparation lists the SST (Special Service Tools), recommended tools, equipment, lubricant and SSM (Special Service Materials) which should be prepared before beginning the operation and explains the purpose of each one.

5. REPAIR PROCEDURES

Most repair operations begin with an overview illustration. It identifies the components and shows how the parts fit together.

Example:

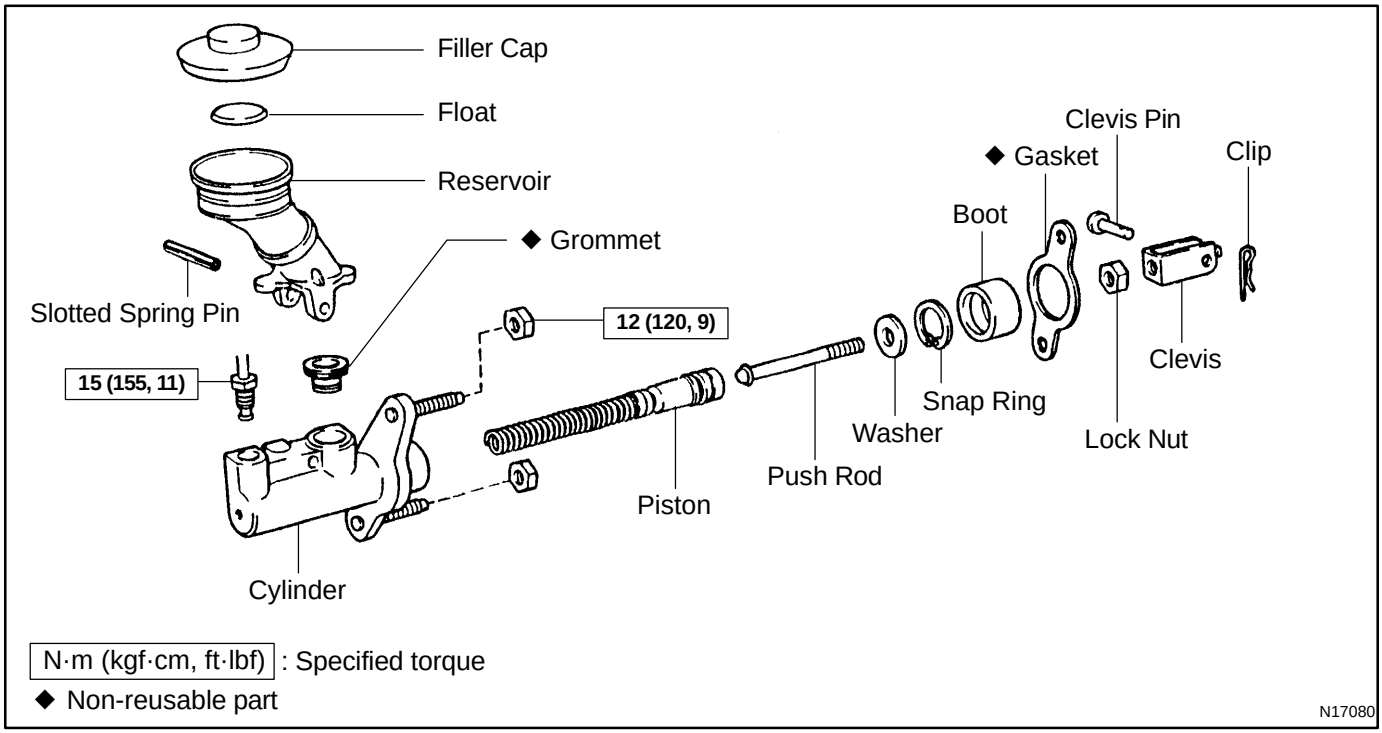

The procedures are presented in a step-by-step format:

- ★ The illustration shows what to do and where to do it.
- ★ The task heading tells what to do.
- ★ The detailed text tells how to perform the task and gives other information such as specifications and warnings.

Example:

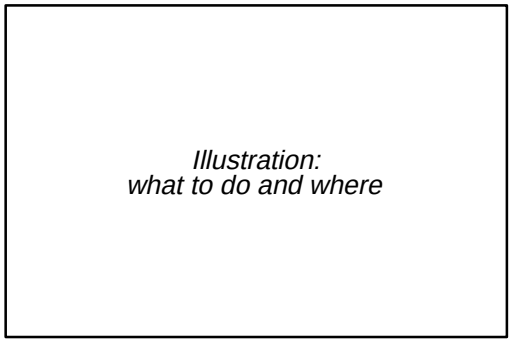

Task heading : what to do

21. CHECK PISTON STROKE OF OVERDRIVE BRAKE

(a) Place SST and a dial indicator onto the overdrive brake piston as shown in the illustration.

SST 09350-30020 (09350-06120)

Set part No. *Component part No.*

Detailed text : how to do task

(b) Measure the stroke applying and releasing the compressed air (392 — 785 kPa, 4 — 8 kgf/cm^2 or 57 — 114 psi) as shown in the illustration.

Piston stroke: 1.40 — 1.70 mm (0.0551 — 0.0669 in.)

Specification

This format provides the experienced technician with a FAST TRACK to the information needed. The upper case task heading can be read at a glance when necessary, and the text below it provides detailed information. Important specifications and warnings always stand out in bold type.

6. REFERENCES

References have been kept to a minimum. However, when they are required you are given the page to refer to.

7. SPECIFICATIONS

Specifications are presented in bold type throughout the text where needed. You never have to leave the procedure to look up your specifications. They are also found in Service Specifications section for quick reference.

8. CAUTIONS, NOTICES, HINTS:

- ★ CAUTIONS are presented in bold type, and indicate there is a possibility of injury to you or other people.
- ★ NOTICES are also presented in bold type, and indicate the possibility of damage to the components being repaired.
- ★ HINTS are separated from the text but do not appear in bold. They provide additional information to help you perform the repair efficiently.

9. SI UNIT

The UNITS given in this manual are primarily expressed according to the SI UNIT (International System of Unit), and alternately expressed in the metric system and in the English System.

Example:

Torque: 30 N·m (310 kgf·cm, 22 ft·lbf)

IDENTIFICATION INFORMATION

IN0CN-07

VEHICLE IDENTIFICATION AND ENGINE SERIAL NUMBER

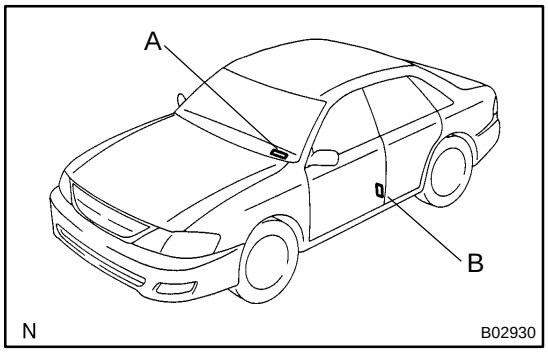

1. VEHICLE IDENTIFICATION NUMBER

The vehicle identification number is stamped on the vehicle identification number plate and the certification label, as shown in the illustration.

A: Vehicle Identification Number Plate
B: Certification Label

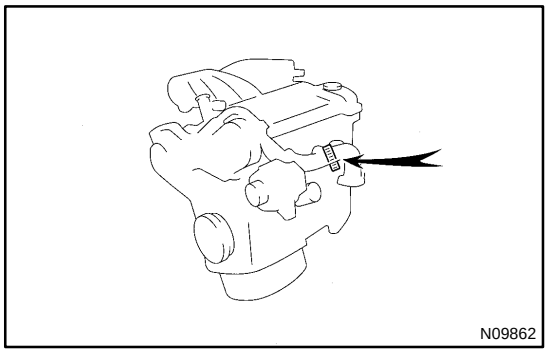

2. ENGINE SERIAL NUMBER

The engine serial number is stamped on the engine block, as shown in the illustration.

REPAIR INSTRUCTIONS

IN0CO-08

GENERAL INFORMATION

BASIC REPAIR HINT

(a) Use fender, seat and floor covers to keep the vehicle clean and prevent damage.

(b) During disassembly, keep parts in the appropriate order to facilitate reassembly.

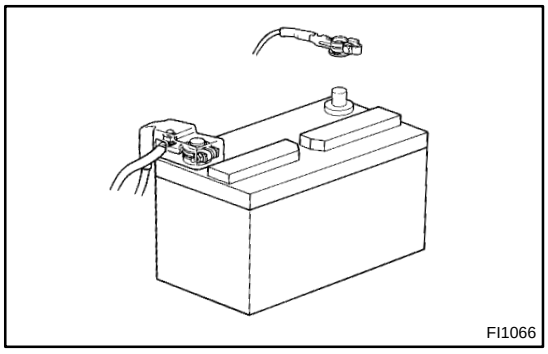
FI1066

(c) Installation and removal of battery terminal:

(1) Before performing electrical work, disconnect the negative (-) terminal cable from the battery.

(2) If it is necessary to disconnect the battery for inspection or repair, first disconnect the negative (-) terminal cable.

(3) When disconnecting the terminal cable, to prevent damage to battery terminal, loosen the cable nut and raise the cable straight up without twisting or prying it.

(4) Clean the battery terminals and cable ends with a clean shop rag. Do not scrape them with a file or other abrasive objects.

(5) Install the cable ends to the battery terminals after loosening the nut, and tighten the nut after installation. Do not use a hammer to tap the cable ends onto the terminals.

(6) Be sure the cover for the positive (+) terminal is properly in place.

(d) Check hose and wiring connectors to make sure that they are connected securely and correctly.

(e) Non-reusable parts

(1) Always replace cotter pins, gaskets, O-rings, oil seals, etc. with new ones.

(2) Non-reusable parts are indicated in the component illustrations by the " " symbol.

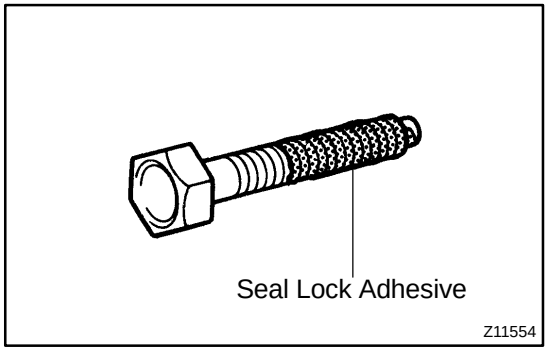

Z11554

(f) Precoated parts

Precoated parts are bolts, nuts, etc. that are coated with a seal lock adhesive at the factory.

(1) If a precoated part is retightened, loosened or caused to move in any way, it must be recoated with the specified adhesive.

(2) When reusing precoated parts, clean off the old adhesive and dry with compressed air. Then apply the specified seal lock adhesive to the bolt, nut or threads.

(3) Precoated parts are indicated in the component illustrations by the "★" symbol.

(g) When necessary, use a sealer on gaskets to prevent leaks.

(h) Carefully observe all specifications for bolt tightening torques. Always use a torque wrench.

(i) Use of special service tools (SST) and special service materials (SSM) may be required, depending on the nature of the repair. Be sure to use SST and SSM where specified and follow the proper work procedure. A list of SST and SSM can be found in Preparation section in this manual.

Medium Current Fuse and High Current Fuse
Equal Amperage Rating

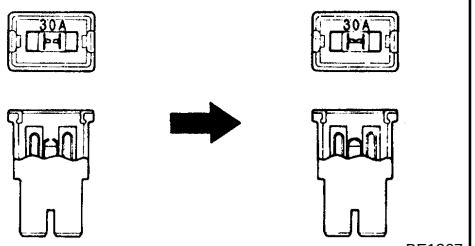

BE1367

(j) When replacing fuses, be sure the new fuse has the correct amperage rating. DO NOT exceed the rating or use one with a lower rating.

Illustration	Symbol	Part Name	Abbreviation
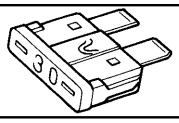 BE5594	 IN0365	FUSE	FUSE
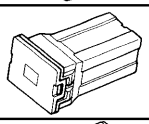 BE5595	 IN0366	MEDIUM CURRENT FUSE	M-FUSE
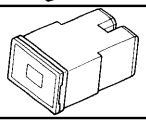 BE5596	 IN0367	HIGH CURRENT FUSE	H-FUSE
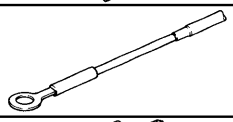 BE5597	 IN0367	FUSIBLE LINK	FL
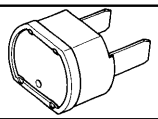 BE5598	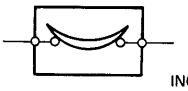 IN0368	CIRCUIT BREAKER	CB

V00076

(k) Care must be taken when jacking up and supporting the vehicle. Be sure to lift and support the vehicle at the proper locations (See page IN-8).
- Cancel the parking brake on the level place and shift the transmission in Neutral (or N position).
- When jacking up the front wheels of the vehicle at first place stoppers behind the rear wheels.
- When jacking up the rear wheels of the vehicle at first place stoppers before the front wheels.
- When either the front or rear wheels only should be jacked up, set rigid racks and place stoppers in front and behind the other wheels on the ground.
- After the vehicle is jacked up, be sure to support it on rigid racks . It is extremely dangerous to do any work on a vehicle raised on a jack alone, even for a small job that can be finished quickly.

(l) Observe the following precautions to avoid damage to the following parts:

(1) Do not open the cover or case of the ECU unless absolutely necessary. (If the IC terminals are touched, the IC may be destroyed by static electricity.)

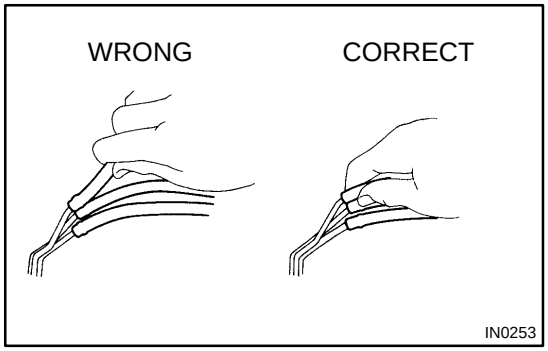

(2) To disconnect vacuum hoses, pull off the end, not the middle of the hose.

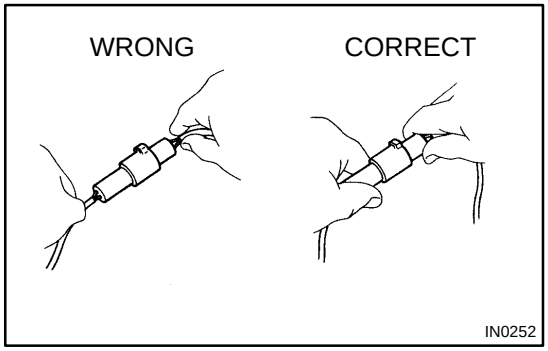

(3) To pull apart electrical connectors, pull on the connector itself, not the wires.

(4) Be careful not to drop electrical components, such as sensors or relays. If they are dropped on a hard floor, they should be replaced and not reused.

(5) When steam cleaning an engine, protect the electronic components, air filter and emission-related components from water.

(6) Never use an impact wrench to remove or install temperature switches or temperature sensors.

(7) When checking continuity at the wire connector, insert the tester probe carefully to prevent terminals from bending.

(8) When using a vacuum gauge, never force the hose onto a connector that is too large. Use a step-down adapter for adjustment. Once the hose has been stretched, it may leak air.

Example:

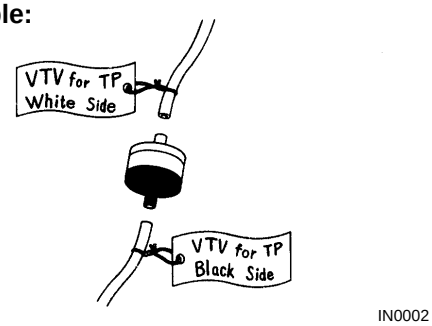

(m) Installation and removal of vacuum hose:

(1) When disconnecting vacuum hoses, use tags to identify how they should be reconnected to.

(2) After completing a job, double check that the vacuum hoses are properly connected. A label under the hood shows the proper layout.

(n) Unless otherwise stated, all resistance is measured at an ambient temperature of 20˚C (68˚F). Because the resistance may be outside specifications if measured at high temperatures immediately after the vehicle has been running, measurement should be made when the engine has cooled down.

IN0CP-07

VEHICLE LIFT AND SUPPORT LOCATIONS

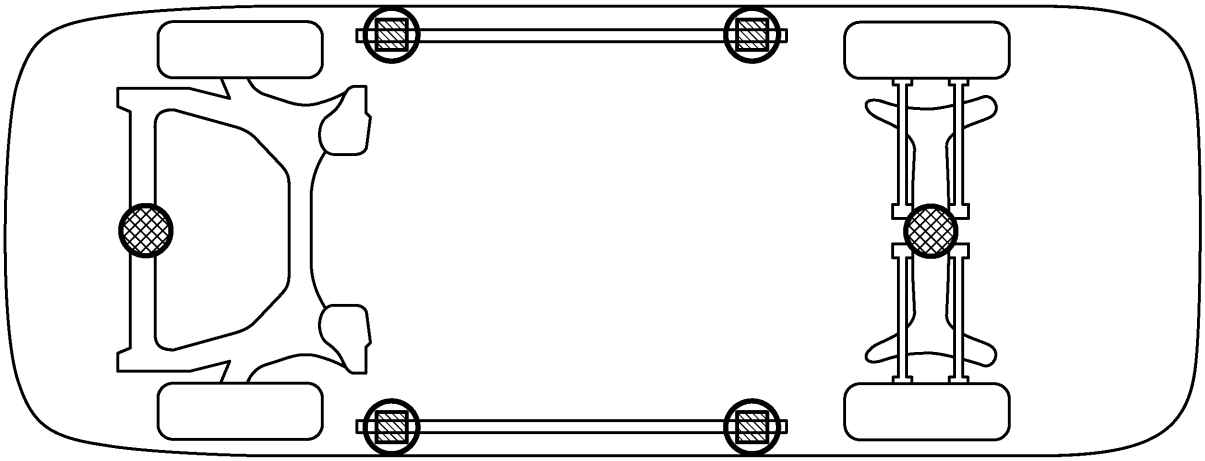

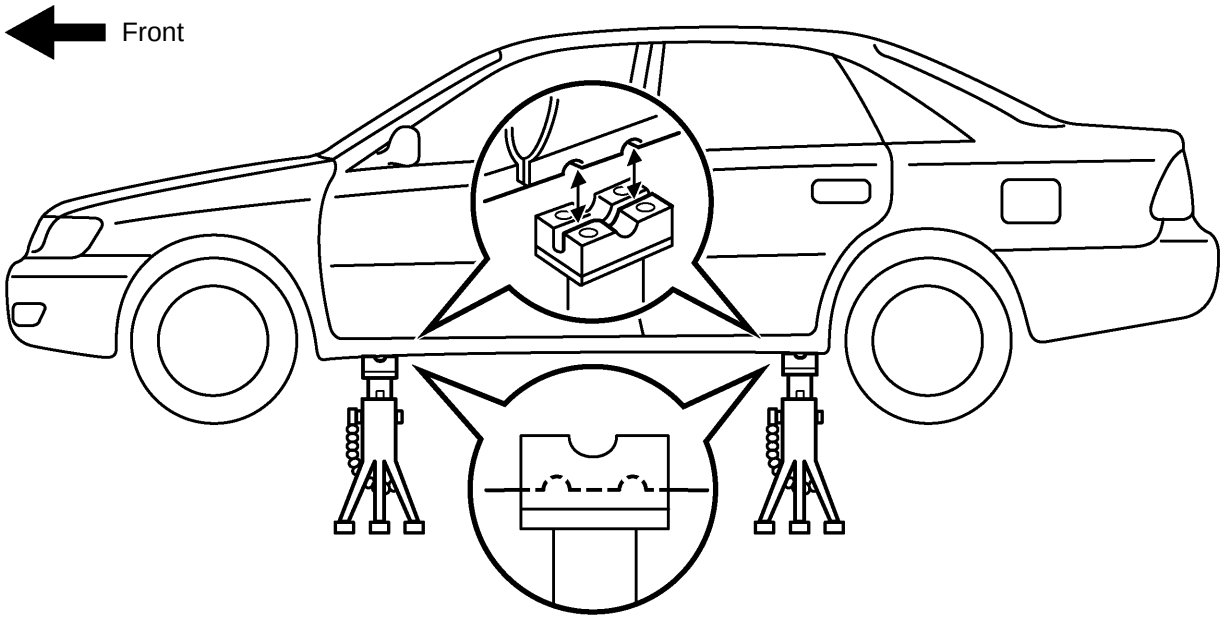

JACK POSITION

Front..... Front crossmember

Rear..... Rear axle beam

CAUTION : When jacking-up the rear and front, make sure the car is not carrying any extra weight.

PANTOGRAPH JACK POSITION

SUPPORT POSITION

Safety stand and swing arm type lift .....

N

H12928

PLATE TYPE LIFT

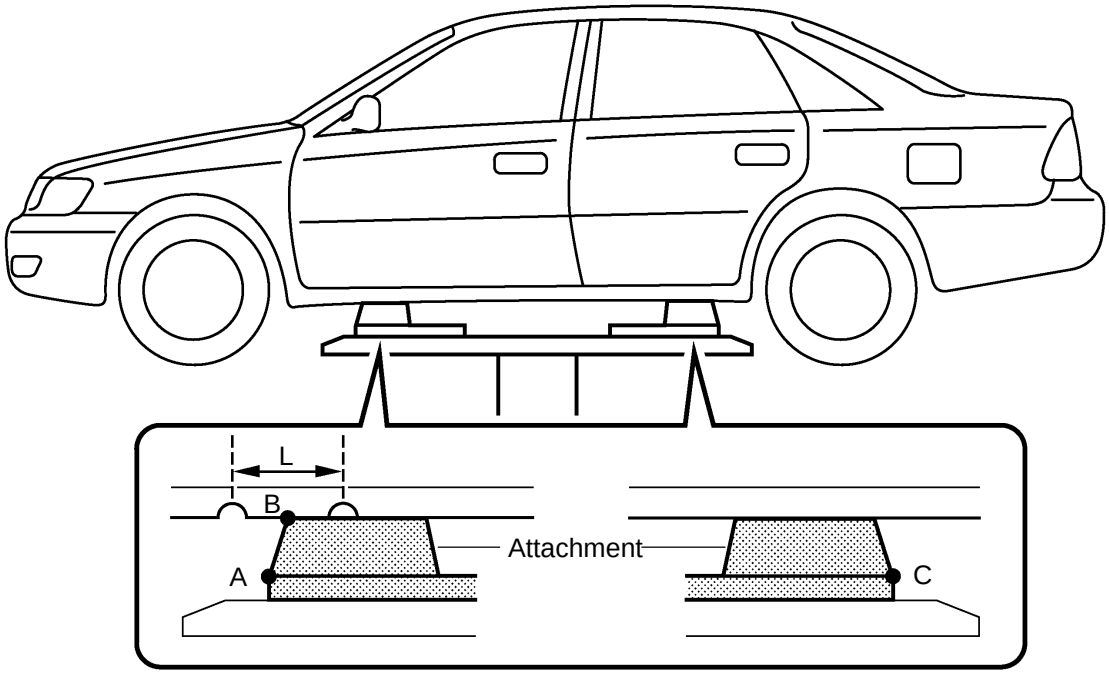

HINT :

Left and right set position	Place the vehicle over the center of the lift.
Front and rear set position	★Align the cushion gum ends of the plate with the attachment lower ends (A, C). ★Align the attachment upper end (B) with the front jack supporting point (L).

Attachment dimensions

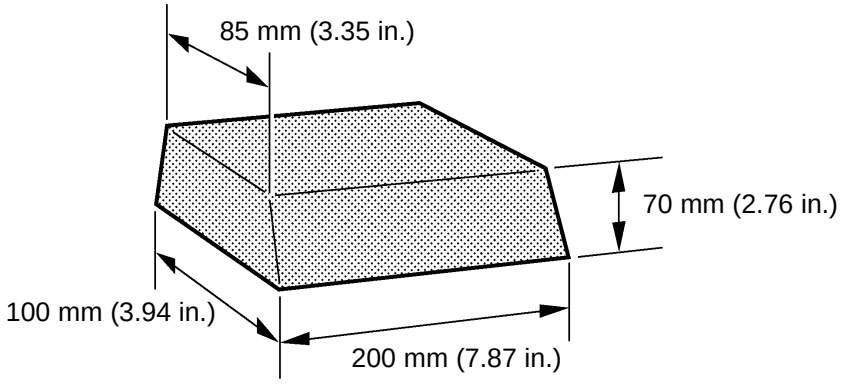

N

H12929

TERMS

IN04Q-08

ABBREVIATIONS USED IN THIS MANUAL

Abbreviations	Meaning
ABS	Anti-Lock Brake System
AC	Alternating Current
ACC	Accessory
ACIS	Acoustic Control Induction System
ACSD	Automatic Cold Start Device
A.D.D.	Automatic Disconnecting Differential
A/F	Air-Fuel Ratio
AHC	Active Height Control Suspension
ALR	Automatic Locking Retractor
ALT	Alternator
AMP	Amplifier
ANT	Antenna
APPROX.	Approximately
A/T	Automatic Transmission (Transaxle)
ATF	Automatic Transmission Fluid
AUTO	Automatic
AUX	Auxiliary
AVG	Average
AVS	Adaptive Variable Suspension
BA	Brake Assist
BACS	Boost Altitude Compensation System
BAT	Battery
BDC	Bottom Dead Center
B/L	Bi-Level
B/S	Bore-Stroke Ratio
BTDC	Before Top Dead Center
BVSV	Bimetallic Vacuum Switching Valve
Calif.	California
CB	Circuit Breaker
CCo	Catalytic Converter For Oxidation
CD	Compact Disc
CF	Cornering Force
CG	Center Of Gravity
CH	Channel
COMB.	Combination
CPE	Coupe
CPS	Combustion Pressure Sensor
CPU	Central Processing Unit
CRS	Child Restraint System
CTR	Center
C/V	Check Valve
CV	Control Valve

CW	Curb Weight
DC	Direct Current
DEF	Defogger
DFL	Deflector
DIFF.	Differential
DIFF. LOCK	Differential Lock
D/INJ	Direct Injection
DLI	Distributorless Ignition
DOHC	Double Over Head Cam
DP	Dash Pot
DS	Dead Soak
DSP	Digital Signal Processor
EBD	Electronic Brake Force Distribution
ECAM	Engine Control And Measurement System
ECD	Electronic Controlled Diesel
ECDY	Eddy Current Dynamometer
ECU	Electronic Control Unit
ED	Electro-Deposited Coating
EDU	Electronic Driving Unit
EDIC	Electric Diesel Injection Control
EFI	Electronic Fuel Injection
E/G	Engine
EGR-VM	Egr-Vacuum Modulator
ELR	Emergency Locking Retractor
ENG	Engine
ESA	Electronic Spark Advance
ETCS	Electronic Throttle Control System
EVP	Evaporator
E-VRV	Electric Vacuum Regulating Valve
EXH	Exhaust
FE	Fuel Economy
FF	Front-Engine Front-Wheel-Drive
F/G	Fuel Gage
FIPG	Formed In Place Gasket
FL	Fusible Link
F/P	Fuel Pump
FPU	Fuel Pressure Up
Fr	Front
FR	Front-Engine Rear-Wheel-Drive
F/W	Flywheel
FW/D	Flywheel Damper
FWD	Front-Wheel-Drive
GAS	Gasoline
GND	Ground
HAC	High Altitude Compensator
H/B	Hatchback

H-FUSE	High Current Fuse
HI	High
HID	High Intensity Discharge (Head Lamp)
HSG	Housing
HT	Hard Top
HWS	Heated Windshield System
IAC	Idle Air Control
IC	Integrated circuit
IDI	Indirect Diesel Injection
IFS	Independent Front Suspension
IG	Ignition
IIA	Integrated Ignition Assembly
IN	Intake (Manifold, Valve)
INT	Intermittent
I/P	Instrument Panel
IRS	Independent Rear Suspension
J/B	Junction Block
J/C	Junction Connector
KD	Kick-Down
LAN	Local Area Network
LB	Liftback
LCD	Liquid Crystal Display
LED	Light Emitting Diode
LH	Left-Hand
LHD	Left-Hand Drive
L/H/W	Length, Height, Width
LLC	Long-Life Coolant
LNG	Liquified Natural Gas
LO	Low
LPG	Liquified Petroleum Gas
LSD	Limited Slip Differential
LSP & PV	Load Sensing Proportioning And Bypass Valve
LSPV	Load Sensing Proportioning Valve
MAX.	Maximum
MIC	Microphone
MIL	Malfunction Indicator Lamp
MIN.	Minimum
MP	Multipurpose
MPX	Multiplex Communication System
M/T	Manual Transmission
MT	Mount
MTG	Mounting
N	Neutral
NA	Natural Aspiration
No.	Number
O/D	Overdrive

OEM	Original Equipment Manufacturing
OHC	Overhead Camshaft
OHV	Overhead Valve
OPT	Option
O/S	Oversize
P & BV	Proportioning And Bypass Valve
PCS	Power Control System
PCV	Positive Crankcase Ventilation
PKB	Parking Brake
PPS	Progressive Power Steering
PS	Power Steering
PTO	Power Take-Off
R & P	Rack And Pinion
R/B	Relay Block
RBS	Recirculating Ball Type Steering
R/F	Reinforcement
RFS	Rigid Front Suspension
RRS	Rigid Rear Suspension
RH	Right-Hand
RHD	Right-Hand Drive
RLY	Relay
ROM	Read Only Memory
Rr	Rear
RR	Rear-Engine Rear-Wheel Drive
RWD	Rear-Wheel Drive
SDN	Sedan
SEN	Sensor
SICS	Starting Injection Control System
SOC	State Of Charge
SOHC	Single Overhead Camshaft
SPEC	Specification
SPI	Single Point Injection
SRS	Supplemental Restraint System
SSM	Special Service Materials
SST	Special Service Tools
STD	Standard
STJ	Cold-Start Fuel Injection
SW	Switch
SYS	System
T/A	Transaxle
TACH	Tachometer
TBI	Throttle Body Electronic Fuel Injection
TC	Turbocharger
TCCS	TOYOTA Computer-Controlled System
TCV	Timing Control Valve
TDC	Top Dead Center

TEMP.	Temperature
TEMS	TOYOTA Electronic Modulated Suspension
TIS	Total Information System For Vehicle Development
T/M	Transmission
TMC	TOYOTA Motor Corporation
TMMK	TOYOTA Motor Manufacturing Kentucky, Inc.
TRAC	Traction Control System
TURBO	Turbocharge
U/D	Underdrive
U/S	Undersize
VCV	Vacuum Control Valve
VENT	Ventilator
VIN	Vehicle Identification Number
VPS	Variable Power Steering
VSC	Vehicle Skid Control
VSV	Vacuum Switching Valve
VTV	Vacuum Transmitting Valve
w/	With
WGN	Wagon
W/H	Wire Harness
w/o	Without
1st	First
2nd	Second
2WD	Two Wheel Drive Vehicle (4x2)
4WD	Four Wheel Drive Vehicle (4x4)

IN0CI-02

GLOSSARY OF SAE AND TOYOTA TERMS

This glossary lists all SAE-J1930 terms and abbreviations used in this manual in compliance with SAE recommendations, as well as their TOYOTA equivalents.

SAE ABBREVIATIONS	SAE TERMS	TOYOTA TERMS ( )--ABBREVIATIONS
A/C	Air Conditioning	Air Conditioner
ACL	Air Cleaner	Air Cleaner, A/CL
AIR	Secondary Air Injection	Air Injection (AI)
AP	Accelerator Pedal	-
B+	Battery Positive Voltage	+B, Battery Voltage
BARO	Barometric Pressure	HAC
CAC	Charge Air Cooler	Intercooler
CARB	Carburetor	Carburetor
CFI	Continuous Fuel Injection	-
CKP	Crankshaft Position	Crank Angle
CL	Closed Loop	Closed Loop
CMP	Camshaft Position	Cam Angle
CPP	Clutch Pedal Position	-
CTOX	Continuous Trap Oxidizer	-
CTP	Closed Throttle Position	LL ON, Idle ON
DFI	Direct Fuel Injection (Diesel)	Direct Injection (DI)
DI	Distributor Ignition	-
DLC1 DLC2 DLC3	Data Link Connector 1 Data Link Connector 2 Data Link Connector 3	1: Check Connector 2: Total Diagnosis Comunication Link (TDCL) 3: OBD II Diagnostic Connector
DTC	Diagnostic Trouble Code	Diagnostic Code
DTM	Diagnostic Test Mode	-
ECL	Engine Control Level	-
ECM	Engine Control Module	Engine ECU (Electronic Control Unit)
ECT	Engine Coolant Temperature	Coolant Temperature, Water Temperature (THW)
EEPROM	Electrically Erasable Programmable Read Only Memory	Electrically Erasable Programmable Read Only Memory (EEPROM), Erasable Programmable Read Only Memory (EPROM)
EFE	Early Fuel Evaporation	Cold Mixture Heater (CMH), Heat Control Valve (HCV)
EGR	Exhaust Gas Recirculation	Exhaust Gas Recirculation (EGR)
EI	Electronic Ignition	TOYOTA Distributorless Ignition (TDI)
EM	Engine Modification	Engine Modification (EM)
EPROM	Erasable Programmable Read Only Memory	Programmable Read Only Memory (PROM)
EVAP	Evaporative Emission	Evaporative Emission Control (EVAP)
FC	Fan Control	-
FEEPROM	Flash Electrically Erasable Programmable Read Only Memory	-
FEPROM	Flash Erasable Programmable Read Only Memory	-
FF	Flexible Fuel	-
FP	Fuel Pump	Fuel Pump
GEN	Generator	Alternator
GND	Ground	Ground (GND)

HO2S	Heated Oxygen Sensor	Heated Oxygen Sensor (HO_2S)
IAC	Idle Air Control	Idle Speed Control (ISC)
IAT	Intake Air Temperature	Intake or Inlet Air Temperature
ICM	Ignition Control Module	-
IFI	Indirect Fuel Injection	Indirect Injection (IDL)
IFS	Inertia Fuel-Shutoff	-
ISC	Idle Speed Control	-
KS	Knock Sensor	Knock Sensor
MAF	Mass Air Flow	Air Flow Meter
MAP	Manifold Absolute Pressure	Manifold Pressure Intake Vacuum
MC	Mixture Control	Electric Bleed Air Control Valve (EBCV) Mixture Control Valve (MCV) Electric Air Control Valve (EACV)
MDP	Manifold Differential Pressure	-
MFI	Multiport Fuel Injection	Electronic Fuel Injection (EFI)
MIL	Malfunction Indicator Lamp	Check Engine Lamp
MST	Manifold Surface Temperature	-
MVZ	Manifold Vacuum Zone	-
NVRAM	Non-Volatile Random Access Memory	-
O2S	Oxygen Sensor	Oxygen Sensor, O_2 Sensor (O_2S)
OBD	On-Board Diagnostic	On-Board Diagnostic System (OBD)
OC	Oxidation Catalytic Converter	Oxidation Catalyst Convert (OC), CCo
OP	Open Loop	Open Loop
PAIR	Pulsed Secondary Air Injection	Air Suction (AS)
PCM	Powertrain Control Module	-
PNP	Park/Neutral Position	-
PROM	Programmable Read Only Memory	-
PSP	Power Steering Pressure	-
PTOX	Periodic Trap Oxidizer	Diesel Particulate Filter (DPF) Diesel Particulate Trap (DPT)
RAM	Random Access Memory	Random Access Memory (RAM)
RM	Relay Module	-
ROM	Read Only Memory	Read Only Memory (ROM)
RPM	Engine Speed	Engine Speed
SC	Supercharger	Supercharger
SCB	Supercharger Bypass	E-ABV
SFI	Sequential Multiport Fuel Injection	Electronic Fuel Injection (EFI), Sequential Injection
SPL	Smoke Puff Limiter	-
SRI	Service Reminder Indicator	-
SRT	System Readiness Test	-
ST	Scan Tool	-
TB	Throttle Body	Throttle Body
TBI	Throttle Body Fuel Injection	Single Point Injection Central Fuel Injection (Ci)
TC	Turbocharger	Turbocharger
TCC	Torque Converter Clutch	Torque Converter

TCM	Transmission Control Module	Transmission ECU, ECT ECU
TP	Throttle Position	Throttle Position
TR	Transmission Range	-
TVV	Thermal Vacuum Valve	Bimetallic Vacuum Switching Valve (BVSV) Thermostatic Vacuum Switching Valve (TVSV)
TWC	Three-Way Catalytic Converter	Three-Way Catalytic (TWC) Manifold Converter CC_{RO}
TWC+OC	Three-Way + Oxidation Catalytic Converter	CC_R + CCo
VAF	Volume Air Flow	Air Flow Meter
VR	Voltage Regulator	Voltage Regulator
VSS	Vehicle Speed Sensor	Vehicle Speed Sensor
WOT	Wide Open Throttle	Full Throttle
WU-OC	Warm Up Oxidation Catalytic Converter	-
WU-TWC	Warm Up Three-Way Catalytic Converter	-
3GR	Third Gear	-
4GR	Fourth Gear	-

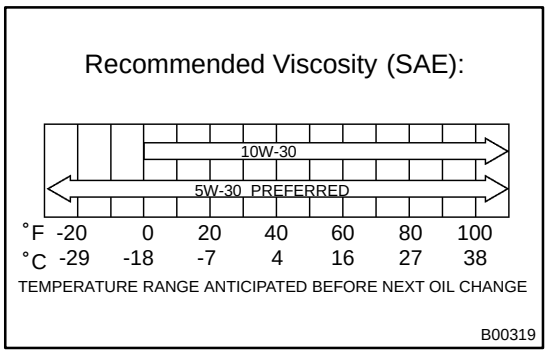

OIL AND FILTER

LU0G0-02

INSPECTION

1. CHECK ENGINE OIL QUALITY

Check the oil for deterioration, entry of water, discoloring or thinning.

If the quality is visibly poor, replace the oil.

Oil grade:

API grade SJ, Energy-Conserving or ILSAC multi-grade engine oil.

SAE 5W - 30 is the best choice for your vehicle, for good fuel economy, and good starting in cold weather.

2. CHECK ENGINE OIL LEVEL

After warm up the engine and then 5 minutes after the engine stop, oil level should be between the low level and full level marks on the dipstick.

If low, check for leakage and add oil up to the full level mark.

NOTICE:

Do not fill with engine oil above the full level mark.

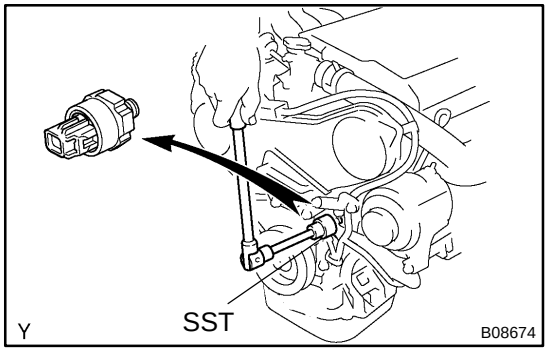

3. REMOVE OIL PRESSURE SWITCH, AND INSTALL OIL PRESSURE GAUGE

(a) Using SST, remove the oil pressure switch.
SST 09816-30010

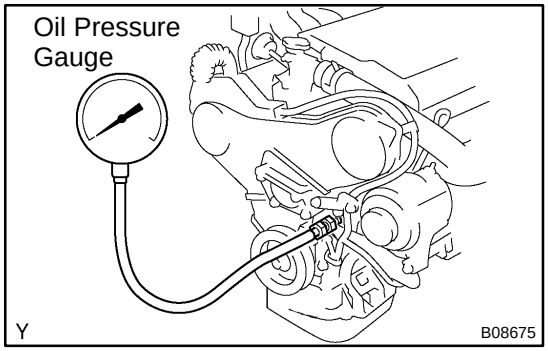

(b) Install the oil pressure gauge.

4. WARM UP ENGINE

Allow the engine to warm up to normal operating temperature.

5. CHECK OIL PRESSURE

Oil pressure:

At idle	29 kPa (0.3 kgf/cm^2, 4.3 psi) or more
At 3,000 rpm	294 - 539 kPa (3.0 - 5.5 kgf/cm^2, 43 - 78 psi)

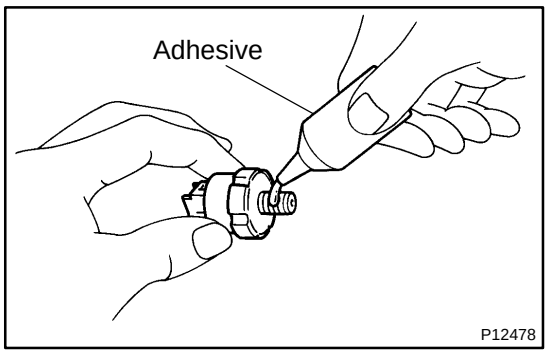

6. REMOVE OIL PRESSURE GAUGE AND REINSTALL OIL PRESSURE SWITCH

(a) Remove the oil pressure gauge.

(b) Apply adhesive to 2 or 3 threads of the oil pressure switch.
Adhesive: Part No. 08833-00080, THREE BOND 1344, LOCTITE 242 or equivalent

(c) Using SST, install the oil pressure switch.
SST 09816-30010
Torque: 13 N·m (130 kgf·cm, 9 ft·lbf)

7. START ENGINE AND CHECK FOR LEAKS

LU01Q-03

REPLACEMENT

CAUTION:

- ★ **Prolonged and repeated contact with mineral oil will result in the removal of natural fats from the skin, leading to dryness, irritation and dermatitis. In addition, used engine oil contains potentially harmful contaminants which may cause skin cancer.**
- ★ **Exercise caution in order to minimize the length and frequency of contact of your skin to used oil. Wear protective clothing and gloves. Wash your skin thoroughly with soap and water, or use water-less hand cleaner, to remove any used engine oil. Do not use gasoline, thinners, or solvents.**
- ★ **In order to preserve the environment, used oil and used oil filter must be disposed of only at designated disposal sites.**

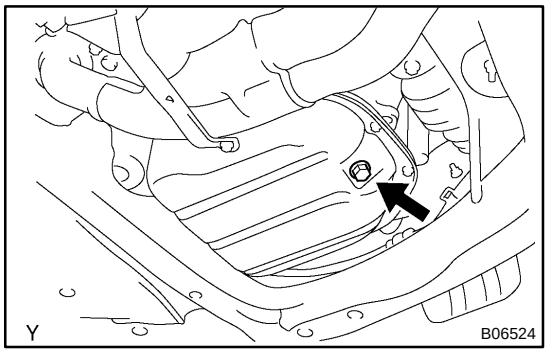

1. DRAIN ENGINE OIL

(a) Remove the oil filler cap.

(b) Remove the oil drain plug, and drain the oil into a container.

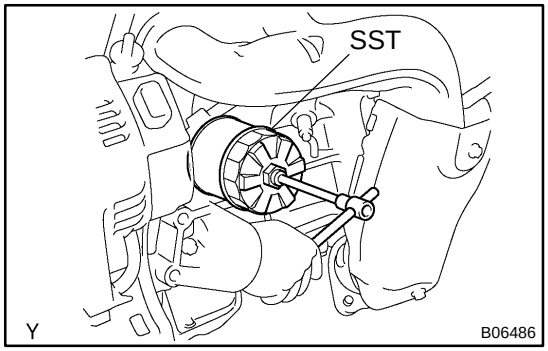

2. REPLACE OIL FILTER

(a) Using SST, remove the oil filter.
SST 09228-07501

(b) Check and clean the oil filter installation surface.

(c) Apply clean engine oil to the gasket of a new oil filter.

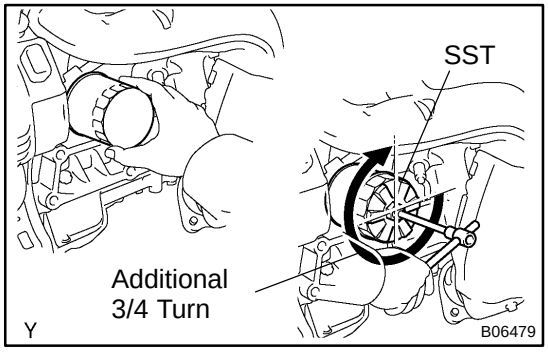

(d) Lightly screw the oil filter into place, and tighten it until the gasket contacts the seat.

(e) Using SST, tighten it an additional 3/4 turn.
SST 09228-07501

3. REFILL WITH ENGINE OIL

(a) Clean and install the oil drain plug with a new gasket.
Torque: 45 N·m (460 kgf·cm, 33 ft·lbf)

(b) Fill with fresh engine oil.
Capacity:

Drain and refill	w/ Oilfilter change	4.7 liters (5.0 US qts, 4.1 lmp. qts)
	w/o Oilfilter change	4.5 liters (4.8 US qts, 4.0 lmp. qts)
Dry fill		5.2 liters (5.5 US qts, 4.6 lmp. qts)

(c) Install the oil filler cap.

4. START ENGINE AND CHECK FOR OIL LEAKS

5. RECHECK ENGINE OIL LEVEL

OIL PUMP

COMPONENTS

LU01R-04

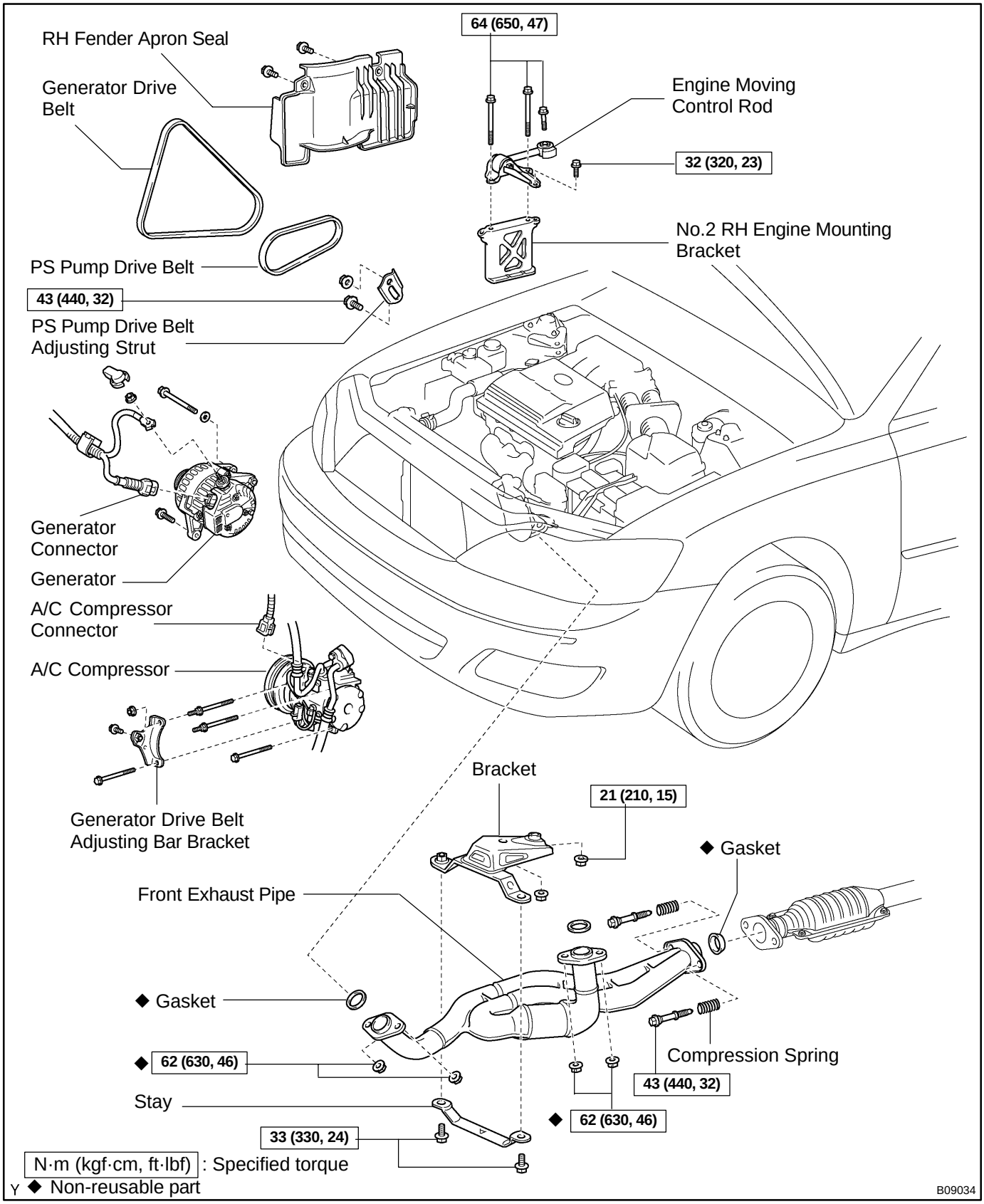

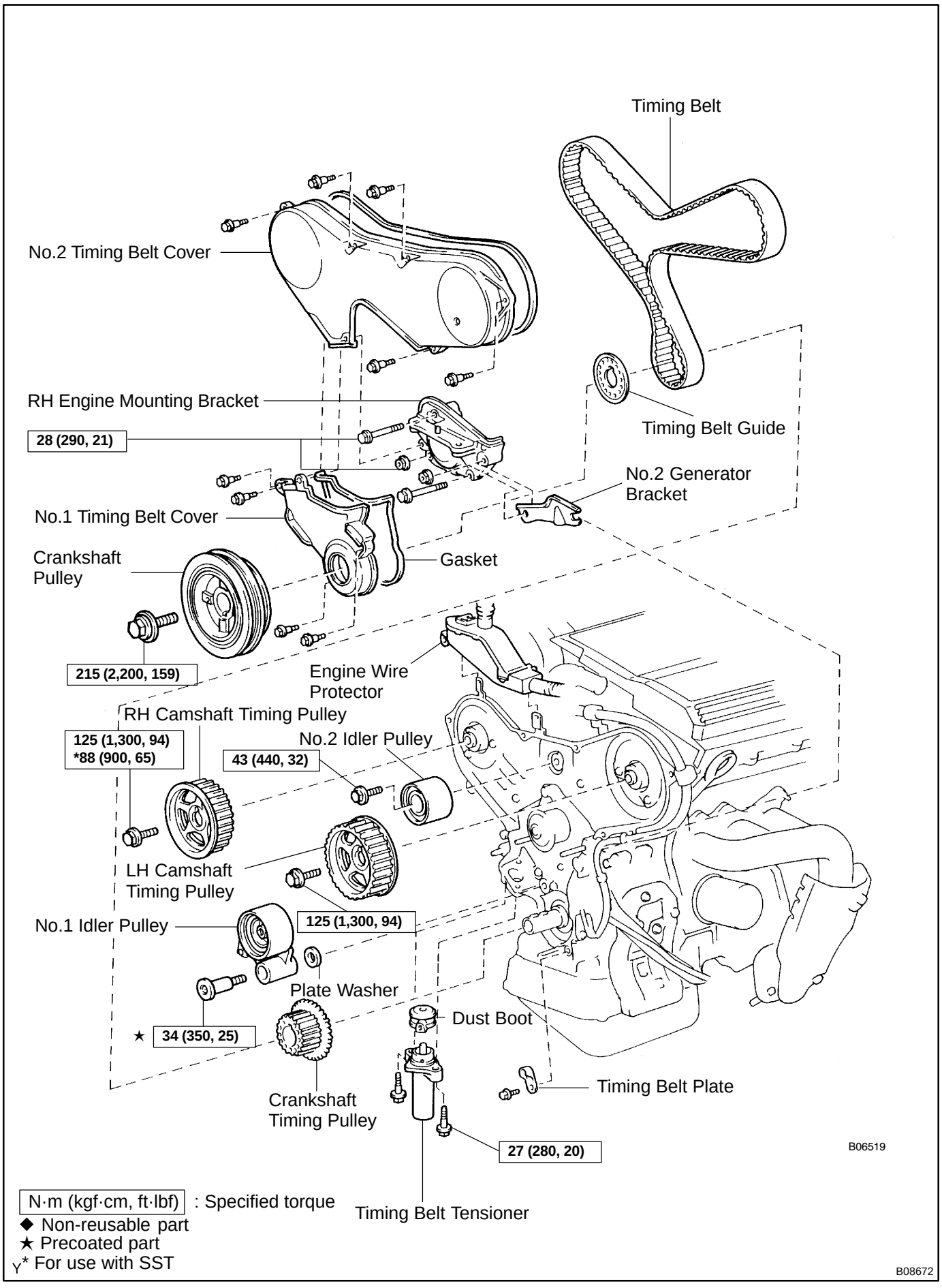
Timing Belt
No.2 Timing Belt Cover
RH Engine Mounting Bracket
28 (290, 21)
Timing Belt Guide
No.2 Generator Bracket
No.1 Timing Belt Cover
Gasket
Crankshaft Pulley
215 (2,200, 159)
Engine Wire Protector
RH Camshaft Timing Pulley
125 (1,300, 94)
*88 (900, 65)
No.2 Idler Pulley
43 (440, 32)
LH Camshaft Timing Pulley
No.1 Idler Pulley
125 (1,300, 94)
Plate Washer
★ 34 (350, 25)
Dust Boot
Timing Belt Plate
Crankshaft Timing Pulley
27 (280, 20)
B06519
N·m (kgf·cm, ft·lbf) : Specified torque
◆ Non-reusable part
★ Precoated part
Y* For use with SST
Timing Belt Tensioner
B08672

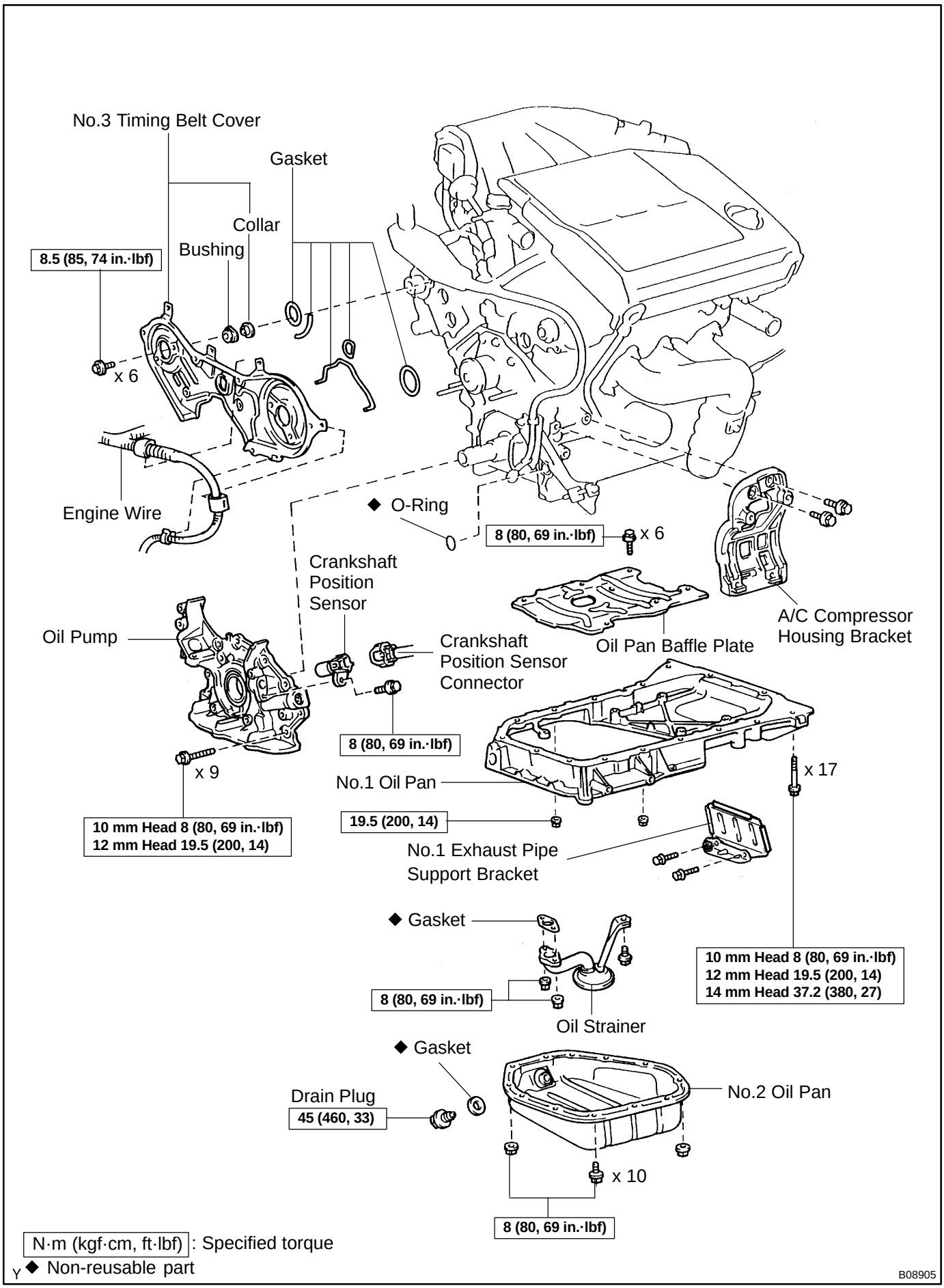
No.3 Timing Belt Cover
Gasket
Collar
Bushing
8.5 (85, 74 in.·lbf)
x 6
Engine Wire
◆ O-Ring
8 (80, 69 in.·lbf)
x 6
Crankshaft Position Sensor
Oil Pump
Crankshaft Position Sensor Connector
Oil Pan Baffle Plate
A/C Compressor Housing Bracket
8 (80, 69 in.·lbf)
x 9
10 mm Head 8 (80, 69 in.·lbf)
12 mm Head 19.5 (200, 14)
No.1 Oil Pan
19.5 (200, 14)
x 17
No.1 Exhaust Pipe Support Bracket
◆ Gasket
8 (80, 69 in.·lbf)
Oil Strainer
10 mm Head 8 (80, 69 in.·lbf)
12 mm Head 19.5 (200, 14)
14 mm Head 37.2 (380, 27)
◆ Gasket
Drain Plug
45 (460, 33)
No.2 Oil Pan
x 10
8 (80, 69 in.·lbf)
N·m (kgf·cm, ft·lbf): Specified torque
◆ Non-reusable part
B08905

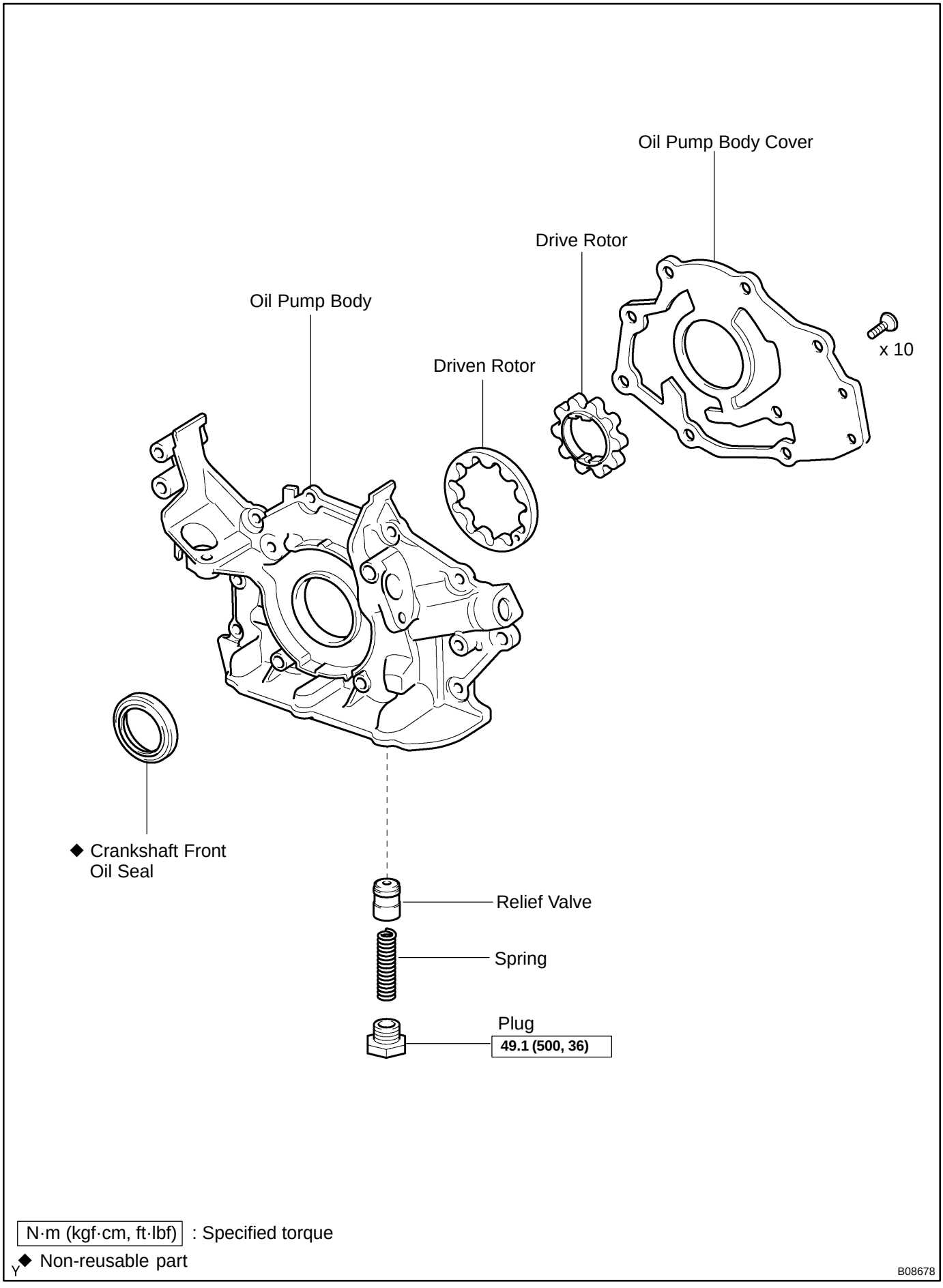
Oil Pump Body Cover
Drive Rotor
Oil Pump Body
x 10
Driven Rotor
◆ Crankshaft Front Oil Seal
Relief Valve
Spring
Plug
49.1 (500, 36)
N·m (kgf·cm, ft·lbf) : Specified torque
◆ Non-reusable part
B08678

LU01T-03

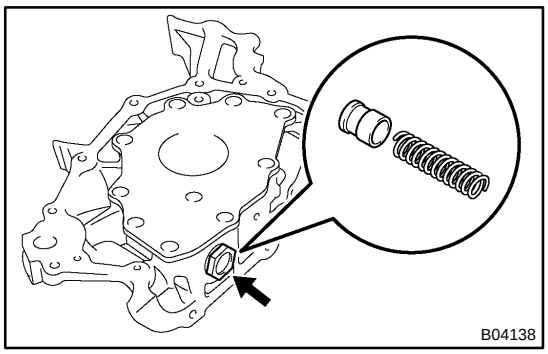

DISASSEMBLY

1. REMOVE RELIEF VALVE

Remove the plug, spring and relief valve.

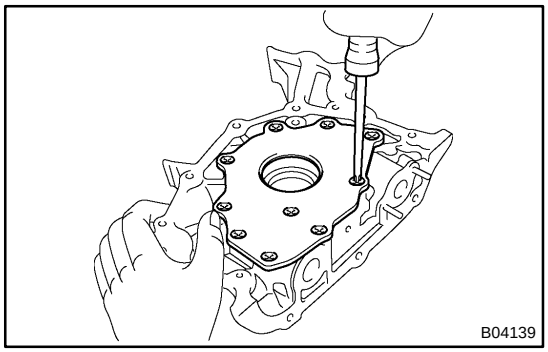

2. REMOVE DRIVE AND DRIVEN ROTORS

Remove the 10 screws, pump body cover, drive and driven rotors.

LU01U-03

INSPECTION

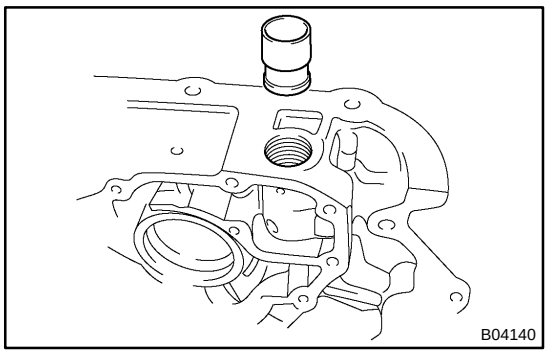

1. INSPECT RELIEF VALVE

Coat the valve with engine oil and check that it falls smoothly into the valve hole by its own weight.

If it does not, replace the relief valve. If necessary, replace the oil pump assembly.

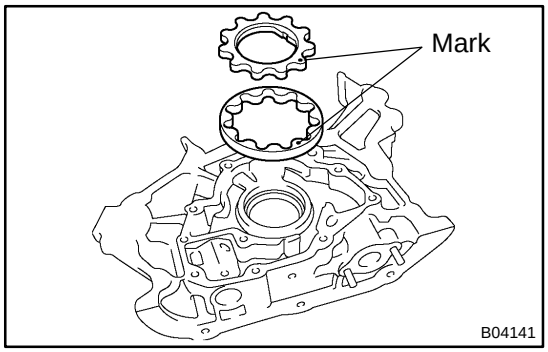

2. PLACE DRIVE AND DRIVEN ROTORS INTO OIL PUMP BODY

Place the drive and driven rotors into the oil pump body with the mark facing upward.

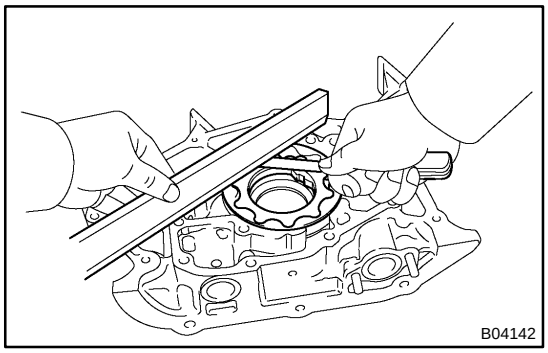

3. INSPECT ROTOR SIDE CLEARANCE

Using a feeler gauge and precision straight edge, measure the clearance between the rotors and precision straight edge.

Standard side clearance:
0.030 - 0.090 mm (0.0012 - 0.0035 in.)
Maximum side clearance: 0.15 mm (0.0059 in.)

If the side clearance is greater than maximum, replace the rotors as a set. If necessary, replace the oil pump assembly.

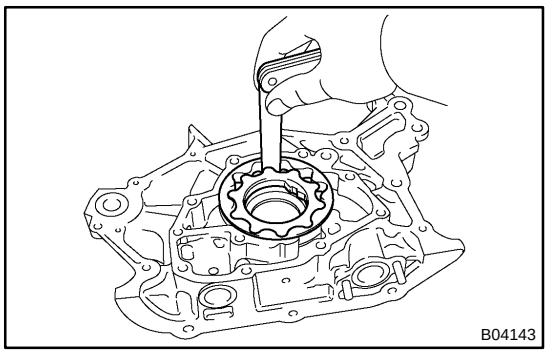

4. INSPECT ROTOR TIP CLEARANCE

Using a feeler gauge, measure the clearance between the drive and driven rotor tips.

Standard tip clearance:
0.110 - 0.240 mm (0.0043 - 0.0094 in.)
Maximum tip clearance: 0.35 mm (0.0138 in.)

If the tip clearance is greater than maximum, replace the rotors as a set.

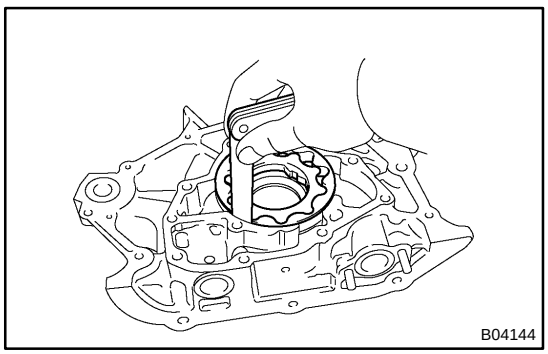

5. INSPECT ROTOR BODY CLEARANCE

Using a feeler gauge, measure the clearance between the driven rotor and body.

Standard body clearance:
0.250 - 0.325 mm (0.0098 - 0.0128 in.)
Maximum body clearance: 0.40 mm (0.0157 in.)

If the body clearance is greater than maximum, replace the rotors as a set. If necessary, replace the oil pump assembly.

LU0IC-01

INSTALLATION

1. INSTALL OIL PUMP

(a) Remove any old packing (FIPG) material and be careful not to drop any oil on the contact surfaces of the oil pump and cylinder block.

★ Using a razor blade and gasket scraper, remove all the old packing (FIPG) material from the gasket surfaces and sealing grooves.

★ Thoroughly clean all components to remove all the loose material.

★ Using a non-residue solvent, clean both sealing surfaces.

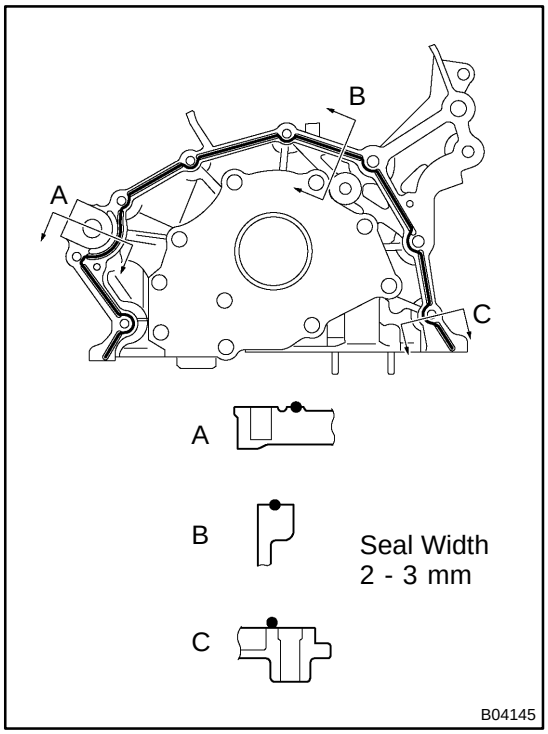

(b) Apply seal packing to the oil pump as shown in the illustration.

Seal packing: Part No. 08826-00080 or equivalent

★ Install a nozzle that has been cut to a 2 - 3 mm (0.08 - 0.12 in.) opening.

HINT:

Avoid applying an excessive amount to the surface.

★ Parts must be assembled within 3 minutes of application. Otherwise the material must be removed and reapplied.

★ Immediately remove nozzle from the tube and reinstall cap.

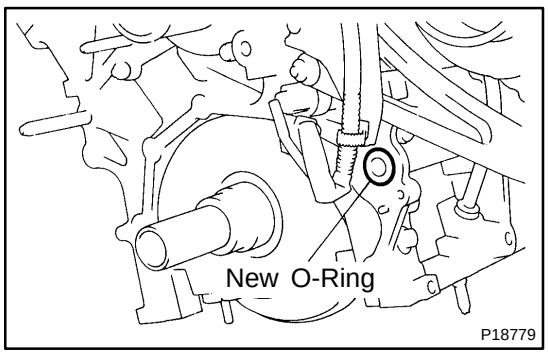

(c) Place a new O-ring on the cylinder block.

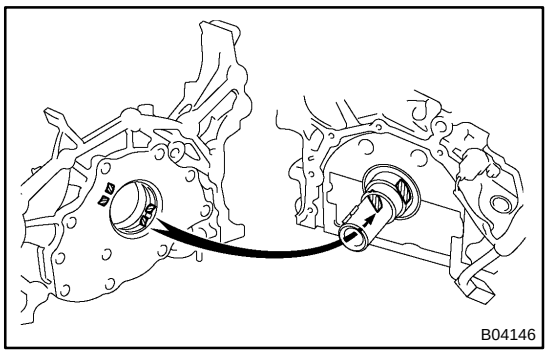

(d) Engage the spline teeth of the oil pump drive gear with the large teeth of the crankshaft, and slide the oil pump on the crankshaft.

(e) Install the oil pump with the 9 bolts. Uniformly tighten the bolts in several passes.

Torque:
10 mm head: 8 N·m (80 kgf·cm, 69 in.·lbf)
12 mm head: 19.5 N·m (200 kgf·cm, 14 ft·lbf)

2. INSTALL CRANKSHAFT POSITION SENSOR
Torque: 8 N·m (80 kgf·cm, 69 in.·lbf)

3. INSTALL BAFFLE PLATE TO NO.1 OIL PAN
Torque: 8 N·m (80 kgf·cm, 69 in.·lbf)

4. INSTALL NO.1 OIL PAN

(a) Remove any old packing (FIPG) material and be careful not to drop any oil on the contact surfaces of the oil pan, oil pump and cylinder block.

★ Using a razor blade and gasket scraper, remove all the old packing (FIPG) material from the gasket surfaces and sealing grooves.

★ Thoroughly clean all components to remove all the loose material.

★ Using a non-residue solvent, clean both sealing surfaces.

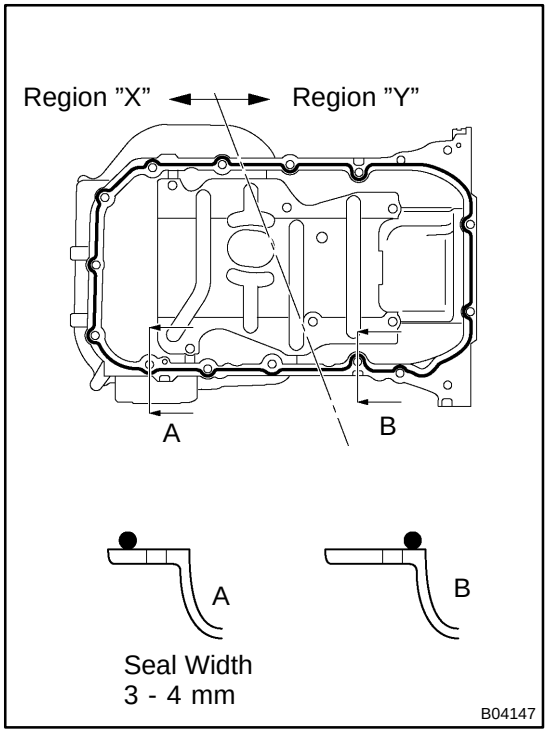

(b) Apply seal packing to the oil pan as shown in the illustration.

Seal packing: Part No. 08826-00080 or equivalent
Region "X" is at the outer side of the bolt hole.
Region "Y" is at the inner side of the bolt hole.

★ Install a nozzle that has been cut to a or 3 - 4 mm (0.12 - 0.16 in.) opening.

HINT:
Avoid applying an excessive amount to the surface.

★ Parts must be assembled within 3 minutes of application. Otherwise the material must be removed and reapplied.

★ Immediately remove nozzle from the tube and reinstall cap.

(c) Install the oil pan with the 17 bolts and 2 nuts. Uniformly tighten the bolts and nuts in several passes.

Torque:
10 mm head: 8 N·m (80 kgf·cm, 69 in.·lbf)
12 mm head: 19.5 N·m (200 kgf·cm, 14 ft·lbf)
14 mm head: 37.2 N·m (380 kgf·cm, 27 ft·lbf)

(d) Install the No.1 exhaust pipe support bracket with the 2 bolts.

Torque: 7.8 N·m (80 kgf·cm, 69 in.·lbf)

5. INSTALL OIL STRAINER

Install a new gasket and the oil strainer with the bolt and 2 nuts.

Torque: 8 N·m (80 kgf·cm, 69 in.·lbf)

6. INSTALL NO.2 OIL PAN

(a) Remove any old packing (FIPG) material and be careful not to drop any oil on the contact surface of the No.1 and No.2 oil pans.

★ Using a razor blade and gasket scraper, remove all the old packing (FIPG) material from the gasket surfaces and sealing grooves.

★ Thoroughly clean all components to remove all the loose material.

★ Using a non-residue solvent, clean both sealing surfaces.

NOTICE:

Do not use a solvent which will affect the painted surfaces.

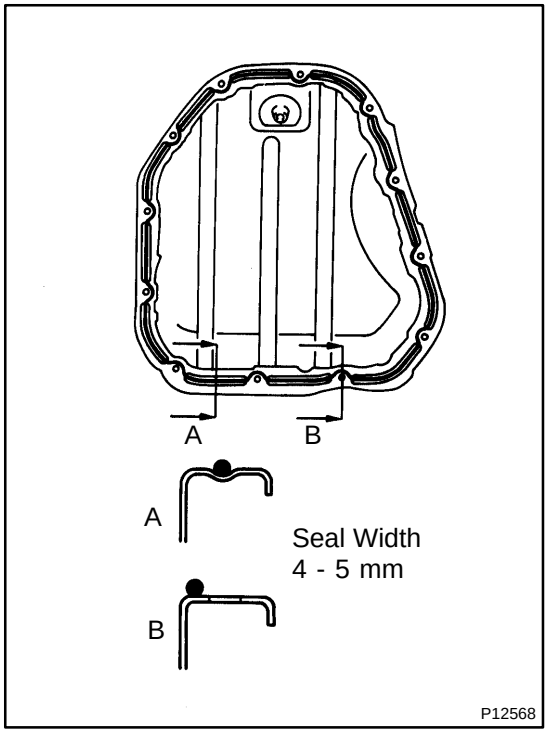

(b) Apply seal packing to the No.2 oil pan as shown in the illustration.

Seal packing: Part No. 08826-00080 or equivalent

★ Install a nozzle that has been cut to a 4 - 5 mm (0.16 - 0.20 in.) opening.

HINT:

Avoid applying an excessive amount to the surface.

★ Parts must be assembled within 3 minutes of application. Otherwise the material must be removed and reapplied.

★ Immediately remove nozzle from the tube and reinstall cap.

(c) Install the No.2 oil pan with the 10 bolts and 2 nuts. Uniformly tighten the bolts and nuts in several passes.

Torque: 8 N·m (80 kgf·cm, 69 in.·lbf)

7. INSTALL TIMING PULLEYS (See page EM-21)

8. INSTALL TIMING BELT (See page EM-21)

9. INSTALL ADJUSTING STRUT AND PS PUMP DRIVE BELT

(a) Temporarily install the adjusting strut with the bolt and nut.

(b) Install the drive belt with the pivot and adjusting bolts.
Torque: 43.1 N·m (440 kgf·cm, 32 ft·lbf)

(c) Tighten the nut.
Torque: 43.1 N·m (440 kgf·cm, 32 ft·lbf)

10. INSTALL A/C COMPRESSOR (See page EM-77)

11. INSTALL GENERATOR (See page CH-1)

12. INSTALL RH FENDER APRON SEAL

13. INSTALL FRONT EXHAUST PIPE (See page EM-77)

14. INSTALL RH FRONT WHEEL

15. FILL ENGINE WITH OIL

16. START ENGINE AND CHECK FOR LEAKS

17. RECHECK ENGINE OIL LEVEL

LU01W-03

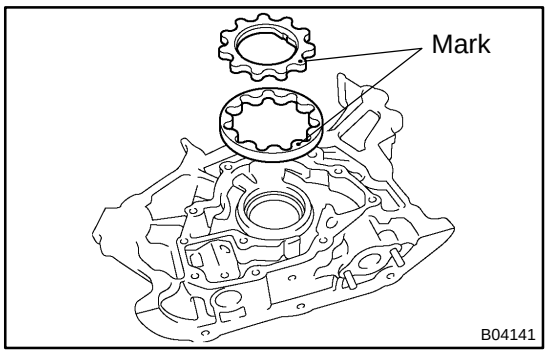

REASSEMBLY

1. INSTALL DRIVE AND DRIVEN ROTORS

(a) Place the drive and driven rotors into pump body with the marks facing the pump body cover side.

(b) Install the pump body cover with the 10 screws.

2. INSTALL RELIEF VALVE

Insert the relief valve and spring into the pump body hole, and install the plug.

Torque: 49.1 N·m (500 kgf·cm, 36 ft·lbf)

LU0IB-01

REMOVAL

HINT:

When repairing the oil pump, the oil pan and strainer should be removed and cleaned.

1. **DRAIN ENGINE OIL**
2. **REMOVE RH FRONT WHEEL**
3. **REMOVE RH FENDER APRON SEAL**
4. **REMOVE FRONT EXHAUST PIPE**
   (See page EM-72)
5. **REMOVE GENERATOR FROM ENGINE**
   (See page CH-6)
6. **REMOVE A/C COMPRESSOR FROM ENGINE**
   (See page EM-72)

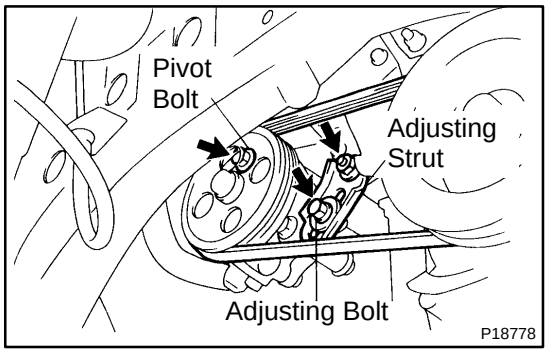

7. **REMOVE PS PUMP DRIVE BELT AND ADJUSTING STRUT**

(a) Loosen the pivot and adjusting bolts, and remove the drive belt.

(b) Remove the bolt, nut and adjusting strut.

8. **REMOVE TIMING BELT (See page EM-15)**
9. **REMOVE TIMING PULLEYS (See page EM-15)**
10. **REMOVE NO.3 TIMING BELT COVER**
    (See page EM-31)

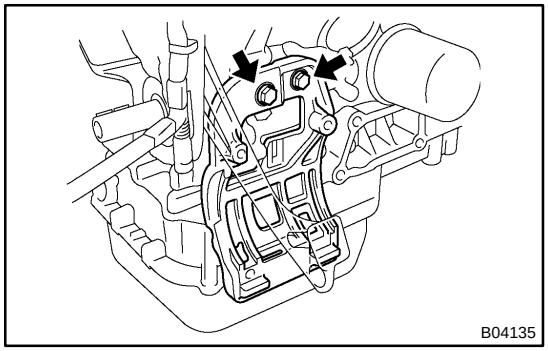

11. **REMOVE A/C COMPRESSOR HOUSING BRACKET**

Remove the 2 bolts and housing bracket.

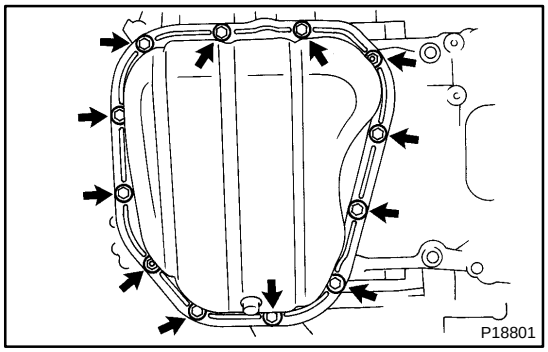

12. **REMOVE NO.2 OIL PAN**

(a) Remove the 10 bolts and 2 nuts.

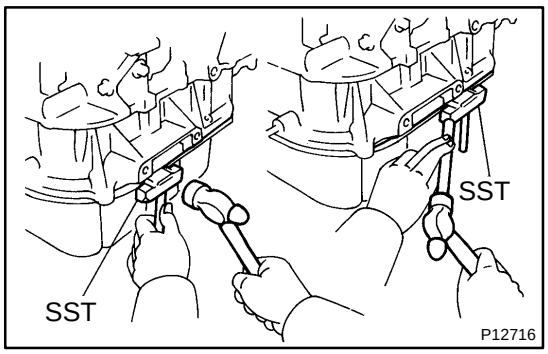

(b) Insert the blade of SST between the No.1 and No.2 oil pans, and cut off applied sealer and remove the No.1 oil pan.
SST 09032-00100

NOTICE:

★ **Be careful not to the damage the No.2 oil pan contact surface of the No.1 oil pan.**

★ **Be careful not to damage the No.2 oil pan flange.**

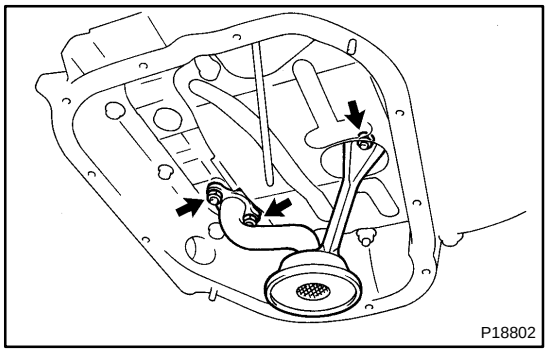

13. REMOVE OIL STRAINER

Remove the bolt, 2 nuts, oil strainer and gasket.

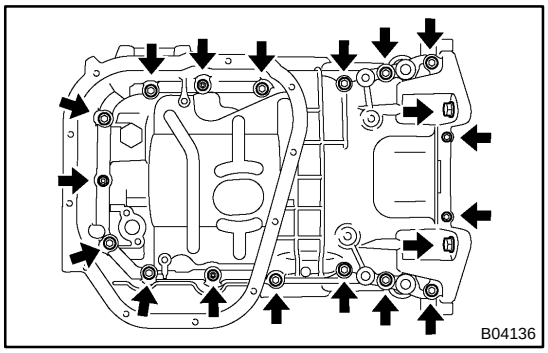

14. REMOVE NO.1 OIL PAN

(a) Remove the 2 bolts and No.1 exhaust pipe support bracket.

(b) Remove the 17 bolts and 2 nuts.

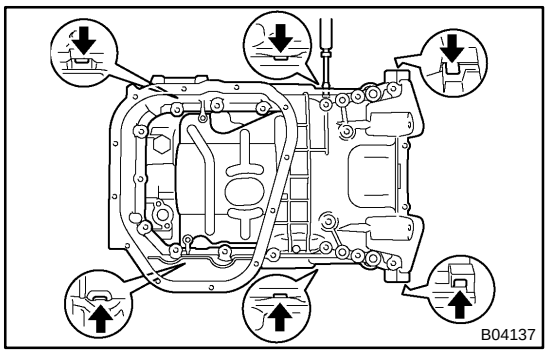

(c) Using a screwdriver, remove the oil pan by prying the portions between the cylinder block and oil pan.

NOTICE:

Be careful not to damage the contact surfaces of the cylinder block and oil pan.

15. REMOVE BAFFLE PLATE FROM NO.1 OIL PAN

16. REMOVE CRANKSHAFT POSITION SENSOR

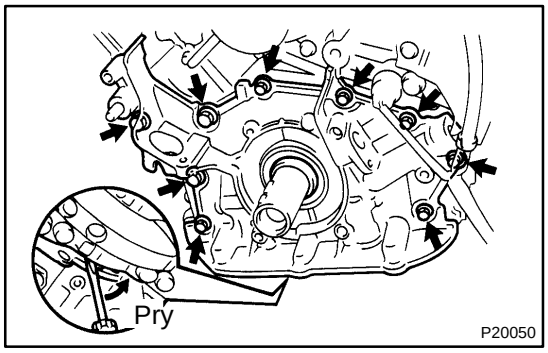

17. REMOVE OIL PUMP

(a) Remove the 9 bolts.

(b) Remove the oil pump by prying a screwdriver between the oil pump and main bearing cap.

(c) Remove the O-ring.

LU01V-03

REPLACEMENT

REPLACE CRANKSHAFT FRONT OIL SEAL

HINT:

There are 2 methods ((a) and (b)) to replace the oil seal which are as follows:

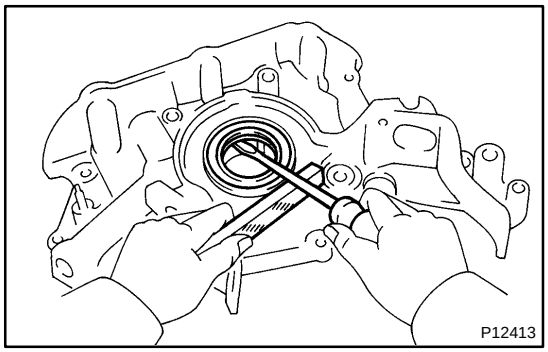

(a) If the oil pump is removed from the cylinder block.
  (1) Using a screwdriver, pry out the oil seal.

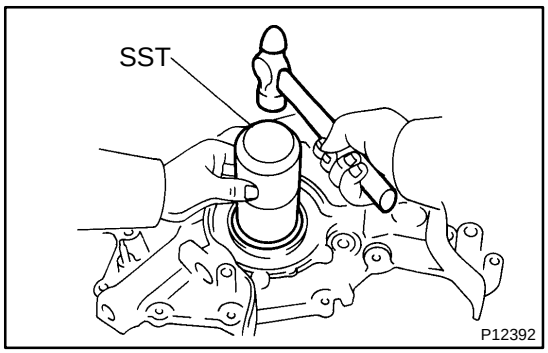

  (2) Using SST and a hammer, tap in a new oil seal until its surface is flush with the oil pump body edge.

SST 09223-00010

  (3) Apply MP grease to the oil seal lip.

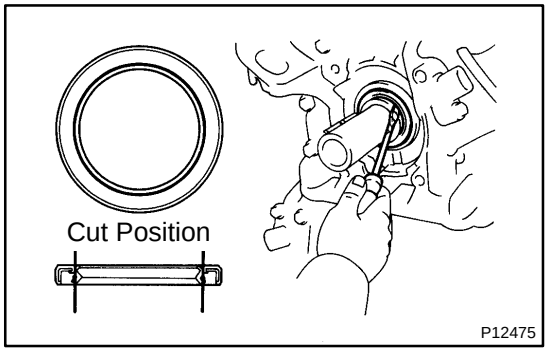

(b) If the oil pump is installed to the cylinder block.
  (1) Using a knife, cut off the oil seal lip.
  (2) Using a screwdriver, pry out the oil seal.

NOTICE:

Be careful not to damage the crankshaft. Tape the screwdriver tip.

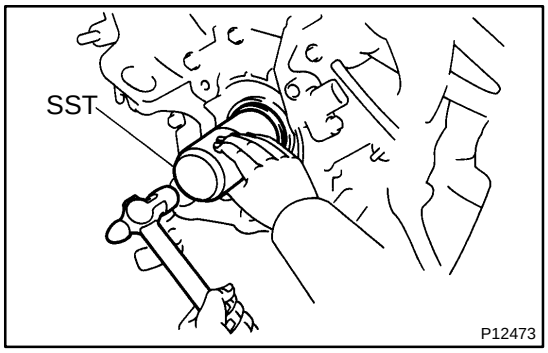

  (3) Apply MP grease to a new oil seal lip.
  (4) Using SST and a hammer, tap in the oil seal until its surface is flush with the oil pump body edge.

SST 09223-00010

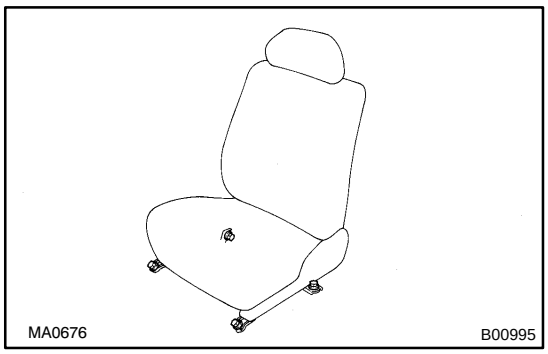

BODY

INSPECTION

MA01P-02

1. TIGHTEN BOLTS AND NUTS ON CHASSIS AND BODY

Tighten the following parts:

- Front seat mount bolts

Torque: 37 N·m (375 kgf·cm, 27 ft·lbf)

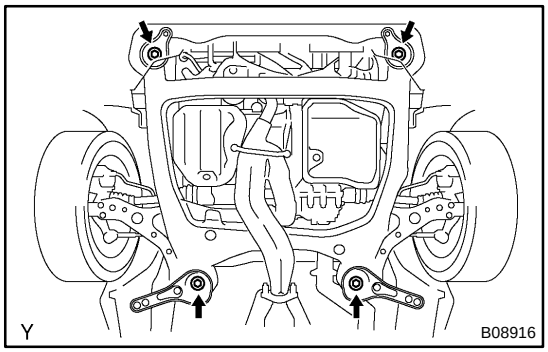

- Front suspension member-to-body mounting bolts

Torque: 181 N·m (1,850 kgf·cm, 134 ft·lbf)

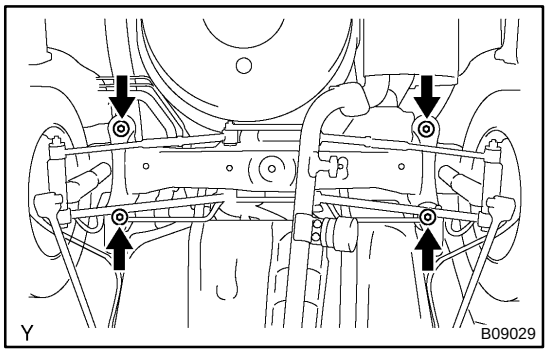

- Rear suspension member-to-body mounting nuts

Torque: 51 N·m (520 kgf·cm, 38 ft·lbf)

2. FINAL INSPECTION

(a) Check the operation of the body parts:

- Hood:
  Auxiliary catch operates properly
  Hood locks securely when closed
- Front and rear doors:
  Door lock operates properly
  Doors close properly
- Luggage compartment door:
  Door lock operates properly
- Seats:
  Seat adjusts easily and locks securely in any position
  Front seat back locks securely in any position
  Folding-down rear seat backs lock securely

(b) Road test:

- Check the engine and chassis for abnormal noises.
- Check that the vehicle dose not wander or pull to one side.
- Check that the brakes work properly and do not drag.
- Do setting of the parking brake shoes and drum.

(c) Be sure to deliver a clean car and especially check:

- Steering wheel
- Shift lever knob
- All switch knobs
- Door handles
- Seats

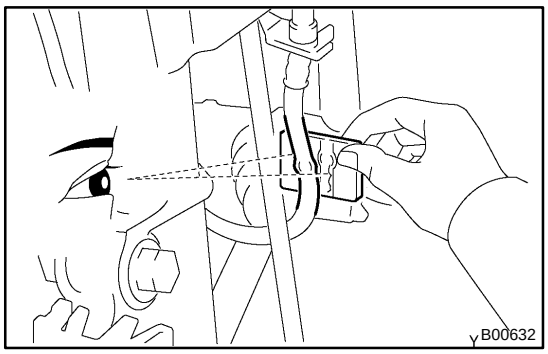

BRAKE

MA01N-01

INSPECTION

1. INSPECT BRAKE LINE PIPES AND HOSES

HINT:

Check in a well lighted area. Check the entire circumference and length of the brake hoses using a mirror as required. Turn the front wheels fully right or left before checking the front brake.

(a) Check all brake lines and hoses for:
- Damage
- Wear
- Deformation
- Cracks
- Corrosion
- Leaks
- Bends
- Twists

(b) Check all clamps for tightness and connections for leakage.

(c) Check that the hoses and lines are clear of sharp edges, moving parts and the exhaust system.

(d) Check that the lines installed in grommets pass through the center of the grommets.

2. INSPECT FRONT BRAKE PADS AND DISCS
(See page BR-26)

3. INSPECT REAR BRAKE PADS AND DISCS
(See page BR-35)

4. INSPECT PARKING BRAKE LININGS AND DRUMS
(See page BR-45)

CHASSIS

MA01O-02

INSPECTION

1. INSPECT STEERING LINKAGE

(a) Check the steering wheel free-play (See page SR-8).

(b) Check the steering linkage for looseness or damage.

Check that:

- Tie rod ends do not have excessive play.
- Dust seals and boots are not damaged.
- Boot clamps are not loose.

2. INSPECT SRS AIRBAG (See pages RS-15 , RS-30)

3. INSPECT STEERING GEAR HOUSING OIL

Check the steering gear housing for oil leakage.

4. INSPECT DRIVE SHAFT BOOTS

Check the drive shaft boots for clamp looseness, leakage or damage.

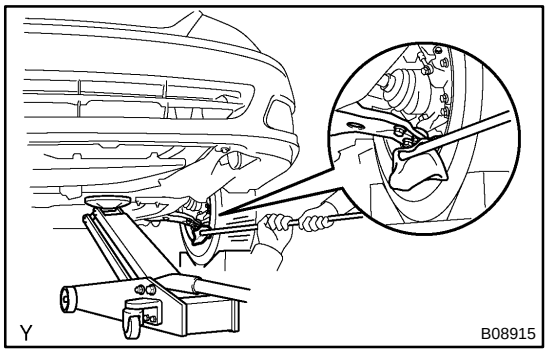

5. INSPECT BALL JOINTS AND DUST COVERS

(a) Inspect the ball joints for excessive looseness.

- Jack up the front of the vehicle and place wooden blocks with a height of 180 - 200 mm (7.09 - 7.87 in.) under the front tires.
- Lower the jack until there is about half a load on the front coil spring. Place stands under the vehicle for safety.
- Check that the front wheels are pointing straight ahead, and block them with chocks.
- Using a lever, pry up the end of the lower arm, and check the amount of play.

Maximum ball joint vertical play: 0 mm (0 in.)

If there is play, replace the ball joint.

(b) Check the dust cover for damage.

6. CHECK TRANSAXLE FLUID

Visually check the transaxle for fluid leakage.

If leakage is found, check for the cause and repair.

7. REPLACE TRANSAXLE FLUID (See page DI-160)

ENGINE

MA01M-02

INSPECTION

HINT:

Inspect these items when the engine is cold.

1. **REPLACE TIMING BELT (See page EM-15)**
2. **INSPECT DRIVE BELTS (See pages CH-1 , SR-3 and AC-17)**
3. **REPLACE SPARK PLUGS (See page IG-1)**

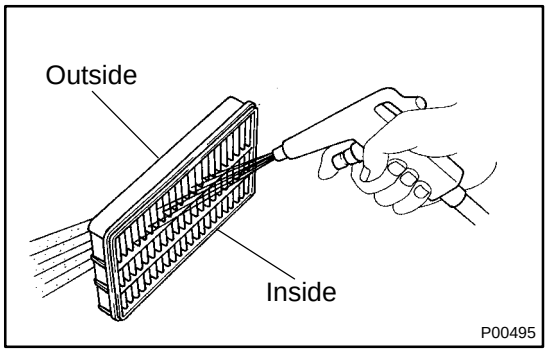

4. **INSPECT AIR FILTER**

(a) Visually check that the air filter is not excessively dirty or oily.

(b) Clean the air filter with compressed air.
First blow from the inside thoroughly, then blow off the outside of the air filter.

5. **REPLACE AIR FILTER**

Replace the air filter with a new one.

6. **REPLACE ENGINE OIL AND OIL FILTER (See page LU-3)**
7. **REPLACE ENGINE COOLANT (See page CO-2)**
8. **REPLACE GASKET IN FUEL TANK CAP (See page EC-6)**
9. **INSPECT FUEL LINES AND CONNECTIONS (See page EC-6)**
10. **INSPECT EXHAUST PIPES AND MOUNTINGS (See page EC-14)**
11. **ADJUST VALVE CLEARANCE (See page EM-4)**

INSIDE VEHICLE

MA002-16

GENERAL MAINTENANCE

These are maintenance and inspection items which are considered to be the owner's responsibility. They can be done by the owner or they can have them done at a service shop.
These items include those which should be checked on a daily basis, those which, in most cases, do not require (special) tools and those which are considered to be reasonable for the owner to do.
Items and procedures for general maintenance are as follows.

1. GENERAL NOTES

- Maintenance items may vary from country to country. Check the owner's manual supplement in which the maintenance schedule is shown.
- Every service item in the periodic maintenance schedule must be performed.
- Periodic maintenance service must be performed according to whichever interval in the periodic maintenance schedule occurs first, the odometer reading (miles) or the time interval (months).
- Maintenance service after the last period should be performed at the same interval as before unless otherwise noted.
- Failure to do even one item an cause the engine to run poorly and increase exhaust emissions.

2. LIGHTS

(a) Check that the headlights, stop lights, taillights, turn signal lights, and other lights are all working.
(b) Check the headlight aim.

3. WARNING LIGHTS AND BUZZERS

Check that all warning lights and buzzers function properly.

4. HORN

Check that it is working.

5. WINDSHIELD GLASS

Check for scratches, pits or abrasions.

6. WINDSHIELD WIPER AND WASHER

(a) Check operation of the wipers and washer.
(b) Check that the wipers do not streak.

7. WINDSHIELD DEFROSTER

Check that air comes out from the defroster outlet when operating the heater or air conditioner at defroster mode.

8. REAR VIEW MIRROR

Check that it is mounted securely.

9. SUN VISORS

Check that they move freely and are mounted securely.

10. STEERING WHEEL

Check that it has the specified free-play. Be alert for changes in steering condition, such as hard steering, excessive free-play or strange noises.

11. SEATS

(a) Check that the seat adjusters operate smoothly.
(b) Check that all latches lock securely in any position.
(c) Check that the head restraints move up and down smoothly and that the locks hold securely in any latch position.
(d) For fold-down seat backs, check that the latches lock securely.

12. SEAT BELTS

(a) Check that the seat belt system such as the buckles, retractors and anchors operate properly and smoothly.
(b) Check that the belt webbing is not cut, frayed, worn or damaged.

13. ACCELERATOR PEDAL

Check the pedal for smooth operation and uneven pedal effort or catching.

14. BRAKE PEDAL (See page BR-6)

(a) Check the pedal for smooth operation.

(b) Check that the pedal has the proper reserve distance and free-play.

(c) Check the brake booster function.

15. BRAKES

At a safe place, check that the brakes do not pull to one side when applied.

16. PARKING BRAKE (See page BR-9)

(a) Check that the parking brake pedal has the proper travel.

(b) On a safe incline, check that the vehicle is held securely with only the parking brake applied.

17. AUTOMATIC TRANSMISSION ”PARK” MECHANISM

(a) Check the lock release mechanism of the selector lever for proper and smooth operation.

(b) On a safe incline, check that the vehicle is held securely with the selector lever in ”P” position and all brakes released.

INSIDE VEHICLE

MA002-16

GENERAL MAINTENANCE

These are maintenance and inspection items which are considered to be the owner's responsibility. They can be done by the owner or they can have them done at a service shop.
These items include those which should be checked on a daily basis, those which, in most cases, do not require (special) tools and those which are considered to be reasonable for the owner to do.
Items and procedures for general maintenance are as follows.

1. GENERAL NOTES

- Maintenance items may vary from country to country. Check the owner's manual supplement in which the maintenance schedule is shown.
- Every service item in the periodic maintenance schedule must be performed.
- Periodic maintenance service must be performed according to whichever interval in the periodic maintenance schedule occurs first, the odometer reading (miles) or the time interval (months).
- Maintenance service after the last period should be performed at the same interval as before unless otherwise noted.
- Failure to do even one item an cause the engine to run poorly and increase exhaust emissions.

2. LIGHTS

(a) Check that the headlights, stop lights, taillights, turn signal lights, and other lights are all working.
(b) Check the headlight aim.

3. WARNING LIGHTS AND BUZZERS

Check that all warning lights and buzzers function properly.

4. HORN

Check that it is working.

5. WINDSHIELD GLASS

Check for scratches, pits or abrasions.

6. WINDSHIELD WIPER AND WASHER

(a) Check operation of the wipers and washer.
(b) Check that the wipers do not streak.

7. WINDSHIELD DEFROSTER

Check that air comes out from the defroster outlet when operating the heater or air conditioner at defroster mode.

8. REAR VIEW MIRROR

Check that it is mounted securely.

9. SUN VISORS

Check that they move freely and are mounted securely.

10. STEERING WHEEL

Check that it has the specified free-play. Be alert for changes in steering condition, such as hard steering, excessive free-play or strange noises.

11. SEATS

(a) Check that the seat adjusters operate smoothly.
(b) Check that all latches lock securely in any position.
(c) Check that the head restraints move up and down smoothly and that the locks hold securely in any latch position.
(d) For fold-down seat backs, check that the latches lock securely.

12. SEAT BELTS

(a) Check that the seat belt system such as the buckles, retractors and anchors operate properly and smoothly.
(b) Check that the belt webbing is not cut, frayed, worn or damaged.

13. ACCELERATOR PEDAL

Check the pedal for smooth operation and uneven pedal effort or catching.

14. BRAKE PEDAL (See page BR-6)

(a) Check the pedal for smooth operation.

(b) Check that the pedal has the proper reserve distance and free-play.

(c) Check the brake booster function.

15. BRAKES

At a safe place, check that the brakes do not pull to one side when applied.

16. PARKING BRAKE (See page BR-9)

(a) Check that the parking brake pedal has the proper travel.

(b) On a safe incline, check that the vehicle is held securely with only the parking brake applied.

17. AUTOMATIC TRANSMISSION ”PARK” MECHANISM

(a) Check the lock release mechanism of the selector lever for proper and smooth operation.

(b) On a safe incline, check that the vehicle is held securely with the selector lever in ”P” position and all brakes released.

OUTSIDE VEHICLE

MA001-12

GENERAL MAINTENANCE

These are maintenance and inspection items which are considered to be the owner's responsibility. They can be done by the owner or they can have them done at a service shop.
These items include those which should be checked on a daily basis, those which, in most cases, do not require (special) tools and those which are considered to be reasonable for the owner to do.
Items and procedures for general maintenance are as follows.

1. GENERAL NOTES

- Maintenance items may vary from country to country. Check the owner's manual supplement in which the maintenance schedule is shown.
- Every service item in the periodic maintenance schedule must be performed.
- Periodic maintenance service must be performed according to whichever interval in the periodic maintenance schedule occurs first, the odometer reading (miles) or the time interval (months).
- Maintenance service after the last period should be performed at the same interval as before unless otherwise noted.
- Failure to do even one item an cause the engine to run poorly and increase exhaust emissions.

2. TIRES

(a) Check the pressure with a gauge. If necessary, adjust.
(b) Check for cuts, damage or excessive wear.

3. WHEEL NUTS

When checking the tires, check the nuts for looseness or for missing nuts. If necessary, tighten them.

4. TIRE ROTATION

Check the owner's manual supplement in which the maintenance schedule is shown.

5. WINDSHIELD WIPER BLADES

Check for wear or cracks whenever they do not wipe clean. If necessary, replace.

6. FLUID LEAKS

(a) Check underneath for leaking fuel, oil, water or other fluid.
(b) If you smell gasoline fumes or notice any leak, have the cause found and corrected.

7. DOORS AND ENGINE HOOD

(a) Check that all doors including the trunk lid operate smoothly, and that all latches lock securely.
(b) Check that the engine hood secondary latch secures the hood from opening when the primary latch is released.

UNDER HOOD

MA003-12

GENERAL MAINTENANCE

1. GENERAL NOTES

- Maintenance items may vary from country to country. Check the owner's manual supplement in which the maintenance schedule is shown.
- Every service item in the periodic maintenance schedule must be performed.
- Periodic maintenance service must be performed according to whichever interval in the periodic maintenance schedule occurs first, the odometer reading (miles) or the time interval (months).
- Maintenance service after the last period should be performed at the same interval as before unless otherwise noted.
- Failure to do even one item an cause the engine to run poorly and increase exhaust emissions.

2. WINDSHIELD WASHER FLUID

Check that there is sufficient fluid in the tank.

3. ENGINE COOLANT LEVEL

Check that the coolant level is between the "FULL" and "LOW" lines on the see-through reservoir.

4. RADIATOR AND HOSES

(a) Check that the front of the radiator is clean and not blocked with leaves, dirt or bugs.

(b) Check the hoses for cracks, kinks, rot or loose connections.

5. BATTERY ELECTROLYTE LEVEL

Check that the electrolyte level of all battery cells is between the upper and lower level lines on the case.

6. BRAKE FLUID LEVEL

Check that the brake fluid level is near the upper level line on the see-through reservoirs.

7. ENGINE DRIVE BELTS

Check drive belt for fraying, cracks, wear or oiliness.

8. ENGINE OIL LEVEL

Check the level on the dipstick with the engine turned off.

9. POWER STEERING FLUID LEVEL

- Check the level.
- The level should be in the "HOT" or "COLD" range depending on the fluid temperature.

10. AUTOMATIC TRANSMISSION FLUID LEVEL

(a) Park the vehicle on a level surface.

(b) With the engine idling and the parking brake applied, shift the selector into all positions from "P" to "L", and then shift into "P" position.

(c) Pull out the dipstick and wipe off the fluid with a clean rag. Re-insert the dipstick and check that the fluid level is in the "HOT" range.

(d) Do this check with the fluid at normal driving temperature (70 - 80˚C, 158 - 176˚F).

HINT:

Wait until the engine cools down (approx. 30 min.) before checking the fluid level after extended driving at high speeds, in hot weather, in heavy traffic or pulling a trailer.

11. EXHAUST SYSTEM

If any change in the sound of the exhaust or smell of the exhaust fumes is noticed, have the cause located and corrected.

PP0B8-04

EQUIPMENT

Voltmeter	
Ammeter	
Ohmmeter	
Test lead	
Thermometer	Sensor, ECT switch
Torque wrench	
Dial indicator	Magnetic clutch
Plastic hammer	Magnetic clutch

PP0B9-09

LUBRICANT

Item	Capacity	Classification
Compressor oil	-	ND-OIL 8 or equivalent
When replacing condenser	40 cc (1.4 fl.oz.)	
When replacing evaporator	40 cc (1.4 fl.oz.)	
When replacing compressor	120 cc (4.1 fl.oz.)	

PP0B7-02

RECOMMENDED TOOLS

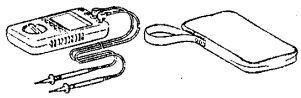	09082-00040	TOYOTA Electrical Tester.	
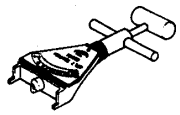	09216-00021	Belt Tension Gauge .	

AIR CONDITIONING

PP2DG-02

SST (Special Service Tools)

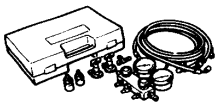	07110-58060	Air Conditioner Service Tool Set	
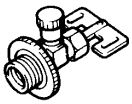	(07117-58060)	Refrigerant Drain Service Valve	
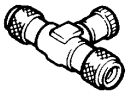	(07117-58070)	T-Joint	
	(07117-58080)	Quick Disconnect Adapter	High pressure side
	(07117-58090)	Quick Disconnect Adapter	Low pressure side
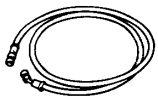	(07117-88060)	Refrigerant Charging Hose	High pressure side (Color: Red)
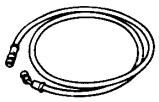	(07117-88070)	Refrigerant Charging Hose	Low pressure side (Color: Blue)
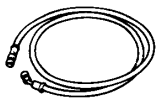	(07117-88080)	Refrigerant Charging Hose	Utility (Color: Green)
	07112-66040	Magnetic Clutch Remover	
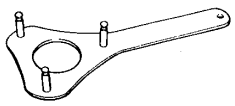	07112-76060	Magnetic Clutch Stopper	
	95994-10010	Snap Ring Pliers (DENSO Part No.)	
	95994-10020	Snap Ring Pliers (DENSO Part No.)	

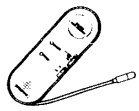	07116-38360	Gas Leak Detector Assembly	
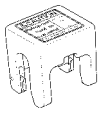	09870-00015	A/C Quick Joint Puller No.1	
	09870-00025	A/C Quick Joint Puller No.2	

PP0M3-02

EQUIPMENT

Straight edge	Torque converter clutch
Vernier calipers	Torque converter clutch
Dial indicator or dial indicator with magnetic base	Drive plate
Hexagon Wrench (10 mm)	
Torque wrench	
OBD II scan tool	

PP0M4-05

LUBRICANT

Item	Capacity	Classification
Automatic transaxle fluid (w/o Differential oil) Dry fill Drain and refill	 8.0 liters (8.5 US qts, 7.0 Imp. qts) 4.75 liters (5.0 US qts, 4.2 Imp. qts)	ATF D-II or DEXRON®III (DEXRON®II)

PP0M2-06

RECOMMENDED TOOLS

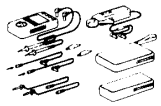	09082-00050	TOYOTA Electrical Tester Set.	
	09090-04020	Engine Sling Device	

AUTOMATIC TRANSAXLE

PP0M1-02

SST (Special Service Tools)

	09223-15020	Oil Seal & Bearing Replacer	
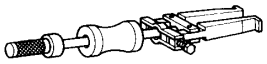	09308-00010	Oil Seal Puller	Side gear shaft oil seal
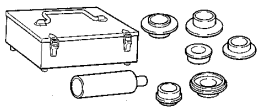	09316-6001 1	Transmission & Transfer Bearing Replacer	RH side bearing
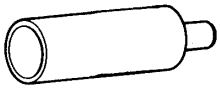	(09316-0001 1)	Replacer Pipe	RH side gear shaft oil seal
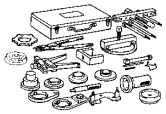	09350-32014	TOYOTA Automatic Transmission Tool Set	
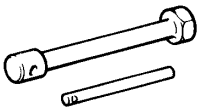	(09351-32010)	One-way Clutch Test Tool	
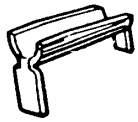	(09351-32020)	Stator Stopper	
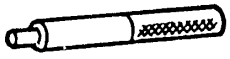	(09351-32130)	Handle	
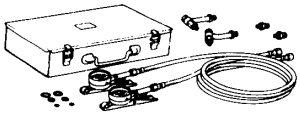	09992-00095	Automatic Transmission Oil Pressure Gauge Set	Line pressure
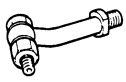	(09992-00231)	Adaptor C	Line pressure
	(09992-00271)	Gauge Assy	Line pressure

PP0B4-01

EQUIPMENT

Voltmeter	
Ammeter	
Ohmmeter	
Test lead	
Thermometer	Engine oil level warning switch, Seat heater
Syphon	Brake fluid level warning switch
Oil bath	Engine oil level warning switch
Bulb (3 W)	Fuel sender gauge
Bulb (3.4 W)	Seat belt warning relay
Bulb (21 W)	Turn signal flasher relay
Dry cell battery	Fuel sender gauge
Heat light	Seat heater
Torque wrench	
Masking tape	Rear window defogger wire
Tin foil	Rear window defogger wire

PP0B3-01

RECOMMENDED TOOLS

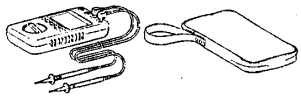	09082-00040	TOYOTA Electrical Tester.	
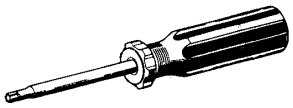	09041-00030	Torx Driver T30 .	For removing and installing steering wheel pad
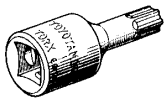	09042-00010	Torx Socket T30 .	For removing and installing steering wheel pad

PP0VH-01

SSM (Special Service Materials)

	08888-88888	DuPont Paste No. 4817 or equivalent	Rear window defogger

BODY ELECTRICAL

PP0B2-01

SST (Special Service Tools)

	09843-18020 Diagnosis Check Wire	

PP0AZ-04

EQUIPMENT

Clip remover	
Torque wrench	
Hog ring pliers	
Tape	To avoid surface damage
Adhesive tape	To avoid surface damage
Double-stick tape	
Adhesive	
Cleaner	
Shop rag	
Knife	
Sealer gun	
Brush	
Putty spatula	
Glass plate or similar object	
Wooden block or similar object	
Heat light	
Piano wire	
Tire Width: 185 mm (7.28 in.) Inner diam: 360 mm (14.17 in.)	Seat belt pretensioner
Tire with disk wheel Width: 185 mm (7.28 in.) Inner diam: 360 mm (14.17 in.)	Seat belt pretensioner
Vinyl bag	Seat belt pretensioner

PP0B0-01

LUBRICANT

Item	Capacity	Classification
MP grease	-	-

PP2DM-01

RECOMMENDED TOOLS

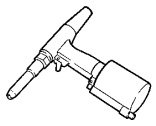	09050-20010	Air Riveter.	
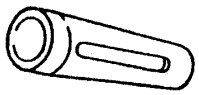	(09050-02010)	Dust Cap.	
	(09050-02020)	Nose Piece No.1.	

PP2DL-01

SSM (Special Service Materials)

08833-00070	Adhesive 1324, THREE BOND 1324 or equivalent	
08850-00801	Windshield Glass Adhesive Set or equivalent	

BODY

PP0UX-01

SST (Special Service Tools)

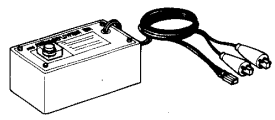	09082-00700	SRS Airbag Deployment Tool	
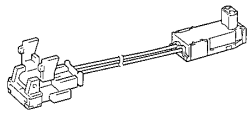	09082-00740	Airbag Deployment Wire Sub-harness No.2	
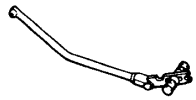	09804-24010	Luggage Compartment Door Torsion Bar Tool	
	09812-00010	Door Hinge Set Bolt Wrench	

PP0AZ-04

EQUIPMENT

Clip remover	
Torque wrench	
Hog ring pliers	
Tape	To avoid surface damage
Adhesive tape	To avoid surface damage
Double-stick tape	
Adhesive	
Cleaner	
Shop rag	
Knife	
Sealer gun	
Brush	
Putty spatula	
Glass plate or similar object	
Wooden block or similar object	
Heat light	
Piano wire	
Tire Width: 185 mm (7.28 in.) Inner diam: 360 mm (14.17 in.)	Seat belt pretensioner
Tire with disk wheel Width: 185 mm (7.28 in.) Inner diam: 360 mm (14.17 in.)	Seat belt pretensioner
Vinyl bag	Seat belt pretensioner

PP0B0-01

LUBRICANT

Item	Capacity	Classification
MP grease	-	-

PP2DM-01

RECOMMENDED TOOLS

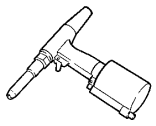	09050-20010	Air Riveter.	
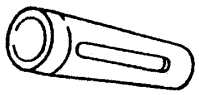	(09050-02010)	Dust Cap.	
	(09050-02020)	Nose Piece No.1.	

PP2DL-01

SSM (Special Service Materials)

08833-00070	Adhesive 1324, THREE BOND 1324 or equivalent	
08850-00801	Windshield Glass Adhesive Set or equivalent	

BODY

PP0UX-01

SST (Special Service Tools)

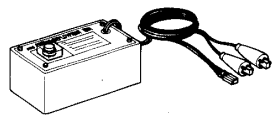	09082-00700	SRS Airbag Deployment Tool	
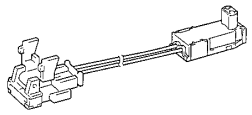	09082-00740	Airbag Deployment Wire Sub-harness No.2	
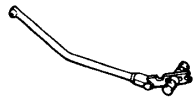	09804-24010	Luggage Compartment Door Torsion Bar Tool	
	09812-00010	Door Hinge Set Bolt Wrench	

PP0UB-03

EQUIPMENT

Torque wrench	
Micrometer	Brake disc
Dial indicator	Brake disc
Brake drum gauge	Brake disc

PP0UC-02

LUBRICANT

Item	Capacity	Classification
Brake fluid	-	SAE J1703 or FMVSS No. 116 DOT3

PP2DR-01

RECOMMENDED TOOLS

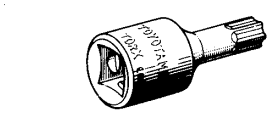	09042-00030	Torx Socket T20 .	
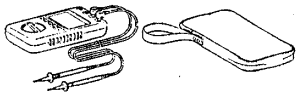	09082-00040	TOYOTA Electrical Tester.	
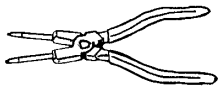	09905-00013	Snap Ring Pliers .	
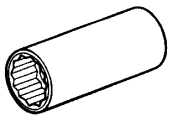	09017-12301	Deep Socket Wrench 30 mm .	

BRAKE

PP2DQ-01

SST (Special Service Tools)

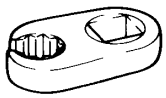	09023-00100	Union Nut Wrench 10 mm	
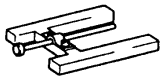	09737-0001 1	Brake Booster Push Rod Gauge	
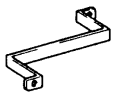	09737-00020	Brake Booster Push Rod Wrench	
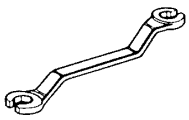	09751-3601 1	Brake Line Union Nut 10 x 12 mm Wrench	
	09843-18020	Diagnosis Check Wire	
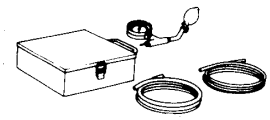	09992-00242	Turbocharger Pressure Gauge	
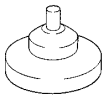	09992-00350	Brake Reservoir Pressure Adapter	

PP0S6-01

EQUIPMENT

Ammeter (A)	
Battery specific gravity gauge	Except maintenance free battery
Belt tension gauge	
OBDII scan tool	
Torque wrench	
Vernier calipers	Rotor (Slip ring)

PP0S5-01

RECOMMENDED TOOLS

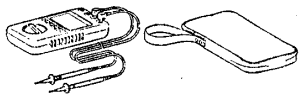	09082-00040 TOYOTA Electrical Tester.	

CHARGING

PP0S4-02

SST (Special Service Tools)

	09285-76010	Injection Pump Camshaft Bearing Cone Replacer	Rotor rear bearing cover
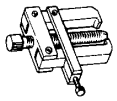	09286-4601 1	Injection Pump Spline Shaft Puller	Rectifier end frame
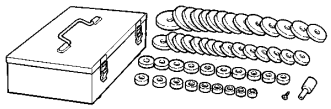	09950-60010	Replacer Set	
	(09951-00520)	Replacer 52	Rotor front bearing
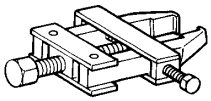	09820-00021	Alternator Rear Bearing Puller	
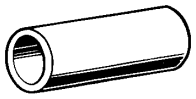	09820-00030	Alternator Rear Bearing Replacer	Rotor rear bearing
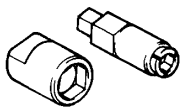	09820-63010	Alternator Pulley Set Nut Wrench Set	

PP0RT-02

COOLANT

Item	Capacity	Classification
Engine coolant	9.0 liters (9.5 US qts, 7.9 lmp. qts)	Toyota Long Life Coolant" or equivalent

PP0RS-01

EQUIPMENT

Heater	ECT switch
Radiator cap tester	
Thermometer	ECT switch
Torque wrench	

PP0RR-03

RECOMMENDED TOOLS

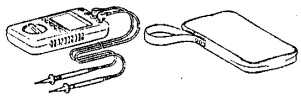	09082-00040 TOYOTA Electrical Tester.	

COOLING

PP0JZ-06

SST (Special Service Tools)

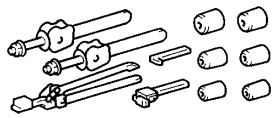	09230-01010 Radiator Service Tool Set	
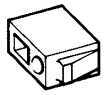	09231-14010 Punch	

EMISSION CONTROL

EQUIPMENT

PP0RL-02

Hose clipper	
MITYVAC (Hand-held vacuum pump)	
Pressure gauge	
Torque wrench	
Vacuum gauge	

PP0RJ-01

EQUIPMENT

Caliper gauge	
CO/HC meter	
Connecting rod aligner	
Cylinder gauge	
Dial indicator	
Dye penetrant	
Engine tune-up tester	
Heater	
Magnetic finger	
Micrometer	
OBDII scan tool	
Piston ring compressor	
Piston ring expander	
Plastigage	
Precision straight edge	
Soft brush	
Spring tester	Valve spring
Steel square	Valve spring
Thermometer	
Torque wrench	
Valve seat cutter	
Vernier calipers	

PP0RI-03

RECOMMENDED TOOLS

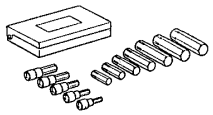	09040-0001 1	Hexagon Wrench Set .	
	09090-04020	Engine Sling Device	For suspending engine
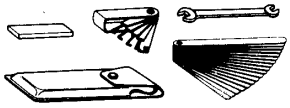	09200-00010	Engine Adjust Kit .	
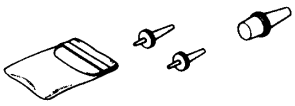	09258-00030	Hose Plug Set .	Plug for the vacuum hose, fuel hose etc.
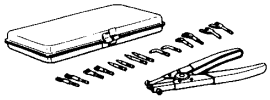	09904-00010	Expander Set .	

ENGINE MECHANICAL

PP0RH-04

SST (Special Service Tools)

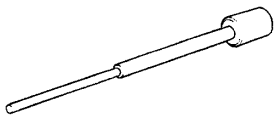	09201-01055	Valve Guide Bushing Remover & Re placer 5.5	
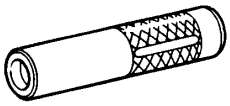	09201-41020	Valve Stem Oil Seal Replacer	
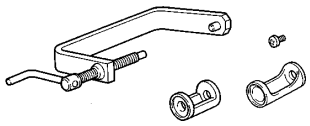	09202-70020	Valve Spring Compressor	
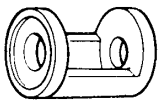	(09202-00010)	Attachment	
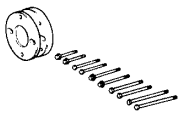	09213-54015	Crankshaft Pulley Holding Tool	
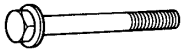	(91651-60855)	Bolt	
	09222-30010	Connecting Rod Bushing Remover & Replacer	
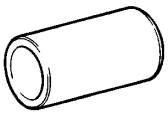	09223-00010	Cover & Seal Replacer	Crankshaft front oil seal
	09223-15030	Oil Seal & Bearing Replacer	Crankshaft rear oil seal
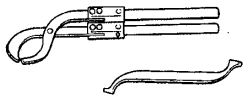	09248-55040	Valve Clearance Adjust Tool Set	
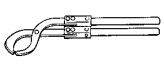	(09248-05410)	Valve Lifter Press	
	(09248-05420)	Valve Lifter Stopper	

	09249-63010	Torque Wrench Adaptor	RH camshaft timing pulley
	09330-00021	Companion Flange Holding Tool	Crankshaft pulley
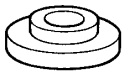	09608-03071	Replacer	Spark plug tube gasket
	09816-30010	Oil Pressure Switch Socket	Knock sensor
	09843-18020	Diagnosis Check Wire	
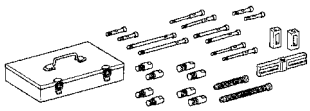	09950-50012	Puller C Set	
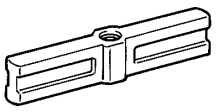	(09951-05010)	Hanger 150	Crankshaft pulley Crankshaft timing pulley
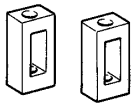	(09952-05010)	Slide Arm	Crankshaft pulley Crankshaft timing pulley
	(09953-05010)	Center Bolt 100	Crankshaft pulley Crankshaft timing pulley
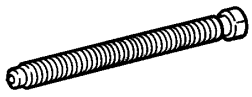	(09953-05020)	Center Bolt 150	Crankshaft pulley Crankshaft timing pulley
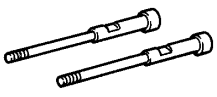	(09954-05010)	Claw No.1	Crankshaft timing pulley
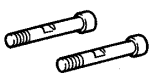	(09954-05020)	Claw No.2	Crankshaft pulley
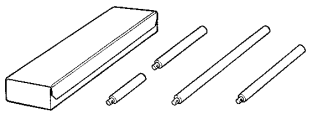	09950-70010	Handle Set	

	(09951-07100)	Handle 100	Valve guide bushing Crankshaft rear oil seal
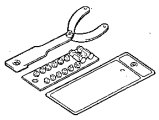	09960-10010	Variable Pin Wrench Set	
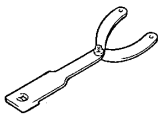	(09962-01000)	Variable Pin Wrench Arm Assy	Camshaft timing pulley Camshaft sub-gear
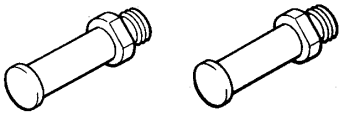	(09963-01000)	Pin 10	Camshaft timing pulley
	(09963-00500)	Pin 5	Camshaft sub-gear

PP0S0-01

EQUIPMENT

Megger insulation resistance meter	Spark plug
Spark plug cleaner	

IGNITION

PP0RZ-01

RECOMMENDED TOOLS

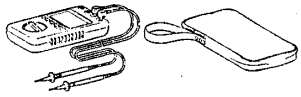	09082-00040	TOYOTA Electrical Tester.	
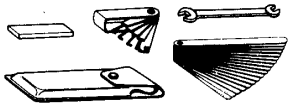	09200-00010	Engine Adjust Kit .	

PP0RW-01

EQUIPMENT

Oil pressure gauge	
Precision straight edge	Oil pump
Torque wrench	

PP0RX-01

LUBRICANT

Item	Capacity	Classification
Engine oil		API grade SH Energy-Conserving II or SJ, Energy-Conserving or ILSAC multigrade engine oil. SAE 5W-30 is the best choice for your vehicle, for good fuel economy and good starting in cold weather.
Dry fill	5.2 liters (5.5 US qts, 4.6 lmp. qts)	
Drain and refill		
w/ Oil filter change	4.7 liters (5.0 US qts, 4.1 lmp. qts)	
w/o Oil filter change	4.5 liters (4.8 US qts, 4.0 lmp. qts)	

PP0RV-02

RECOMMENDED TOOLS

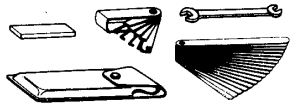	09200-00010 Engine Adjust Kit .	

LUBRICATION

PP0RU-02

SST (Special Service Tools)

	09032-00100	Oil Pan Seal Cutter	No.2 oil pan
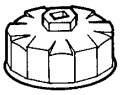	09228-07501	Oil Filter Wrench	
	09816-30010	Oil Pressure Switch Socket	

MAINTENANCE

EQUIPMENT

PP0RG-01

Mirror	Brake hose
Torque wrench	

MAINTENANCE

EQUIPMENT

PP0RG-01

Mirror	Brake hose
Torque wrench	

PP0MS-01

EQUIPMENT

Torque wrench	
Bolt: Length: 35 mm (1.38 in.) Pitch: 1.0 mm (0.039 in.) Diam.: 6.0 mm (0.236 in.)	Airbag disposal
Tire Width: 185 mm (7.28 in.) Inner diam.: 360mm (14.17 in.)	Airbag disposal
Tire with disc wheel Width: 185 mm (7.28 in.) Inner diam.: 360 mm (14.17 in.)	Airbag disposal
Vinyl bag	Airbag disposal

PP0V2-01

RECOMMENDED TOOLS

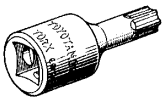	09042-00020	Torx Socket T40 .	Airbag sensor assembly
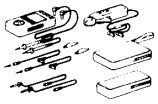	09082-00050	TOYOTA Electrical Tester Set.	
	09082-00040	TOYOTA Electrical Tester.	
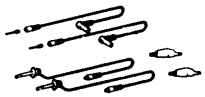	(09083-00150)	Test Lead Set	Seat belt pretensioner connector

SUPPLEMENTAL RESTRAINT SYSTEM

PP0MQ-03

SST (Special Service Tools)

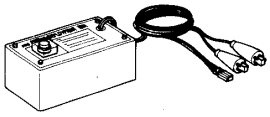	09082-00700	SRS Airbag Deployment Tool	
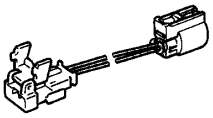	09082-00750	Airbag Deployment Wire Sub-harness No.3	
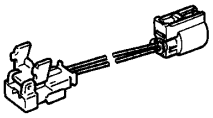	09082-00760	Airbag Deployment Wire Sub-harness No.4	
	09843-18020	Diagnosis Check Wire	

PP08X-02

EQUIPMENT

Dial indicator with magnetic base	
Drill	
Torque wrench	

PP08Y-04

LUBRICANT

Item	Capacity	Application
Outboard joint grease Color=Gray	105 - 125 g (3.7 - 4.4 oz.)	
Inboard joint grease Color=Yellow ocher	170 - 190 g (6.0 - 6.7 oz.)	

PP08W-02

RECOMMENDED TOOLS

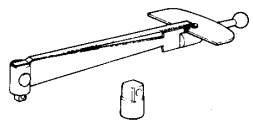	09025-00010	Torque Wrench (30 kgf-cm)	
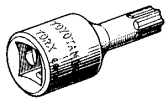	09042-00010	Torx Socket T30 .	
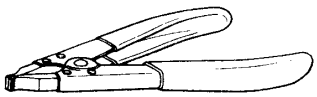	09905-00012	Snap Ring No.1 Expander .	
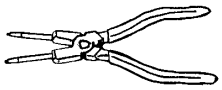	09905-00013	Snap Ring Pliers .	

SUSPENSION AND AXLE

PP2EQ-01

SST (Special Service Tools)

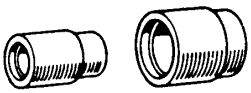	09238-47012	Water Pump Bearing Remover & Replacer	Front suspension
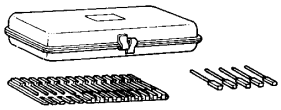	09240-00020	Wire Gauge Set	Front drive shaft
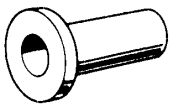	09309-36010	Transmission Rear Bearing Replacer	Front drive shaft
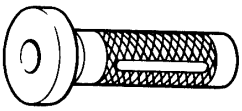	09310-35010	Countershaft Bearing Replacer	Front axle
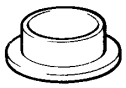	09316-2001 1	Transfer Bearing Replacer	Front drive shaft
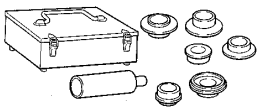	09316-6001 1	Transmission & Transfer Bearing Replacer	Front axle Front suspension
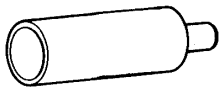	(09316-0001 1)	Replacer Pipe	
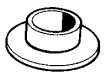	(09316-00041)	Replacer "C"	
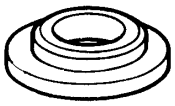	09506-35010	Differential Drive Pinion Rear Bearing Replacer	Front drive shaft
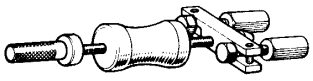	09520-00031	Rear Axle Shaft Puller	Front axle
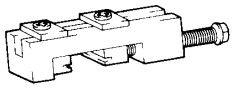	09521-24010	Drive Shaft Boot Clamping Tool	Front drive shaft
	09527-1701 1	Rear Axle Shaft Bearing Remover	Front axle

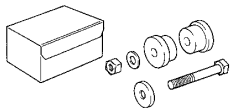	09608-16042	Front Hub Bearing Adjusting Tool	Front drive shaft
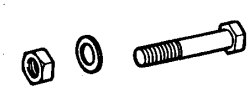	(09608-02021)	Bolt & Nut	
	(09608-02041)	Retainer	
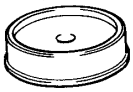	09608-32010	Steering Knuckle Oil Seal Replacer	Front axle Front suspension
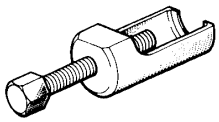	09610-20012	Pitman Arm Puller	Front axle
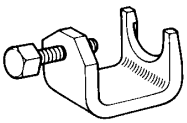	09628-1001 1	Ball Joint Puller	Front axle Rear axle
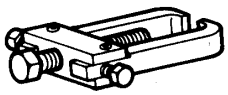	09628-6201 1	Ball Joint Puller	Front axle Front suspension
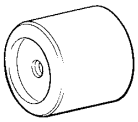	09649-17010	Steering Knuckle Tool	Front suspension
	09710-04081	Base	Front suspension
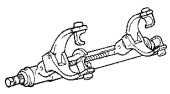	09727-30021	Coil Spring Compressor	Front suspension Rear suspension
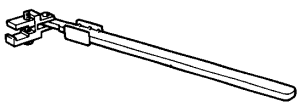	09729-22031	Front Spring Upper Seat Holder	Front suspension
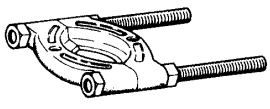	09950-00020	Bearing Remover	Front axle Front drive shaft
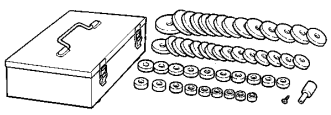	09950-60010	Replacer Set	Front axle

	(09951-00400)	Replacer 40	
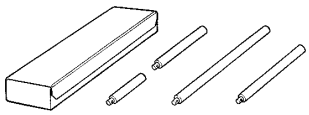	09950-70010	Handle Set	Front axle
	(09951-07100)	Handle 100	

PP0RP-02

COOLANT

Item	Capacity	Classification
Engine coolant	9.0 liters (9.5 US qts, 7.9 lmp. qts)	”TOYOTA Long Life Coolant” or equivalent

PP0RO-01

EQUIPMENT

Carburetor cleaner	Throttle body
Graduated cylinder	Injector
OBDII scan tool	
Soft brush	Throttle body
Sound scope	Injector
Torque wrench	
Vacuum gauge	

PP0RN-03

RECOMMENDED TOOLS

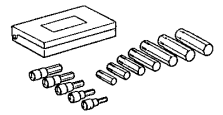	09040-0001 1	Hexagon Wrench Set .	
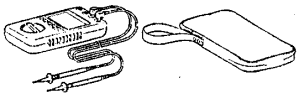	09082-00040	TOYOTA Electrical Tester.	
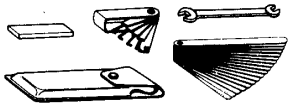	09200-00010	Engine Adjust Kit .	
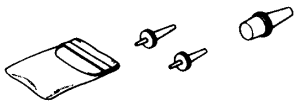	09258-00030	Hose Plug Set .	Plug for the vacuum hose, fuel hose etc.

SFI

PP0RM-04

SST (Special Service Tools)

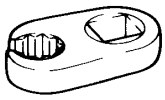	09023-12700	Union Nut Wrench 17mm	
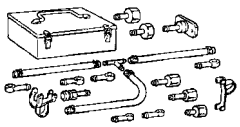	09268-41047	Injection Measuring Tool Set	
	(09268-41300)	Clamp	Injector
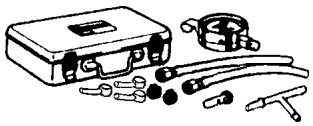	09268-45014	EFI Fuel Pressure Gauge	
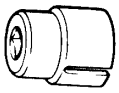	09817-1601 1	Back-up Light Switch Tool	Knock sensor
	09842-30070	Wiring ”F” EFI Inspection	
	09843-18020	Diagnosis Check Wire	

PP0V6-02

EQUIPMENT

Belt tension gauge	Drive belt
Caliper gauge	PS vane pump
Vernier calipers	PS vane pump
Dial indicator	PS gear
Feeler gauge	PS vane pump
Micrometer	PS vane pump
Torque wrench	

PP0V7-02

LUBRICANT

Item	Capacity	Classification
Power steering fluid Total	0.8 liters (0.8 US qts, 0.7 lmp.qts)	ATF DEXRON® II or III

PP0V5-02

RECOMMENDED TOOLS

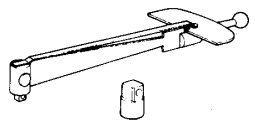	09025-00010	Torque Wrench (30 kgf-cm)	PS vane pump PS gear
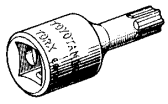	09042-00010	Torx Socket T30 .	Tilt steering column
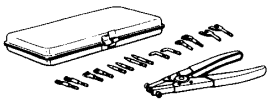	09904-00010	Expander Set .	
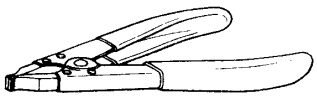	09905-00012	Snap Ring No.1 Expander .	
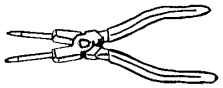	09905-00013	Snap Ring Pliers .	

PP0V8-01

SSM (Special Service Materials)

08833-00080	Adhesive 1344 THREE BOND 1344 LOCTITE 242 or equivalent	PS gear

STEERING

PP0V4-05

SST (Special Service Tools)

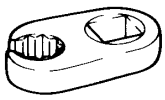	09023-38200	Union Nut Wrench 12mm	PS gear
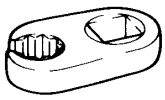	09023-38400	Union Nut Wrench 14mm	PS vane pump PS gear
	09249-63010	Torque Wrench Adaptor	PS vane pump
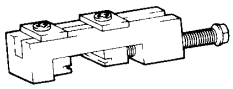	09521-24010	Drive Shaft Boot Clamping Tool	PS gear
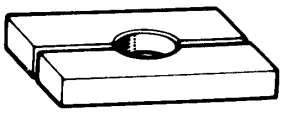	09527-2001 1	Rear Axle Shaft Bearing Remover	PS gear
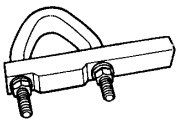	09612-00012	Rack & Pinion Steering Rack Housing Stand	PS gear
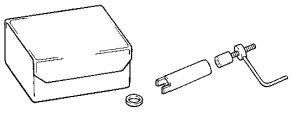	09612-07010	Main Shaft Retaining Ring Remover & Replacer	Tilt steering column
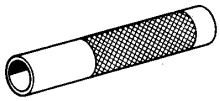	09612-2201 1	Tilt Handle Bearing Replacer	PS gear
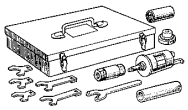	09612-24014	Steering Gear Housing Overhaul Tool Set	PS gear
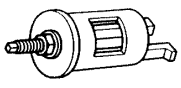	(09613-2201 1)	Steering Rack Shaft Bushing Puller	
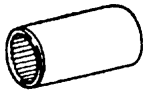	09616-0001 1	Steering Worm Bearing Adjusting Socket	PS gear
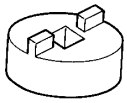	09631-10021	Rack Stopper Wrench	PS gear

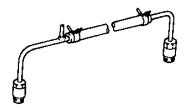	09631-12071	Steering Rack Oil Seal Test Tool	PS gear
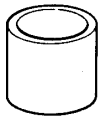	09631-20081	Seal Ring Tool	PS gear
	09631-33010	Steering Rack Cover "I"	PS gear
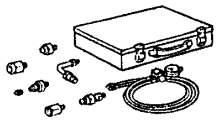	09640-10010	Power Steering Pressure Gauge Set	Power steering fluid
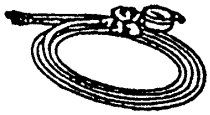	(09641-01010)	Gauge Assy	
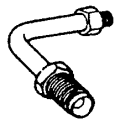	(09641-01030)	Attachment B	
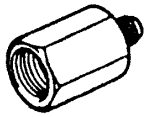	(09641-01060)	Attachment E	
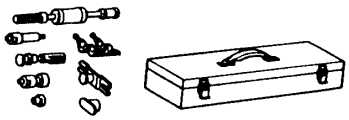	09910-00015	Puller Set	Tilt steering column
	(09911-0001 1)	Puller Clamp	
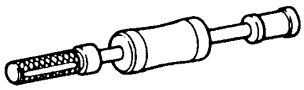	(09912-00010)	Puller Slide Hammer	
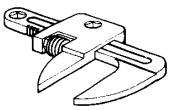	09922-10010	Variable Open Wrench	PS gear
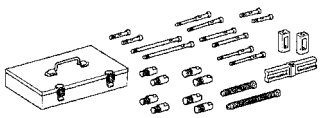	09950-50012	Puller C Set	Tilt steering column
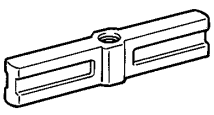	(09951-05010)	Hanger 150	

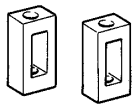	(09952-05010)	Slide Arm	
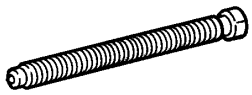	(09953-05020)	Center Bolt 150	
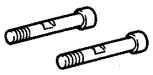	(09954-05020)	Claw No.2	
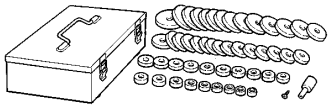	09950-60010	Replacer Set	
	(09951-00180)	Replacer 18	PS gear
	(09951-00240)	Replacer 24	PS gear
	(09951-00250)	Replacer 25	PS gear
	(09951-00260)	Replacer 26	PS gear
	(09951-00290)	Replacer 29	PS gear
	(09951-00310)	Replacer 31	PS gear
	(09951-00320)	Replacer 32	PS gear
	(09951-00330)	Replacer 33	PS vane pump
	(09951-00340)	Replacer 34	PS gear

	(09951-00400)	Replacer 40	PS gear
	(09951-00430)	Replacer 43	PS gear
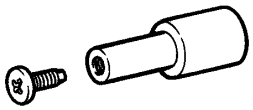	(09952-06010)	Adapter	PS gear
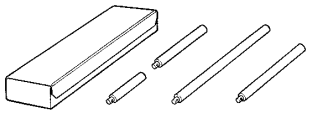	09950-70010	Handle Set	
	(09951-07100)	Handle 100	PS vane pump
	(09951-07200)	Handle 200	PS gear
	(09951-07360)	Handle 360	PS gear
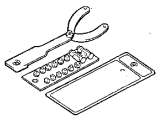	09960-10010	Variable Pin Wrench Set	PS vane pump
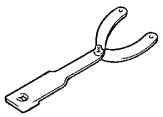	(09962-01000)	Variable Pin Wrench Arm Assy	
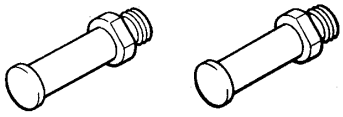	(09963-01000)	Pin 10	

PP0S3-01

EQUIPMENT

Dial indicator	Commutator
Magnetic finger	Steel ball
Press	Magnetic switch terminal kit
Pull scale	Brush spring
Sandpaper	Commutator
Torque wrench	
V-block	Commutator
Vernier calipers	Commutator, Brush

PP0S2-01

RECOMMENDED TOOLS

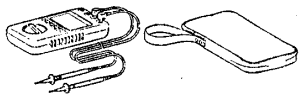	09082-00040 TOYOTA Electrical Tester.	

STARTING

PP0S1-01

SST (Special Service Tools)

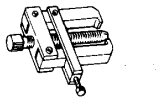	09286-4601 1	Injection Pump Spline Shaft Puller	Armature bearing
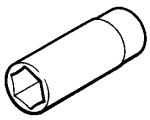	09810-38140	Starter Magnet Switch Nut Wrench 14	Terminal nut
	09820-00030	Alternator Rear Bearing Replacer	Armature front bearing

AIR CONDITIONING

SS05V-08

SERVICE DATA

Refrigerant charge volume	600 ± 50 g (21.16 ± 1.76 oz.)
Drive belt tension	-
New belt	165 ± 22lbf
Used belt	88 ± 22 lbf
Idle-up speed	-
Magnetic clutch not engaged	700 ± 50 rpm
Magnetic clutch engaged	700 ± 50 rpm
Magnetic clutch clearance	0.5 ± 0.15 mm (0.020 ± 0.0059 in.)

SS05W-07

TORQUE SPECIFICATION

Part tightened	N·m	kgf·cm	ft·lbf
Compressor x Discharge hose	10	100	7
Compressor x Suction hose	10	100	7
Condenser x Disaharge hose	5.4	55	48 in.·lbf
Condenser x Liquid tube	5.4	55	48 in.·lbf
Expansion valve x Evaporator	5.4	55	48in.·lbf
Compressor x Engine	25	250	18
Compressor x Compressor bracket	25	250	18
Drive belt adjusting bar bracket x Compressor	25	250	18
Pivot bolt	56	560	41
Adjusting lock bolt	18	185	13
Pressure switch x Liquied tube	10	100	7
Pressure plate x Compressor	13.2	135	9

AUTOMATIC TRANSAXLE

SS0BL-04

SERVICE DATA

Line pressure (wheel locked)	Engine idling	
	D position	401 - 461 kPa (4.1 - 4.7 kgf/cm^2, 58 - 66 psi)
	R position	804 - 882 kPa (8.2 - 9.0 kgf/cm^2, 117 - 128 psi)
	at stall (Throttle valve fully opened)	
	D position	1,138 - 1,236 kPa (11.6 - 12.6 kgf/cm^2, 165 - 179 psi)
	R position	1,716 - 1,854 kPa (17.5 - 18.9 kgf/cm^2, 249 - 269 psi)
Engine stall revolution		2,325 – 2,775 rpm
Time lag	N → D position	Less than 1.2 seconds
	N → R position	Less than 1.5 seconds
Engine idle speed (A/C OFF)		
	N position	700 ± 50 rpm
Throttle cable adjustment (Throttle valve fully opened)		Between boot and face and inner cable stopper 0 - 1 mm (0 - 0.04 in.)
Drive plate runout	Max.	0.3 mm (0.0118 in.)
Torque converter clutch runout	Max.	0.20 mm (0.0079 in.)
Torque converter clutch installation distance		More than 13.7 mm (0.539 in.)
Lock-up point	(Throttle valve opening 5%)	
3rd gear (O/D main switch OFF)	Lock-up ON	65 - 70 km/h (40 - 43 mph)
	Lock-up OFF	57 - 62 km/h (35 - 39 mph)
O/D gear	Lock-up ON	65 - 70 km/h (40 - 43 mph)
	Lock-up OFF	57 - 62 km/h (35 - 39 mph)
Shift schedule		
D position		
(Throttle valve fully opened)	1 → 2	65 - 71 km/h (40 - 44 mph)
	2 → 3	122 - 131 km/h (76 - 81 mph)
	3 → O/D	188 - 198 km/h (117 - 123 mph)
	O/D → 3	181 - 191 km/h (112 - 119 mph)
	3 → 2	113 - 122 km/h (70 - 76 mph)
	2 → 1	54 - 59 km/h (34 - 37 mph)
(Throttle valve fully closed)	3 → O/D	38 - 43 km/h (24 - 27 mph)
	O/D → 3	22 - 27 km/h (14 - 17 mph)
2 position		
(Throttle valve fully opened)	1 → 2	65 - 71 km/h (40 - 44 mph)
	3 → 2	132 - 141 km/h (82 - 88 mph)
	2 → 1	54 - 59 km/h (34 - 37 mph)
L position		
(Throttle valve fully opened)	3 → 2	115 - 124 km/h (71 - 77 mph)
	2 → 1	59 - 64 km/h (37 - 40 mph)

SS0BM-04

TORQUE SPECIFICATION

Part tightened		N·m	kgf·cm	ft·lbf
Front side engine mounting insulator x Front frame assembly		80	820	59
Rear engine mounting insulator x Front frame assembly		66	670	48
LH transaxle mounting insulator x Front frame assembly		80	820	59
Engine mounting insulator x Front frame assembly		48	490	35
Transaxle x Engine	17 mm bolt	66	670	48
	14 mm bolt	48	490	35
Torque converter clutch x Drive plate		41	420	30
Valve body x Transaxle case		11	110	8
Oil strainer x Valve body (See page AX-35)	Bolt A	10	100	7
	Bolt B	11	110	8
Oil pan x Transaxle case		7.8	80	69 in.·lbf
Oil pan drain plug		49	500	36
Park/Neutral position switch x Transaxle case	Bolt	5.4	55	48 in.·lbf
	Nut	6.9	70	61 in.·lbf
Connector clamp x Valve body		6.6	67	58 in.·lbf
Manual valve body x Transaxle case		11	110	8
Line pressure test plug x Transaxle case		7.5	80	69 in.·lbf
Detent spring x Manual valve body		11	110	8
Oil pipe bracket x Transaxle case		10	100	7
Steering gear housing x Front frame assembly		181	1,850	134
Stabilizer bar bracket x Front frame assembly		19	195	14
Stabilizer bar link x Stabilizer bar		39	400	29
Lower suspension arm x Lower ball joint		127	1,300	94
Tie rod end x Steering knuckle		49	500	36
Drive shaft lock nut		294	3,000	217
Direct clutch speed sensor x Transaxle case		11	110	8
Exhaust manifold bracket x Transaxle case		20	200	15
Exhaust manifold plate		20	200	15
Front frame assembly x Body	19 mm bolt	181	1,850	134
	14 mm bolt	32	330	24
	Nut	36	370	27
Front exhaust pipe x Exhaust center pipe		43	440	32
Exhaust manifold x Front exhaust pipe		62	630	46
Exhaust front pipe support stay x Exhaust front pipe support bracket		33	330	24
Starter x Torque converter clutch housing		39	400	29
Transaxle control shaft lever x Park/neutral position switch		15	150	11
Throttle cable adjusting nut		15	150	11
Drive plate x Crankshaft		83	850	61
Shift control cable x Transaxle control shaft lever		15	150	11
Throttle cable retaining plate set bolt		5.4	55	48 in.·lbf
Shift solenoid valve No. 1, No. 2, SL, SLN x Valve body		6.6	67	58 in.·lbf
Front wheel nut		103	1,050	76
Exhaust front pipe support bracket x Body		21	210	15
PS reservoir pipe x Front frame		10	100	7

Engine hood x Hood hinge	26	265	19
Engine hanger x Engine	20	200	14
Cruise control actuator x Body	13	130	9
RH drive shaft x Rear side engine mounting insulator	32	330	24
Hole cover x Torque converter clutch housing	41	420	30
Floor shift assembly x Body	12	120	9

BODY ELECTRICAL

SS05U-04

SERVICE DATA

AUTOMATIC LIGHT CONTROL SENSOR	
(Connector disconnected)	
1 - Ground Ignition switch LOCK or ACC)	No voltage
1 - Ground (Ignition switch ON)	Battery positive voltage
4 - Ground Ignition switch LOCK or ACC)	No voltage
4 - Ground (Ignition switch ON)	5.2 - 9.0V
SPEEDOMETER (ON-VEHICLE)	
USA:	
Standard indication (mph)	Allowable range (mph)
20	18 - 24
40	38 - 44
60	56 - 66
80	78 - 88
100	98 - 110
120	118 - 132
CANADA:	
Standard indication (km/h)	Allowable range (km/h)
20	17 - 24
40	38 - 46
60	57.5 - 67
80	77 - 88
100	96 - 109
120	115 - 130
140	134 - 151.5
160	153 - 173
TACHOMETER (ON-VEHICLE)/ DC 13.5 V 25 ˚C at (77 ˚F)	
Standard indication	Allowable range
700	630 - 770
1,000	900 - 1,100
2,000	1,850 - 2,150
3,000	2,800 - 3,200
4,000	3,800 - 4,200
5,000	4,800 - 5,200
6,000	5,750 - 6,250
7,000	6,700 - 7,300
FUEL RECEIVER GAUGE	
A - B	Approx. 250 Ω
C - D	Approx. 250 Ω
FUEL SENDER GAUGE	
Float position mm (in.)	Resistance (Ω)
F: Approx. 91.1 (1.36) ± 3.0 (0.12)	Approx. 2.0±1.0
1/2: Approx. 34.1 (2.06) ± 3.0 (0.12)	Approx. 26.1±3.0
E: Approx. 30.8 (5.31) ± 3.0 (0.12)	Approx. 48.7±1.0

ENGINE COOLANT TEMPERATURE SENDER GAUGE (Resistance)	
Temperature ˚C (˚F)	Resistance (Ω)
A - B	Approx. 250 Ω
C - D	Approx. 250 Ω
LIGHT FAILURE RELAY (Wire Harness Side)	
3 - Ground (Light control switch OFF)	No voltage
3 - Ground (Light control switch TAIL or HEAD)	Battery positive voltage
4 - Ground (Ignition switch LOCK or ACC)	No voltage
4 - Ground (Ignition switch ON)	Battery positive voltage
7 - Ground (Stop light switch OFF)	No voltage
7 - Ground (Stop light switch ON)	Battery positive voltage
8 - Ground (Ignition switch LOCK or ACC)	No voltage
8 - Ground (Ignition switch ON)	Battery positive voltage
SLIDING ROOF CONTROL RELAY AND SWITCH (Wire Harness Side)	
8 - Ground (Ignition switch LOCK or ACC)	* No voltage
8 - Ground (Ignition switch ON)	Battery positive voltage
5 - Ground (Constant)	Battery positive voltage

*: Exceptions: For 60 seconds after the ignition switch ON→OFF (ACC) or until driver or passenger door is opened after the ignition switch ON→OFF (ACC).

BODY

TORQUE SPECIFICATION

SS0G3-06

Part tightened	N·m	kgf·cm	ft·lbf
FRONT BUMPER	-	-	-
Front bumper upper reinforcement x Body	11	115	8
Front bumper upper reinforcement x Side support	5.4	55	48 in.·lbf
Side support x Body	11	115	8
Front bumper reinforcement x Body	13	130	9
Front bumper cover x Body	5.4	55	48 in.·lbf
Fog light assembly x Front bumper cover	8.3	85	74 in.·lbf
REAR BUMPER	-	-	-
Rear bumper arm mounting bracket x Body	33	340	25
Rear bumper reinforcement x Rear bumper arm mounting bracket	33	340	25
Rear bumper cover x Body	5.4	55	48 in.·lbf
HOOD	-	-	-
Hood x Hood hinge	13	130	9
Hood lock x Body	6.9	70	61 in.·lbf
HOOD SUPPORT	-	-	-
Hood support x Hood	17	175	13
Hood support x Body	17	175	13
FRONT DOOR	-	-	-
Outside rear view mirror x Door panel	7.8	80	69 in.·lbf
Door check x Body	25	260	19
Door glass x Window regulator assembly	5.4	55	48 in.·lbf
Window regulator assembly x Door panel	5.4	55	48 in.·lbf
Door lock x Door panel Bolt:	4.9	50	43 in.·lbf
Door lock x Door panel Nut:	5.4	55	48 in.·lbf
Outside handle x Door panel	5.4	55	48 in.·lbf
Outside handle x Key cylinder	5.4	55	48 in.·lbf
Door hinge x Body	25	260	19
Door hinge x Door panel	25	260	19
REAR DOOR	-	-	-
Door check x Body	25	260	19
Door glass x Window regulator assembly	5.4	55	48 in.·lbf
Window regulator assembly x Door panel	5.4	55	48 in.·lbf
Door lock x Door panel	5.4	55	48 in.·lbf
Outside handle x Door panel	5.4	55	48 in.·lbf
Door hinge x Body	25	260	19
Door hinge x Door panel	25	260	19
LUGGAGE COMPARTMENT DOOR AND HINGE	-	-	-
Luggage compartment door x Door hinge arm	7.8	80	69 in.·lbf
Door lock x Luggage compartment door	5.4	55	48 in.·lbf
Door lock striker x Body	5.4	55	48 in.·lbf

FRONT WIPER AND WASHER	-	-	-
Wiper arm x Wiper motor and link assembly	24	248	18
Wiper motor and link assembly x Body	7.0	71	62 in.·lbf
Wiper motor x Wiper link	7.5	76	66 in.·lbf
SLIDING ROOF	-	-	-
Sliding roof glass assembly x Drive cable	4.0	41	35 in.·lbf
Drive gear x Body	5.4	55	48 in.·lbf
Sliding roof bracket x Body	5.4	55	48 in.·lbf
Sliding roof bracket x Sliding roof assembly	5.4	55	48 in.·lbf
Sliding roof assembly x Body	5.4	55	48 in.·lbf
INSTRUMENT PANEL	-	-	-
Front passenger airbag assembly x Instrument panel reinforcement	20	204	15
Steering wheel set nut	50	510	37
FRONT SEAT	-	-	-
Front seat assembly x Body	37	375	27
Front seat cushion x Front seat adjuster	18	185	13
Front seatback x Front seat adjuster	43	440	32
Front seatback x Center armrest	41	420	30
REAR SEAT	-	-	-
Rear seatback x Center armrest	5.9	60	52 in.·lbf
Rear seatback x Body Center	41	420	30
Rear seatback x Body LH, RH Side	18	185	13
SEAT BELT	-	-	-
Front seat outer belt shoulder anchor x Adjuster anchor	41	420	30
Front seat outer belt floor anchor x Body	41	420	30
Front seat outer belt retractor x Body Upper bolt	7.5	76	66 in.·lbf
Front seat outer belt retractor x Body Lower bolt	41	420	30
Front seat adjustable anchor x Body	41	420	30
Front seat inner belt x Seat adjuster	41	420	30
Front seat center belt x Seat adjuster	41	420	30
Rear seat outer belt floor anchor x Body	41	420	30
Rear seat outer belt retractor x Body	41	420	30

BRAKE

SS0FS-03

SERVICE DATA

Brake pedal height (from asphalt sheet)		153.3 - 163.3 mm (6.035 - 6.429 in.)
Brake pedal freeplay		1 - 6 mm (0.04 - 0.24 in.)
Brake pedal reserve distance at 490 N (50 kgf, 110.2 lbf)		More than 75 mm (3.0 in.)
Brake booster push rod to piston clearance (w/ SST)		0 mm (0 in.)
Front brake pad thickness	STD Minimum	11.0 mm (0.433 in.) 1.0 mm (0.039 in.)
Front brake disc thickness	STD Minimum	28.0 mm (1.102 in.) 26.0 mm (1.024 in.)
Front brake disc runout	Maximum	0.05 mm (0.0020 in.)
Rear brake pad thickness	STD Minimum	10.0 mm (0.394 in.) 1.0 mm (0.039 in.)
Rear brake disc thickness	STD Minimum	12.0 mm (0.472 in.) 10.5 mm (0.413 in.)
Rear brake disc runout	Maximum	0.15 mm (0.0059 in.)
Rear brake disc inside diameter	STD Maximum	170 mm (6.69 in.) 171 mm (6.73 in.)
Parking brake shoe lining thickness	STD Minimum	2.0 mm (0.079 in.) 1.0 mm (0.039 in.)
Parking brake pedal travel at 294 N (30 kgf, 66 lbf)		3 - 6 clicks
Parking brake clearance between rear shoe and lever		Less than 0.35 mm (0.0138 in.)
Parking brake adjusting shim thickness		0.3 mm (0.012 in.) 0.6 mm (0.024 in.) 0.9 mm (0.035 in.)

SS0FT-05

TORQUE SPECIFICATION

Part tightened		N·m	kgf·cm	ft·lbf
Master cylinder x Piston stopper bolt	w/o VSC	10	100	7
Master cylinder x Reservoir		1.7	17.5	15.2 in.·lbf
Master cylinder x Brake booster		13	130	9
Brake line union nut	10 mm	15	155	11
	12 mm	20	200	15
Brake booster clevis lock nut		25	260	19
Brake booster x Pedal bracket		13	130	9
Brake pedal x Pedal bracket		39	400	29
Front brake caliper installation bolt		34	350	25
Bleeder plug		8.3	85	74 in.·lbf
Front brake torque plate x Steering knuckle		107	1,090	79
Front brake caliper x Flexible hose		29	300	22
Flexible hose x Shock absorber bracket		29	300	22
Rear brake caliper installation bolt		34	350	25
Rear brake caliper x Flexible hose		29	300	22
Rear brake torque plate x Rear axle carrier		47	475	34
Parking brake pedal bracket x Body		61	620	45
ABS actuator x ABS actuator bracket		13	130	9
ABS actuator x ECU		3.0	31	27 in.·lbf
ABS & VSC actuator x Actuator bracket		13	130	9
ABS (& VSC) actuator bracket x Body		19	195	14
Front speed sensor installation bolt		8.0	82	71 in.·lbf
Rear speed sensor installation bolt		8.0	82	71 in.·lbf
ABS speed sensor harness clamp bolt		5.4	55	48 in.·lbf
Precharge pump x Precharge pump bracket	Bolt	8.0	82	71 in.·lbf
	Nut	13	130	9
Precharge pump brackt x Body		19	195	14
Precharge pump x Master cylinder pressure sensor		81	830	60

CHARGING

SS0ET-02

SERVICE DATA

Battery	Specific gravity		
	(Except maintenance-free battery)	at 20˚C (68˚F)	1.25 - 1.29
	Voltage		
	(Maintenance-free battery)	at 20˚C (68˚F)	12.5 - 12.9 V
Drive belt	Tension		
	New belt		175 ± 5 lbf
	Used belt		115 ± 20 lbf
Generator	Rated output		12 V 100 A
	Rotor coil resistance	at 20˚C (68˚F)	2.1 - 2.5 Ω
	Slip ring diameter	STD	14.2 - 14.4 mm (0.559 - 0.567 in.)
		Minimum	12.8 mm (0.504 in.)
	Brush exposed length	STD	10.5 mm (0.413 in.)
		Minimum	1.5 mm (0.059 in.)
Voltage regulator	Regulating voltage		13.2 - 14.8 V

SS0EU-02

TORQUE SPECIFICATION

Part tightened	N·m	kgf·cm	ft·lbf
Bearing retainer x Drive end frame	3.0	31	27 in.·lbf
Rectifier end frame x Drive end frame	4.5	46	40 in.·lbf
Cord clamp x Rectifier end frame	5.4	55	48 in.·lbf
Generator pulley x Rotor	110.5	1,125	81
Rectifier holder x Coil lead on rectifier end frame	2.9	30	26 in.·lbf
Voltage regulator and brush holder x Rectifier end frame	2.0	20	18 in.·lbf
Plate terminal x Rectifier holder	3.9	39	35 in.·lbf
Rear end cover x Rectifier holder	4.4	45	39 in.·lbf
Terminal insulator x Rectifier holder	4.1	42	36 in.·lbf
Generator x Generator bracket	56	570	41
Generator x Adjusting bar	18	180	13
Generator wire x Generator	9.8	100	86 in.·lbf

COOLING

SERVICE DATA

SS0EL-01

Thermostat	Valve opening pressure		80 - 84˚C (176 - 183˚F)
	Valve lift	at 95˚C (203˚F)	10.0 mm (0.394 in.) or more
Radiator cap	Relief valve opening pressure	STD	83 - 113 kPa (0.85 - 1.15 kgf/cm^2, 12.1 - 16.4 psi)
		Minimum	69 kPa (0.7 kgf/cm^2, 10.0 psi)
Cooling fan	Rotating amperage	at 20˚C (68˚F) No.1	5.1 - 6.3 A
		No.2	9.2 - 11.0 A

SS0EM-01

TORQUE SPECIFICATION

Part tightened	N·m	kgf·cm	ft·lbf
RH engine drain plug x EGR cooler	7	70	61 in.·lbf
LH engine drain plug x Union on cylinder block	13	130	9
Water pump x Cylinder block	6	60	53 in.·lbf
Water inlet x Water inlet housing	8	80	69 in.·lbf
Water inlet pipe x LH cylinder head	19.5	200	14
Radiator support x Body	12.8	130	9
No.1 cooling fan shroud x Radiator	5.0	50	44 in.·lbf
No.1 cooling fan x Cooling fan motor	6.2	63	55 in.·lbf
No.2 cooling fan shroud x Radiator	5.0	50	44 in.·lbf

EMISSION CONTROL

TORQUE SPECIFICATION

SS0EI-02

Part tightened	N·m	kgf·cm	ft·lbf
Charcoal canister x Body	39.2	400	29
LH exhaust manifold x Cylinder head	49	500	63
LH exhaust manifold x A/F sensor	44	450	33
Front exhaust pipe x Exhaust manifold	62	630	46
Front exhaust pipe x Center exhaust pipe	56	570	41
Front exhaust pipe stay x Front exhaust pipe support bracket	33	330	24
Center exhaust pipe x Tail pipe	43	440	32
Heated oxygen sensor x Front exhaust pipe	44	450	33

ENGINE MECHANICAL

SERVICE DATA

SS0EF-02

Compression pressure		at 250 rpm STD	1,500 kPa (15.3 kgf/cm^2, 218 psi)
		Minimum	1,000 kPa (10.2 kgf/cm^2, 145 psi)
	Difference of pressure between each cylinder		100 kPa (1.0 kgf/cm^2, 15 psi) or less
Valve clearance		at cold Intake	0.15 - 0.25 mm (0.006 - 0.010 in.)
		Exhaust	0.25 - 0.35 mm (0.010 - 0.014 in.)
	Adjusting shim for repair part	Mark 2.500	2.500 mm (0.0984 in.)
		Mark 2.550	2.550 mm (0.1004 in.)
		Mark 2.600	2.600 mm (0.1024 in.)
		Mark 2.650	2.650 mm (0.1043 in.)
		Mark 2.700	2.700 mm (0.1063 in.)
		Mark 2.750	2.750 mm (0.1083 in.)
		Mark 2.800	2.800 mm (0.1102 in.)
		Mark 2.850	2.850 mm (0.1122 in.)
		Mark 2.900	2.900 mm (0.1142 in.)
		Mark 2.950	2.950 mm (0.1161 in.)
		Mark 3.000	3.000 mm (0.1181 in.)
		Mark 3.050	3.050 mm (0.1201 in.)
		Mark 3.100	3.100 mm (0.1220 in.)
		Mark 3.150	3.150 mm (0.1240 in.)
		Mark 3.200	3.200 mm (0.1260 in.)
		Mark 3.250	3.250 mm (0.1280 in.)
		Mark 3.300	3.300 mm (0.1299 in.)
Ignition timing	w/ Terminals TE1 and E1 connected of DLC1		8 - 12˚ BTDC @ idle
Idle speed	-		650 ± 50 rpm
Timing belt tensioner	Protrusion from housing side		10.0 - 10.8 mm (0.394 - 0.425 in.)
Cylinder head	Warpage	Maximum	0.10 mm (0.039 in.)
	Valve seat		
	Refacing angle		30˚, 45˚, 75˚
	Contacting angle		45˚
	Contacting width		1.0 - 1.4 mm (0.039 - 0.055 in.)
	Valve guide bushing bore diameter	STD	10.295 - 10.313 mm (0.4053 - 0.4080 in.)
		O/S 0.05	10.345 - 10.363 mm (0.4073 - 0.4080 in.)
	12 pointed head cylinder head bolt diameter		
		at tension portion STD	8.95 - 9.05 mm (0.3524 - 0.3563 in.)
		Minimum	8.75 mm (0.3445 in.)
Valve guide bushing	Inside diameter		5.510 - 5.530 mm (0.2169 - 0.2177 in.)
	Outside diameter for repair part	STD	10.333 - 10.344 mm (0.4068 - 0.4072 in.)
		O/S 0.05	10.383 - 10.394 mm (0.4088 - 0.4092 in.)
Valve	Valve overall length	STD Intake	95.45 mm (3.5779 in.)
		Exhaust	95.40 mm (3.7559 in.)
		Minimum Intake	94.95 mm (3.7382 in.)
		Exhaust	94.90 mm (3.7362 in.)
	Valve face angle		44.5˚
	Stem diameter	Intake	5.470 - 5.485 mm (0.2154 - 0.2159 in.)
		Exhaust	5.465 - 5.480 mm (0.2152 - 0.2157 in.)
	Stem oil clearance	STD Intake	0.025 - 0.060 mm (0.0010 - 0.0024 in.)
		Exhaust	0.030 - 0.065 mm (0.0012 - 0.0026 in.)
		Maximum Intake	0.08 mm (0.0031 in.)
		Exhaust	0.10 mm (0.0039 in.)
	Margin thickness	STD	1.0 mm (0.039 in.)
		Maximum	0.5 mm (0.020 in.)

Valve spring	Deviation	Maximum	2.0 mm (0.079 in.)
	Free length		45.50 mm (1.7913 in.)
	Installed tension at 33.8 mm (1.331 in.)		186 - 206 N (19.0 - 21.0 kgf, 41.9 - 46.3 lbf)
Valve lifter	Lifter diameter		30.966 - 30.976 mm (1.2191 - 2.2195 in.)
	Lifter bore diameter		31.000 - 31.016 mm (1.2205 - 1.2211 in.)
	Oil clearance	STD	0.024 - 0.050 mm (0.0009 - 0.0020 in.)
		Maximum	0.07 mm (0.0028 in.)
Camshaft	Thrust clearance	STD	0.040 - 0.090 mm (0.0016 - 0.0035 in.)
		Maximum	0.12 mm (0.0047 in.)
	Journal oil clearance	STD Intake	0.035 - 0.072 mm (0.0014 - 0.0028 in.)
		Exhaust	0.025 - 0.062 mm (0.0010 - 0.0024 in.)
		Maximum Intake	0.10 mm (0.0039 in.)
		Exhaust	0.09 mm (0.0035 in.)
	Journal diameter		26.949 - 26.965 mm (1.0610 - 1.0616 in.)
	Circle runout	Maximum	0.06 mm (0.0024 in.)
	Cam lobe height	STD Intake	42.11 - 42.21 mm (1.6579 - 1.6618 in.)
		Exhaust	41.96 - 42.06 mm (1.6520 - 1.6559 in.)
		Minimum Intake	41.96 mm (1.6520 in.)
		Exhaust	41.81 mm (1.6461 in.)
	Camshaft gear backlash	STD	0.020 - 0.200 mm (0.0008 - 0.0079 in.)
		Maximum	0.30 mm (0.0188 in.)
	Camshaft gear spring end free distance		18.2 - 18.8 mm (0.712 - 0.740 in.)
Air intake chamber	Warpage	Maximum	0.10 mm (0.0039 in.)
Intake manifold	Warpage		
	Air intake chamber side	Maximum	0.15 mm (0.0059 in.)
	Cylinder head side	Maximum	0.08 mm (0.0031 in.)
Exhaust manifold	Warpage	Maximum	0.50 mm (0.0196 in.)
Cylinder block	Cylinder head surface warpage	Maximum	0.07 mm (0.0028 in.)
	Cylinder bore diameter		87.500 - 87.512 mm (3.4449 - 3.4453 in.)
		Maximum	87.52 mm (3.4457 in.)
	12 pointed head main bearing cap bolt diameter		
	at tension portion	STD	7.500 - 7.600 mm (0.2953 - 0.2992 in.)
		Minimum	7.20 mm (0.2835 in.)
Piston and piston ring	Piston diameter		
	AISIN made		
	at 23.2 mm (0.913 in.) from the piston head		87.406 - 87.416 mm (3.4412 - 3.4416 in.)
	MAHLE made		
	at 41.2 mm (1.622 in.) from the piston head		87.453 - 87.467 mm (3.4430 - 3.4436 in.)
	Piston oil clearance		
	AISIN made	STD	0.084 - 0.106 mm (0.0033 - 0.0042)
		Maximum	0.13 mm (0.0051 in.)
	MAHLE made	STD	0.033 - 0.059 mm (0.0013 - 0.0023)
		Maximum	0.08 mm (0.0031 in.)
	Piston ring groove clearance	No.1	0.020 - 0.070 mm (0.0008 - 0.0028 in.)
		No.2	0.020 - 0.060 mm (0.0008 - 0.0024 in.)
	Piston ring end gap	STD No.1	0.25 - 0.35 mm (0.0098 - 0.0138 in.)
		No.2	0.35 - 0.45 mm (0.0138 - 0.0177 in.)
		Oil	0.15 - 0.40 mm (0.0059 - 0.0157 in.)
		Maximum No.1	0.95 mm (0.0374 in.)
		No.2	1.05 mm (0.0413 in.)
		Oil	1.00 mm (0.0394 in.)

Connecting rod	Thrust clearance	STD	0.15 - 0.30 mm (0.0059 - 0.0118 in.)
		Maximum	0.35 mm (0.0138 in.)
	Connecting rod thickness		20.80 - 20.85 mm (0.8189 - 0.8209 in.)
	Connecting rod bearing center wall thickness		
	Reference	Mark 1	1.484 - 1.487 mm (0.0584 - 0.0585 in.)
		Mark 2	1.487 - 1.490 mm (0.0585 - 0.0587 in.)
		Mark 3	1.490 - 1.493 mm (0.0587 - 0.0588 in.)
		Mark 4	1.493 - 1.496 mm (0.0588 - 0.0589 in.)
	Connecting rod oil clearance	STD	0.038 - 0.064 mm (0.0015 - 0.0025 in.)
		Maximum	0.08 mm (0.0031 in.)
	Rod bend	Maximum per 100 mm (3.94 in.)	0.05 mm (0.0020 in.)
	Rod twist	Maximum per 100 mm (3.94 in.)	0.15 mm (0.0059 in.)
	Bushing inside diameter		22.005 - 22.014 mm (0.8663 - 0.8667 in.)
	Piston pin diameter		21.997 - 22.006 mm (0.8660 - 0.8664 in.)
	Bushing oil clearance	STD	0.005 - 0.011 mm (0.0002 - 0.0004 in)
		Maximum	0.05 mm (0.0020 in.)
	Connecting rod bolt diameter		
		at tension portion STD	7.2 - 7.3 mm (0.284 - 0.287 in.)
		Minimum	7.0 mm (0.276 in.)
Crankshaft	Thrust clearance	STD	0.04 - 0.24 mm (0.0016 - 0.0095 in.)
		Maximum	0.30 mm (0.0118 in.)
	Thrust washer thickness		1.930 - 1.980 mm (0.0760 - 0.0780 in.)
	Main journal oil clearance	STD No.1 and No.4	0.016 - 0.036 mm (0.0006 - 0.0014 in.)
		No.2 and No.3	0.028 - 0.048 mm (0.0011 - 0.0019 in.)
		Maximum No.1 and No.4	0.05 mm (0.0020 in.)
		No.2 and No.3	0.06 mm (0.0024 in.)
	Main journal diameter		60.988 - 61.000 mm (2.4011 - 2.4016 in.)
	Main bearing center wall thickness		
	Reference	Mark 1	2.485 - 2.488 mm (0.0978 - 0.0980 in.)
		Mark 2	2.488 - 2.491 mm (0.0980 - 0.0981 in.)
		Mark 3	2.491 - 2.494 mm (0.0981 - 0.0982 in.)
		Mark 4	2.494 - 2.497 mm (0.0982 - 0.0983 in.)
		Mark 5	2.497 - 2.500 mm (0.0983 - 0.0984 in.)
		Mark 6	2.500 - 2.503 mm (0.0984 - 0.0985 in.)
		Mark 7	2.503 - 2.506 mm (0.0985 - 0.0987 in.)
	Crank pin diameter		52.992 - 53.000 mm (2.0863 - 2.0866 in.)
	Circle runout	Maximum	0.06 mm (0.0024 in.)
	Main journal taper and out-of-round	Maximum	0.02 mm (0.0008 in.)
	Crank pin taper and out-of-round	Maximum	0.02 mm (0.0008 in.)

SS0EG-02

TORQUE SPECIFICATION

Part tightened		N·m	kgf·cm	ft·lbf
Timing belt plate x Oil pump		8	80	69 in.·lbf
No.1 idler pulley x Oil pump		34	350	25
No.2 idler pulley x No.2 idler pulley bracket		43	440	32
Camshaft timing pulley x Camshaft		125	1,300	94
	for SST	88	900	65
Timing belt tensioner x Oil pump		27	280	20
RH engine mounting bracket x Cylinder block		28	290	21
No.2 timing belt cover x No.3 timing belt cover		8.5	85	74 in.·lbf
No.1 timing belt cover x Oil pump		8.5	85	74 in.·lbf
Crankshaft pulley x Crankshaft		215	2,200	159
No.2 generator bracket x Engine RH mounting bracket		28	290	21
Cylinder head x Cylinder block	12 pointed head 1st	54	550	40
	2nd	Turn 90°	Turn 90°	Turn 90°
	Recessed head	18.5	185	13
Camshaft bearing cap x Cylinder head		16	160	12
Cylinder head cover x Cylinder head		8	80	69 in.·lbf
Exhaust manifold x Cylinder head		49	500	36
Exhaust manifold stay x Exhaust manifold	California	34	350	25
	Except California	20	200	15
Exhaust manifold stay x Transmission housing	California	34	350	25
	Except California	20	200	15
No.1 EGR pipe x RH exhaust manifold		12	120	9
No.1 EGR pipe x EGR cooler		12	120	9
PS pump bracket x RH cylinder head		43	440	32
Oil dipstick guide x LH cylinder head		8	80	69 in.·lbf
Water inlet pipe x LH cylinder head		19.5	200	14
Cylinder head rear plate x LH cylinder head		8	80	69 in.·lbf
No.3 timing belt cover x Cylinder head		8.5	85	74 in.·lbf
Water outlet x Intake manifold		15	150	11
Fuel inlet hose x Fuel filter		29	300	21
Intake manifold x Cylinder head		15	150	11
Air intake chamber x Intake manifold		43	440	32
No.2 EGR pipe x Air intake chamber		12	120	9
No.2 EGR pipe x EGR cooler		12	120	9
No.1 engine hanger x Air intake chamber		39	400	29
No.1 engine hanger x RH cylinder head		39	400	29
Air intake chamber stay x Air intake chamber		19.5	200	14
Air intake chamber stay x RH cylinder head		19.5	200	14
Main bearing cap x Cylinder block	12 pointed head 1st	22	225	16
	2nd	Turn 90°	Turn 90°	Turn 90°
	6 pointed head	27	275	20
Connecting rod cap x Connecting rod	1st	24.5	250	18
	2nd	Turn 90°	Turn 90°	Turn 90°
Rear oil seal retainer x Cylinder block		8	80	69 in.·lbf
EGR cooler x Cylinder block		9	90	78 in.·lbf

Engine coolant drain union x Cylinder block	39	400	29
Water seal plate x Cylinder block	18	180	13
Oil filter union x Cylinder block	30	310	22
Water inlet housing x Cylinder block	8	80	69 in.·lbf
Knock sensor x Cylinder block	39	400	29
No.2 idler pulley bracket x Cylinder block	28	290	21
A/C compressor housing bracket x Cylinder block	25	250	18
Generator bracket x Cylinder block	43	440	32
Drive plate x Crankshaft	83	850	61
Transaxle x Engine	64	650	47
No.1 oil pan x Transaxle	37.2	380	27
Drive plate x Torque convertor clutch	41	420	30
Flywheel housing under cover x Transaxle	7.8	80	69 in.·lbf
Rear engine mounting insulator x Cylinder block	64	650	47
Front engine mounting insulator x Cylinder block	64	650	47
Engine moving control rod x RH engine mounting bracket	64	650	47
Engine moving control rod x RH fender apron	64	650	47
RH engine mounting stay x Water outlet	32	320	23
RH engine mounting stay x Engine moving control rod	32	320	23
RH engine mounting stay x No.2 RH engine mounting bracket	32	320	23
Front engine mounting insulator x Front frame — Silver color bolt	44	450	32
Front engine mounting insulator x Front frame — Green color bolt	66	670	49
Engine mounting absorber x Front frame	48	490	35
Engine mounting absorber x Transaxle	48	490	35
Rear engine mounting insulator x Front frame	66	670	48
LH engine mounting insulator x Transaxle	64	650	47
PS pump x PS pump bracket	43	440	31
A/C compressor x Housing bracket	25.5	260	19
A/C compressor x No.1 oil pan	25.5	260	19
Generator adjusting bar x Drive belt adjusting bar bracket	18	185	13
Fuel inlet hose x Fuel filter	29	300	21
Front exhaust pipe support bracket x No.1 oil pan	20.6	210	15
Front exhaust pipe x Exhaust manifold	62	630	46
Front exhaust pipe x Center exhaust pipe	56	570	41
Center exhaust pipe x Tailpipe	56	570	41
Front exhaust pipe bracket x Sub frame	33	330	24
Front exhaust pipe support bracket x Front exhaust pipe stay	33	330	24

IGNITION

SS03U-04

SERVICE DATA

Firing order	-		1 - 2 - 3 - 4 - 5 - 6
Spark plug	Recommended spark plug	DENSO NGK	SK20R11 IFR6A11
	Correct electrode gap for new plug Maximum electrode gap for used plug		1.1 mm (0.043 in.) 1.3 mm (0.051 in.)
Camshaft position sensor	Resistance	at cold at hot	835 - 1,400 Ω 1,060 - 1,645 Ω
Crankshaft position sensor	Resistance	at cold at hot	1,630 - 2,740 Ω 2,065 - 3,225 Ω

SS0EQ-01

TORQUE SPECIFICATION

Part tightened	N·m	kgf·cm	ft·lbf
Spark plug x Cylinder head	18	180	13
Ignition coil x Cylinder head	8	80	69 in.·lbf
Camshaft position sensor x Cylinder head	8	80	69 in.·lbf
Crankshaft position sensor x Oil pump	8	80	69 in.·lbf

LUBRICATION

SS0EN-01

SERVICE DATA

Oil pressure		at idle speed	29 kPa (0.3 kgf/cm^2, 43 psi) or more
		at 3,000 rpm	294 - 539 kPa (3.0 - 5.5 kgf/cm^2, 43 - 78 psi)
Oil pump	Side clearance	STD	0.030 - 0.090 mm (0.0012 - 0.0035 in.)
		Maximum	0.15 mm (0.0059 in.)
	Body clearance	STD	0.100 - 0.175 mm (0.0039 - 0.0069 in.)
		Maximum	0.30 mm (0.0118 in.)
	Tip clearance	STD	0.110 - 0.240 mm (0.0043 - 0.0094 in.)
		Maximum	0.35 mm (0.0138 in.)

SS0EO-01

TORQUE SPECIFICATION

Part tightened		N·m	kgf·cm	ft·lbf
Oil pressure switch x Cylinder block		13	130	9
No.2 oil pan x Drain plug		45	460	33
Oil pump x Relief valve plug		36.8	375	37
Oil pump x Cylinder block	10 mm head	8	80	69 in.·lbf
	12 mm head	19.5	200	14
Oil pan baffle plate x No.1 oil pan		8	80	69 in.·lbf
No.1 oil pan x Cylinder block		19.5	200	14
No.1 oil pan x Oil pump	10 mm head	8	80	69 in.·lbf
	12 mm head	19.5	200	14
No.1 oil pan x Rear oil seal retainer		8	80	69 in.·lbf
No.1 oil pan x Transaxle		37.2	380	27
Oil strainer x Main bearing cap		8	80	69 in.·lbf
Oil strainer x Oil pump		8	80	69 in.·lbf
No.2 oil pan x No.1 oil pan		8	80	69 in.·lbf
Flywheel housing under cover x Transaxle		7.8	80	69 in.·lbf
A/C compressor housing bracket x Cylinder block		25	250	18
PS pump x PS pump bracket		43.1	440	32
PS pump drive belt adjusting strut x PS pump		43.1	440	32
PS pump drive belt adjusting strut x Oil pump		43.1	440	32
Exhaust pipe bracket x No.1 oil pan		21	210	15

MAINTENANCE

SERVICE DATA

SS0ED-01

Front axle and suspension ball joint vertical play	maximum	0 mm (0 in.)

SS0EE-01

TORQUE SPECIFICATION

Part tightened	N·m	kgf·cm	ft·lbf
Front seat mount bolts	37	375	27
Front suspension member x Body	181	1,850	134
Rear suspension member x Body	51	520	38

SUPPLEMENTAL RESTRAINT SYSTEM

SS061-54

TORQUE SPECIFICATION

Part tightened		N·m	kgf·cm	ft·lbf
Steering wheel		50	510	37
Steering wheel pad		8.8	90	78 in.·lbf
Front passenger airbag assembly x Center bracket		20	205	15
Front passenger airbag assembly x Instrument panel reinforcement		20	205	15
Seatback frame assembly x Seat adjuster assembly		43	440	32
Seat cushion assembly x Seat adjuster assembly		19	194	14
Front seat inner belt x Seat adjuster assembly		42	430	31
Seat armrest assembly		41	410	30
Front seat installation bolt		37	375	27
Airbag sensor assembly		20	205	15
Front airbag sensor		20	205	15
Side airbag sensor assembly		20	205	15
Front seat outer belt retractor	Upper bolt	7.4	75	65 in.·lbf
	Lower bolt	41	420	30

SUSPENSION AND AXLE

SS04W-07

SERVICE DATA

Cold tire inflation pressure	P205/65R15 92H P205/60R16 91H	Front, rear Front, rear	210 kPa (2.1 kgf/cm^2, 31 psi) 220 kPa (2.2 kgf/cm^2, 32 psi)
Front Wheel alignment	Vehicle height	Front*1 Rear*2	213 mm (8.39 in.) 266 mm (10.47 in.)
	Camber	 Right-left error	-0 ˚37' ± 45' (-0.62˚ ± 0.75˚) 45' (0.75˚) or less
	Caster	 Right-left error	2˚10' ± 45' (2.17˚ ± 0.75˚) 45' (0.75˚) or less
	Steering axis inclination	 Right-left error	13˚04' ± 45' (13.07˚ ± 0.75˚) 45' (0.75˚) or less
	Toe-in (total)	 Rack end length difference	0˚ ± 12' (0˚ ± 0.2˚, 0 ± 2 mm, 0 ± 0.08 in.) 1.5 mm (0.059 in.) or less
	Wheel angle	Inside wheel Outside wheel: Reference	35˚45' ± 1˚ (35.75˚ ± 1˚) 31˚23' (31.38˚)
Rear wheel alignment	Camber	 Right-left error	-0 ˚43' ± 45' (-0.72˚ ± 0.75˚) 45' (0.75˚) or less
	Toe-in (total)	 No. 2 lower suspension arm length difference	0˚24' ± 12' (0.4˚ ± 0.2˚, 4 ± 2 mm, 0.16 ± 0.08 in.) 1 mm (0.04 in.) or less
Front axle	Axle bearing backlash	Maximum	0.05 mm (0.0020 in.)
	Axle hub deviation	Maximum	0.05 mm (0.0020 in.)
Front drive shaft	Drive shaft standard length	LH RH	586.0 ± 2.0 mm (23.071 ± 0.079 in.) 881.6 ± 2.0 mm (34.709 ± 0.079 in.)
Front suspension	Lower ball joint turning torque		1.0 - 3.4 N·m (10 - 35 kgf·cm, 8.7 - 30 in.·lbf)
	Stabilizer bar link ball joint turning torque		0.05 - 1.0 N·m (0.5 - 10 kgf·cm, 0.4 - 8.7 in.·lbf)
Rear axle	Axle bearing backlash	Maximum	0.05 mm (0.0020 in.)
	Axle hub deviation	Maximum	0.07 mm (0.0028 in.)
Rear suspension	No. 2 lower suspension arm length		512.3 mm (20.169 in.)
	Stabilizer bar link ball joint turning torque		0.05 - 1.0 N·m (0.5 - 10 kgf·cm, 0.4 - 8.7 in.·lbf)

*1: Front measuring point
Measure the distance from the ground to the center of the front side lower suspension arm mounting bolt.
*2: Rear measuring point
Measure the distance from the ground to the center of the front side strut rod mounting bolt.

SS04X-06

TORQUE SPECIFICATION

Part tightened	N·m	kgf·cm	ft·lbf
FRONT AXLE			
Hub nut	103	1,050	76
Tie rod end lock nut	74	750	54
Steering knuckle x Shock absorber	211	2,150	156
Steering knuckle x Brake caliper	107	1,090	79
Steering knuckle x Tie rod end	49	500	36
Axle hub x Drive shaft	294	3,000	217
Lower ball joint x Lower suspension arm	127	1,300	94
Lower ball joint x Steering knuckle	123	1,250	90
Steering knuckle x Dust cover	8.3	85	74 in.·lbf
ABS speed sensor set bolt	8.0	82	71 in.·lbf
FRONT DRIVE SHAFT			
Drive shaft center bearing lock bolt	32	330	24
FRONT SUSPENSION			
Suspension support x Body	80	820	59
Suspension support x Piston rod	49	500	36
Flexible hose and ABS speed sensor wire harness x Shock absorber	29	300	22
Lower suspension arm set bolt	206	2,100	152
Stabilizer bar bracket x Suspension member	19	195	14
Stabilizer bar link set nut	39	400	29
REAR AXLE			
Hub nut	103	1,050	76
Brake caliper x Rear axle carrier	47	475	34
Axle hub set bolt	80	820	59
Shock absorber x Rear axle carrier New nut Reused nut (Apply engine oil to the threads.)	255 196	2,600 2,000	188 145
No. 1, No. 2 lower suspension arm x Rear axle carrier	181	1,850	134
Strut rod x Rear axle carrier	113	1,150	83
ABS speed sensor set bolt	8.0	82	71 in.·lbf
REAR SUSPENSION			
ABS speed sensor wire harness x Shock absorber	5.4	55	48 in.·lbf
Flexible hose x Shock absorber	29	300	22
Rear seat belt set bolt	41	420	30
Rear seatback set bolt	18	185	13
Suspension support x Body	39	400	29
Suspension support x Piston rod	49	500	36
Center exhaust pipe set bolt	43	440	32
Parking brake cable set bolt	5.4	55	48 in.·lbf
No. 2 lower suspension arm lock nut	56	570	41
No. 1, No. 2 lower suspension arm x Suspension member	181	1,850	134
Strut rod x Body	113	1,150	83
Suspension member x Body	51	520	38
Suspension member lower stopper x Body	38	390	28

Stabilizer bar bracket x Suspension member	19	195	14
Stabilizer bar link set nut	39	400	29

SFI

SERVICE DATA

SS0EJ-02

Fuel pressure regulator	Fuel pressure	at no vacuum	301 - 347 kPa (3.1 - 3.5 kgf/cm^2, 44 - 50 psi)
Fuel pump	Resistance	at 20˚C (68˚F)	0.2 - 3.0 Ω
Injector	Resistance Injection volume Difference between each cylinder Fuel leakage	at 20˚C (68˚F)	13.4 - 14.2 Ω 60 - 73 cm^3 (3.4 - 4.5 cu in.) per 15 sec. 13 cm^3 (0.8 cu in.) or less 1 drop or less per 12 minutes
MAF meter	Resistance (THA - E2)	at -20˚C (-4˚F) at 20˚C (68˚F) at 60˚C (140˚F)	13.6 - 18.4 kΩ 2.21 - 2.69 kΩ 0.49 - 0.67 kΩ
Throttle body	Throttle opener setting speed		1,100 - 1,700 rpm
Throttle position sensor	Resistance Throttle valve fully closed Throttle valve fully open -	 VTA - E2 VTA - E2 VC - E2	 0.2 - 6.3 kΩ 2.0 - 10.2 kΩ 2.5 - 5.9 kΩ
Camshaft timing oil control valve	Resistance	at 20˚C (68˚F)	6.9 - 7.9 Ω
VSV for EVAP	Resistance	at 20˚C (68˚F)	27 - 33 Ω
VSV for ACIS	Resistance	at 20˚C (68˚F)	33 - 39 Ω
VSV for canister closed valve	Resistance	at 20˚C (68˚F) at 120˚C (248˚F)	25 - 30 Ω 33 - 42 Ω
VSV for pressure switching valve	Resistance	at 20˚C (68˚F) at 120˚C (248˚F)	37 - 44 Ω 51 - 62 Ω
Vapor Pressure Sensor	Power source voltage		4.5 - 5.5 V
ECT sensor	Resistance	at -20˚C (-4˚F) at 0˚C (32˚F) at 20˚C (68˚F) at 40˚C (104˚F) at 60˚C (140˚F) at 80˚C (176˚F)	10 - 20 kΩ 4 - 7 kΩ 2 - 3 kΩ 0.9 - 1.3 kΩ 0.4 - 0.7 kΩ 0.2 - 0.4 kΩ
A/F sensor	Heater coil resistance	at 20˚C (68˚F) at 800˚C (1472˚F)	0.8 - 1.4 Ω 1.8 - 3.2 Ω
Heated oxygen sensor	Heater coil resistance	at 20˚C (68˚F) at 800˚C (1472˚F)	11 - 16 Ω 23 - 32 Ω
Fuel cut rpm	Fuel return rpm		1,200 rpm

SS0EK-02

TORQUE SPECIFICATION

Part tightened	N·m	kgf·cm	ft·lbf
Fuel line (Union bolt type)	29	300	21
Fuel line (Flare nut type) using SST	28	285	21
Fuel pump assembly x Fuel tank	4	40	35 in.·lbf
Fuel filter x Fuel pump bracket	2.0	20	17 in.·lbf
Fuel pressure regulator x Fuel pump bracket	2.0	20	17 in.·lbf
Delivery pipe x Intake manifold	10	100	7
No.1 fuel pipe x Intake manifold	19.5	200	14
Fuel tank band x Body	39	400	29
Throttle body x Throttle body bracket	19.5	200	14
Throttle body x Air intake chamber	19.5	200	14
Throttle body x No.1 intake air control valve	6.9	70	61 in.·lbf
Camshaft timing oil control valve x Cylinder head	7.5	80	66 in.·lbf
No.2 intake air control valve x Air intake chamber	14.5	145	10
ECT sensor x Water outlet	20	200	14
Knock sensor x Cylinder block	39	400	29
A/F sensor x Exhaust manifold	44	440	32
Heated oxygen sensor x Exhaust pipe	44	440	31

STEERING

SS0G9-03

SERVICE DATA

DRIVE BELT		
Drive belt tension*	New belt	120 - 185 lbf
Drive belt tension*	Used belt	95 - 135 lbf
POWER STEERING FLUID		
Fluid level rise	Maximum	5 mm (0.20 in.)
Fluid pressure at idle speed with valve closed	Minimum	7,845 kPa (80 kgf/cm^2, 1,138 psi)
STEERING WHEEL		
Steering wheel freeplay	Maximum	30 mm (1.18 in.)
Steering effort at idle speed	Reference	5.9 N·m (60 kgf·cm, 52 in.·lbf)
POWER STEERING VANE PUMP		
Vane pump rotating torque		0.3 N·m (2.8 kgf·cm, 2.4 in.·lbf) or less
Oil clearance between pump shaft and bushing	STD	0.03 - 0.05 mm (0.0012 - 0.0020 in.)
Oil clearance between pump shaft and bushing	Maximum	0.07 mm (0.0028 in.)
Vane plate height	Minimum	8.6 mm (0.339 in.)
Vane plate thickness	Minimum	1.397 mm (0.0550 in.)
Vane plate length	Minimum	14.991 mm (0.5902 in.)
Clearance between the rotor groove and plate	Maximum	0.035 mm (0.0014 in.)
Vane plate length	Pump rotor and cam ring mark	
	None	14.999 - 15.001 mm (0.59051 - 0.59059 in.)
	1	14.997 - 14.999 mm (0.59043 - 0.59051 in.)
	2	14.995 - 14.997 mm (0.59035 - 0.59043 in.)
	3	14.993 - 14.995 mm (0.59027 - 0.59035 in.)
	4	14.991 - 14.993 mm (0.59020 - 0.59027 in.)
Spring free length	Minimum	32.3 mm (1.272 in.)
POWER STEERING GEAR		
Steering rack runout	Maximum	0.03 mm (0.0012 in.)
Total preload (Control valve rotating torque)		0.8 - 1.4 N·m (8 - 14 kgf·cm, 6.9 - 12.2 in.·lbf)

*: For use with belt tension gauge

SS0GA-06

TORQUE SPECIFICATION

Part tightened	N·m	kgf·cm	ft·lbf
TILT STEERING COLUMN			
Tilt lever lock shaft	9.0	90	78 in.·lbf
Turn signal bracket x Steering column upper tube	7.5	75	65 in.·lbf
Shift lever housing x Column tube assembly	10	100	7
Shift lever set bolt	11	110	8
Shift lock solenoid bracket x Shift lever housing	3.4	35	30 in.·lbf
Shift lock switch guide	2.8	29	25 in.·lbf
Universal joint assembly x Main shaft assembly	35	360	26
Steering column assembly set nut	25	260	19
Intermediate shaft sub-assembly x Control valve shaft	35	360	26
Universal joint assembly x Intermediate shaft sub-assembly	35	360	26
Steering wheel set nut	50	510	37
Steering wheel pad set screw (Torx screw)	8.8	90	78 in.·lbf
POWER STEERING VANE PUMP			
Rear housing set bolt	17	170	12
Pressure port union	83	850	62
Suction port union set bolt	13	130	9
Front bracket x Rear bracket	43	440	32
Vane pump pulley set nut	44	450	33
Pressure feed tube x PS vane pump assembly	52	530	38
Oil pressure switch	21	210	15
PS vane pump set bolt A bolt	29 (43)	300 (440)	22 (32)
PS vane pump set bolt B bolt	43	440	32
Pressure feed tube x Pressure feed tube	23 (25)	230 (250)	17 (18)
Clamp plate set nut	7.8	80	69 in.·lbf
POWER STEERING GEAR			
Control valve housing set bolt	18	180	13
Self-locking nut	25	250	18
Rack housing cap	59	600	43
Rack guide spring cap lock nut	50 (69)	510 (700)	37 (51)
Rack x Rack end	60 (83)	610 (850)	45 (61)
Tie rod end lock nut	74	750	54
Turn pressure tube union nut	12 (13)	120 (130)	9 (9)
PS gear assembly set bolt	181	1,850	134
Stabilizer bar set bolt	19	190	14
Pressure feed and return tubes x Control valve housing	28 (25)	290 (250)	21 (18)
Pressure feed tube clamp plate set nut	10	100	7
Intermediate shaft sub-assembly x Control valve shaft	35	360	26
Tie rod end x Steering knuckle	49	500	36

( ): For use without SST

STARTING

SERVICE DATA

SS0ER-01

Starter	Rated voltage and output power		12 V 1.4 kW
	No-load characteristics	Current	90 A or less at 11.5 V
		rpm	3,000 rpm or more
	Brush length	STD	15.5 mm (0.610 in.)
		Minimum	10 mm (0.394 in.)
	Spring installed load	STD	17.6 - 23.5 N (1.79 - 2.41 kgf, 4.0 - 5.3 lbf)
		Minimum	11.8 N (1.20 kgf, 2.7 lbf)
	Commutator		
	Diameter	STD	30.0 mm (1.181 in.)
		Minimum	29.0 mm (1.142 in.)
	Undercut depth	STD	0.6 mm (0.024 in.)
		Minimum	0.2 mm (0.008 in.)
	Circle runout	Maximum	0.05 mm (0.0020 in.)
	Magnetic switch		
	Contact plate for wear	Maximum	0.9 mm (0.035 in.)

SS0ES-01

TORQUE SPECIFICATION

Part tightened	N·m	kgf·cm	ft·lbf
End cover x Field frame	1.5	15	13 in.·lbf
Starter housing x Magnetic switch	5.9	60	52 in.·lbf
Field frame x Armature assembly	5.9	60	52 in.·lbf
Lead wire x Terminal C of starter	5.9	60	52 in.·lbf
Starter mounting bolt	39	400	29
Terminal nut x Terminal C of starter	17	173	12
Terminal nut x Terminal 30 of starter	17	173	12
Magnetic switch end cover x Magnetic switch housing	2.5	25	22 in.·lbf

STANDARD BOLT

HOW TO DETERMINE BOLT STRENGTH

SS0ZS-01

Bolt Type				Class
Hexagon Head Bolt		Stud Bolt	Weld Bolt	
Normal Recess Bolt	Deep Recess Bolt			
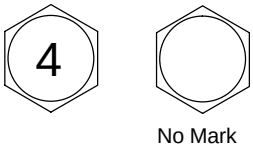 No Mark	 No Mark	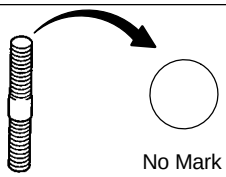 No Mark	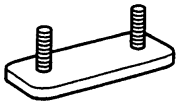	4T
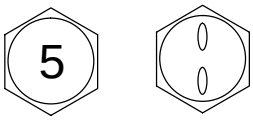	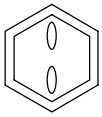			5T
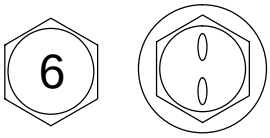 w/ Washer	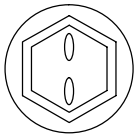 w/ Washer			6T
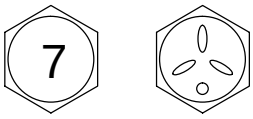	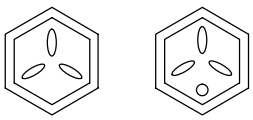			7T
				8T
				9T
	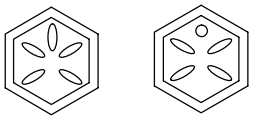			10T
	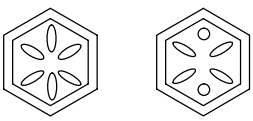			11T

B06431

SS0ZU-01

HOW TO DETERMINE NUT STRENGTH

Nut Type			Class
Present Standard Hexagon Nut	Old Standard Hexagon Nut		
	Cold Forging Nut	Cutting Processed Nut	
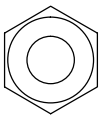 No Mark			4N
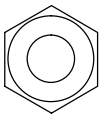 No Mark (w/ Washer)	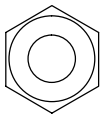 No Mark (w/ Washer)	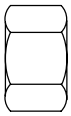 No Mark	5N (4T)
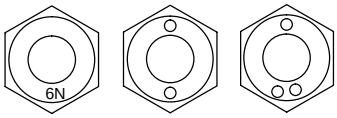 6N			6N
	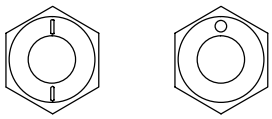	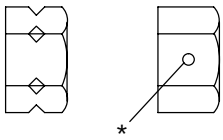 *	7N (5T)
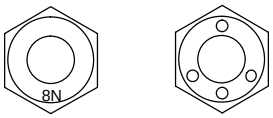 8N			8N
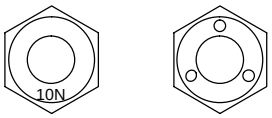 10N	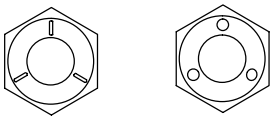	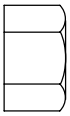 No Mark	10N (7T)
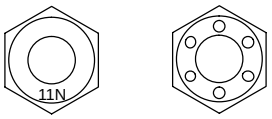 11N			11N
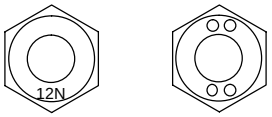 12N			12N

*: Nut with 1 or more marks on one side surface of the nut.

B06432

HINT:

Use the nut with the same number of the nut strength classification or the greater than the bolt strength classification number when tightening parts with a bolt and nut.

Example: Bolt = 4T

Nut = 4N or more

SS0ZT-01

SPECIFIED TORQUE FOR STANDARD BOLTS

Class	Diameter mm	Pitch mm	Specified torque					
			Hexagon head bolt			Hexagon flange bolt		
			N·m	kgf·cm	ft·lbf	N·m	kgf·cm	ft·lbf
4T	6	1	5	55	48 in.·lbf	6	60	52 in.·lbf
	8	1.25	12.5	130	9	14	145	10
	10	1.25	26	260	19	29	290	21
	12	1.25	47	480	35	53	540	39
	14	1.5	74	760	55	84	850	61
	16	1.5	115	1,150	83	-	-	-
5T	6	1	6.5	65	56 in.·lbf	7.5	75	65 in.·lbf
	8	1.25	15.5	160	12	17.5	175	13
	10	1.25	32	330	24	36	360	26
	12	1.25	59	600	43	65	670	48
	14	1.5	91	930	67	100	1,050	76
	16	1.5	140	1,400	101	-	-	-
6T	6	1	8	80	69 in.·lbf	9	90	78 in.·lbf
	8	1.25	19	195	14	21	210	15
	10	1.25	39	400	29	44	440	32
	12	1.25	71	730	53	80	810	59
	14	1.5	110	1,100	80	125	1,250	90
	16	1.5	170	1,750	127	-	-	-
7T	6	1	10.5	110	8	12	120	9
	8	1.25	25	260	19	28	290	21
	10	1.25	52	530	38	58	590	43
	12	1.25	95	970	70	105	1,050	76
	14	1.5	145	1,500	108	165	1,700	123
	16	1.5	230	2,300	166	-	-	-
8T	8	1.25	29	300	22	33	330	24
	10	1.25	61	620	45	68	690	50
	12	1.25	110	1,100	80	120	1,250	90
9T	8	1.25	34	340	25	37	380	27
	10	1.25	70	710	51	78	790	57
	12	1.25	125	1,300	94	140	1,450	105
10T	8	1.25	38	390	28	42	430	31
	10	1.25	78	800	58	88	890	64
	12	1.25	140	1,450	105	155	1,600	116
11T	8	1.25	42	430	31	47	480	35
	10	1.25	87	890	64	97	990	72
	12	1.25	155	1,600	116	175	1,800	130

SF0ZZ-02

COMPONENTS

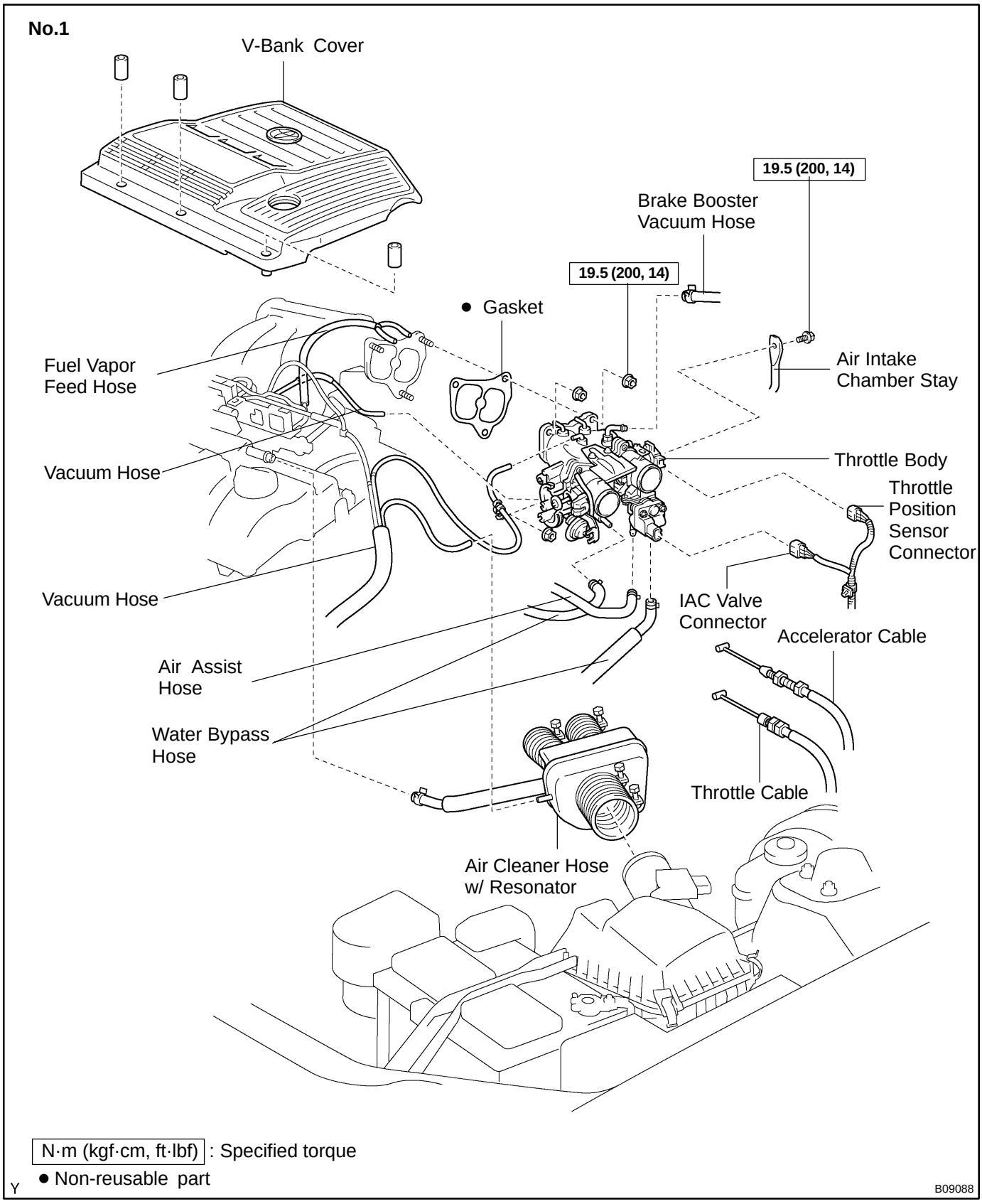

No.1

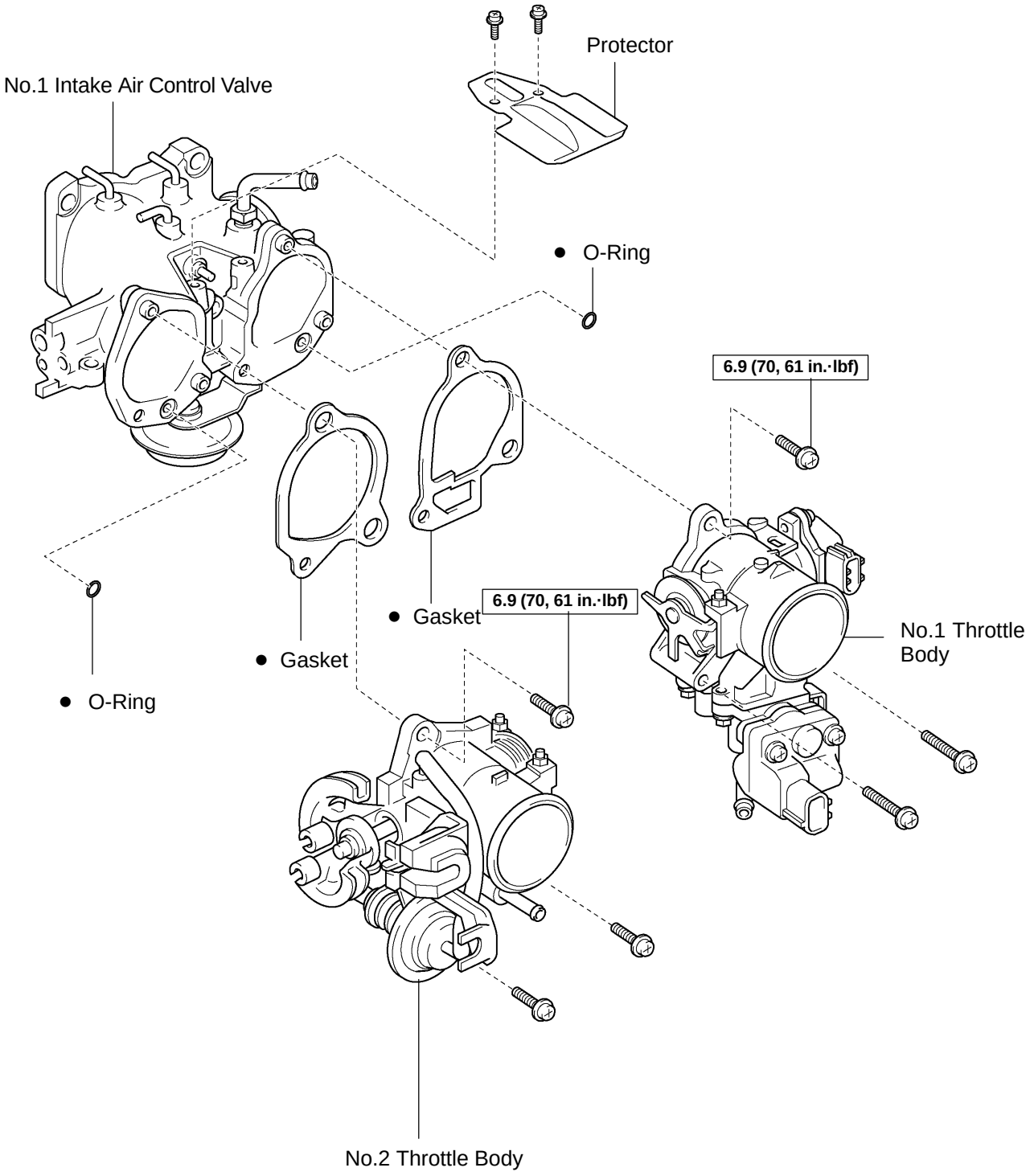

N·m (kgf·cm, ft·lbf) : Specified torque
● Non-reusable part

Y

B09124

No.2

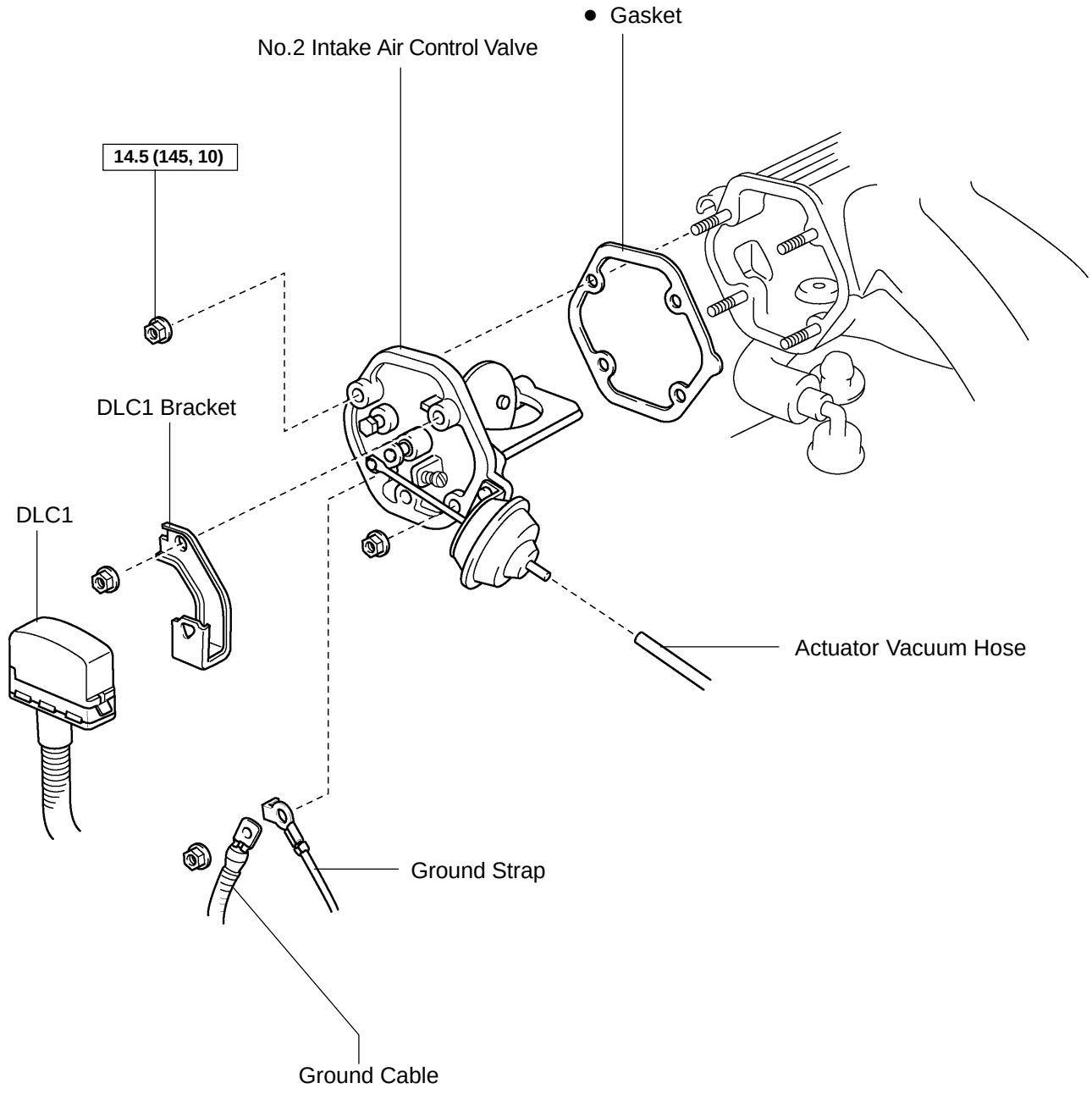

N·m (kgf·cm, ft·lbf): Specified torque

Y ● Non-reusable part

B06500

SF06E-03

INSPECTION

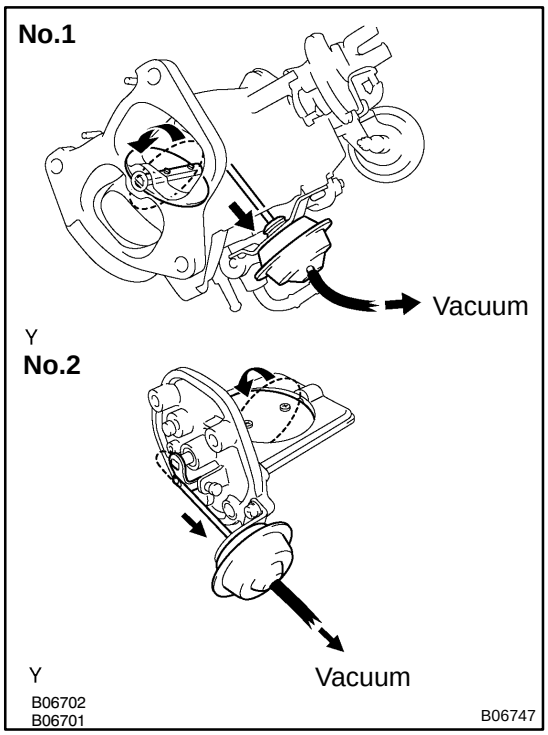

1. INSPECT INTAKE AIR CONTROL VALVE

(a) With 26.7 kPa (200 mmHg, 7.9 in.Hg) of vacuum applied to the actuator, check that the actuator rod moves.

(b) One minute after applying the vacuum in (a), check that the actuator rod does not return.

If the operation is not as specified, replace the intake air control valve.

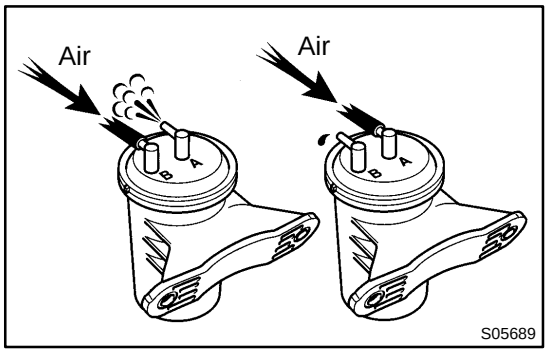

2. INSPECT VACUUM TANK

LOCATION: The LH side member under the battery tray.

(a) Check that air flows from port B to port A.

(b) Check that air does not flow from port A to port B.

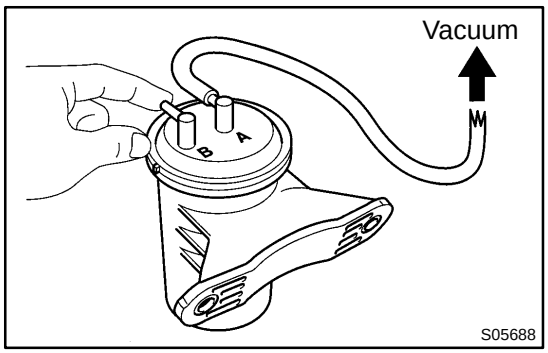

(c) Plug port B with your finger, and apply 26.7 kPa (200 mmHg, 7.9 in.Hg) of vacuum to port A, and check that there is no change is vacuum after one minute.

If the operation is not as specified, replace the vacuum tank.

3. INSPECT VSV (See page SF-68)

SF06F-03

INSTALLATION

1. INSTALL NO.1 INTAKE AIR CONTROL VALVE
(See pages SF-40 and SF-42)

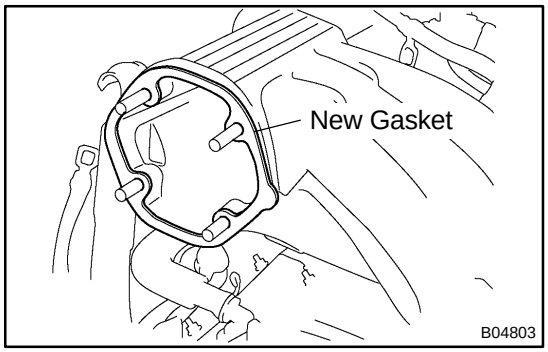

2. INSTALL NO.2 INTAKE AIR CONTROL VALVE

(a) Install the No.2 intake air control valve.

(1) Install a new gasket to the air intake chamber.

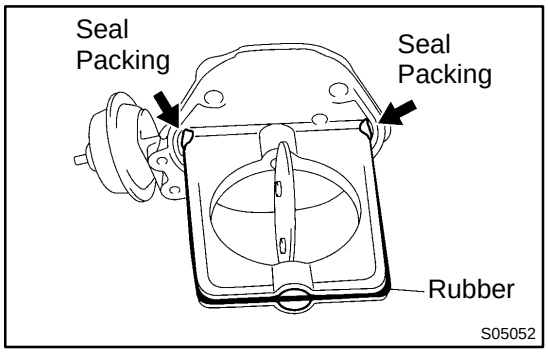

(2) Apply a light coat of engine oil to the rubber portions.

(3) Apply seal packing to the positions of the intake air control valve shown in the illustration.

Seal packing: Part No. 08826-00080 or equivalent

(4) Install the intake air control valve, DLC1 bracket, ground strap and cable with the 4 nuts.

Torque: 14.5 N·m (145 kgf·cm, 10 ft·lbf)

(b) Connect the DLC1.

(c) Connect the actuator vacuum hose.

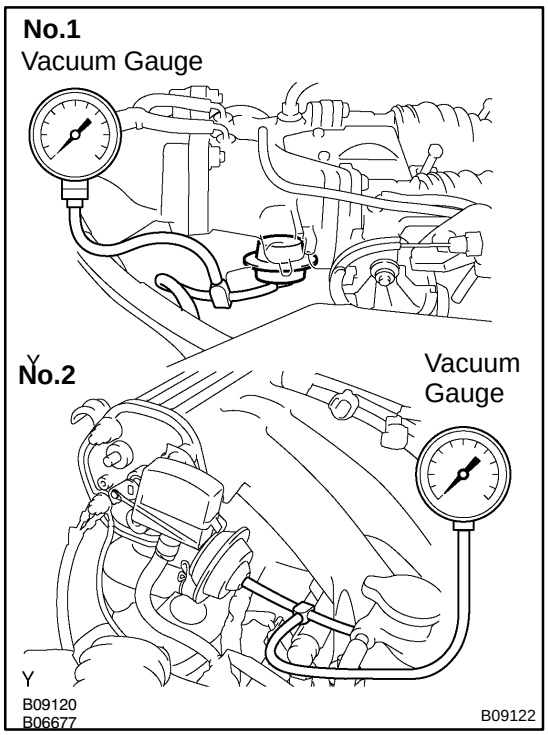

ACOUSTIC CONTROL INDUCTION SYSTEM (ACIS)

SF06B-05

ON-VEHICLE INSPECTION

INSPECT INTAKE AIR CONTROL VALVE

(a) Using a 3-way connector, connect vacuum gauge to the actuator hose.

(b) Start the engine.

(c) While the engine is idling, check that the vacuum gauge needle does not move.

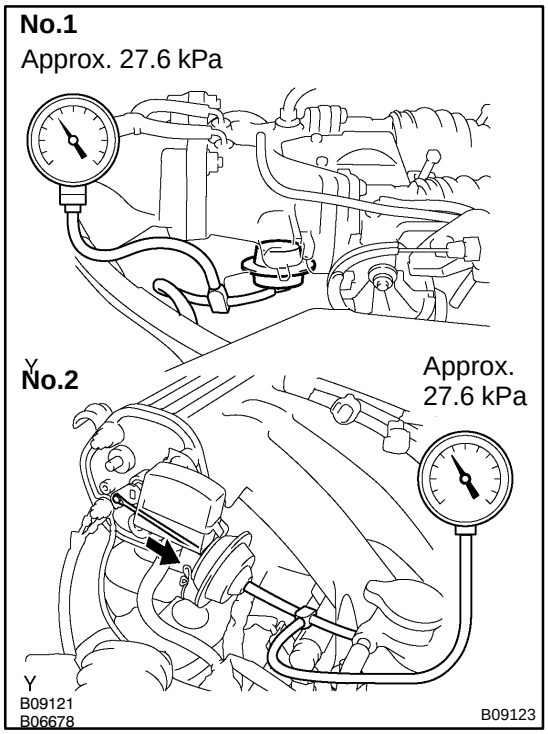

(d) Rapidly depress the accelerator pedal to fully open position and check that the vacuum gauge needle momentarily fluctuates up to approx. 26.7 kPa (200 mmHg, 7.9 in.Hg). (The actuator rod is pulled out.)

SF06D-03

REMOVAL

1. REMOVE NO.1 INTAKE AIR CONTROL VALVE (See pages SF-36 and SF-40)

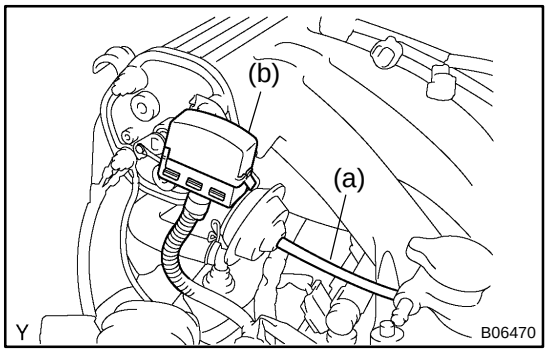

2. REMOVE NO.2 INTAKE AIR CONTROL VALVE

(a) Disconnect the actuator vacuum hose.

(b) Disconnect the DLC1 from the DLC1 bracket.

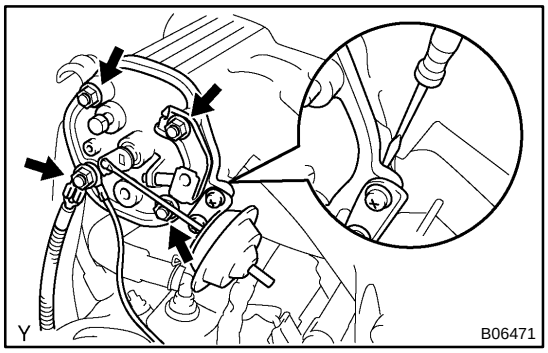

(c) Remove the intake air control valve.

(1) Remove the 4 nuts and DLC1 bracket, and disconnect the ground strap and cable.

(2) Remove the intake air control valve by prying a screwdriver between the intake air control valve and air intake chamber.

(3) Remove the gasket.

AIR-FUEL RATIO (A/F) SENSOR

SF103-01

COMPONENTS

Bank 1 Sensor 1

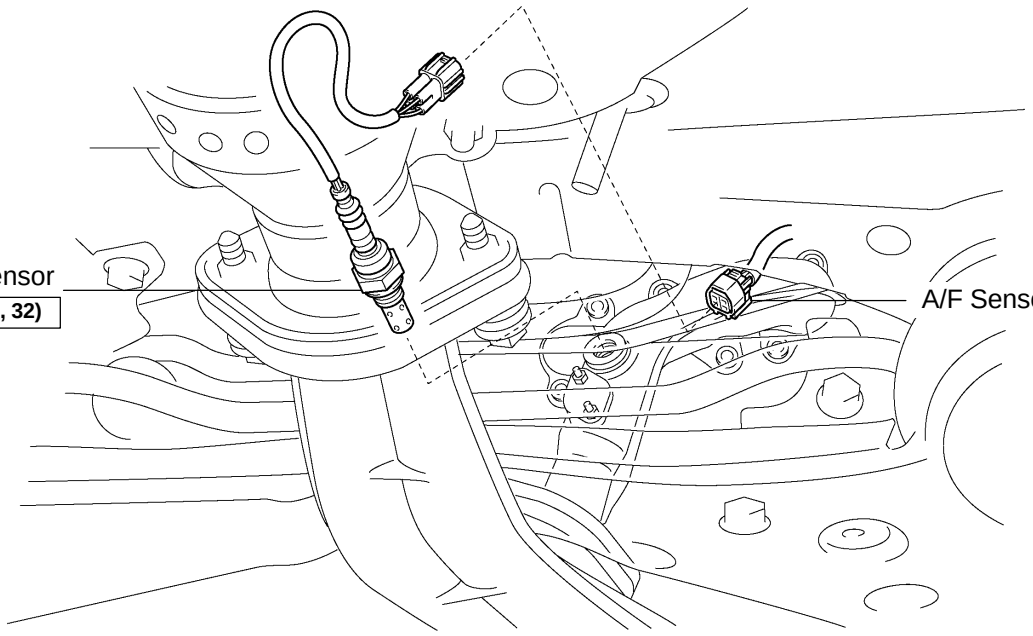

Y N·m (kgf·cm, ft·lbf) : Specified torque

B06683

Bank 2 Sensor 1

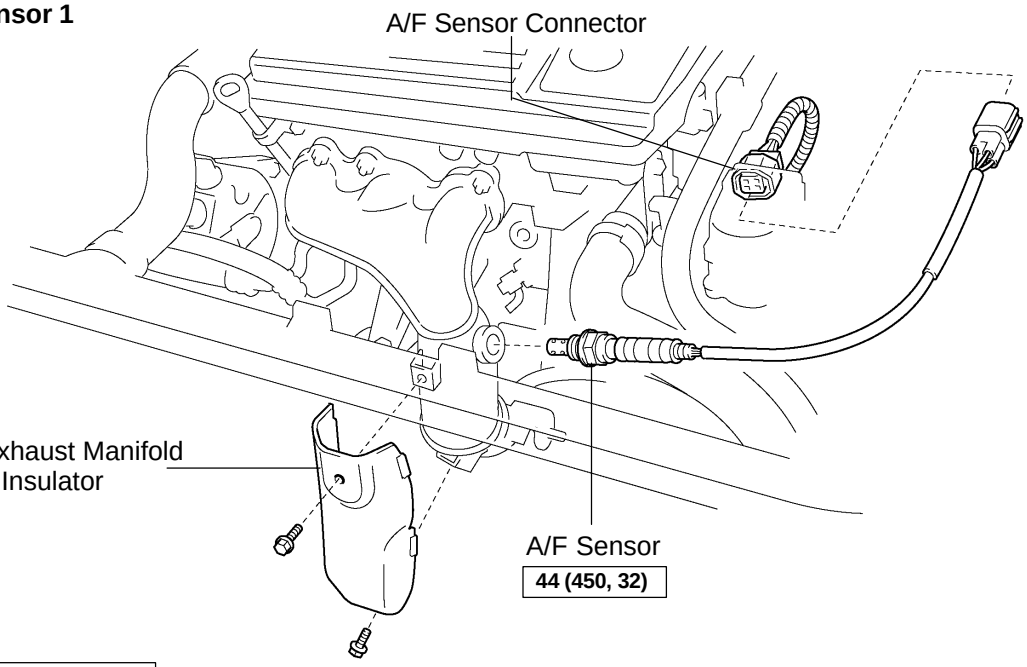

Y N·m (kgf·cm, ft·lbf) : Specified torque

B06681

SF104-01

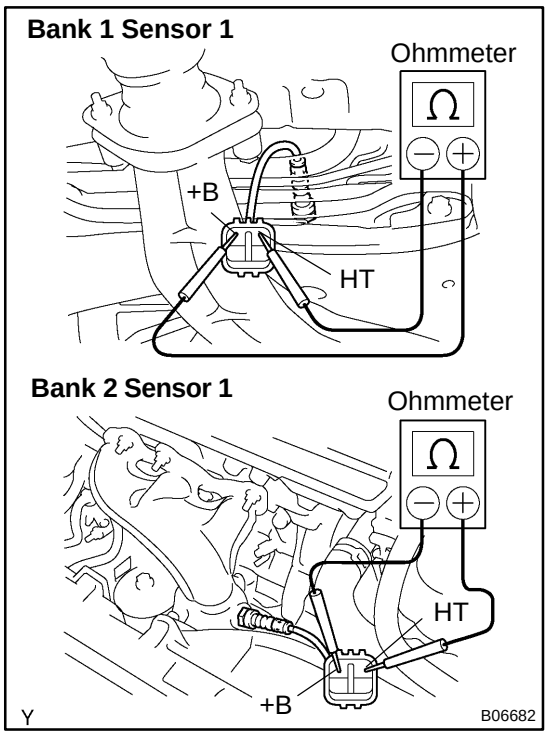

INSPECTION

INSPECT HEATER RESISTANCE OF A/F SENSORS (Bank 1 sensor 1, Bank 2 Sensor 1)

(a) Disconnect the A/F sensor connector.

(b) Using an ohmmeter measure the resistance between terminals +B and HT.

Resistance:

At 20˚C (68˚F)	0.8 - 1.4 Ω
At 800˚C (1,472˚F)	1.8 - 3.2 Ω

If the resistance is not as specified, replace the sensor.

Torque: 44 N·m (450 kgf·cm, 32 ft·lbf)

(c) Reconnect the A/F sensor connector.

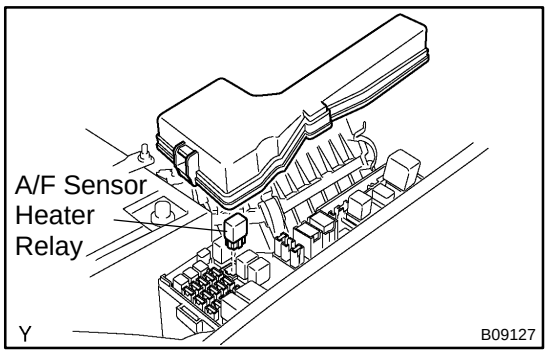

A/F SENSOR HEATER RELAY

SF16D-01

INSPECTION

1. REMOVE RELAY BOX COVER

2. REMOVE A/F SENSOR HEATER RELAY (Marking: A/F HTR)

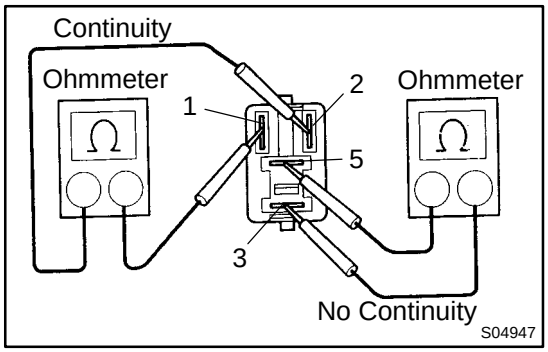

3. INSPECT A/F SENSOR HEATER RELAY CONTINUITY

(a) Using an ohmmeter, check that there is continuity between terminals 1 and 2.

If there is no continuity, replace the relay.

(b) Check that there is no continuity between terminals 3 and 5.

If there is continuity, replace the relay.

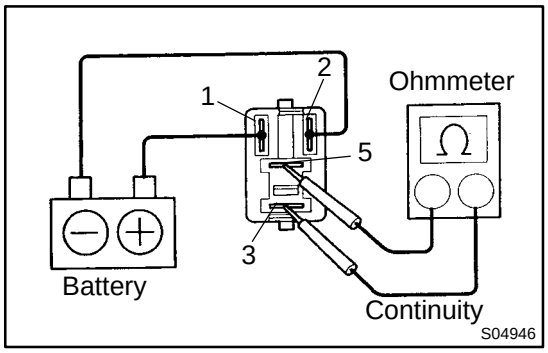

4. INSPECT A/F SENSOR HEATER RELAY OPERATION

(a) Apply battery voltage across terminals 1 and 2.

(b) Using an ohmmeter, check that there is continuity between terminals 3 and 5.

If there is no continuity, replace the relay.

5. REINSTALL A/F SENSOR HEATER RELAY

6. REINSTALL RELAY BOX COVER

CIRCUIT OPENING RELAY

COMPONENTS

SF0MD-02

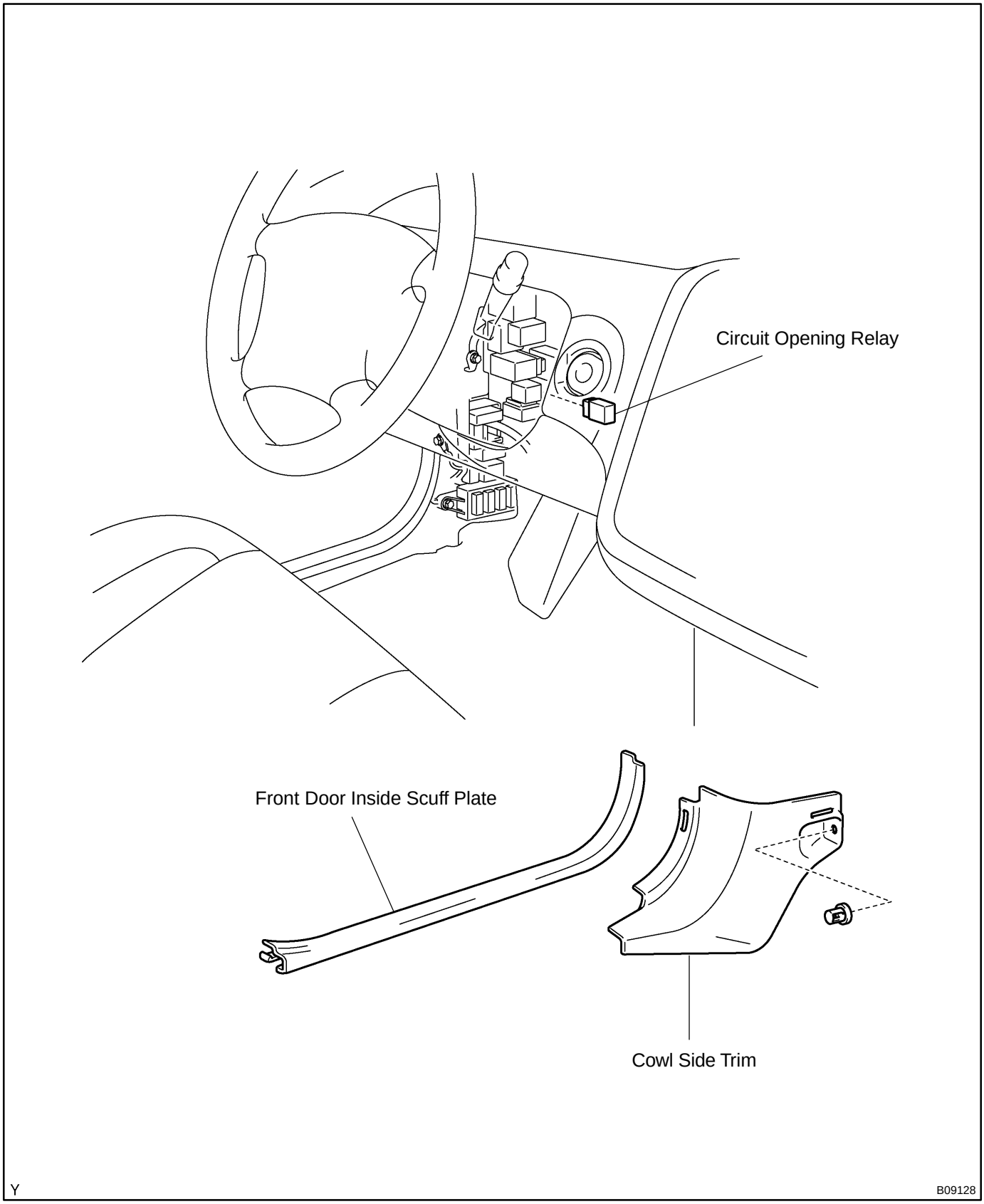

SF16E-01

INSPECTION

1. REMOVE CIRCUIT OPENING RELAY

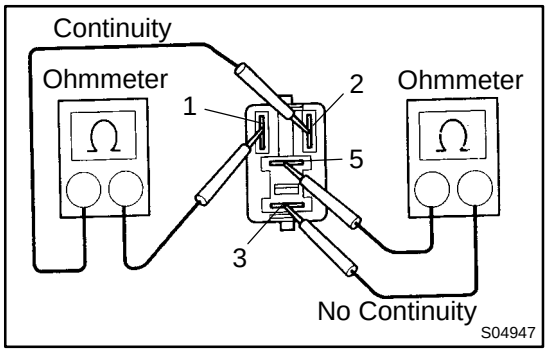

2. INSPECT CIRCUIT OPENING RELAY CONTINUITY

(a) Using an ohmmeter, check that there is continuity between terminals 1 and 2.

If there is no continuity, replace the relay.

(b) Check that there is no continuity between terminals 3 and 5.

If there is continuity, replace the relay.

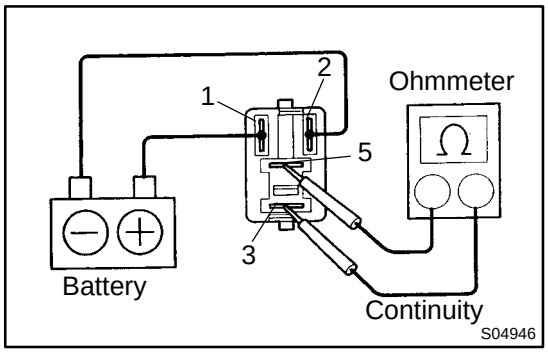

3. INSPECT CIRCUIT OPENING RELAY OPERATION

(a) Apply battery voltage across terminals 1 and 2.

(b) Using an ohmmeter, check that there is continuity between terminals 3 and 5.

If there is no continuity, replace the relay.

4. REINSTALL CIRCUIT OPENING RELAY

SF0SM-05

COMPONENTS

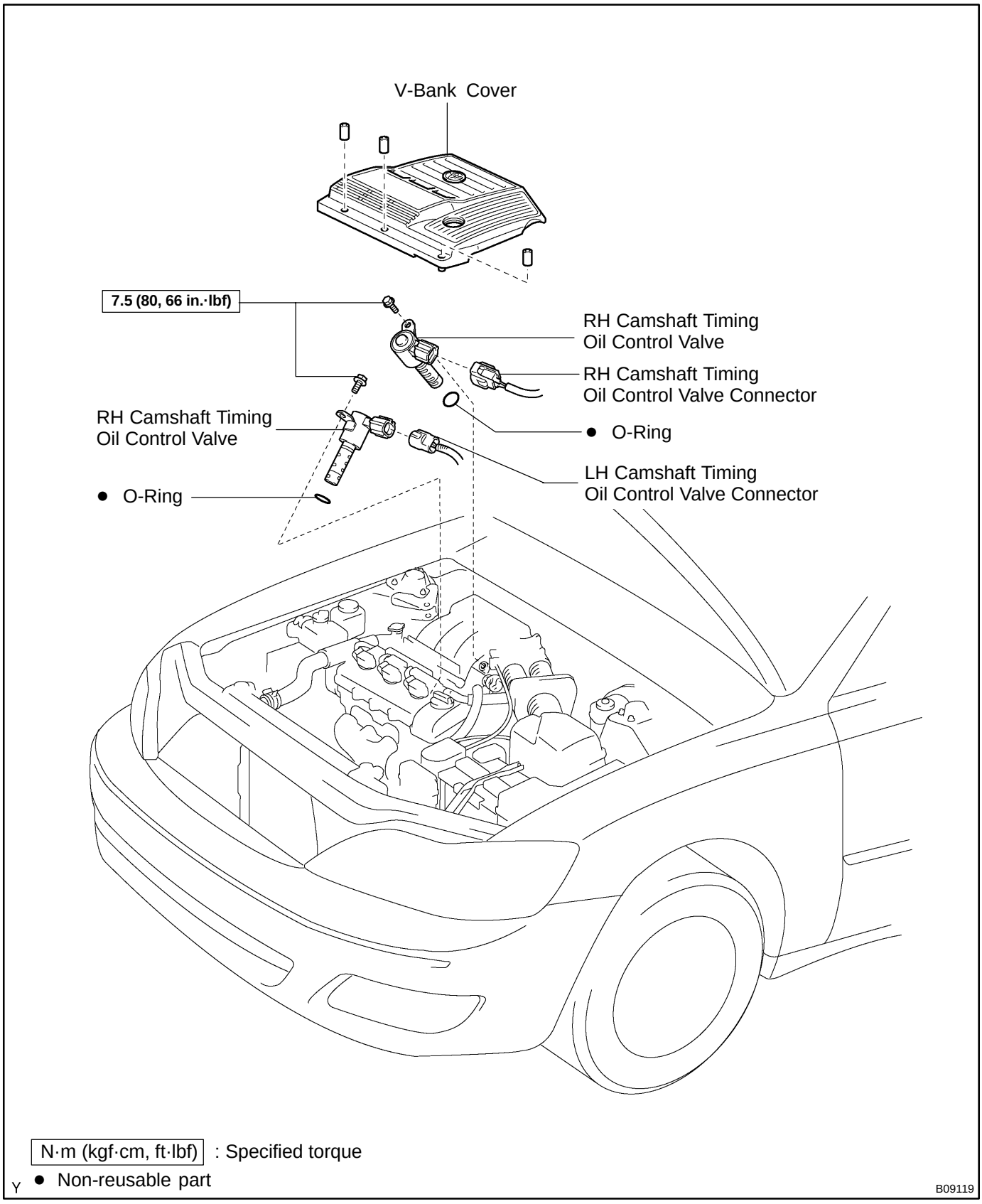

SF0SO-03

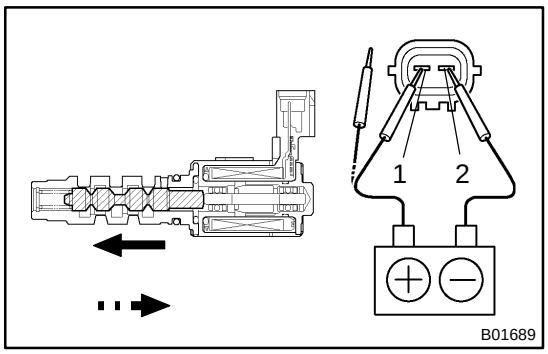

INSPECTION

INSPECT CAMSHAFT OIL CONTROL VALVE OPERATION

Connect the positive (+) lead from the battery to terminal 1 and negative (-) lead to terminal 2, and check the movement of the valve.

Battery positive voltage is applied	Valve moves in ← direction
Battery positive voltage is cut off	Valve moves in ⇢ direction

If operation is not as specified, replace the valve.

SF0SP-06

INSTALLATION

Installation is in the reverse order of removal (See page SF-50).

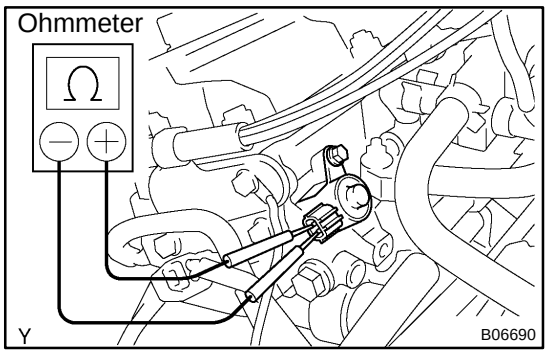

CAMSHAFT TIMING OIL CONTROL VALVE

SF0SL-03

ON-VEHICLE INSPECTION

INSPECT OIL CONTROL VALVE RESISTANCE

(a) Remove the V-bank cover.
(b) Disconnect the oil control valve connector.
(c) Using an ohmmeter, measure the resistance between the terminals.

Resistance: 6.9 - 7.9 Ω at 20˚C (68˚F)

If the resistance is not as specified, replace the valve.

(d) Reconnect the oil control valve connector.
(e) Reinstall the V-bank cover.

SF0ZY-03

REMOVAL

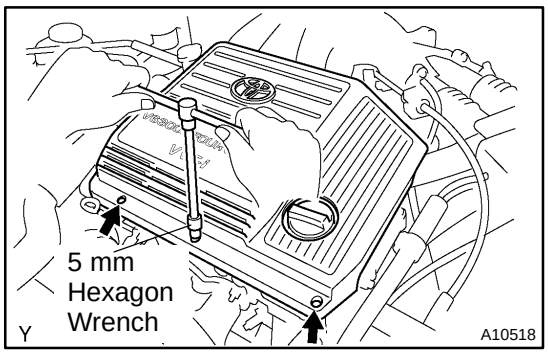

1. REMOVE V-BANK COVER

(a) Using a 5 mm hexagon wrench, remove the 3 cap nuts.

(b) Loosen the V-bank cover fastener counterclockwise.

HINT:

At the time of installation, please refer to the following items.

Press down the V-bank cover fastener.

(c) Remove the V-bank cover.

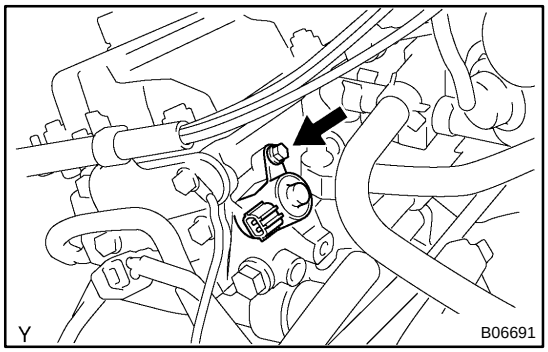

2. REMOVE CAMSHAFT TIMING OIL CONTROL VALVES

(a) Disconnect the 2 camshaft oil control valve connectors.

(b) Remove the bolt, camshaft oil control valve and O-ring. Remove the 2 camshaft oil control valves.

Torque: 7.5 N·m (80 kgf·cm, 66 in.·lbf)

(c) Remove the O-ring from the each camshaft oil control valve.

HINT:

At the time of installation, please refer to the following items.

Use a new O-ring.

ENGINE CONTROL MODULE (ECM)

COMPONENTS

SF0MX-02

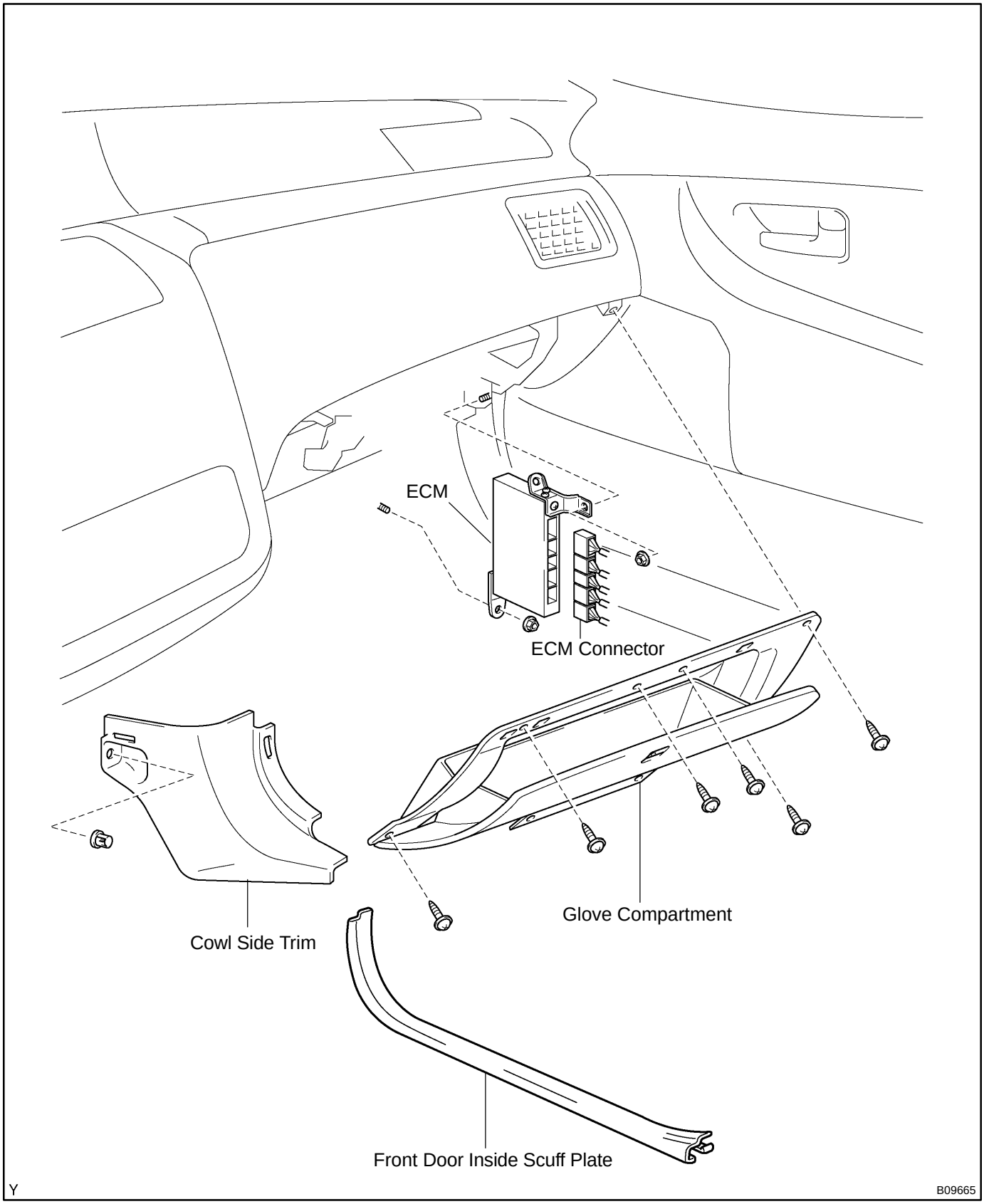

SF0MY-01

INSPECTION

1. REMOVE ECM
2. INSPECT ECM (See page DI-20)
3. REINSTALL ECM

ENGINE COOLANT TEMPERATURE (ECT) SENSOR

SF06Q-05

INSPECTION

1. DRAIN ENGINE COOLANT

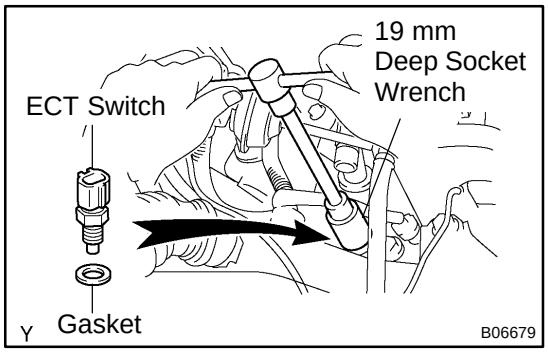

2. REMOVE ECT SENSOR

(a) Disconnect the ECT sensor connector.

(b) Using a 19 mm deep socket wrench, remove the ECT sensor and gasket.

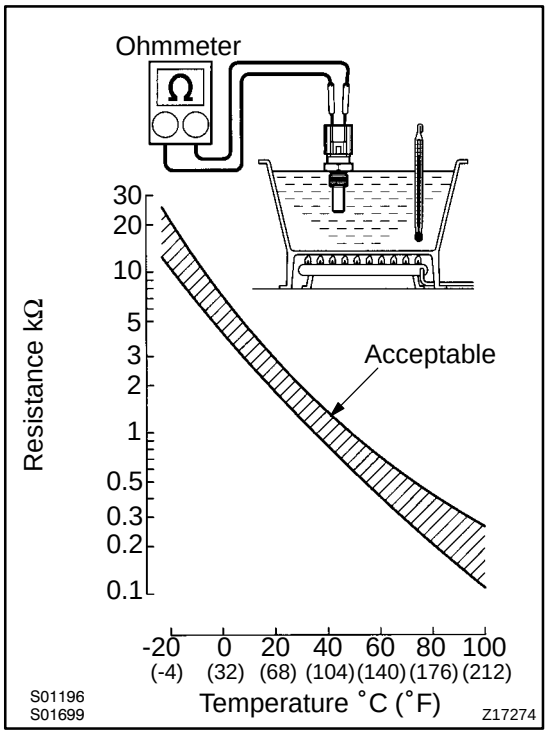

3. INSPECT ECT SENSOR

Using an ohmmeter, measure the resistance between the terminals.

Resistance: Refer to the graph

If the resistance is not as specified, replace the ECT sensor.

4. REINSTALL ECT SENSOR

(a) Install a new gasket to the ECT sensor.

(b) Using a 19 mm deep socket, install the ECT sensor.

Torque: 20 N·m (200 kgf·cm, 14 ft·lbf)

(c) Connect the ECT sensor connector.

5. REFILL WITH ENGINE COOLANT

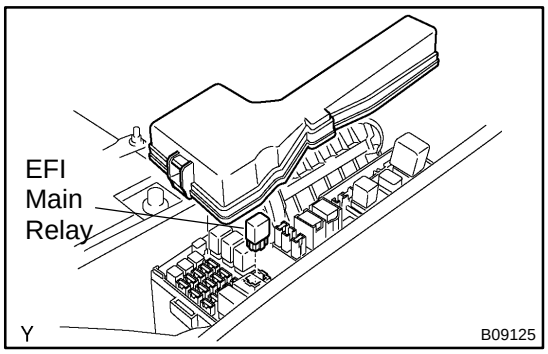

EFI MAIN RELAY

SF16C-01

INSPECTION

1. REMOVE RELAY BOX COVER

2. REMOVE EFI MAIN RELAY (Marking: EFI)

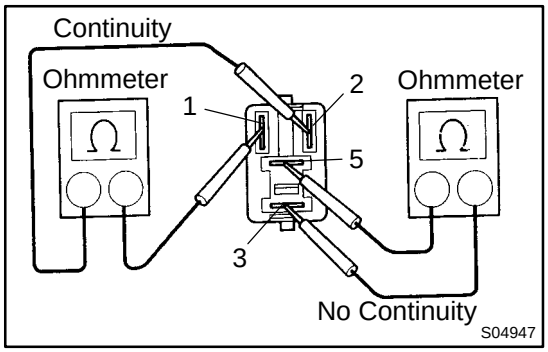

3. INSPECT EFI MAIN RELAY CONTINUITY

(a) Using an ohmmeter, check that there is continuity between terminals 1 and 2.

If there is no continuity, replace the relay.

(b) Check that there is no continuity between terminals 3 and 5.

If there is continuity, replace the relay.

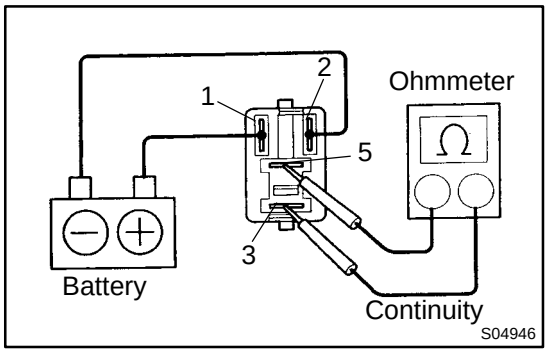

4. INSPECT EFI MAIN RELAY OPERATION

(a) Apply battery voltage across terminals 1 and 2.

(b) Using an ohmmeter, check that there is continuity between terminals 3 and 5.

If there is no continuity, replace the relay.

5. REINSTALL EFI MAIN RELAY

6. REINSTALL RELAY BOX COVER

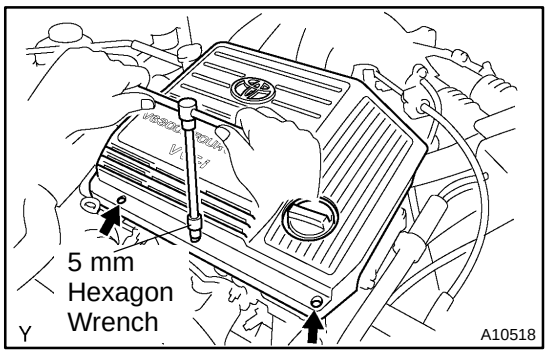

FUEL CUT RPM

SF071-05

INSPECTION

1. REMOVE V-BANK COVER

(a) Using a 5 mm hexagon wrench, remove the 3 cap nuts.

(b) Loosen the V-bank cover fastener counterclockwise.

(c) Remove the V-bank cover.

2. WARM UP ENGINE

Allow the engine to warm up to normal operating temperature.

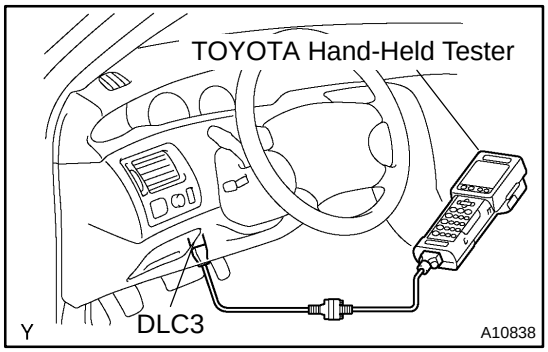

3. CONNECT LEXUS HAND-HELD TESTER OR OBDII SCAN TOOL

(a) Connect the TOYOTA hand-held tester or OBDII scan tool to the DLC3.

(b) Please refer to the TOYOTA hand-held tester or OBDII scan tool operator's manual for further details.

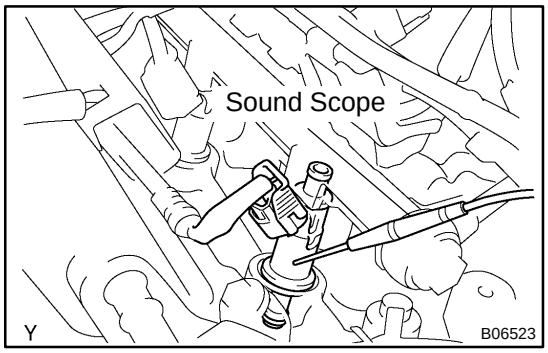

4. INSPECT FUEL CUT OFF PRM

(a) Increase the engine speed to at least 3,500 rpm.

(b) Use a sound scope to check for injector operating noise.

(c) Check that when the throttle lever is released, injector operation noise stops momentarily and then resumes.

HINT:

Measure with the A/C OFF.

Fuel return rpm: 1,200 rpm

5. DISCONNECT LEXUS HAND-HELD TESTER OR OBDII SCAN TOOL

6. REINSTALL V-BANK COVER

(a) Using 5 mm hexagon wrench, install the V-bank cover with the 3 cap nuts.

(b) Press down the V-bank cover fastener.

FUEL PRESSURE REGULATOR

COMPONENTS

SF0LJ-02

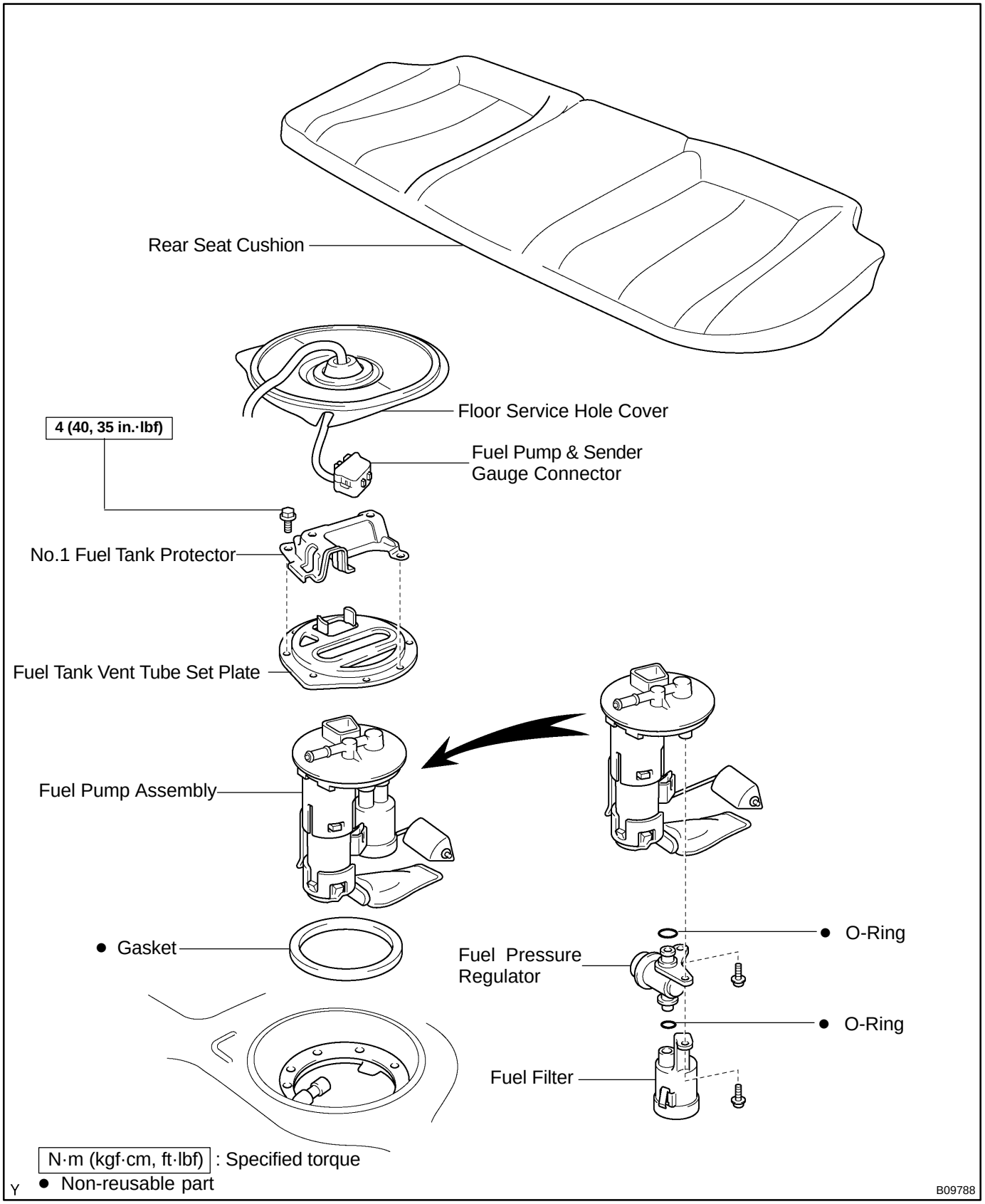

SF0LL-01

INSTALLATION

Installation is in the reverse order of removal (See page SF-17).

SF0LK-01

REMOVAL

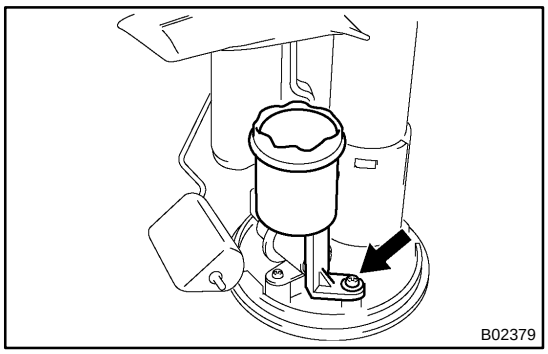

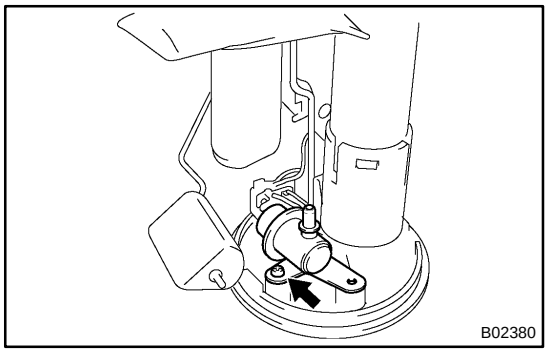

1. REMOVE FUEL PUMP ASSEMBLY FROM FUEL TANK (See page SF-11)

2. REMOVE FUEL FILTER

(a) Remove the screw, and pull out the fuel filter.
Torque: 2.0 N·m (20 kgf·cm, 17 in.·lbf)

(b) Remove the O-ring from the fuel filter.

HINT:

At the time of installation, please refer to the following items. Apply a light coat of gasoline to a new O-ring, and install it to the fuel filter.

3. REMOVE FUEL PRESSURE REGULATOR

(a) Remove the screw, and pull out the pressure regulator.
Torque: 2.0 N·m (20 kgf·cm, 17 in.·lbf)

(b) Remove the O-ring from the pressure regulator.

HINT:

At the time of installation, please refer to the following items. Apply a light coat of gasoline to a new O-ring, and install it to the pressure regulator.

FUEL TANK AND LINE

SF0LR-02

COMPONENTS

CAUTION:

- **Always use new gaskets when replacing the fuel tank or component parts.**
- **Apply the proper torque to all parts tightened.**

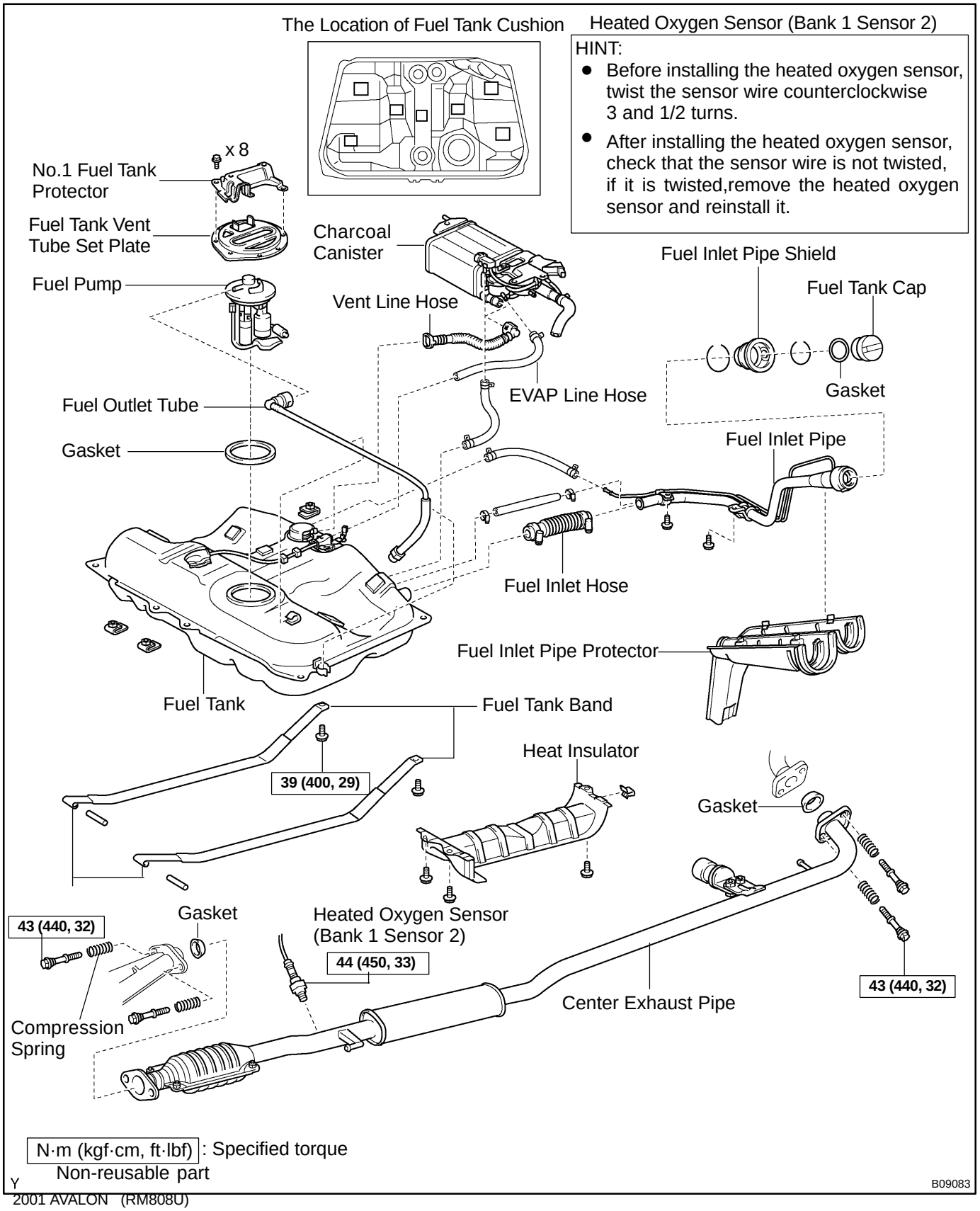

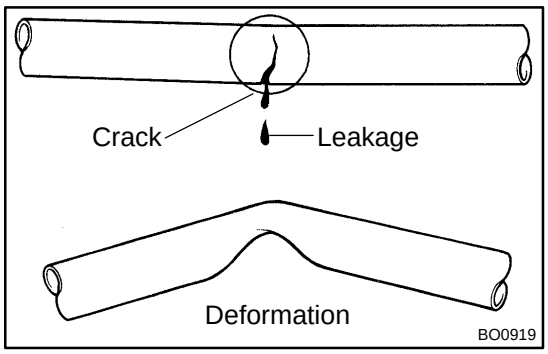

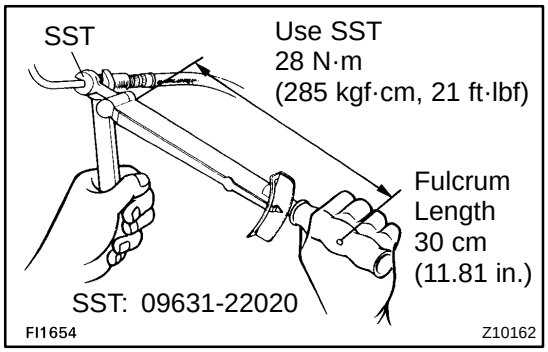

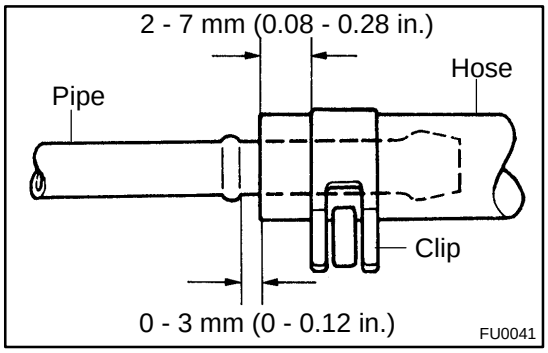

SF0LS-01

INSPECTION

INSPECT FUEL TANK AND LINE

(a) Check the fuel lines for cracks or leakage, and all connections for deformation.

(b) Check the fuel tank vapor vent system hoses and connections for looseness, sharp bends or damage.

(c) Check the fuel tank for deformation, cracks, fuel leakage or tank band looseness.

(d) Check the filler neck for damage or fuel leakage.

(e) Hose and pipe connections are as shown in the illustration.

If a problem is found, repair or replace the parts as necessary.

SF0LE-02

COMPONENTS

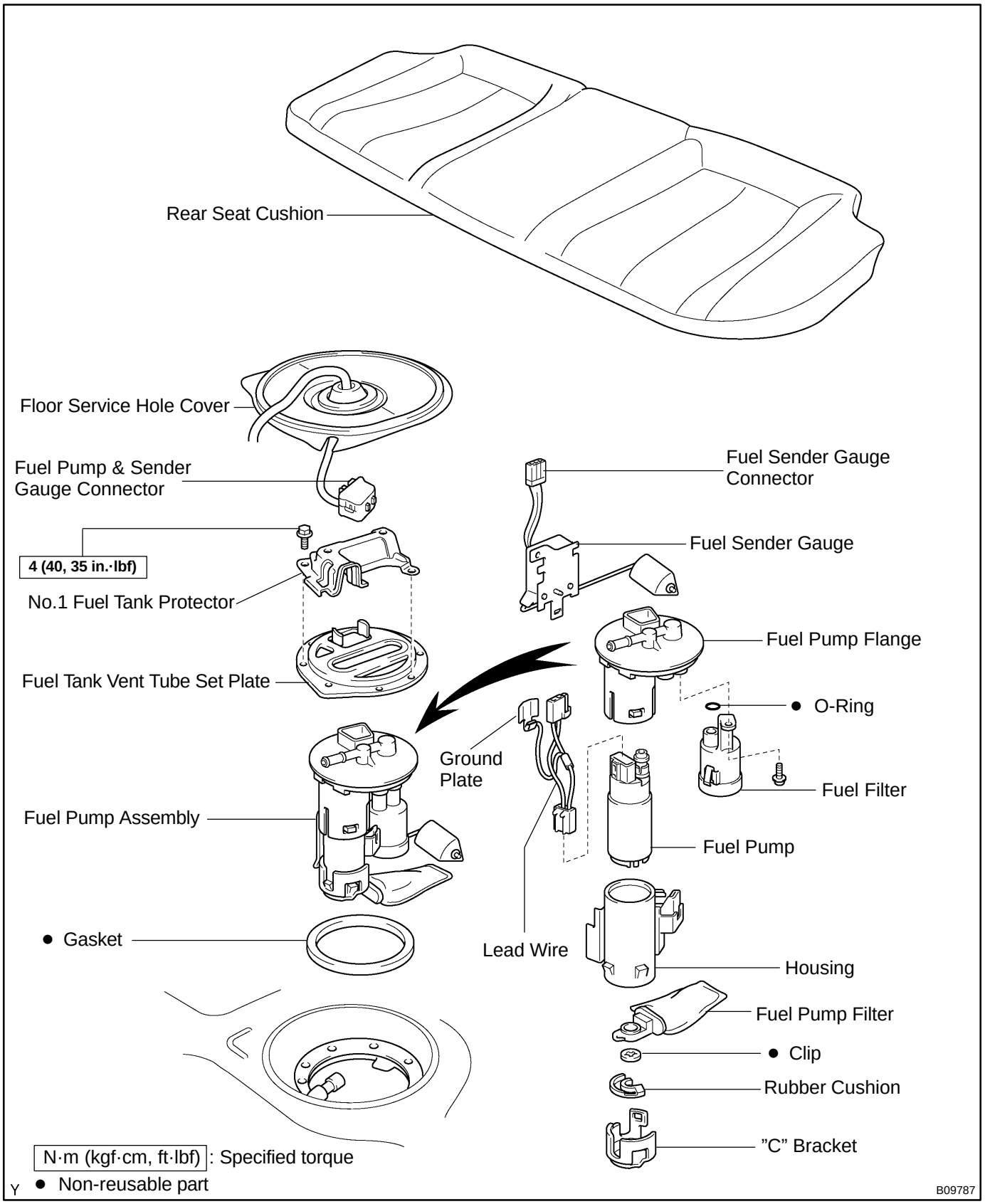

SF0LG-01

DISASSEMBLY

1. DISCONNECT FUEL PUMP CONNECTOR

2. DISCONNECT GROUND PLATE

3. DISCONNECT FUEL SENDER GAUGE CONNECTOR

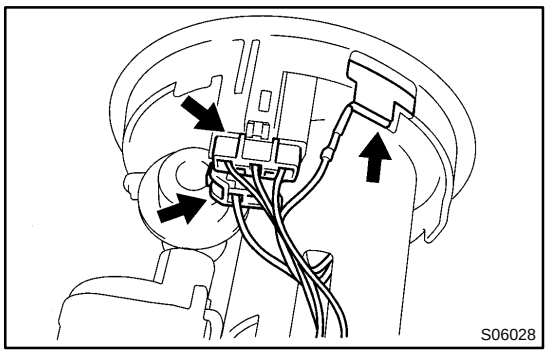

4. REMOVE FUEL SENDER GAUGE

Push down the portion of A with a finger, and push up the sender gauge.

NOTICE:

Be careful that the arm of the sender gauge should not bend.

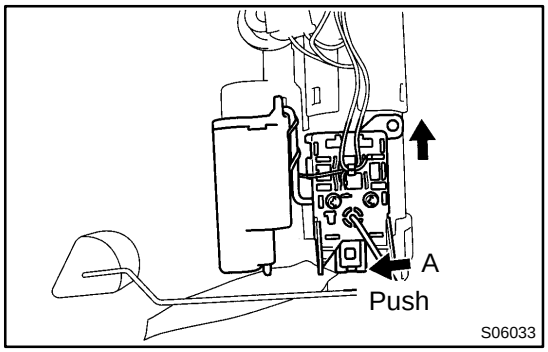

5. REMOVE FUEL FILTER

(a) Remove the screw, and pull out the fuel filter.

(b) Remove the O-ring from the fuel filter.

HINT:

At the time of installation, please refer to the following items. Install the pump filter with a new clip.

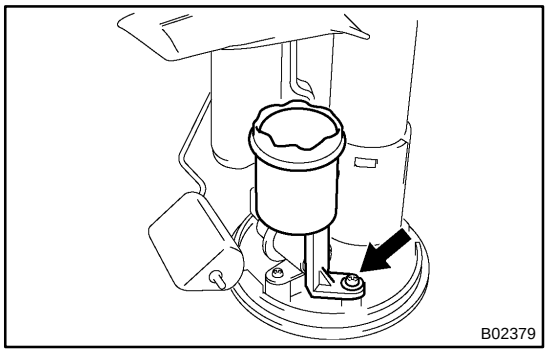

6. REMOVE FUEL PUMP FLANGE

Using a screwdriver, remove the snap fit portion in the order of 1, 2 and 3 as shown in the illustration.

HINT:

At the time of installation, please refer to the following items. Apply a light coat of gasoline to a new O-ring, and install it to the fuel filter.

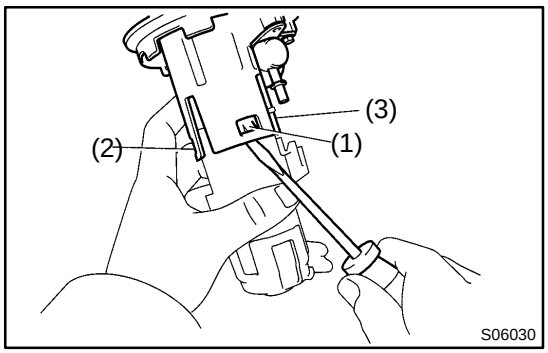

7. REMOVE FUEL PUMP LEAD WIRE

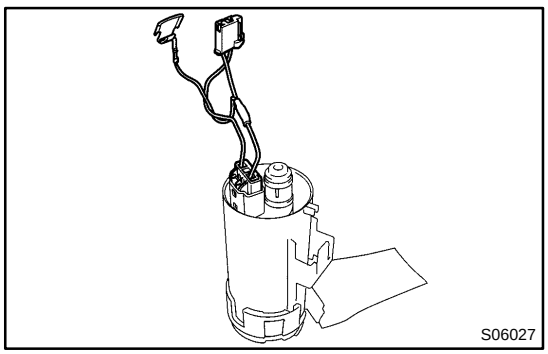

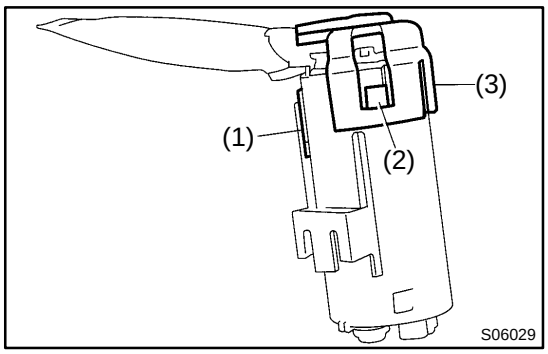

8. REMOVE "C" BRACKET, RUBBER CUSHION AND FUEL PUMP

Using a screwdriver, remove the snap fit portion in the order of 1, 2 and 3 as shown in the illustration.

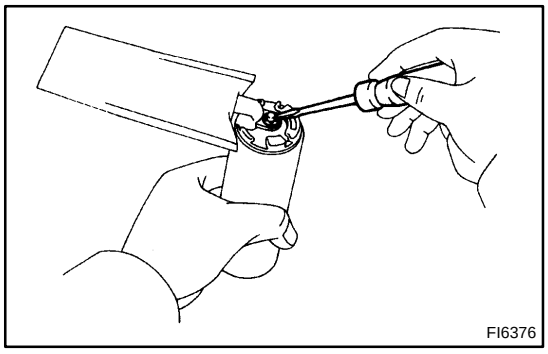

9. REMOVE FUEL PUMP FILTER FROM FUEL PUMP

(a) Using a small screwdriver, remove the clip.

(b) Pull out the pump filter.

HINT:

At the time of installation, please refer to the following items. Install the pump filter with a new clip.

SF0LI-01

INSTALLATION

Installation is in the reverse order of removal (See page SF-1 1).

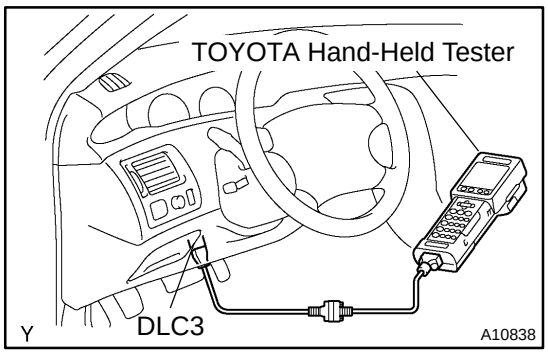

FUEL PUMP

SF0LD-02

ON-VEHICLE INSPECTION

1. CHECK FUEL PUMP OPERATION

(a) Connect a TOYOTA hand-held tester to the DLC3.

(b) Turn the ignition switch ON and TOYOTA hand-held tester main switch ON.

NOTICE:

Do not start the engine.

(c) Select the active test mode on the TOYOTA hand-held tester.

(d) Please refer to the TOYOTA hand-held tester operator's manual for further details.

(e) If you have no TOYOTA hand-held tester, connect the positive (+) and negative (-) leads from the battery to the fuel pump connector (See step 7).

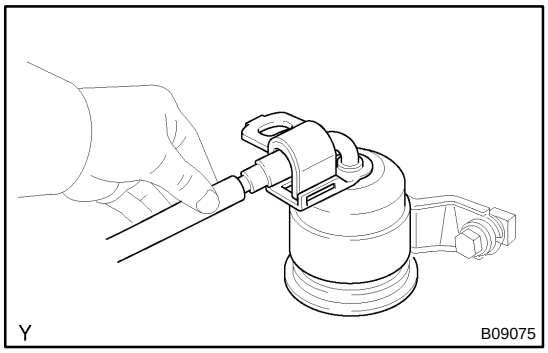

(f) Check that there is pressure in the fuel inlet hose from the fuel filter.

HINT:

If there is fuel pressure, you will hear the sound of fuel flowing.

If there is no pressure, check these parts:

- Fusible link
- Fuses
- EFI main relay
- Fuel pump
- ECM
- Wiring connections

(g) Turn the ignition switch to LOCK.

(h) Disconnect the TOYOTA hand-held tester from the DLC3.

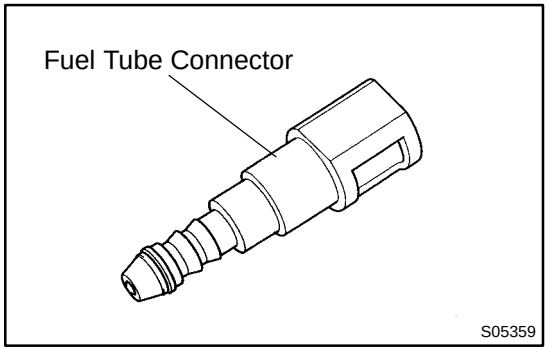

2. CHECK FUEL PRESSURE

(a) Check the battery positive voltage is above 12 V.

(b) Disconnect the negative (-) terminal cable from the battery.

(c) Purchase the new No.1 fuel pipe and take out the fuel tube connector from its pipe.
Part No. 23801-20070

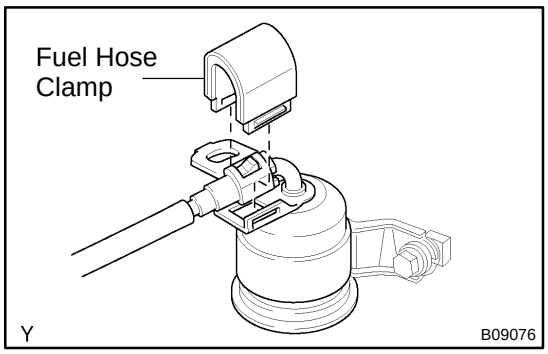

(d) Remove the fuel hose clamp.

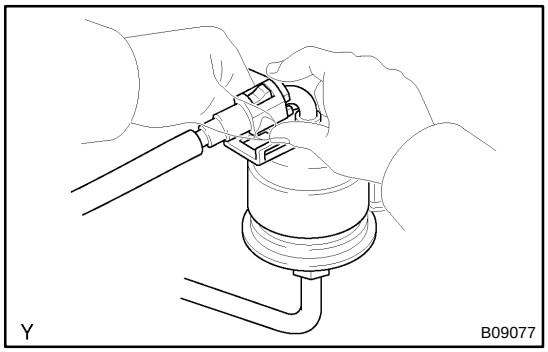

(e) Disconnect the No.1 fuel pipe (fuel tube connector) from the fuel filter outlet.

CAUTION:

- **Perform disconnecting operations of the fuel tube connector (quick type) after observing the precautions (See page SF-1).**
- **As there is retained pressure in the fuel pipe line, prevent it from splashing inside the engine compartment.**

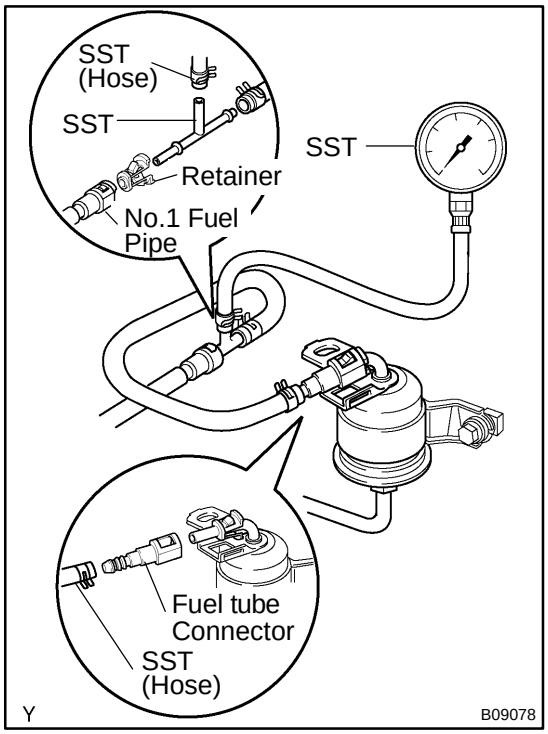

(f) Install SST (pressure gauge) as shown in the illustration by using SST and fuel tube connector.
SST 09268-41047, 09268-45014

(g) Wipe off any splattered gasoline.

(h) Reconnect the TOYOTA hand-held tester to the DLC3 (See step 1).

(i) Reconnect the negative (-) terminal cable to the battery.

(j) Measure the fuel pressure.
Fuel pressure:
301 - 347 kPa (3.1 - 3.5 kgf/cm^2, 44 - 50 psi)

If pressure is high, replace the fuel pressure regulator.

If pressure is low, check these parts:

- Fuel hoses and connections
- Fuel pump
- Fuel filter
- Fuel pressure regulator

(k) Disconnect the TOYOTA hand-held tester from the DLC3.

(l) Start the engine.

(m) Measure the fuel pressure at idle.
Fuel pressure:
301 - 347 kPa (3.1 - 3.5 kgf/cm^2, 44 - 50 psi)

(n) Stop the engine.

(o) Check that the fuel pressure remains as specified for 5 minutes after the engine has stopped.
Fuel pressure:
147 kPa (1.5 kgf/cm^2, 21 psi) or more

If pressure is not as specified, check the fuel pump, pressure regulator and/or injectors.

(p) After checking fuel pressure, disconnect the negative (-) terminal cable from the battery and carefully remove the SST and fuel tube connector to prevent gasoline from splashing.
SST 09268-41047, 09268-45014

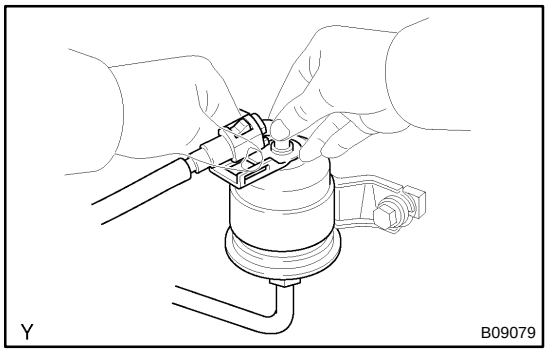

(q) Reconnect the No.1 fuel pipe (fuel tube connector).

CAUTION:

Perform connecting operations of the tube connector (quick type) after observing the precautions (See page SF-1).

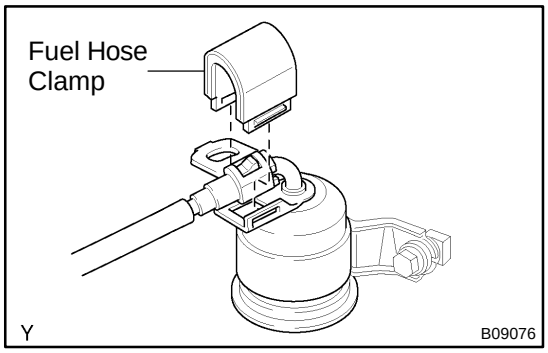

(r) Surely install the hose clamp to the fuel filter with ”click” sound.

(s) After installing the clamp, check that the clamp is fixed by pulling up to the clamp.

(t) Reconnect the negative (-) terminal cable to the battery.

(u) Check for fuel leaks.

3. REMOVE REAR SEAT CUSHION

4. REMOVE FLOOR SERVICE HOLE COVER

5. DISCONNECT FUEL PUMP & SENDER GAUGE CONNECTOR

6. INSPECT FUEL PUMP RESISTANCE

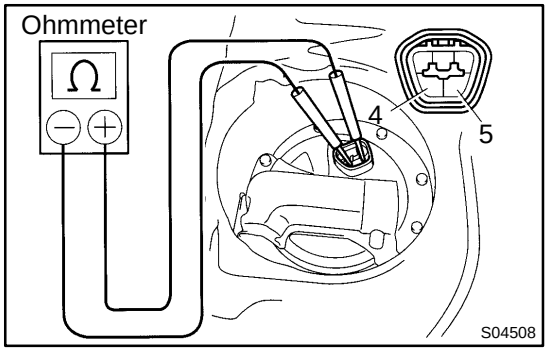

Using an ohmmeter, measure the resistance between terminals 4 and 5.

Resistance: 0.2 - 3.0 Ω at 20˚C (68˚F)

If the resistance is not as specified, replace the fuel pump.

7. INSPECT FUEL PUMP OPERATION

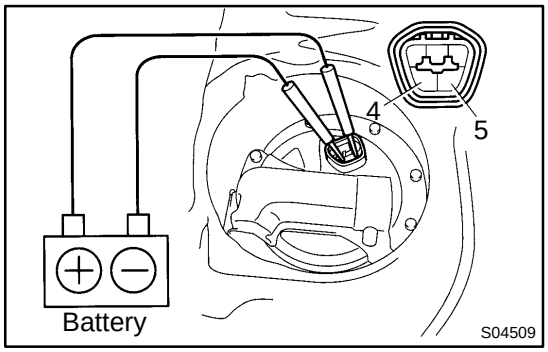

Connect the positive (+) lead from the battery to terminal 4 of the connector, and the negative (-) lead to terminal 5. Check that the fuel pump operates.

NOTICE:

- **These tests must be done quickly (within 10 seconds) to prevent the coil burning out.**
- **Keep the fuel pump as far away from the battery as possible.**
- **Always do the switching at the battery side.**

If operation is not as specified, replace the fuel pump or lead wire.

8. **RECONNECT FUEL PUMP & SENDER GAUGE CONNECTOR**
9. **REINSTALL FLOOR SERVICE HOLE COVER**
10. **REINSTALL REAR SEAT CUSHION**

SF0LH-01

REASSEMBLY

Installation is in the reverse order of disassembly (See page SF-12).

SF0LF-01

REMOVAL

CAUTION:

Do not smoke or work near an open flame when working on the fuel pump.

1. REMOVE REAR SEAT CUSHION

2. REMOVE FLOOR SERVICE HOLE COVER

(a) Take out the floor carpet.

(b) Remove the 5 screws and service hole cover.

HINT:

At the time of installation, please refer to the following items. Check for fuel leakage.

3. DISCONNECT FUEL PUMP & SENDER GAUGE CONNECTOR

NOTICE:

Do not lift the fuel pump up with the wire harness picking.

4. REMOVE NO.1 FUEL TANK PROTECTOR

Remove the 2 bolts and No.1 fuel tank protector.

Torque: 4 N·m (40 kgf·cm, 35 in.·lbf)

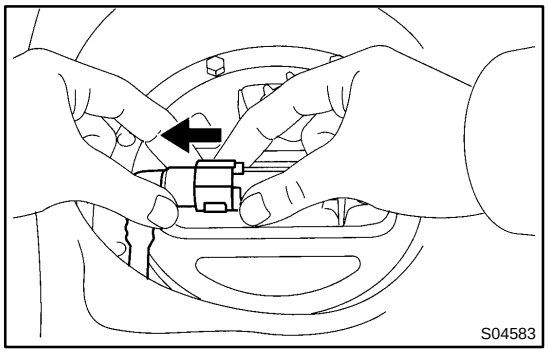

5. DISCONNECT FUEL TUBE (FUEL TUBE CONNECTOR)

CAUTION:

- **Perform disconnecting and connecting operations of the fuel tube connector (quick type) after observing the precautions (See page SF-1).**
- **As there is retained pressure in the fuel pipe line, prevent it from splashing inside the vehicle compartment.**

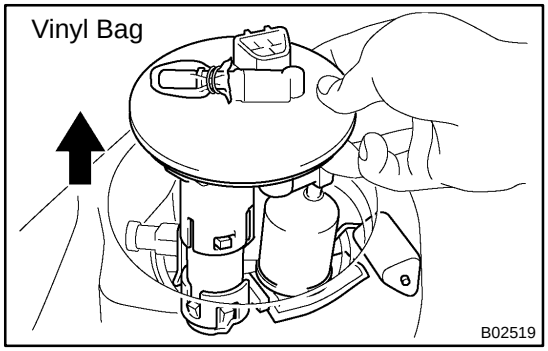

6. REMOVE FUEL PUMP ASSEMBLY FROM FUEL TANK

(a) Remove the 6 bolts and fuel tank vent tube set plate.

Torque: 4 N·m (40 kgf·cm, 35 in.·lbf)

(b) Pull out the fuel pump assembly.

(c) Remove the gasket from the pump assembly.

NOTICE:

- **Do not damage the fuel pump filter.**
- **Be careful that the arm of the sender gauge should not bent.**

HINT:

At the time of installation, please refer to the following items. Install a new gasket to the pump assembly.

HEATED OXYGEN SENSOR

COMPONENTS

SF105-02

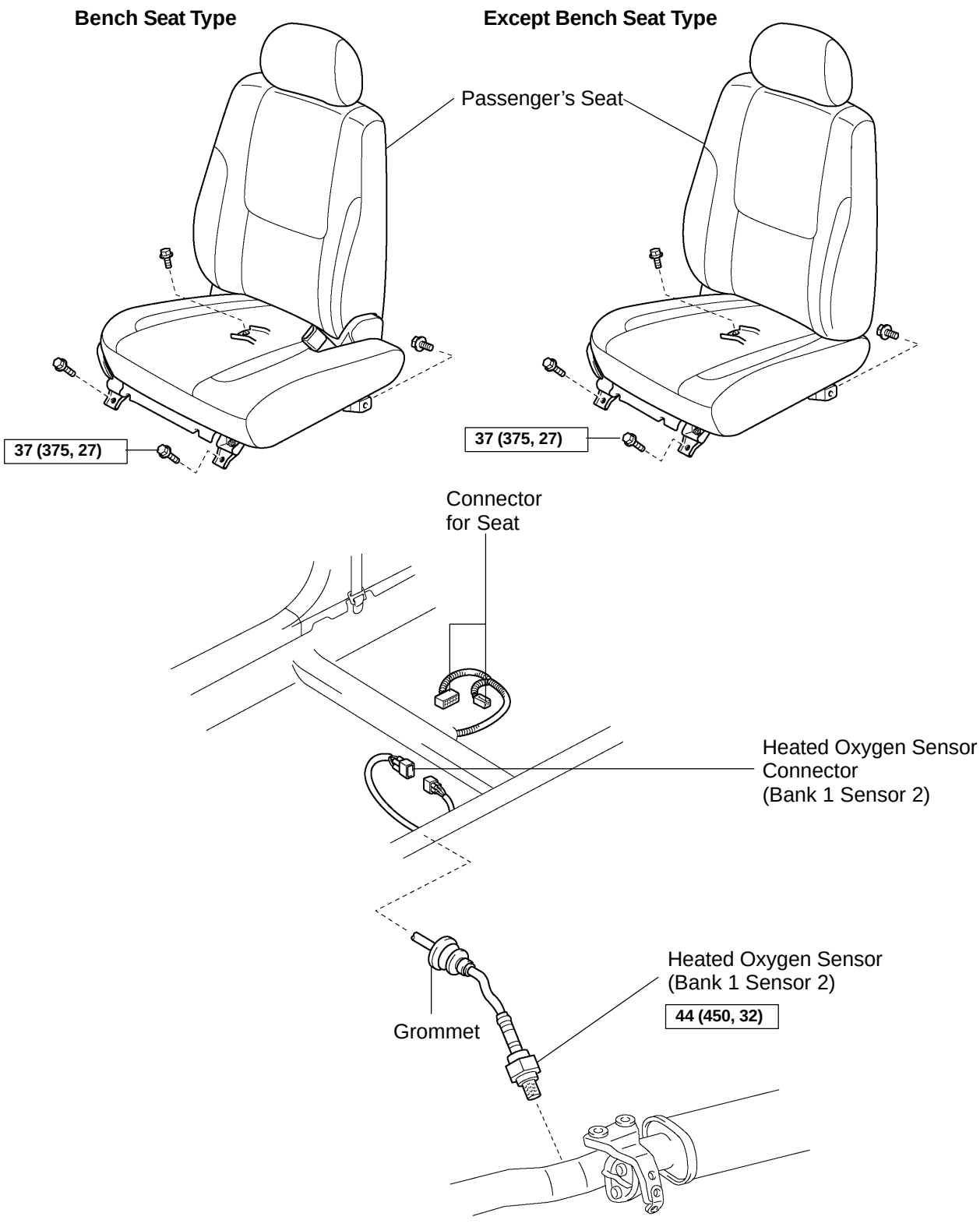

SF106-02

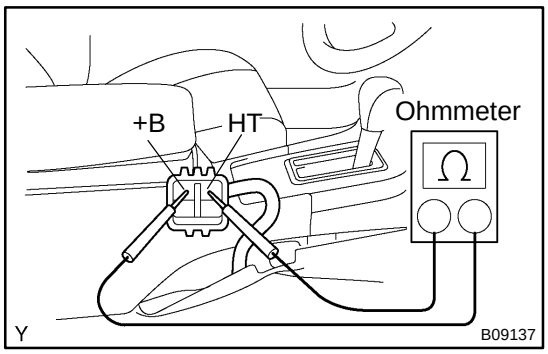

INSPECTION

INSPECT HEATER RESISTANCE OF HEATED OXYGEN SENSOR (Bank 1 Sensor 2)

(a) Remove the passenger's seat.
(b) Disconnect the oxygen sensor connector.
(c) Using an ohmmeter, measure the resistance between the terminals +B and HT.

Resistance:

At 20˚C (68˚F)	11 - 16 Ω
At 800˚C (1,472˚F)	23 - 32 Ω

If the resistance is not as specified, replace the sensor.

Torque: 44 N·m (450 kgf·cm, 32 ft·lbf)

(d) Reconnect the oxygen sensor connector.
(e) Reinstall the passenger's seat.

SF067-05

COMPONENTS

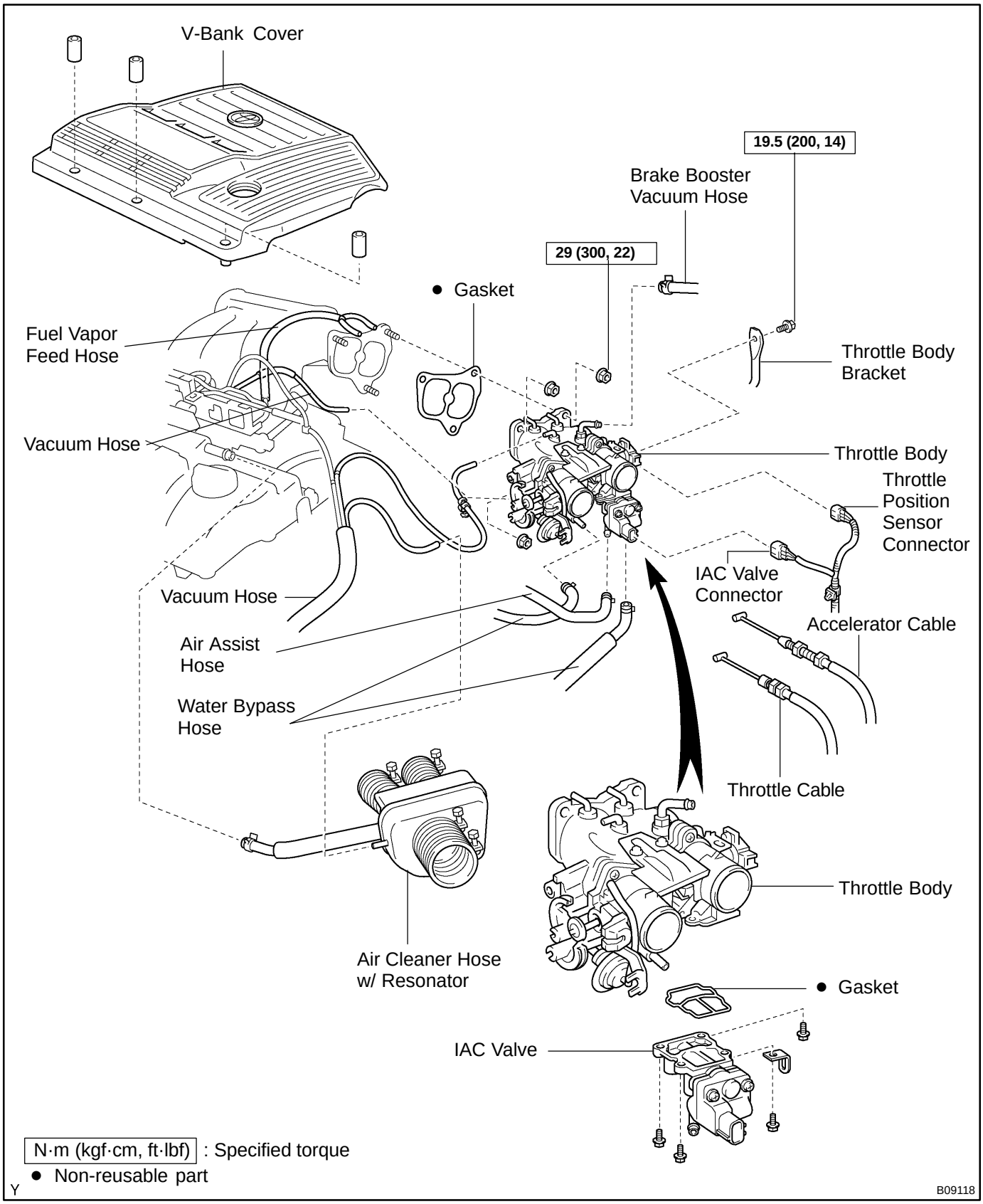

SF0ZX-01

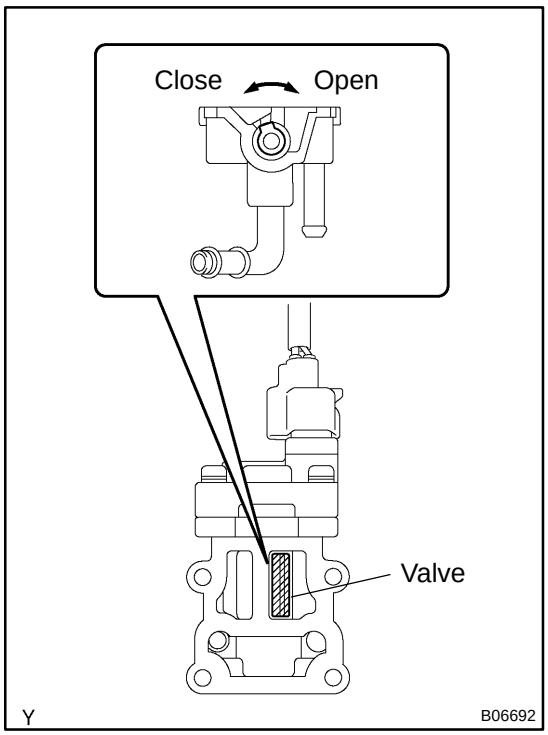

INSPECTION

INSPECT IAC VALVE OPERATION

(a) Check that the IAC valve is halfly opened.
(b) Connect the IAC valve connector to the IAC valve.
(c) Turn the ignition switch ON.
(d) Check that the IAC valve moves in 0.5 seconds by order of fully close, fully open and halfly open.

If operation is not as specified, replace the IAC valve.

(e) Turn the ignition switch OFF.
(f) Disconnect the IAC valve connector from the IAC valve.

SF06A-01

INSTALLATION

Installation is in the reverse order of removal (See page SF-45).

IDLE AIR CONTROL (IAC) VALVE

SF0ZW-01

ON-VEHICLE INSPECTION

1. INSPECT IAC VALVE OPERATION

(a) Initial conditions:
- Engine at normal operating temperature
- Idle speed checked correctly
- Transmission in neutral position
- A/C switch OFF

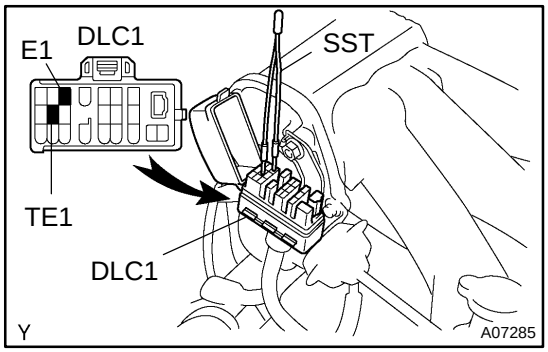

(b) Using SST, connect terminals TE1 and E1 of the DLC1.
SST 09843-18020

(c) After engine speed is kept at approx. 1,000 rpm for 5 seconds, check that it returns to idle speed.

If the engine speed operation is not as specified, check the IAC valve, wiring and ECM.

(d) Remove the SST from the DLC1.
SST 09843-18020

2. INSPECT AIR ASSIST SYSTEM

(a) Initial conditions:
- Engine at normal operating temperature
- Idle speed checked correctly
- Transmission in neutral position
- A/C switch OFF

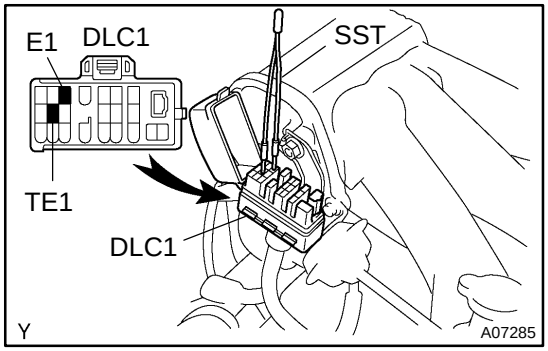

(b) Using SST, connect terminals TE1 and E1 of the DLC1.
SST 09843-18020

(c) After engine speed is kept at 900 - 1,300 rpm for 10 seconds, check that it returns to idle speed.

(d) Stop the engine.

(e) Remove the V-bank cover.

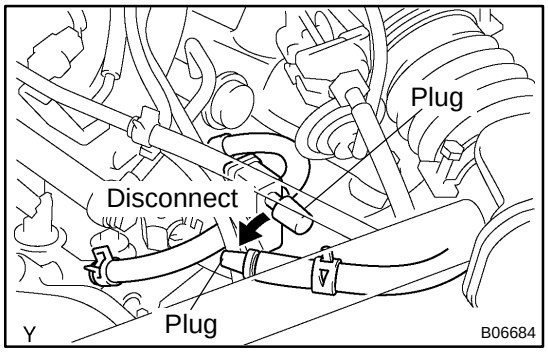

(f) Disconnect the air assist hose from the air pipe, and block off the IAC valve exit and the entry to the pipe.

(g) Start the engine and check that the idle speed reaches 500 rpm or below (the engine may stall).

If the idle does not reach 500 rpm or below, check for a leak between the air assist hoses, pipe and injectors.

(h) Remove the SST from the DLC1.
SST 09843-18020

(i) Reconnect the air assist hose to the air pipe.

(j) Reinstall the V-bank cover.

SF068-03

REMOVAL

1. REMOVE THROTTLE BODY (See page SF-36)

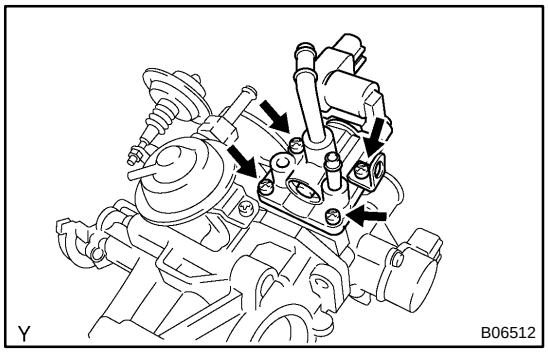

2. REMOVE IAC VALVE

Remove the 4 screws, bracket, IAC valve and gasket.

HINT:

At the time of installation, please refer to the following items.

Place a new gasket on the throttle body.

SF073-04

COMPONENTS

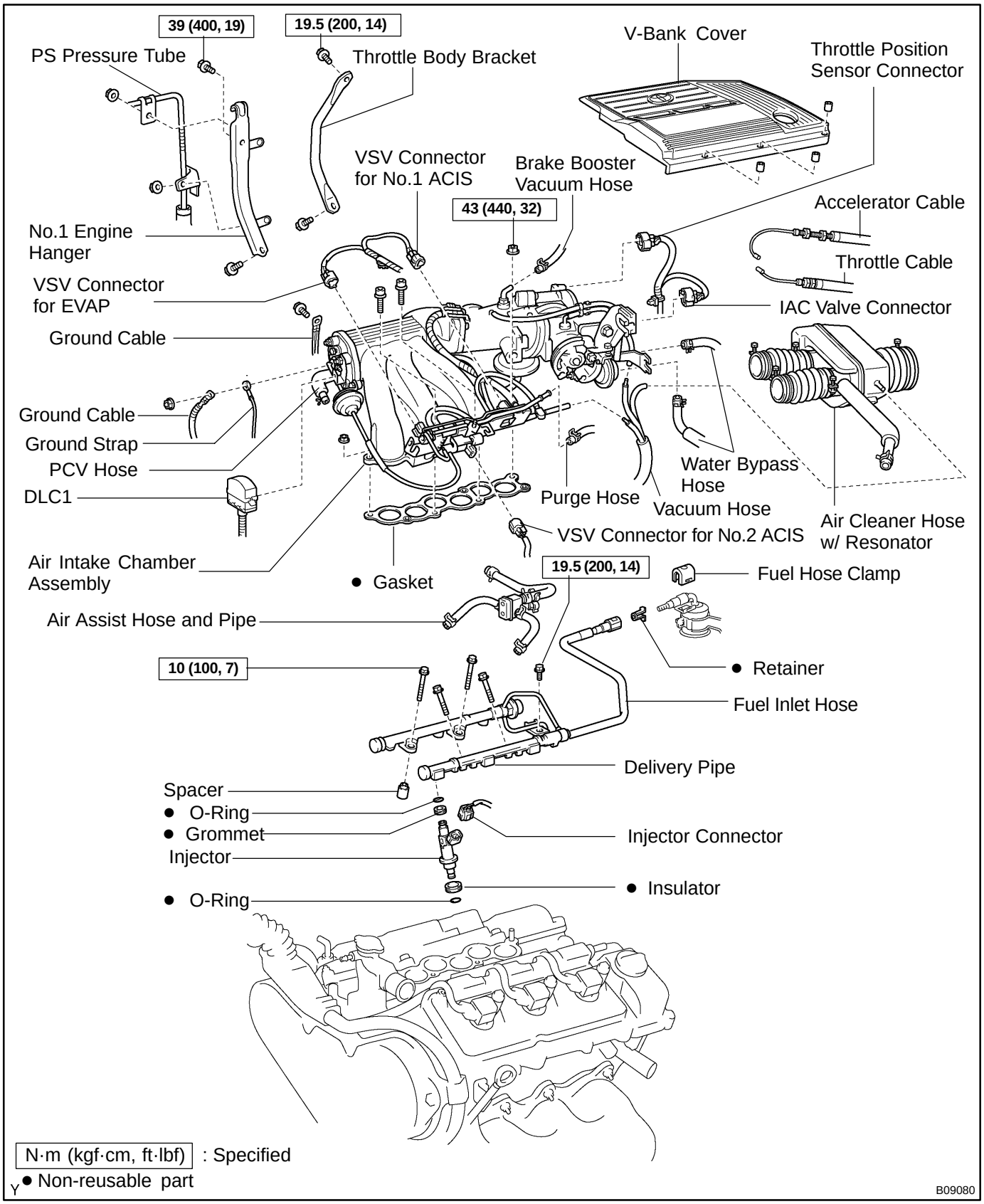

SF075-05

INSPECTION

1. INSPECT INJECTOR INJECTION

CAUTION:

Keep injector clear of sparks during the test.

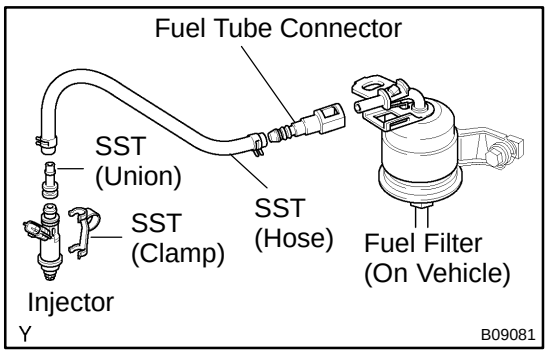

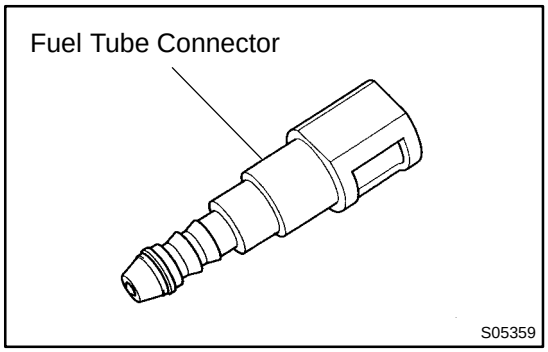

(a) Purchase the new No.1 fuel pipe and take out the fuel tube connector from its pipe.
Part No. 23801-20070

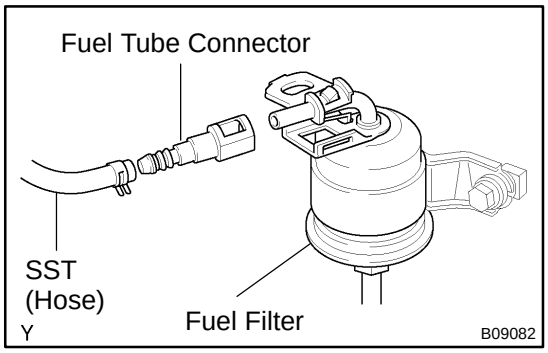

(b) Connect SST (hose) and fuel tube connector to the fuel filter outlet.
SST 09268-41047

CAUTION:

Preform connecting operations of the fuel tube connector (quick type) after observing the precautions (See page SF-1).

HINT:

Use the vehicle fuel filter.

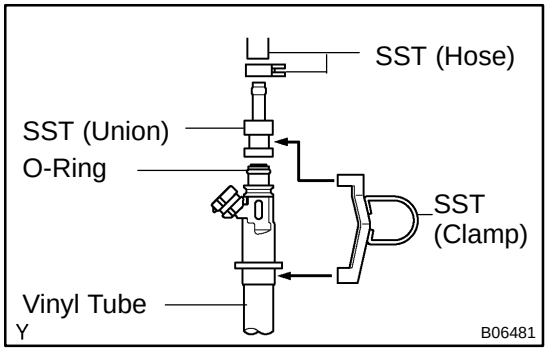

(c) Install the grommet and O-Ring to the injector.

(d) Connect SST (union and hose) to the injector, and hold the injector and union with SST (clamp).
SST 09268-41047

(e) Put the injector into a graduated cylinder.

HINT:

Install a suitable vinyl hose onto the injector to prevent gasoline from splashing out.

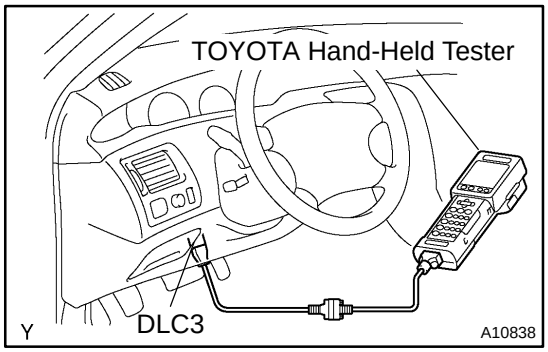

(f) Connect the TOYOTA hand-held tester to the DLC3.

(g) Turn the ignition switch ON and push the TOYOTA hand-held tester main switch ON.

NOTICE:

Do not start the engine.

(h) Select the ACTIVE TEST mode on the TOYOTA hand-held tester.

(i) Please refer to the TOYOTA hand-held tester operator's manual for further details.

(j) If you have no TOYOTA hand-held tester, connect the positive (+) and negative (-) leads from the battery to the fuel pump connector (See page SF-6).

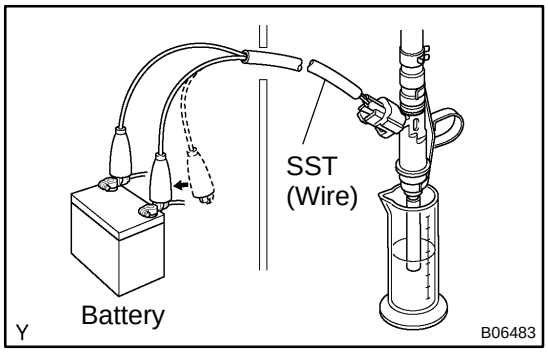

(k) Connect SST (wire) to the injector and battery for 15 seconds, and measure the injection volume with a graduated cylinder. Test each injector 2 or 3 times.
SST 09842-30070
Volume: 60 - 73 cm^3 (3.4 - 4.5 cu in.) per 15 sec.
Difference between each injector:
13 cm^3 (0.8 cu in.) or less

If the injection volume is not as specified, replace the injector.

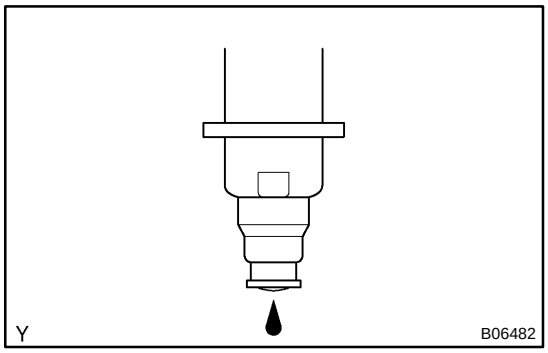

2. INSPECT LEAKAGE

(a) In the condition above, disconnect the test probes of SST (wire) from the battery and check the fuel leakage from the injector.
SST 09842-30070
Fuel drop: 1 drop or less per 12 minutes

(b) Turn the ignition switch OFF.

(c) Disconnect the negative (-) terminal cable from the battery.

(d) Remove the SST and fuel tube connector.
SST 09268-41047, 09842-30070

CAUTION:

- **Perform disconnecting operations of the fuel tube connector (quick type) after observing the precautions (See page SF-1).**
- **As there is retained pressure in the fuel pipe line, prevent it from splashing inside the engine compartment.**

(e) Disconnect the TOYOTA hand- held tester from the DLC3.

SF076-05

INSTALLATION

1. INSTALL INJECTORS AND DELIVERY PIPES

(a) Install new insulator and grommet to each injector.

(b) Apply a light coat of spindle oil or gasoline to 2 new O-rings and install them to each injector.

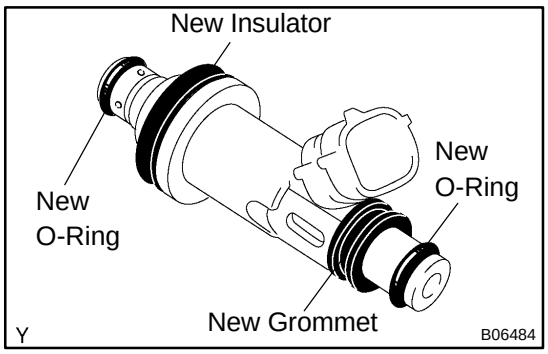

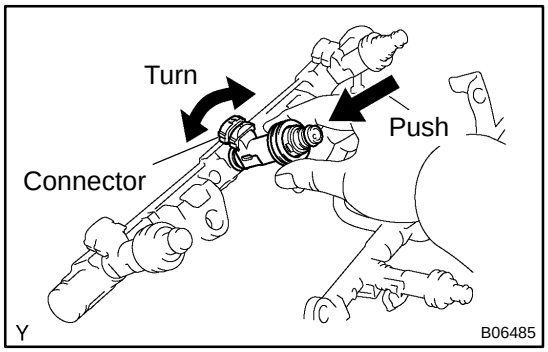

(c) Apply a light coat of spindle oil or gasoline on the place where a delivery pipe touches an O-ring of the injector.

(d) While turning the injector clockwise and counterclockwise, push it to the delivery pipes. Install the 6 injectors.

(e) Position the injector connector outward.

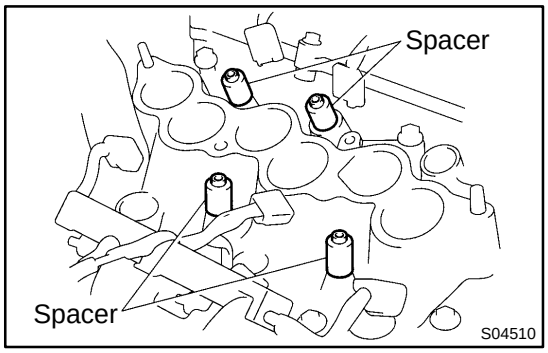

(f) Place the 4 spacers in position on the intake manifold.

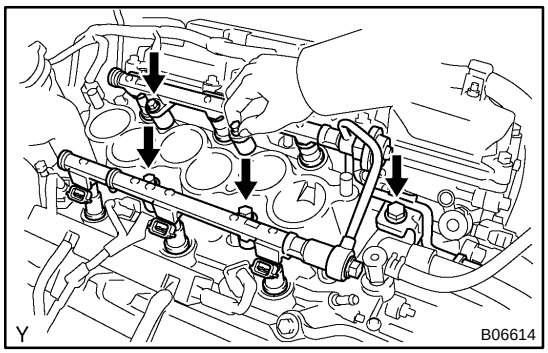

(g) Apply a light coat of spindle oil or gasoline on the place where a intake manifold touches an O-ring of the injector.

(h) Place the delivery pipes and fuel pipe together with the 6 injectors in position on the intake manifold.

(i) Temporarily install the 4 bolts holding the delivery pipes to the intake manifold.

(j) Temporarily install the bolt holding the No.1 fuel pipe to the intake manifold.

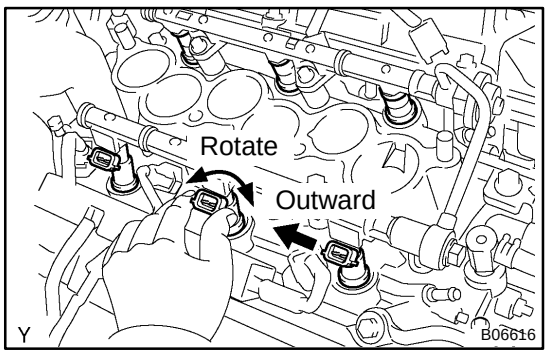

(k) Check that the injectors rotate smoothly.

HINT:

If injectors do not rotate smoothly, the probable cause is incorrect installation of O-rings. Replace the O-rings.

(l) Position the injector connector outward.

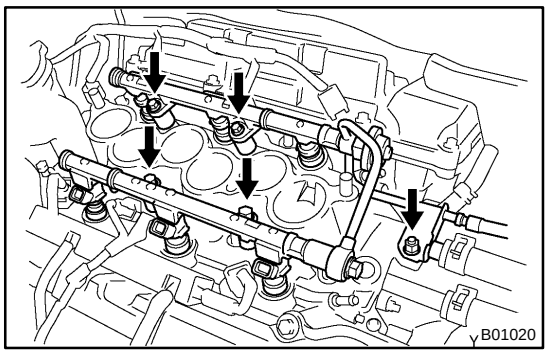

(m) Tighten the 4 bolts holding the delivery pipes to the intake manifold.
Torque: 10 N·m (100 kgf·cm, 7 ft·lbf)
(n) Tighten the bolt holding the No.1 fuel pipe to the intake manifold.
Torque: 19.5 N·m (200 kgf·cm, 14 ft·lbf)

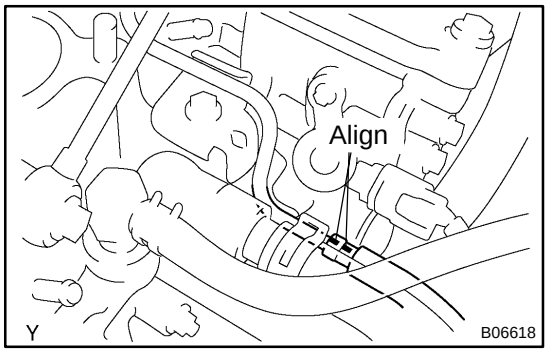

2. CONNECT NO.1 FUEL PIPE
(a) Align the alignment marks (white paint) on the No.1 fuel pipe.

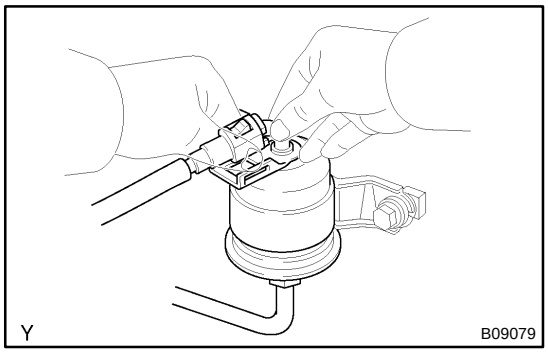

(b) Connect the No.1 fuel pipe (fuel tube connector) to the fuel filter.
CAUTION:
Perform connecting operations of the fuel tube connector (quick type) after observing the precautions.

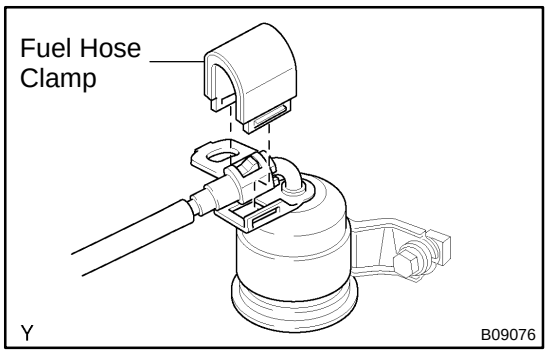

(c) Surely install the fuel hose clamp to the fuel filter with "click" sound.
(d) After installing the clamp, check that the clamp is fixed by pulling up the clamp.

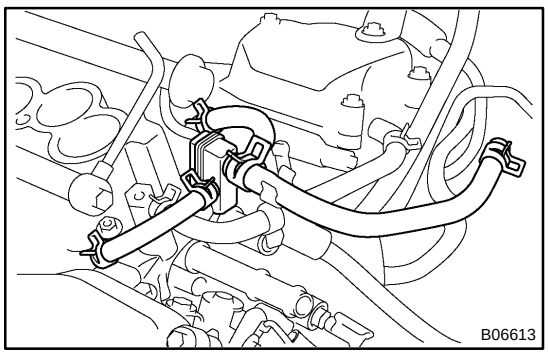

3. INSTALL AIR ASSIST HOSES AND PIPE
4. CONNECT INJECTOR CONNECTORS
5. INSTALL AIR INTAKE CHAMBER ASSEMBLY
(See page EM-59)
6. INSTALL AIR CLEANER HOSE WITH RESONATOR
7. INSTALL V-BANK COVER
(a) Using 5 mm hexagon wrench, install the V-bank cover with the 3 cap nuts.
(b) Press down the V-bank cover fastener.
8. CHECK FOR FUEL LEAKS

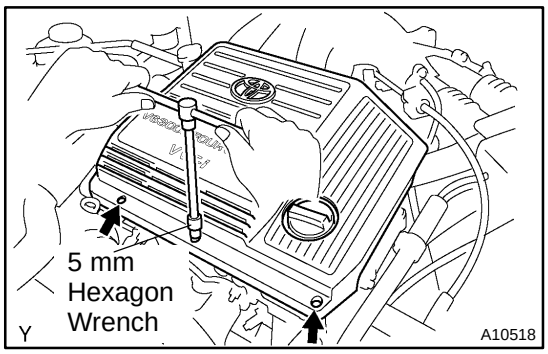

INJECTOR

SF072-05

ON-VEHICLE INSPECTION

1. REMOVE V-BANK COVER

(a) Using a 5 mm hexagon wrench, remove the 3 cap nuts.
(b) Loosen the V-bank cover fastener counterclockwise.
(c) Remove the V-bank cover.

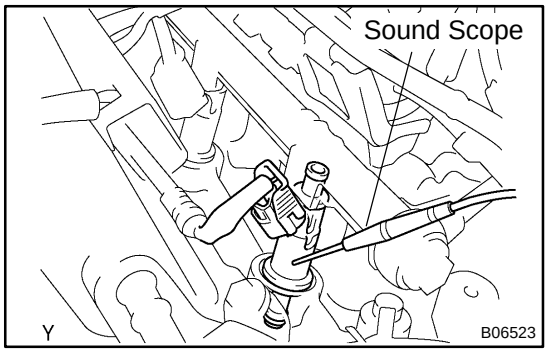

2. INSPECT INJECTOR OPERATION

Check operation sound from each injector.

(1) With the engine running or cranking, use a sound scope to check that there is normal operating noise in proportion to engine speed.
(2) If you have no sound scope, you can check the injector operating vibration with your finger.

If no sound or unusual sound is heard, check the wiring connector, injector or injection signal from the ECM.

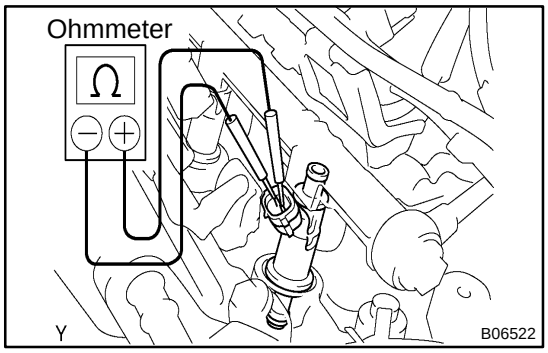

3. INSPECT INJECTOR RESISTANCE

(a) Disconnect the injector connector.
(b) Using an ohmmeter, measure the resistance between the terminals.

Resistance: 13.4 - 14.2 Ω at 20˚C (68˚F)

If the resistance is not as specified, replace the injector.

(c) Reconnect the injector connector.

4. REINSTALL V-BANK COVER

(a) Using 5 mm hexagon wrench, install the V-bank cover with the 3 cap nuts.
(b) Press down the V-bank cover fastener.

SF0ZR-02

REMOVAL

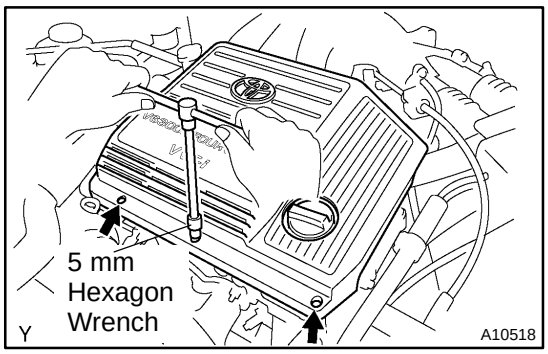

1. REMOVE V-BANK COVER

(a) Using a 5 mm hexagon wrench, remove the 3 cap nuts.

(b) Loosen the V-bank cover fastener counterclockwise.

(c) Remove the V-bank cover.

2. REMOVE AIR CLEANER HOSE WITH RESONATOR

3. REMOVE AIR INTAKE CHAMBER ASSEMBLY (See page EM-31)

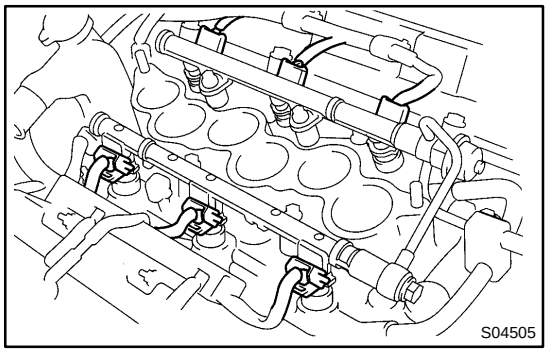

4. DISCONNECT INJECTOR CONNECTORS

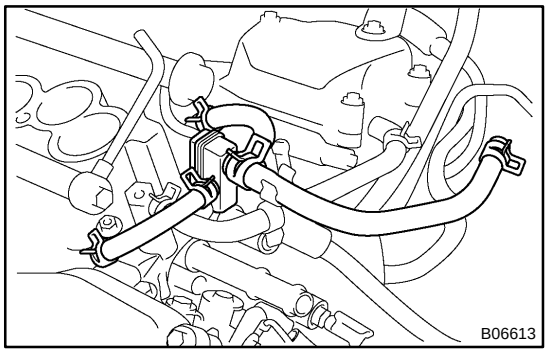

5. REMOVE AIR ASSIST HOSES AND PIPE

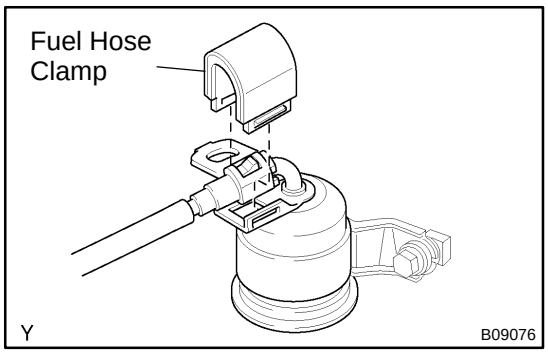

6. DISCONNECT NO.1 FUEL PIPE

(a) Remove the fuel hose clamp.

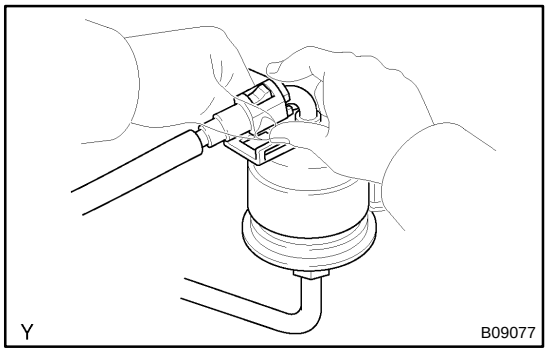

(b) Disconnect the No.1 fuel pipe (fuel tube connector) from the fuel filter outlet.

CAUTION:

- **Perform disconnecting operations of the fuel tube connector (quick type) after observing the precautions (See page SF-1).**
- **As there is retained pressure in the fuel pipe line, prevent it from splashing inside the engine compartment.**

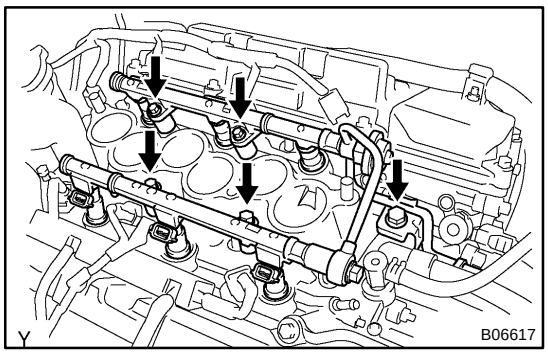

7. REMOVE DELIVERY PIPES AND INJECTORS

NOTICE:

- **Be careful not to drop the injectors when removing the delivery pipes.**
- **Pay attention to put any hung load on the injector to and from the side direction.**

(a) Remove the 5 bolts and delivery pipes together with the 6 injectors and No.1 fuel pipe.

(b) Remove the 4 spacers from the intake manifold.

(c) Pull out the 6 injectors from the delivery pipes.

(d) Remove the 2 O-rings and 2 grommets from each injector.

KNOCK SENSOR

COMPONENTS

SF06S-03

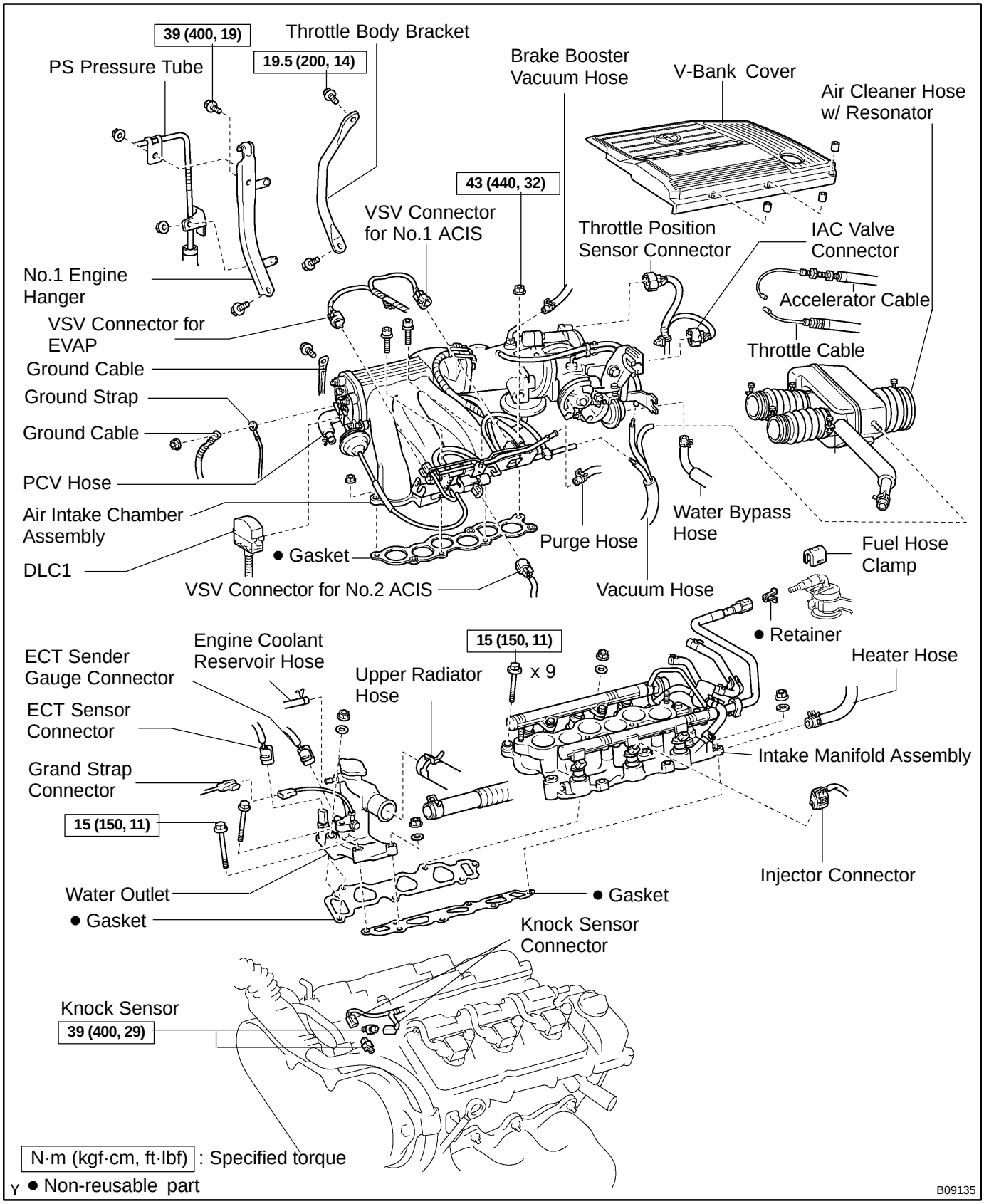

SF102-02

INSPECTION

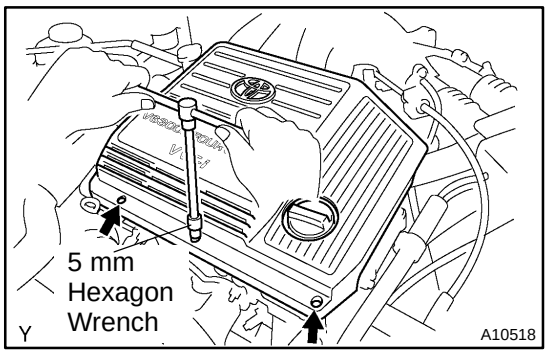

1. REMOVE V-BANK COVER

(a) Using a 5 mm hexagon wrench, remove the 3 cap nuts.

(b) Loosen the V-bank cover fastener counterclockwise.

(c) Remove the V-bank cover.

2. REMOVE AIR CLEANER HOSE WITH RESONATOR

3. REMOVE INTAKE MANIFOLD ASSEMBLY AND WATER OUTLET (See page EM-31)

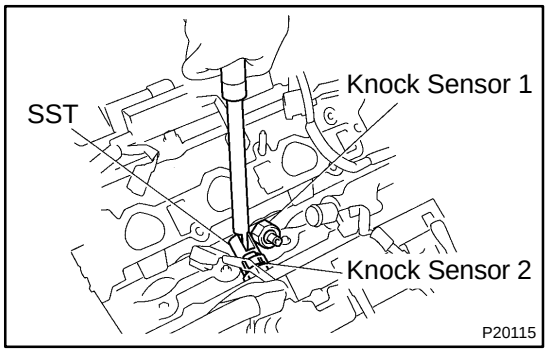

4. REMOVE KNOCK SENSORS

(a) Disconnect the knock sensor connector.

(b) Using SST, remove the knock sensor.

SST 09817-1601 1

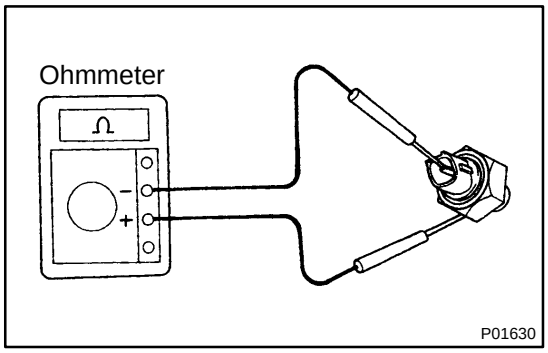

5. INSPECT KNOCK SENSORS

Using an ohmmeter, check that there is no continuity between the terminal and body.

If there is continuity, replace the sensor.

6. REINSTALL KNOCK SENSORS

(a) Using SST, install the knock sensor.

SST 09817-1601 1

Torque: 39 N·m (400 kgf·cm, 29 ft·lbf)

(b) Connect the knock sensor connector.

7. REINSTALL WATER OUTLET AND INTAKE MANIFOLD ASSEMBLY (See page EM-59)

8. REINSTALL AIR CLEANER HOSE WITH RESONATOR

9. REINSTALL V-BANK COVER

(a) Using 5 mm hexagon wrench, install the V-bank cover with the 3 cap nuts.

(b) Press down the V-bank cover fastener.

MASS AIR FLOW (MAF) METER

SF05X-05

COMPONENTS

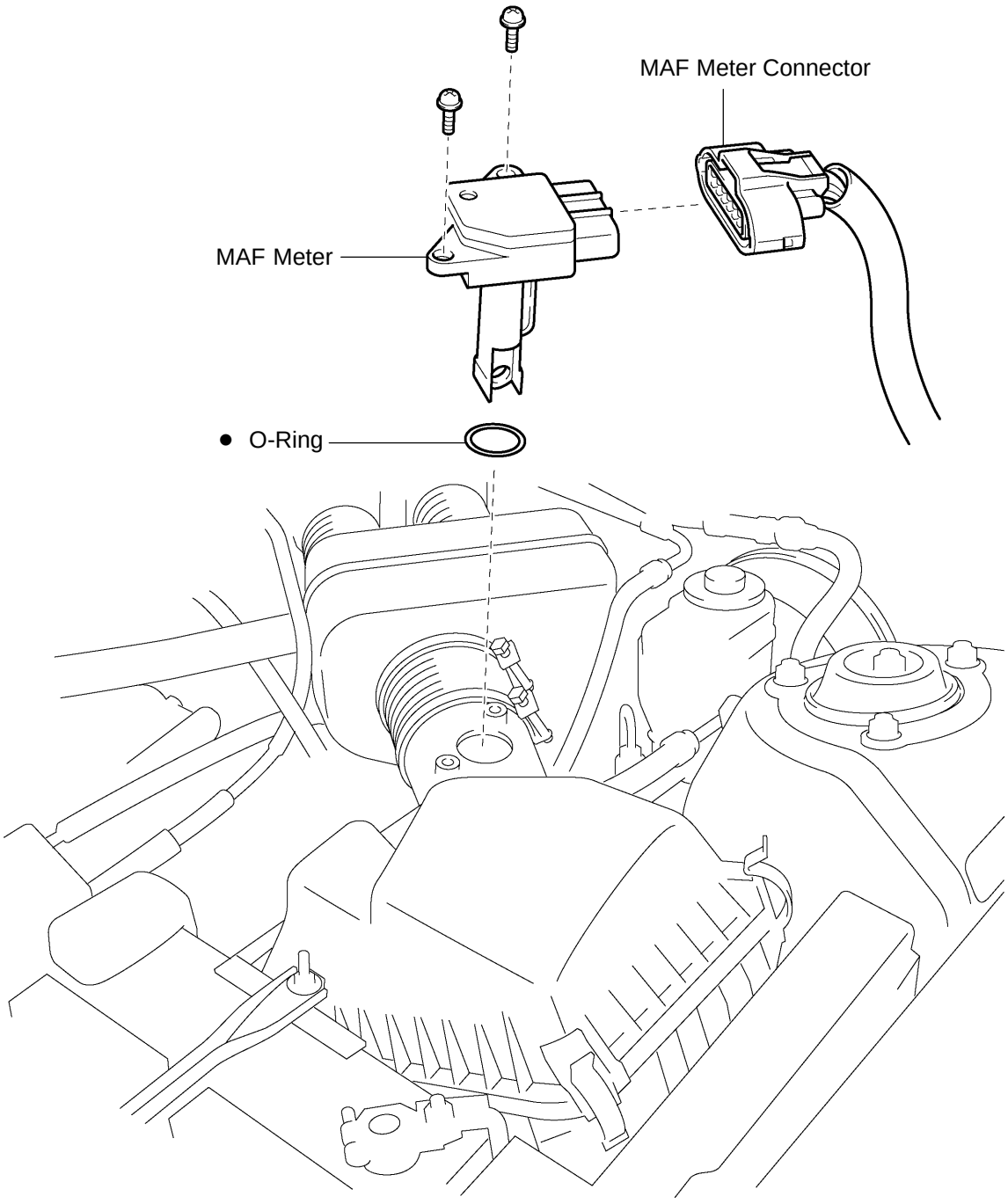

Y ● Non-reusable part

B09084

SF05Z-03

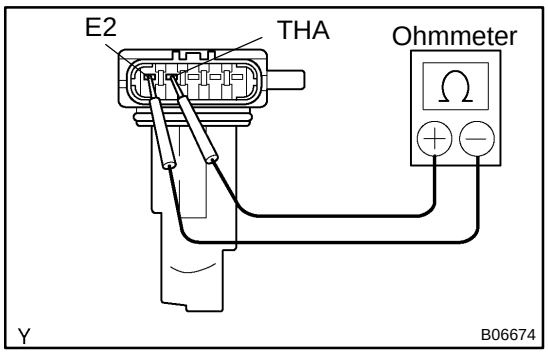

INSPECTION

1. INSPECT MAF METER RESISTANCE

Using an ohmmeter, measure the resistance between terminals THA and E2.

Resistance:

Terminals	Resistance	Temperature
THA - E2	13.6 - 18.4 kΩ	-20 ˚C (-4 ˚F)
THA - E2	2.21 - 2.69 kΩ	20 ˚C (68 ˚F)
THA - E2	0.49 - 0.67 kΩ	60 ˚C (140 ˚F)

If the resistance is not as specified, replace the MAF meter.

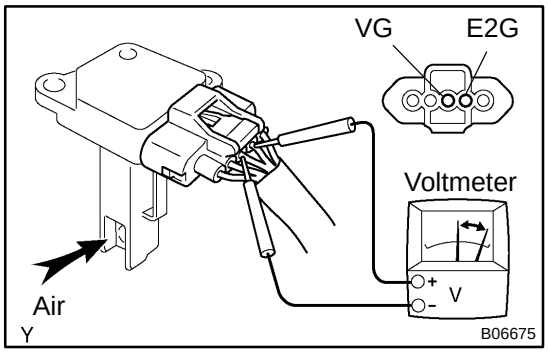

2. INSPECT MAF METER OPERATION

(a) Connect the MAF meter connector.
(b) Turn the ignition switch ON.
(c) Using a voltmeter, connect the positive (+) tester probe to terminal VG, and negative (-) tester probe to terminal E2G.
(d) Blow air into the MAF meter, and check that the voltage fluctuates.

If operation is not as specified, replace the MAF meter.

(e) Turn the ignition switch LOCK.
(f) Disconnect the MAF meter connector.

SF060-01

INSTALLATION

Installation is in the reverse order of removal (See page SF-30).

SF05Y-05

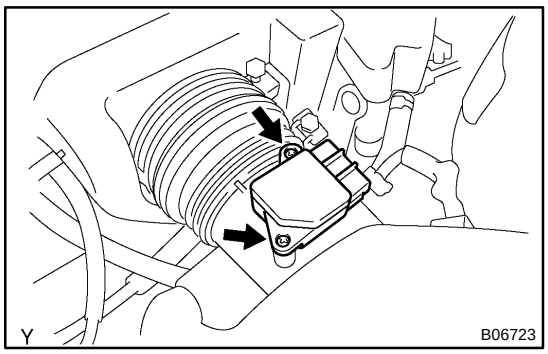

REMOVAL

REMOVE MAF METER

(a) Disconnect the MAF meter connector.

(b) Remove the 2 screws, MAF meter and O-ring.

HINT:

At the time of installation use a new O-ring.

SFI SYSTEM

SF0LC-03

PRECAUTION

1. BEFORE WORKING ON FUEL SYSTEM, DISCONNECT NEGATIVE (-) TERMINAL CABLE FROM BATTERY

HINT:

Any diagnostic trouble code retained by the computer will be erased when the negative (-) terminal cable is removed from the battery.

Therefore, if necessary, read the diagnosis before removing the negative (-) terminal cable from the battery.

2. DO NOT SMOKE OR WORK NEAR AN OPEN FLAME WHEN WORKING ON FUEL SYSTEM

3. KEEP GASOLINE AWAY FROM RUBBER OR LEATHER PARTS

4. MAINTENANCE PRECAUTIONS

(a) In event of engine misfire, these precautions should be taken.
  (1) Check proper connection to battery terminals, etc.
  (2) After repair work, check that the ignition coil terminals and all other ignition system lines are reconnected securely.
  (3) When cleaning the engine compartment, be especially careful to protect the electrical system from water.

(b) Precautions when handling the oxygen sensor.
  (1) Do not allow oxygen sensor to drop or hit against an object.
  (2) Do not allow the sensor to come into contact with water.

5. IF VEHICLE IS EQUIPPED WITH A MOBILE RADIO SYSTEM (HAM, CB, ETC.)

If the vehicle is equipped with a mobile communication system, refer to the precaution in the IN section.

6. AIR INDUCTION SYSTEM

(a) Separation of the engine oil dipstick, oil filler cap, PCV hose, etc. may cause the engine to run out of tune.

(b) Disconnection, looseness or cracks in the parts of the air induction system between the throttle body and cylinder head will allow air suction and cause the engine to run out of tune.

7. ELECTRONIC CONTROL SYSTEM

(a) Before removing SFI wiring connectors, terminals, etc., first disconnect the power by either turning the ignition switch to LOCK or disconnecting the negative (-) terminal cable from the battery.

HINT:

Always check the diagnostic trouble code before disconnecting the negative (-) terminal cable from the battery.

(b) When installing the battery, be especially careful not to incorrectly connect the positive (+) and negative (-) cables.
(c) Do not permit parts to receive a severe impact during removal or installation. Handle all SFI parts carefully, especially the ECM.
(d) Do not be careless during troubleshooting as there are numerous transistor circuits and even slight terminal contact can cause further troubles.
(e) Do not open the ECM cover.
(f) When inspecting during rainy weather, take care to prevent entry of water. Also, when washing the engine compartment, prevent water from getting on the SFI parts and wiring connectors.
(g) Parts should be replaced as an assembly.
(h) Care is required when pulling out and inserting wiring connectors.
    (1) Release the lock and pull out the connector, pulling on the connectors.
    (2) Fully insert the connector and check that it is locked.

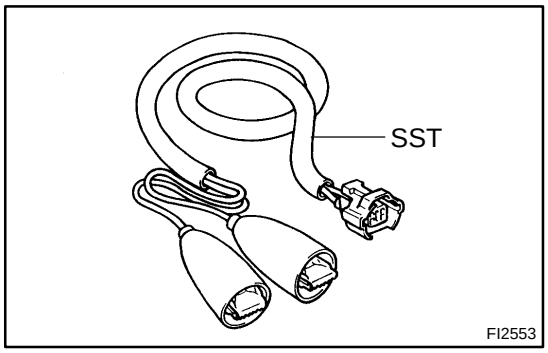

(i) Use SST for inspection or test of the injector or its wiring connector.
SST 09842-30070

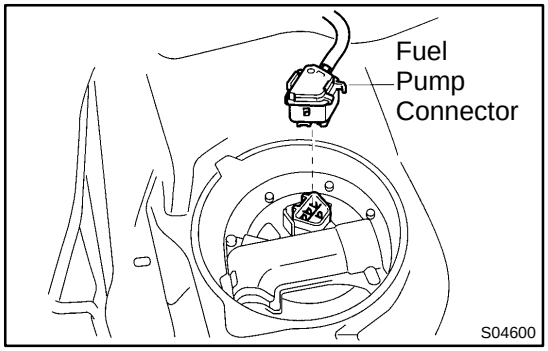

8. FUEL SYSTEM

(a) When disconnecting the high fuel pressure line, a large amount of gasoline will spill out, so observe the following procedures:
    (1) Disconnect the fuel pump connector.
    (2) Start the engine. After the engine has stopped on its own, turn the ignition switch to LOCK.

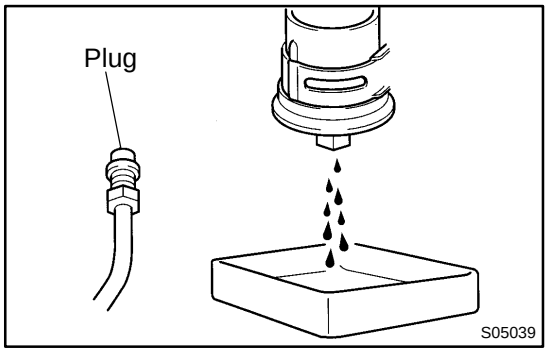

    (3) Put a container under the connection.
    (4) Slowly loosen the connection.
    (5) Disconnect the connection.
    (6) Plug the connection with a rubber plug.

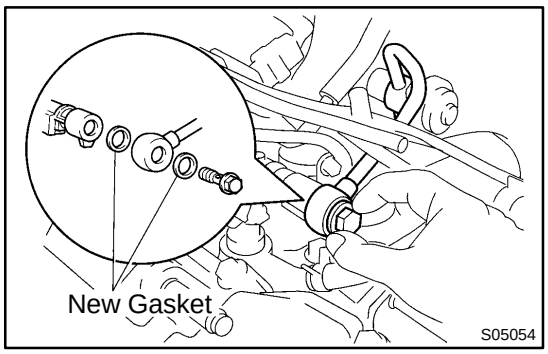

(b) When connecting the union bolt on the high pressure pipe union, observe the following procedures:
(1) Always use 2 new gaskets.
(2) Tighten the union bolt by hand.
(3) Tighten the union bolt to the specified torque.
Torque: 29 N·m (300 kgf·cm, 21 ft·lbf)

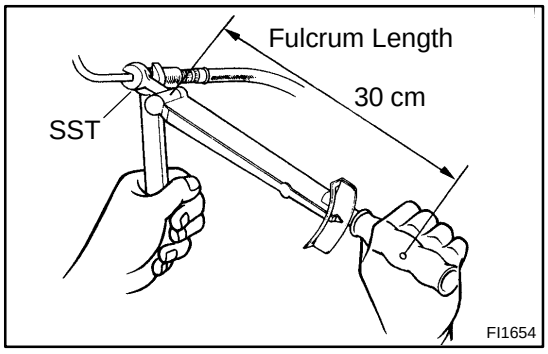

(c) When connecting the flare nut on the high pressure pipe union, observe the following procedures:
(1) Apply a light coat of engine oil to the flare nut, and tighten the flare nut by hand.
(2) Using SST, tighten the flare nut to specified torque.
SST 09023-12700

NOTICE:
Do not rotate the fuel pipe, when tightening the flare nut.
Torque: 28 N·m (285 kgf·cm, 21 ft·lbf)

HINT:
Use a torque wrench with a fulcrum length of 30 cm (11.81 in.).

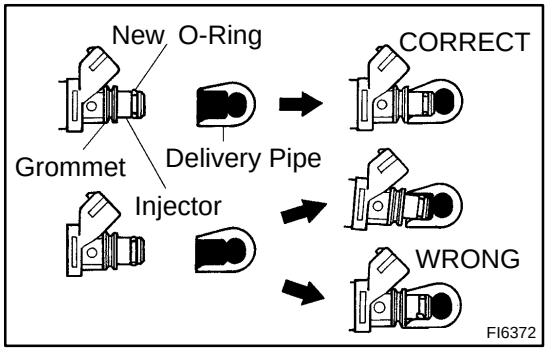

(d) Observe the following precautions when removing and installing the injectors.
(1) Never reuse the O-ring.
(2) When placing a new O-ring on the injector, take care not to damage it in any way.
(3) Coat a new O-ring with spindle oil or gasoline before installing-never use engine, gear or brake oil.

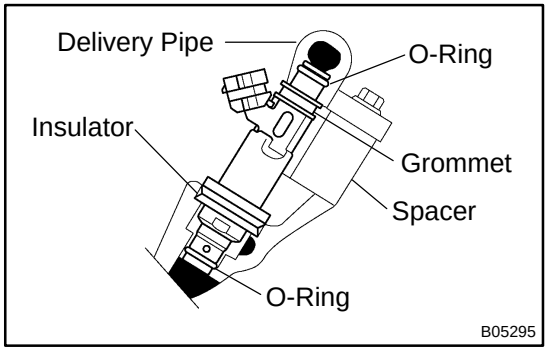

(e) Install the injector to the delivery pipe and intake manifold as shown in the illustration.
(f) Observe these precautions when disconnecting the fuel tube connector (quick type).
(1) Check if there is any dirt like mud on the pipe and around the connector before disconnecting them and clean the dirt away.
(2) Be sure to disconnect with hands.

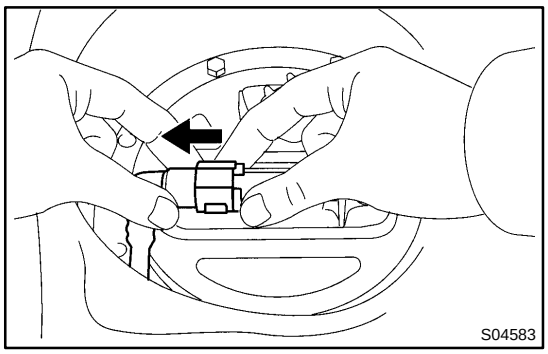

(3) When the connector and the pipe are stuck, pinch the retainer between the hands, push and pull the connector to free to disconnect and pull it out. Do not use any tool at this time.

(4) Inspect if there is any dirt or the likes on the seal surface of the disconnected pipe and clean it away.

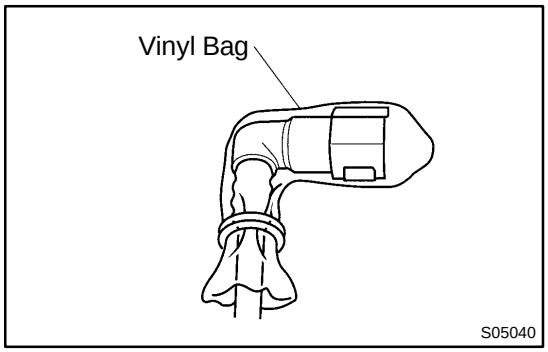

(5) Prevent the disconnected pipe and connector from damaging and mixing foreign objects by covering them with a vinyl bag.

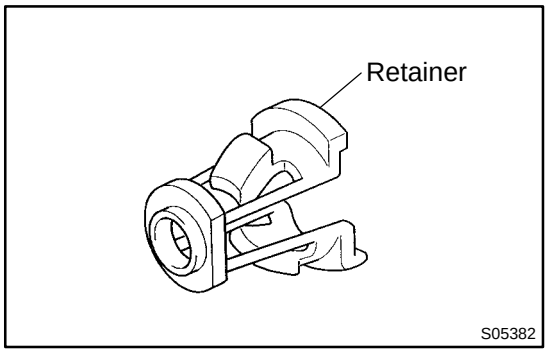

(g) Observe these precautions when connecting the fuel tube connector (quick type).

(1) Do not reuse the retainer removed from the pipe.

(2) Must use hands without using tools when to remove the retainer from the pipe.

(3) Check if there is any damage or foreign objects on the connected part of the pipe.

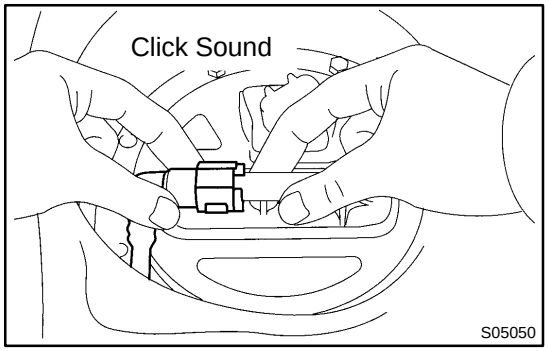

(4) Match the axis of the connector with axis of the pipe, and push in the connector until the retainer makes a ”click” sound. In case that the connections is tight, apply little amount of new engine oil on the tip of the pipe.

(5) After having finished the connection, check if the pipe and the connector are securely connected by pulling them.

(6) Check if there is any fuel leakage.

(h) Observe these precautions when handling nylon tube.

(1) Pay attention not to turn the connector with force when connecting them.

(2) Pay attention not to kink the nylon tube.

(3) Do not remove the EPDM protector on the outside of the nylon tube.

(4) Must not close the piping with the nylon tube by bending it.

Before installing the injector, must apply spindle oil or gasoline on the place where a delivery pipe or an intake manifold touches an O-ring of the injector.

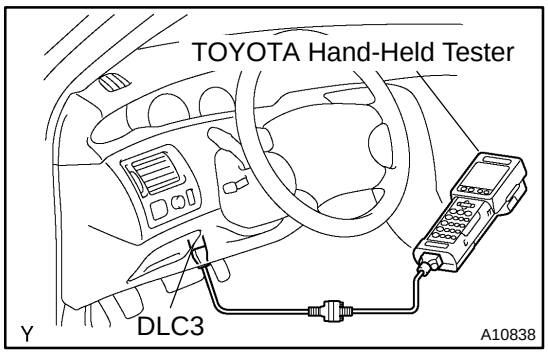

(i) Check that there are no fuel leaks after performing maintenance anywhere on the fuel system.
(1) Connect a TOYOTA hand-held tester to the DLC3.
(2) Turn the ignition switch ON and TOYOTA hand-held tester main switch ON.

NOTICE:
Do not start the engine.

(3) Select the active test mode on the TOYOTA hand-held tester.
(4) Please refer to the TOYOTA hand-held tester operator's manual for further details.
(5) If you have no TOYOTA hand-held tester, connect the positive (+) and negative (-) leads from the battery to the fuel pump connector (See page SF-6).
(6) Check that there are no leaks from any part of the fuel system.
(7) Turn the ignition switch to LOCK.
(8) Disconnect the TOYOTA hand-held tester from the DLC3.

SF0ZS-03

COMPONENTS

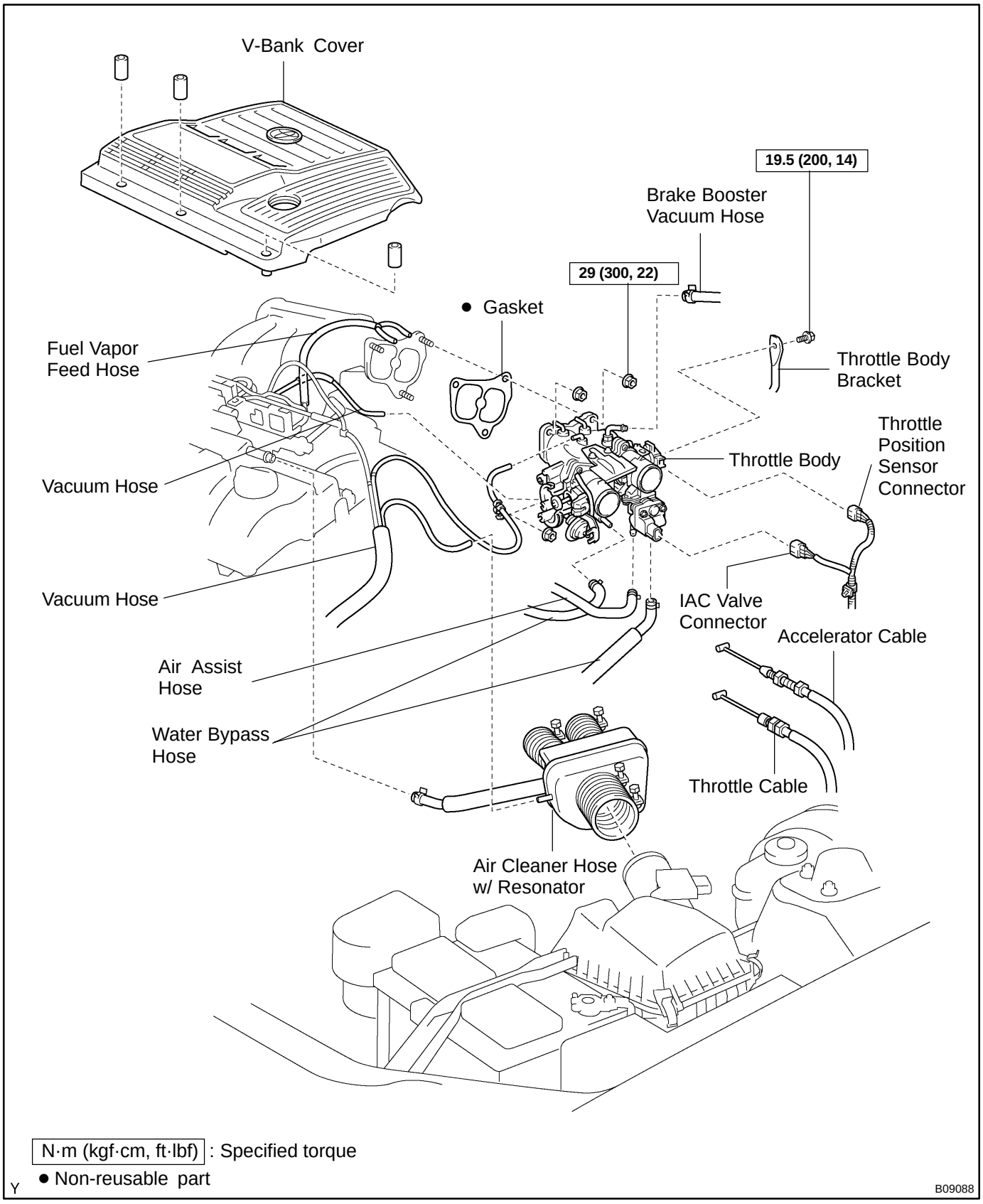

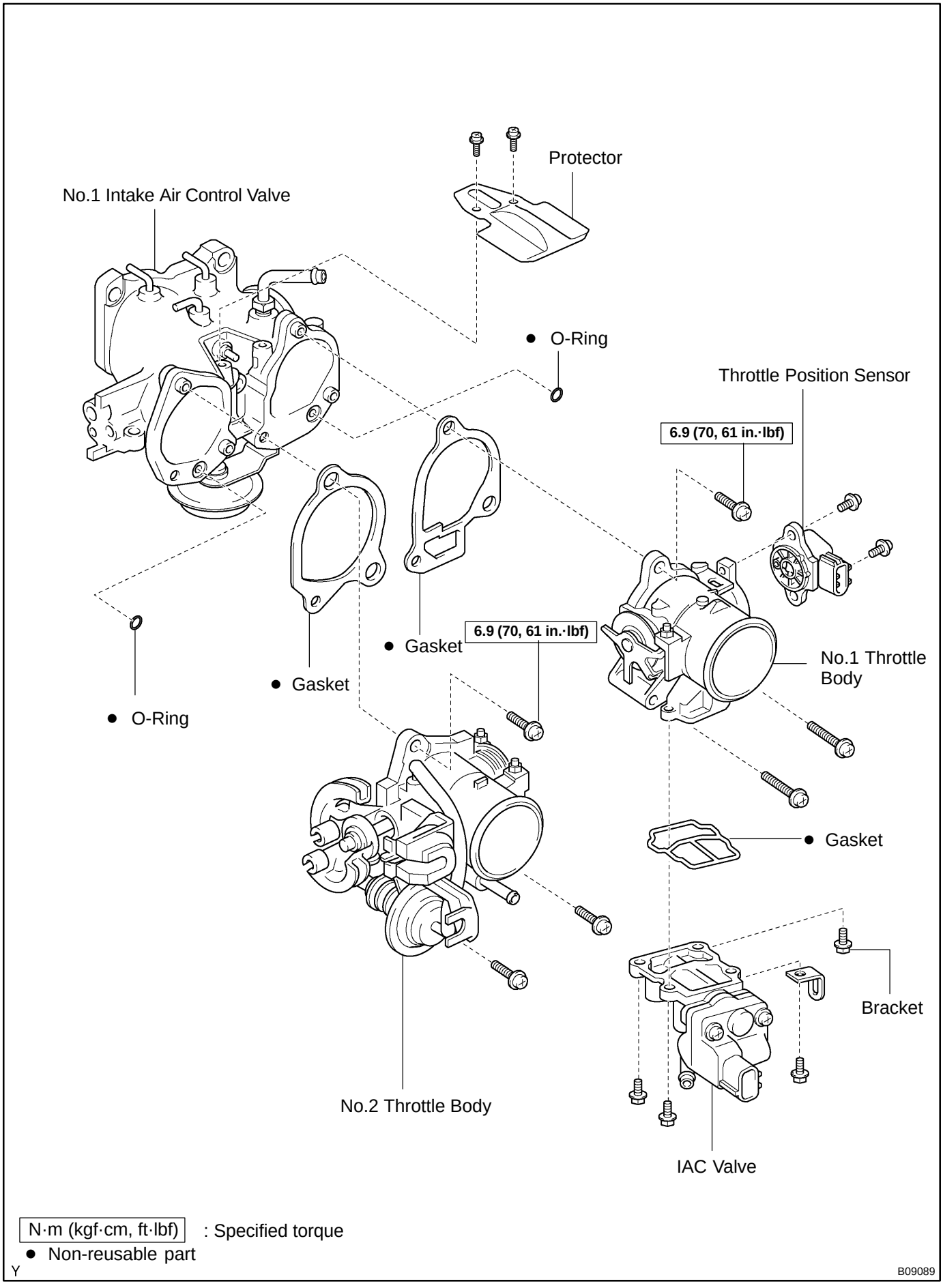
Protector
No.1 Intake Air Control Valve
● O-Ring
Throttle Position Sensor
6.9 (70, 61 in.·lbf)
● Gasket
6.9 (70, 61 in.·lbf)
No.1 Throttle Body
● Gasket
● O-Ring
● Gasket
Bracket
No.2 Throttle Body
IAC Valve
N·m (kgf·cm, ft·lbf) : Specified torque
● Non-reusable part
Y
B09089

SF0ZU-02

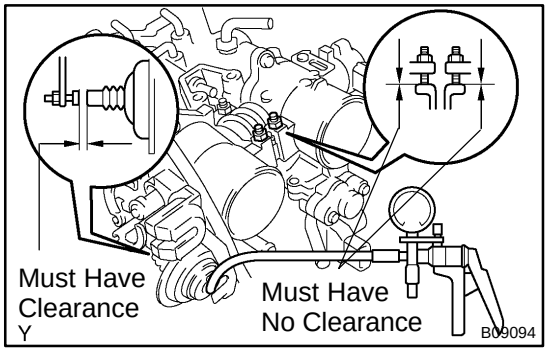

INSPECTION

NOTICE:

In case of changing, removing or installing the throttle body or IAC valve, must do this.

1. INSPECT THROTTLE BODY

(a) Check that there is no clearance between each throttle stop screw and the throttle lever when applying the vacuum (53.3 kPa (400 mmHg, 15.7 in.Hg)) to the throttle opener using a MITYVAC (Hand-Held Vacuum Pump).

Standard: Must have no clearance

NOTICE:

As the throttle stop screw is precisely adjusted, so do not adjust it.

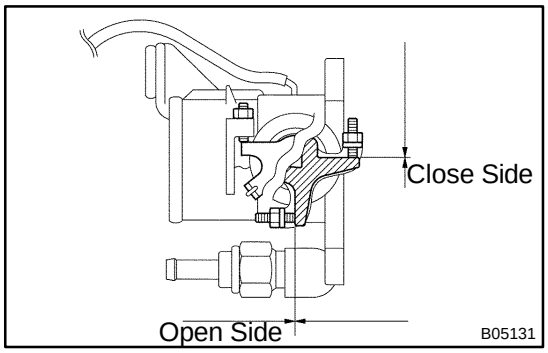

(b) Under the condition of (1), check visually that there is a clearance between each adjust screw and the throttle lever on No.1 side.

Adjust screw	Reference value
Close side	About 0.13 mm (0.0051 in.)
Open side	About 0.22 mm (0.0087 in.)

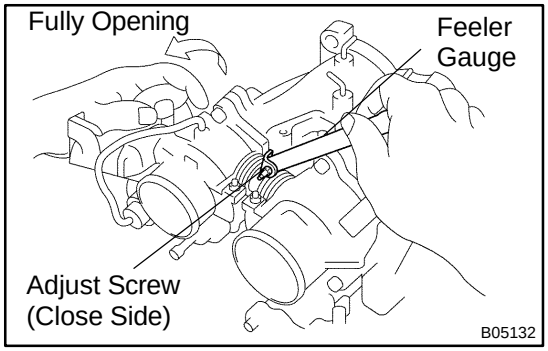

(c) Measure the clearance between the adjust screw on the close side when fully opening the throttle lever on No.2 side by hand and the throttle lever on No.1 side with a feeler gauge.

Standard value: 0.25 - 0.45 mm (0.0098 - 0.0177 in.)

In case of being out of standard value, perform the adjustment of step 2.

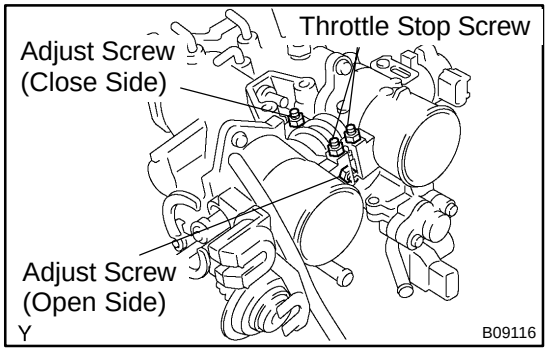

2. ADJUST THROTTLE BODY (BALANCE)

NOTICE:

Do not adjust the throttle stop screw and throttle opener.

(a) Beforehand checking.
Recheck 1 - (a).

(b) Adjustment of the adjust screw on the open side.
(1) Using a 2 mm hexagon wrench, loosen the lock nut and screw, make clearance between the screw tip and the throttle lever on No.1 side.
(2) Turn the screw to the screw torque direction gradually, and stop it at the position where to touch the lever at the very moment.

NOTICE:

If turning it too much to the torque direction, the No.1 lever goes off from the throttle stop screw causing the adjustment failure.

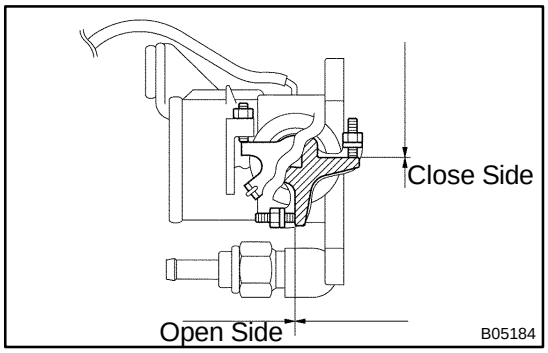

(3) Turn it back from the position where it touches the lever to the screw loosing direction.
Standard: Turn it back by rotating 1/4
(4) Tighten the lock nut.

(c) Adjustment of the adjust screw on the close side.
(1) Loosen the lock nut and screw, and make clearance between the screw tip and the throttle lever on No.1 side.
(2) Turn the screw to the screw torque direction gradually, and stop it at the position where to touch the lever at the very moment.

NOTICE:

If turning it too much to the torque direction, the No.2 lever goes off from the throttle stop screw causing the adjustment failure.

(3) Turn it back from the position where it touches the lever to the screw loosing direction.
Standard: Turn it back by rotating 1/2 - 3/4
(4) Tighten the lock nut.

(d) Completion checking.
Check 1 - (c).

SF065-03

INSTALLATION

Installation is in the reverse order of removal (See page SF-36).

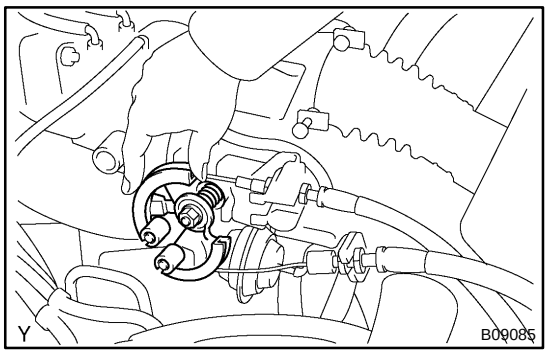

THROTTLE BODY

SF061-03

ON-VEHICLE INSPECTION

1. INSPECT THROTTLE BODY

Check that the throttle linkage moves smoothly.

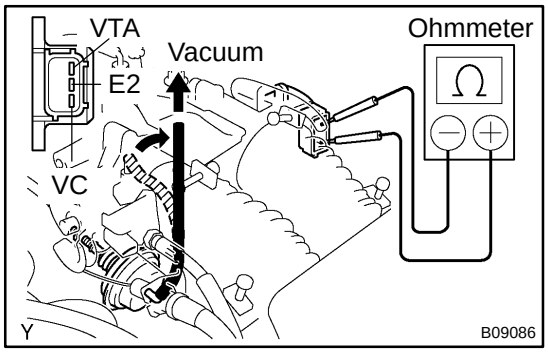

2. INSPECT THROTTLE POSITION SENSOR

(a) Disconnect the sensor connector.

(b) Disconnect the vacuum hose from the throttle body.

(c) Apply vacuum to the throttle opener.

(d) Using an ohmmeter, measure the resistance between each terminal.

Resistance:

Throttle valve condition	Between terminals	Resistance
Fully closed	VTA - E2	0.2 - 6.3 kΩ
Fully open	VTA - E2	2.0 - 10.2 kΩ
-	VC - E2	2.5 - 5.9 kΩ

(e) Reconnect the vacuum hose to the throttle body.

3. INSPECT THROTTLE OPENER

(a) Allow the engine to warm up to normal operating temperature.

(b) Check idle speed.

Idle speed: 650 ± 50 rpm

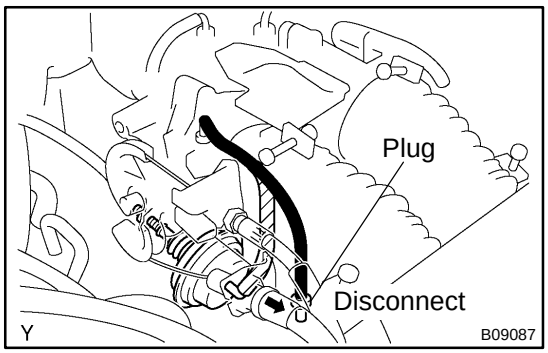

(c) Disconnect the vacuum hose from the throttle opener, and plug the hose end.

(d) Check the throttle opener setting speed.

Throttle opener setting speed: 1,100 - 1,700 rpm

If the throttle opener setting is not as specified, replace the throttle body.

(e) Stop the engine.

(f) Reconnect the vacuum hose to the throttle opener.

(g) Start the engine and check that the idle speed returns to the correct speed.

REMOVAL

1. DRAIN ENGINE COOLANT

SF0ZT-02

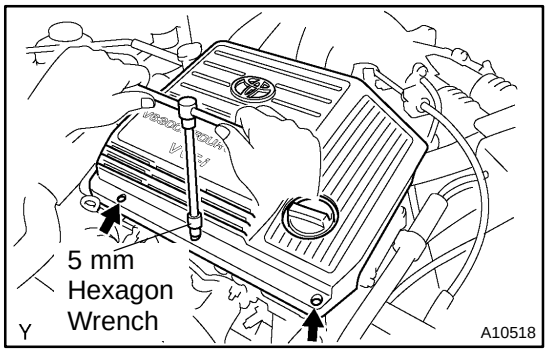

2. REMOVE V-BANK COVER

(a) Using a 5 mm hexagon wrench, remove the 3 cap nuts.

(b) Loosen the V-bank cover fastener counterclockwise.

HINT:

At the time of installation, please refer to the following items.

Press down the V-bank cover fastener.

(c) Remove the V-bank cover.

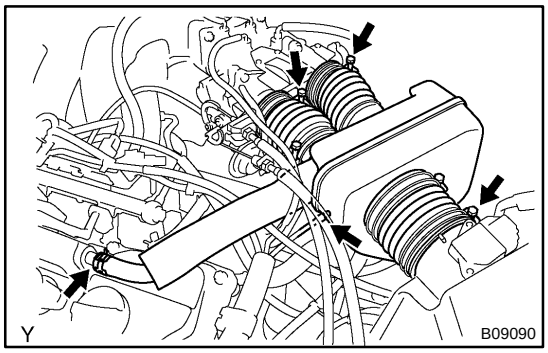

3. REMOVE AIR CLEANER HOSE WITH RESONATOR

(a) Disconnect the PCV hose.

(b) Disconnect the vacuum hose (from the VSV for the active engine control mount).

(c) Loosen the 3 hose clamps, and remove the air cleaner hose with the resonator.

4. DISCONNECT ACCELERATOR CABLE AND THROTTLE CABLE

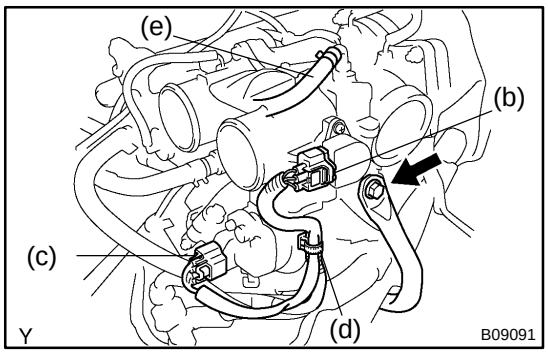

5. REMOVE THROTTLE BODY

(a) Remove the bolt holding the throttle body to the throttle body bracket.

Torque: 19.5 N·m (200 kgf·cm, 14 ft·lbf)

(b) Disconnect the throttle position sensor connector.

(c) Disconnect the IAC valve connector.

(d) Disconnect the wire clamp.

(e) Disconnect the brake booster vacuum hose.

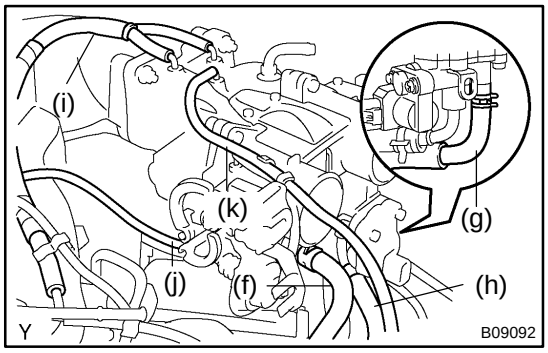

(f) Disconnect the water bypass hose (from the intake manifold).

(g) Disconnect the water bypass hose (from the water inlet housing).

(h) Disconnect the air assist hose.

(i) Disconnect the fuel vapor feed hose (from the emission control valve set).

(j) Disconnect the vacuum hose (from the No.1 ACIS VSV).

(k) Disconnect the vacuum hose (from the vacuum tank for the ACIS).

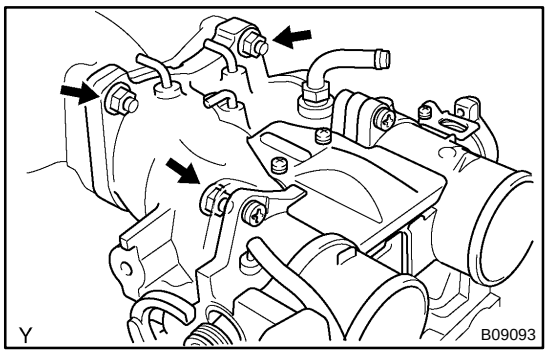

(l) Remove the 3 nuts, throttle body and gasket.

HINT:

At the time of installation, please refer to the following items.

Place a new gasket on the air intake chamber.

Torque: 29 N·m (300 kgf·cm, 22 ft·lbf)

SF16B-01

REPLACEMENT

NOTICE:

- **Do not give a shock to the throttle position senor.**
- **Do not disassemble or adjust the throttle opener.**

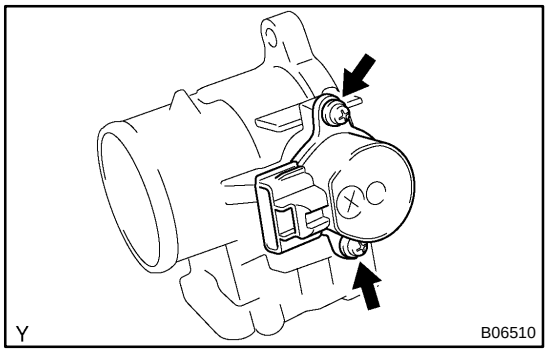

1. REPLACE THROTTLE POTION SENSOR

(a) Remove the 2 screws and throttle position sensor.

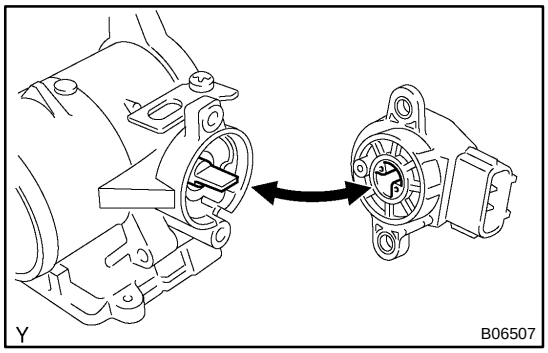

(b) Reinstall a new throttle position sensor.
  (1) Check that the throttle valve is fully close.
  (2) Insert the sensor to the throttle body with it turned counterclockwise by 30˚ to 60˚ against the fully-close valve position.
  (3) By turning the sensor clockwise, tighten the 2 screws.

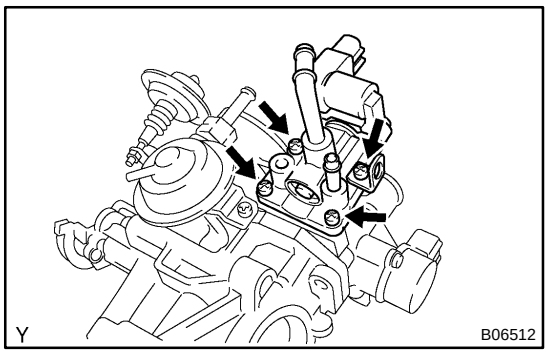

2. REPLACE IAC VALVE

(a) Remove the 4 screws, bracket, IAC valve and gasket.
(b) Place a new gasket on the No.1 throttle body.
(c) Reinstall a new IAC valve with the 4 screws and bracket.

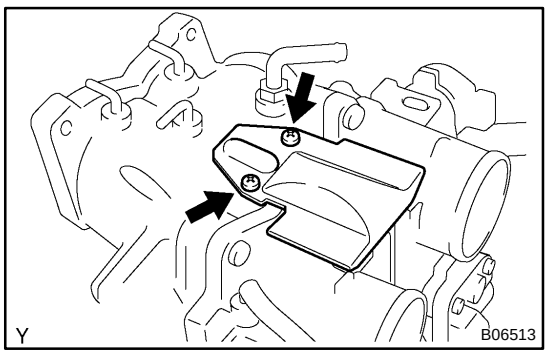

3. REPLACE THROTTLE BODIES

(a) Remove the 2 screws and protector.

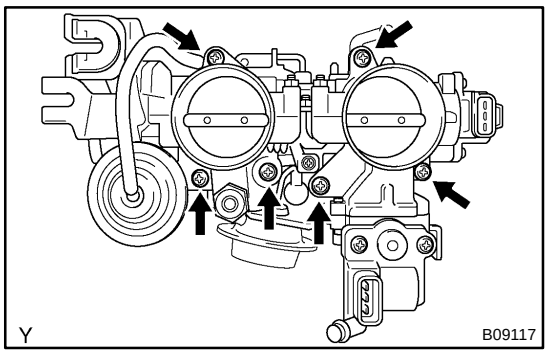

(b) Remove the 6 screws, No.1 throttle body, No.2 throttle body and 2 gaskets from the No.1 intake air control valve.

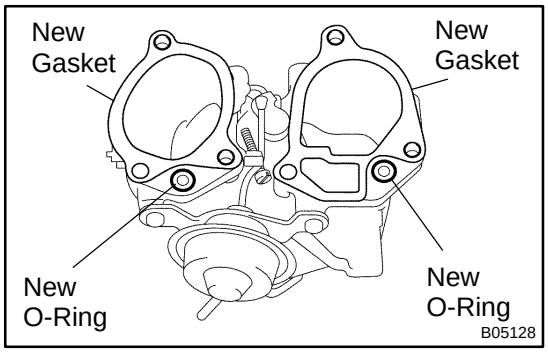

(c) Place 2 new gaskets and 2 new O-rings as shown in the illustration.

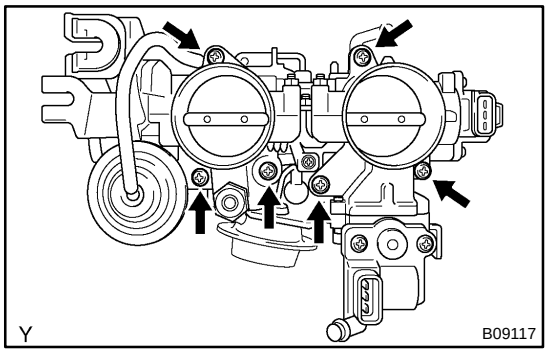

(d) Reinstall a new No.1 throttle body and No.2 throttle body with the 6 screws.
Torque: 6.9 N·m (70 kgf·cm, 61 in.·lbf)

VSV FOR ACOUSTIC CONTROL INDUCTION SYSTEM (ACIS)

SF100-01

COMPONENTS

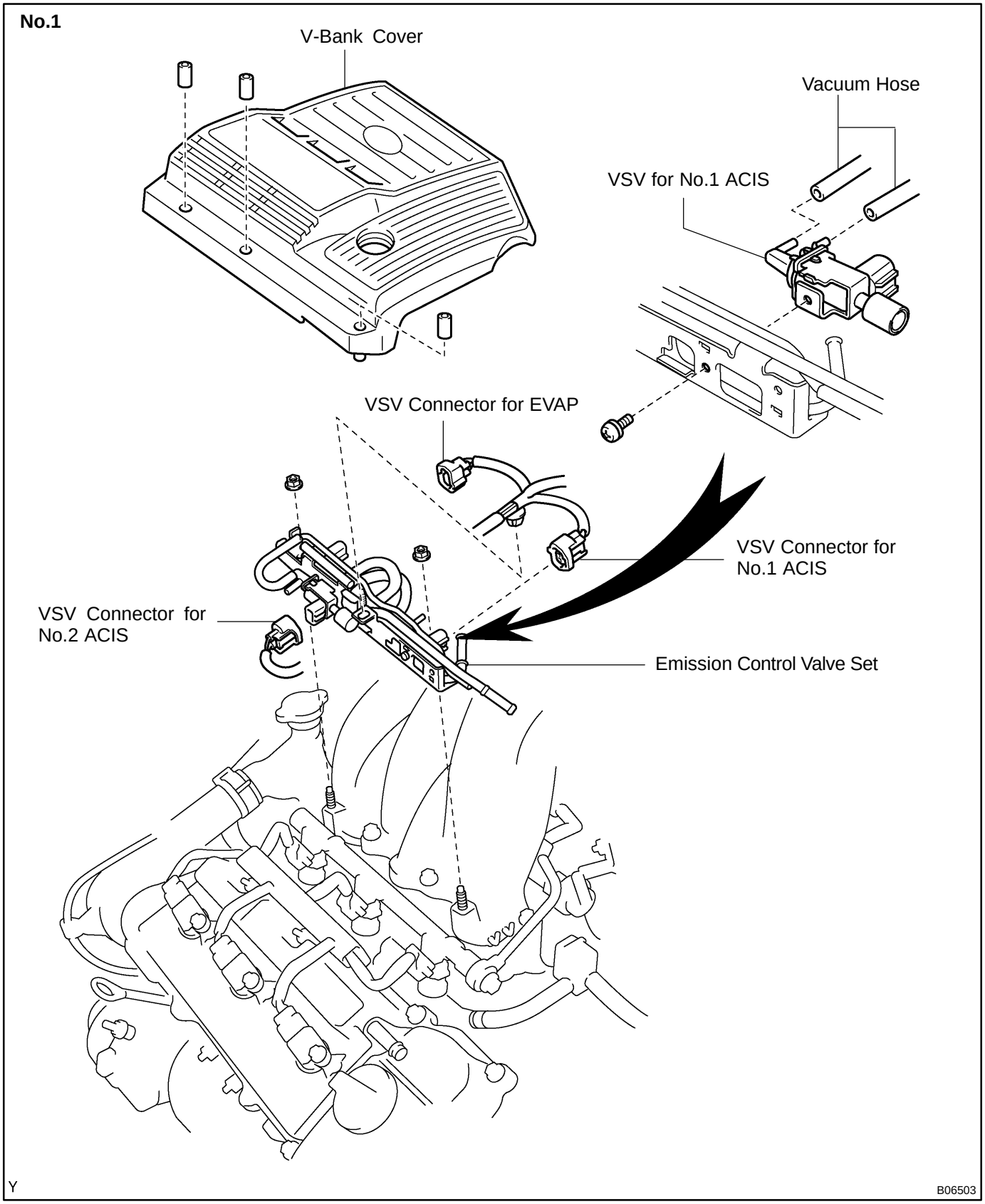

No.2

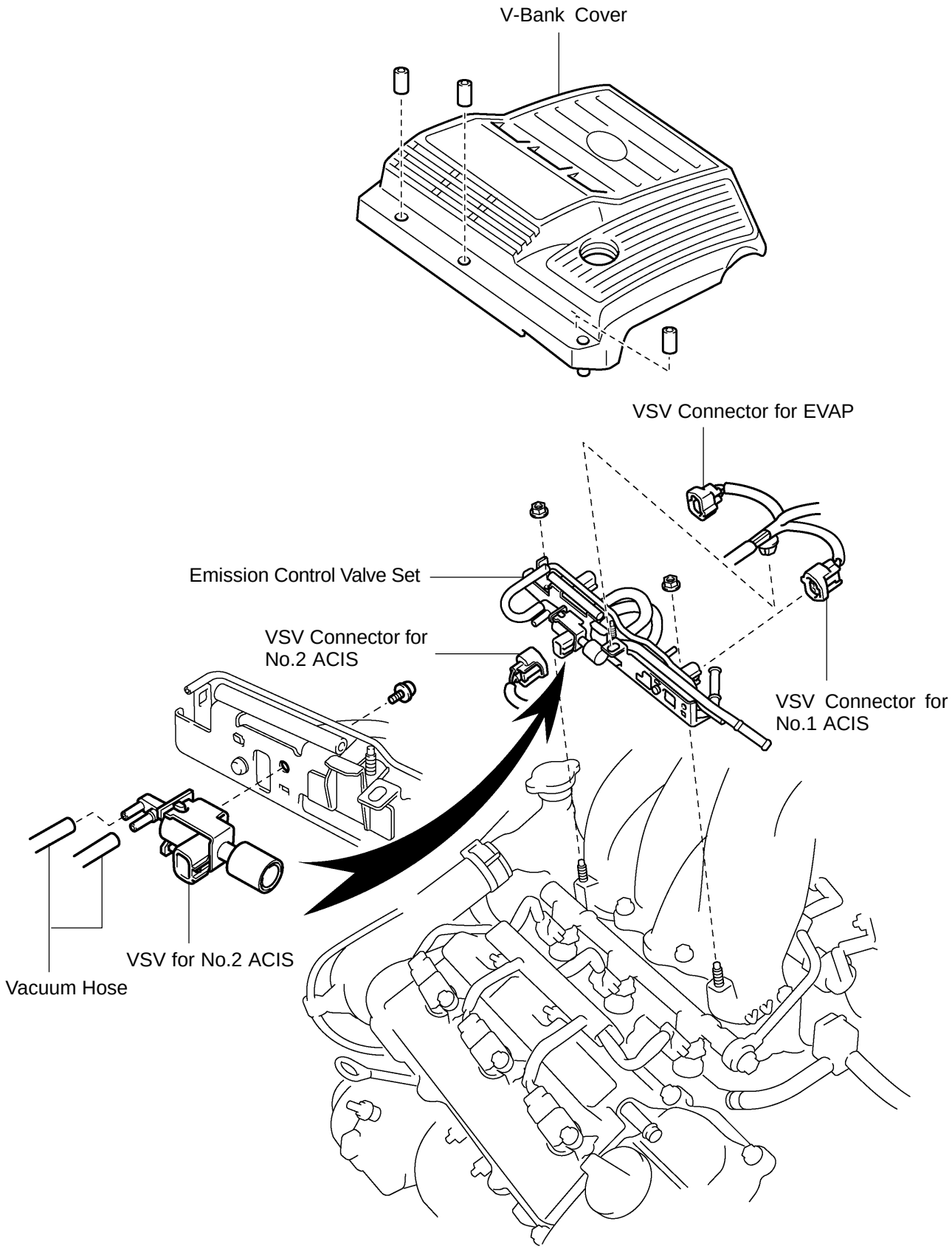
V-Bank Cover
VSV Connector for EVAP
Emission Control Valve Set
VSV Connector for No.2 ACIS
VSV Connector for No.1 ACIS
VSV for No.2 ACIS
Vacuum Hose

Y

B06502

SF06N-03

INSPECTION

1. REMOVE V- BANK COVER, AND EMISSION CONTROL VALVE SET

2. REMOVE VSV

(a) Disconnect the 2 vacuum hoses from the VSV.

(b) Remove the screw and VSV.

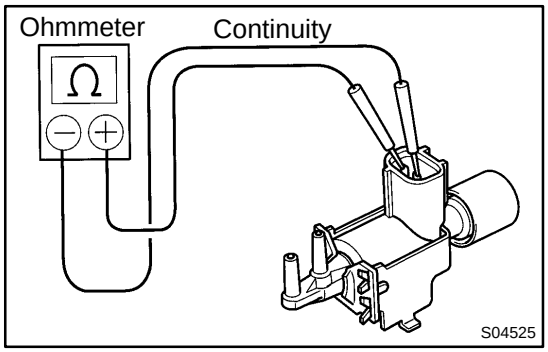

3. INSPECT VSV FOR OPEN CIRCUIT

Using an ohmmeter, check that there is continuity between each terminals.

Resistance: 33 - 39 Ω at 20˚C (68˚F)

If there is no continuity, replace the VSV.

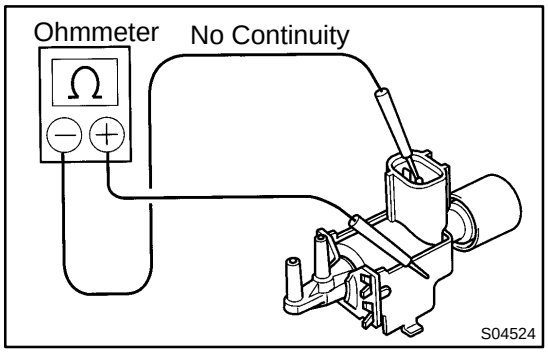

4. INSPECT VSV FOR GROUND

Using an ohmmeter, check that there is no continuity between each terminal and the body.

If there is continuity, replace the VSV.

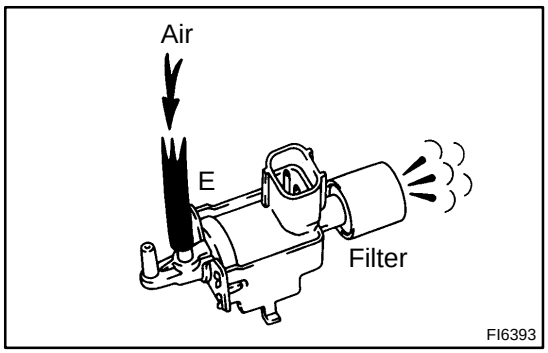

5. INSPECT VSV OPERATION

(a) Check that air flows from port E to the filter.

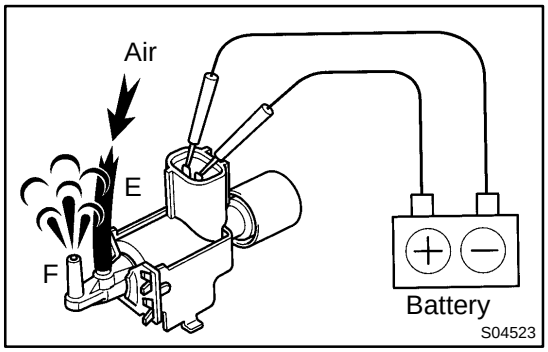

(b) Apply battery voltage across the terminals.

(c) Check that air flows from port E to port F.

If operation is not as specified, replace the VSV.

6. REINSTALL VSV

(a) Install the VSV with the screw.

(b) Connect the 2 vacuum to the VSV.

7. REINSTALL EMISSION CONTROL VALVE SET

8. REINSTALL V-BANK COVER

VSV FOR CANISTER CLOSED VALVE (CCV)

SF16F-01

COMPONENTS

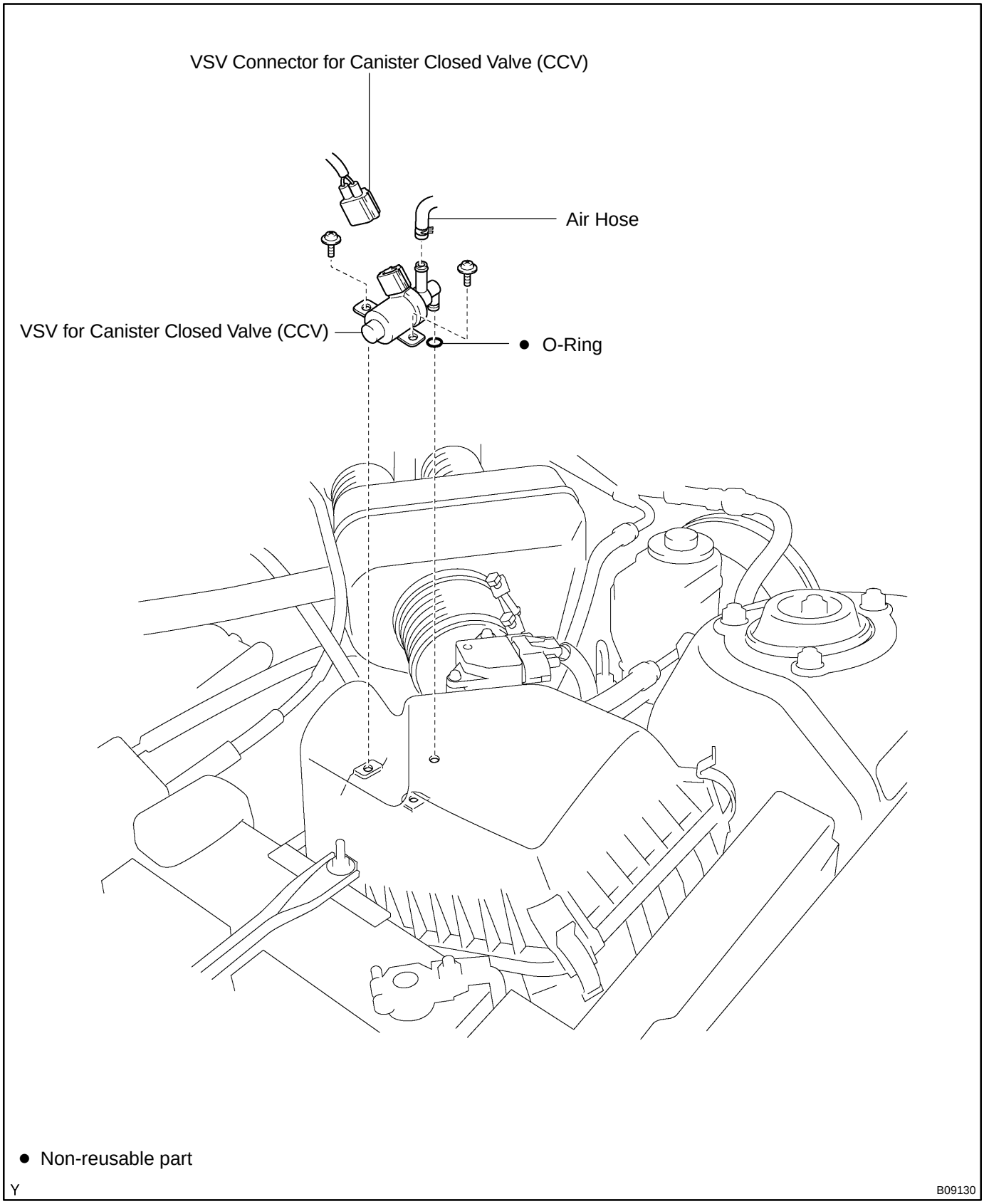

● Non-reusable part

Y

B09130

SF16G-01

INSPECTION

1. REMOVE VSV

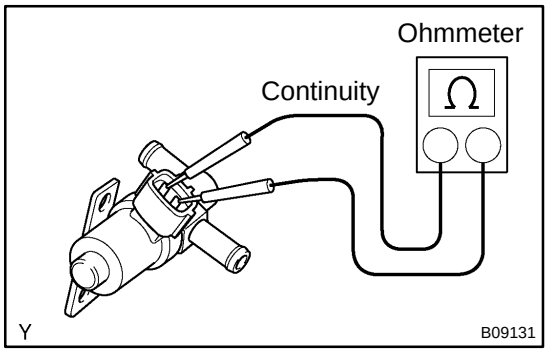

2. INSPECT VSV FOR OPEN CIRCUIT

Using an ohmmeter, check that there is continuity between the terminals.

Resistance:

At 20˚C (68˚F)	25 - 30 Ω
At 120˚C (248˚F)	33 - 42 Ω

If there is no continuity, replace the VSV.

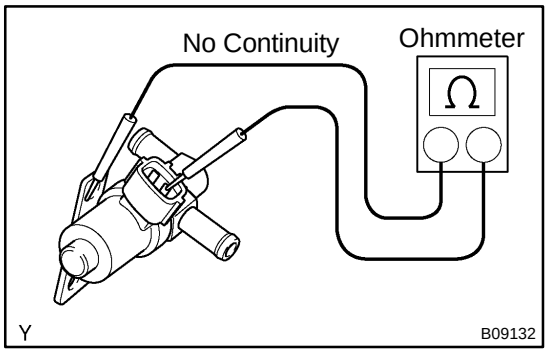

3. INSPECT VSV FOR GROUND

Using an ohmmeter, check that there is no continuity between each terminal and the body.

If there is continuity, replace the VSV.

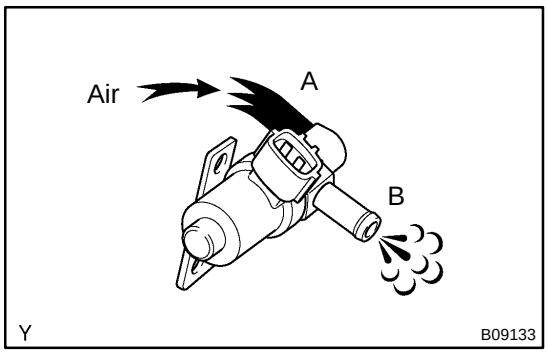

4. INSPECT VSV OPERATION

(a) Check that air flows from ports A to B.

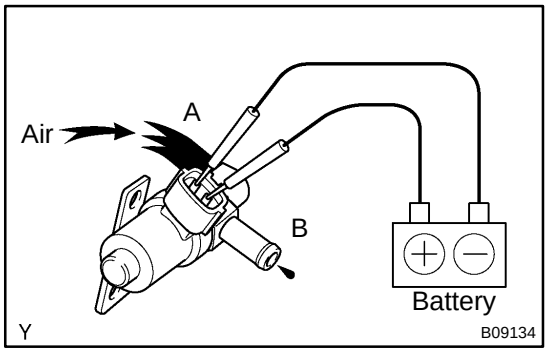

(b) Apply battery positive voltage across the terminals.

(c) Check that air does not flow from ports A to B.

If operation is not as specified, replace the VSV.

5. REINSTALL VSV

VSV FOR EVAPORATIVE EMISSION (EVAP)

COMPONENTS

SF06K-03

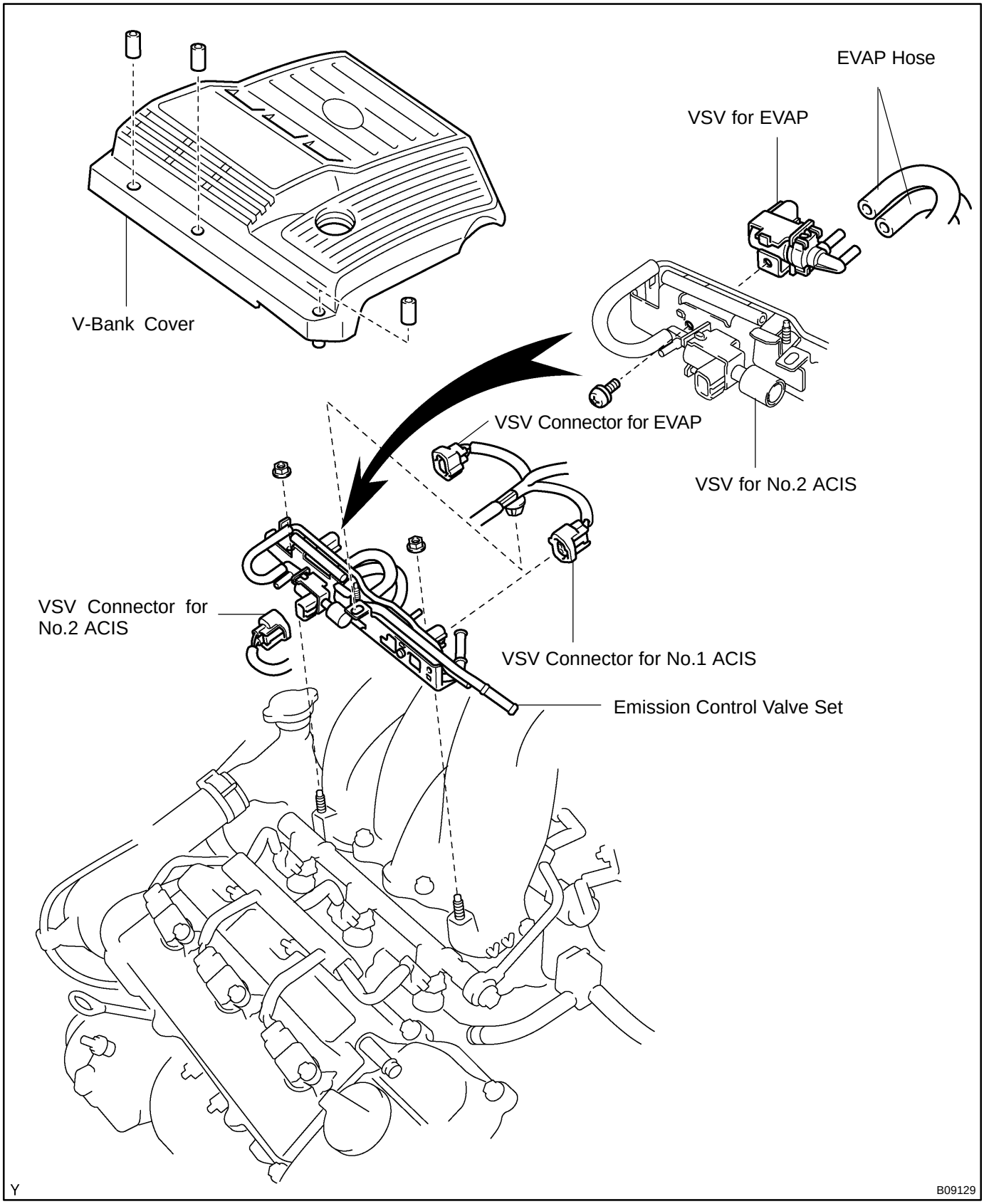

SF06L-03

INSPECTION

1. REMOVE V-BANK COVER AND EMISSION CONTROL VALVE SET

2. REMOVE VSV

(a) Disconnect the 2 EVAP hoses from the VSV.

(b) Remove the screw and VSV.

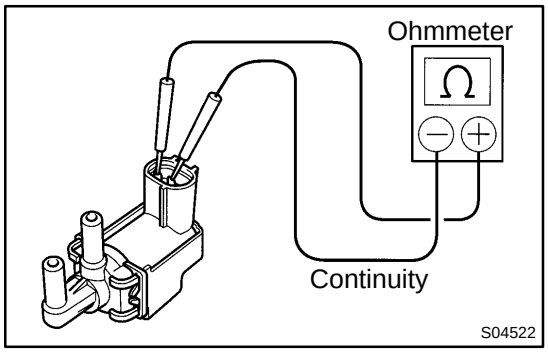

3. INSPECT VSV FOR OPEN CIRCUIT

Using an ohmmeter, check that there is continuity between the terminals.

Resistance: 27 - 33 Ω at 20˚C (68˚F)

If there is no continuity, replace the VSV.

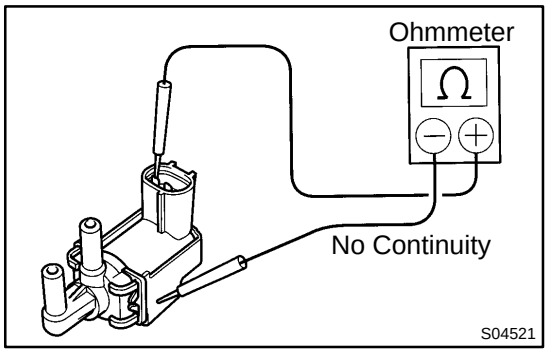

4. INSPECT VSV FOR GROUND

Using an ohmmeter, check that there is no continuity between each terminal and the body.

If there is continuity, replace the VSV.

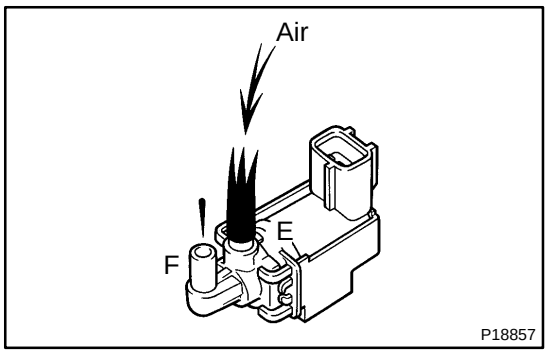

5. INSPECT VSV OPERATION

(a) Check that air flows with difficulty from port E to port F.

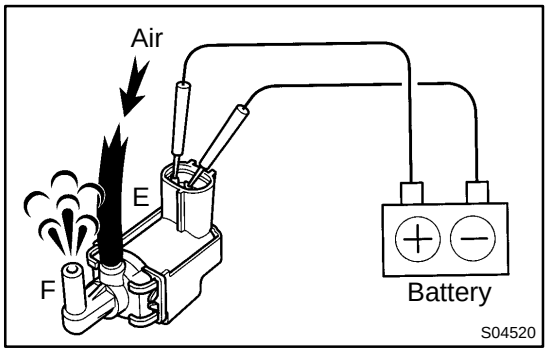

(b) Apply battery voltage across the terminals.

(c) Check that air flows from port E to port F.

If operation is not as specified, replace the VSV.

6. REINSTALL VSV

(a) Install the VSV with the screw.

(b) Connect the 2 EVAP hoses to the VSV.

7. REINSTALL EMISSION CONTROL VALVE SET

8. REINSTALL V-BANK COVER

VSV FOR PRESSURE SWITCHING VALVE

SF14G-01

COMPONENTS

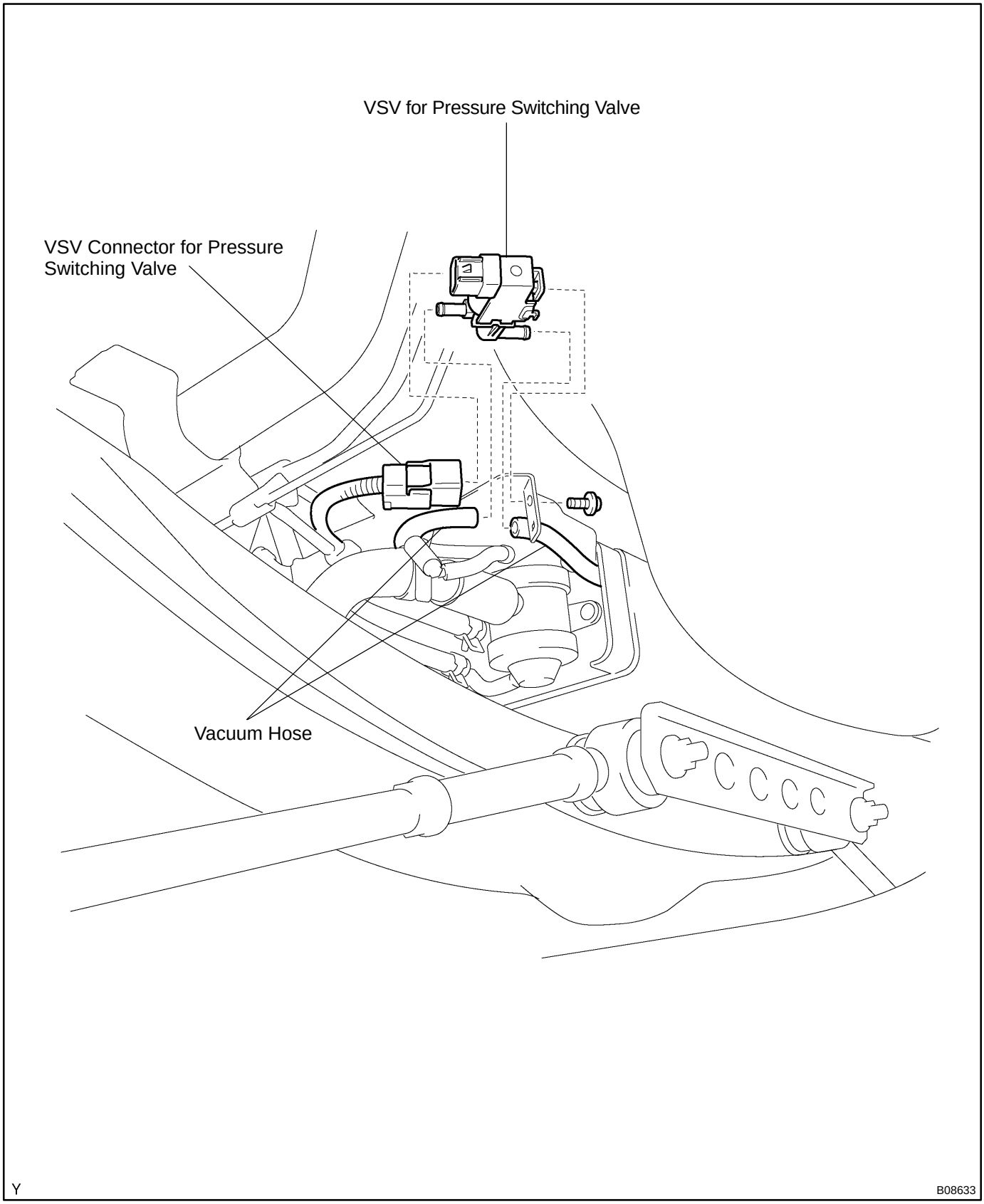

SF14H-01

INSPECTION

1. REMOVE VSV

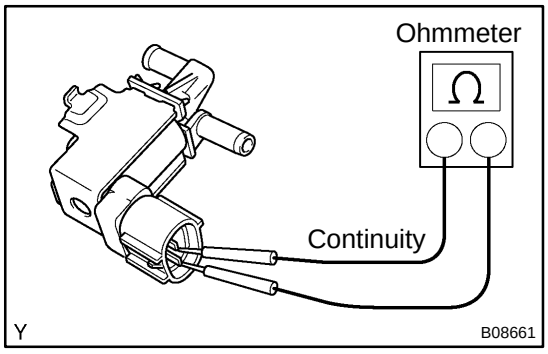

2. INSPECT VSV FOR OPEN CIRCUIT

Using an ohmmeter, check that there is continuity between the terminals.

Resistance:

At 20˚C (68˚F)	37 - 44 Ω
At 120˚C (248˚F)	51 - 62 Ω

If there is no continuity, replace the VSV.

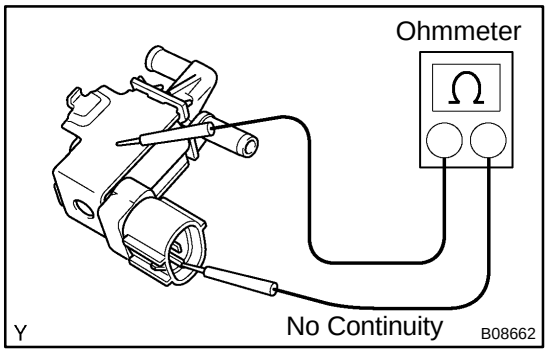

3. INSPECT VSV FOR GROUND

Using an ohmmeter, check that there is no continuity between each terminal and the body.

If there is continuity, replace the VSV.

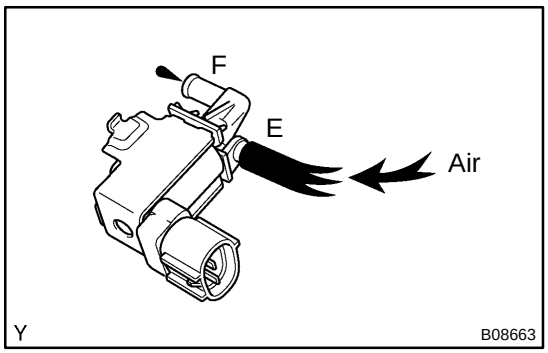

4. INSPECT VSV OPERATION

(a) Check that air does not flow from ports E to F.

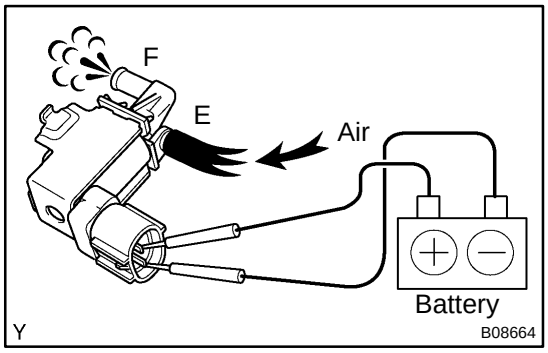

(b) Apply battery positive voltage across the terminals.

(c) Check that air flows from ports E to F.

If operation is not as specified, replace the VSV.

5. REINSTALL VSV

VAPOR PRESSURE SENSOR

COMPONENTS

SF101-02

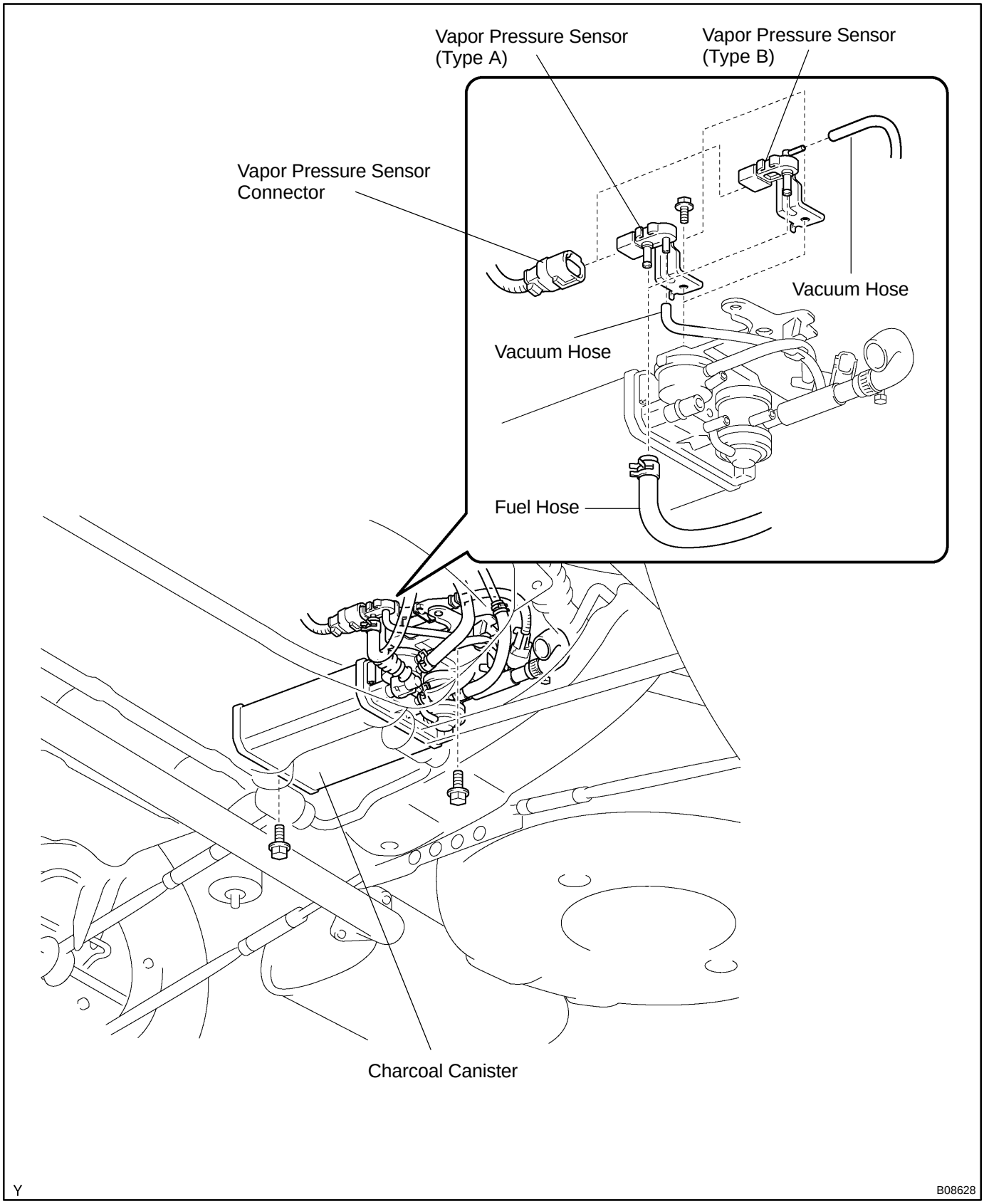

SF06R-03

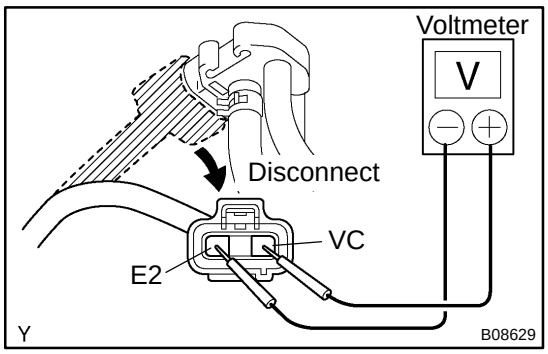

INSPECTION

1. INSPECT POWER SOURCE VOLTAGE OF VAPOR PRESSURE SENSOR

(a) Disconnect the vapor pressure sensor connector.
(b) Turn the ignition switch ON.
(c) Using a voltmeter, measure the voltage between connector terminals VC and E2 of the wiring harness side.
Voltage: 4.5 - 5.5 V
(d) Turn the ignition switch OFF.
(e) Reconnect the vapor pressure sensor connector.

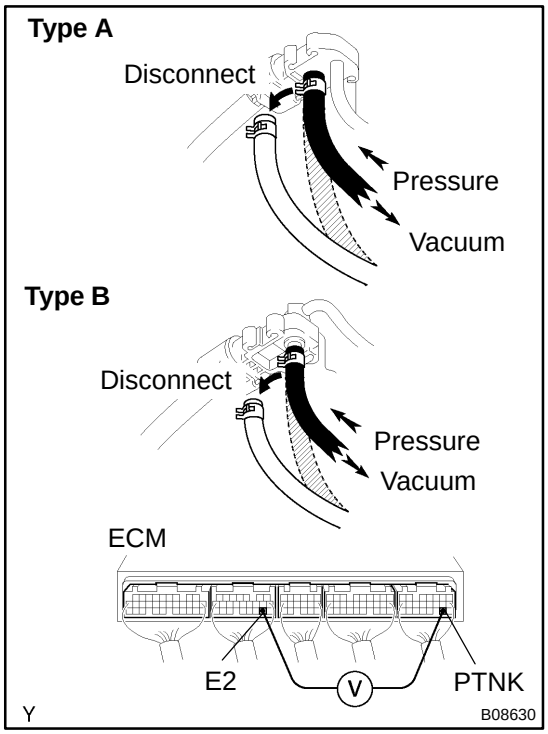

2. INSPECT POWER OUTPUT OF VAPOR PRESSURE SENSOR

(a) Turn the ignition switch ON.
(b) Disconnect the fuel hose from the vapor pressure sensor.
(c) Connect a voltmeter to terminals PTNK and E2 of the ECM, and measure the output voltage under the following conditions:
(1) Apply vacuum (2.0 kPa (15 mmHg, 0.59 in.Hg)) to the vapor pressure sensor.
Voltage: 1.3 - 2.1 V
(2) Release the vacuum from the vapor pressure sensor.
Voltage: 3.0 - 3.6 V
(3) Apply pressure (1.5 kPa (15 gf/cm^2, 0.22 psi)) to the vapor pressure sensor.
Voltage: 4.2 - 4.8 V
(d) Turn the ignition switch OFF.
(e) Reconnect the fuel hose to the vapor pressure sensor.

AIRBAG SENSOR ASSEMBLY (Column Shift)

COMPONENTS

RS0LQ-01

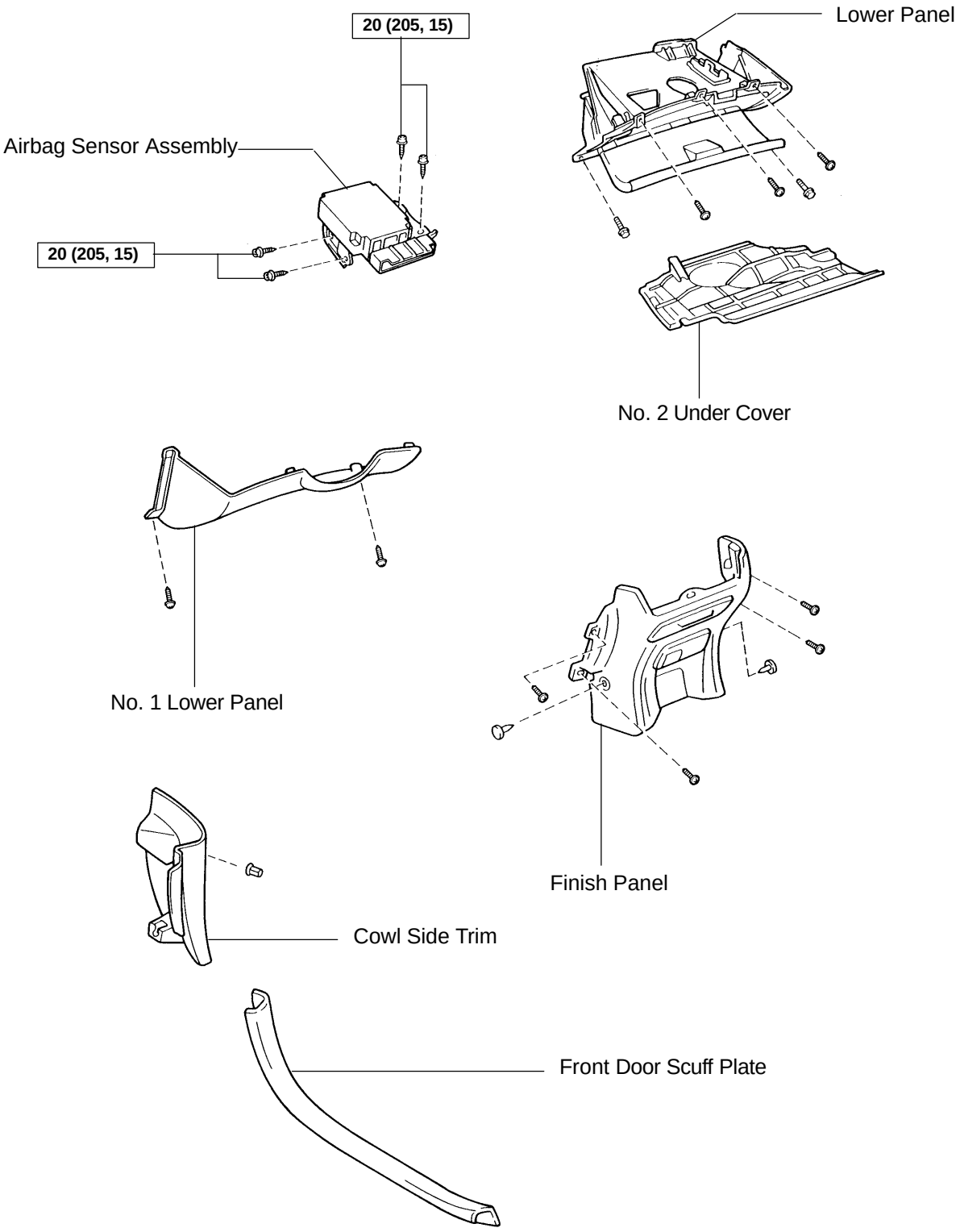

N·m (kgf·cm, ft·lbf) : Specified torque

N

H11909

RS0LS-01

INSPECTION

1. VEHICLE NOT INVOLVED IN COLLISION

Do a diagnostic system check (See page DI-349).

2. VEHICLE INVOLVED IN COLLISION AND AIRBAG IS NOT DEPLOYED

Do a diagnostic system check (See page DI-349).

3. VEHICLE INVOLVED IN COLLISION AND AIRBAG IS DEPLOYED

Replace the airbag sensor assembly (See page DI-349).

RS0LU-01

INSTALLATION

NOTICE:

- **Never use SRS parts from another vehicle. When replacing parts, replace them with new parts.**
- **Never reuse the airbag sensor assembly involved in a collision when the airbag has deployed.**
- **Never repair a sensor in order to reuse it.**

HINT:

For step 2 to 7, refer to page BO-97 .

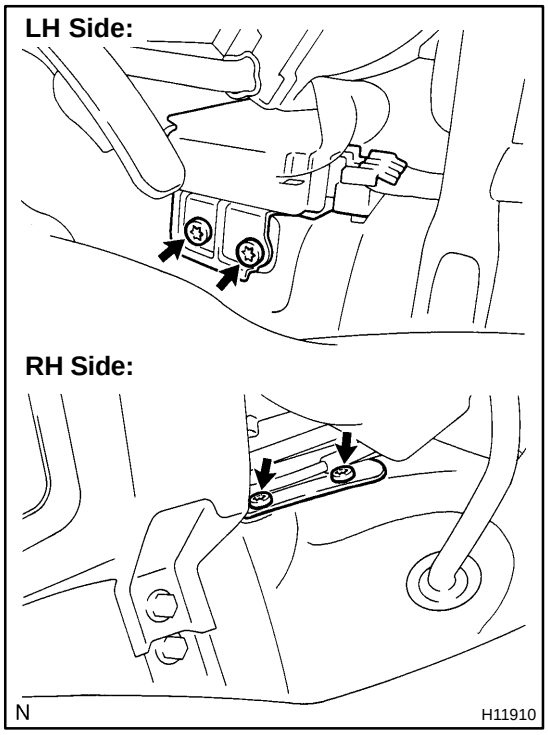

1. INSTALL AIRBAG SENSOR ASSEMBLY

(a) Using a torx wrench, install the airbag sensor assembly with the 3 screws.

Torx wrench: T40 (Part No.09042-00020 or locally manufactured tool)

Torque: 20 N·m (205 kgf·cm, 15 ft·lbf)

(b) Connect the airbag sensor connectors.

NOTICE:

- **Connection of the connector is done after the sensor assembly has been installed.**
- **Make sure the sensor assembly is installed with the specified torque.**
- **If the sensor assembly has been dropped, or there are cracks, dents or other defects in the case, bracket or connector, replace the sensor assembly with a new one.**
- **When installing the senor assembly, take care that the SRS wiring does not interfere with other parts and is not pinched between other parts.**
- **After installing, shake the sensor assembly to check that there is no looseness.**

2. INSTALL FINISH PANEL

3. INSTALL LOWER PANEL

4. INSTALL NO. 2 UNDER COVER

5. INSTALL NO. 1 LOWER PANEL

6. INSTALL COWL SIDE TRIM LH

7. INSTALL FRONT DOOR SCUFF PLATE LH

RS0LR-01

REMOVAL

NOTICE:

Do not open the cover or the case of the ECU and various electrical devices unless absolutely necessary.

(If the IC terminals are touched, the IC may be destroyed by static electricity.)

HINT:

For step 1 to 6, refer to page BO-90 .

1. **REMOVE FRONT DOOR SCUFF PLATE LH**
2. **REMOVE COWL SIDE TRIM LH**
3. **REMOVE NO. 1 LOWER PANEL**
4. **REMOVE NO. 2 UNDER COVER**
5. **REMOVE LOWER PANEL**
6. **REMOVE FINISH PANEL**

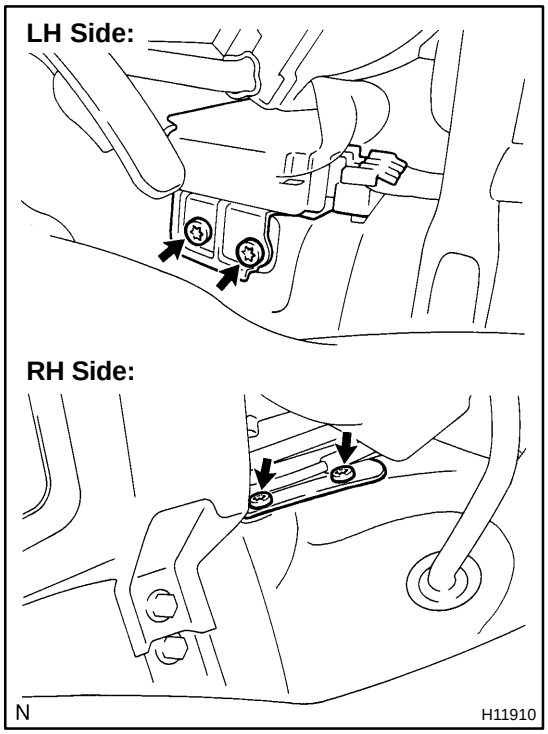

7. **REMOVE AIRBAG SENSOR ASSEMBLY**

(a) Disconnect the airbag sensor connectors.

NOTICE:

Disconnect the connectors with the airbag sensor assembly installed.

(b) Using a torx wrench, remove the 4 screws and airbag sensor assembly.

Torx wrench: T40 (Part No.09042-00020 or locally manufactured tool)

RS0LT-01

REPLACEMENT

REPLACEMENT REQUIREMENTS

In the following cases, replace the airbag sensor assembly.

- If the SRS has been deployed in a collision.
- If the airbag sensor assembly has been found to be faulty in troubleshooting.
- If the airbag sensor assembly has been dropped.

CAUTION:

For removal and installation of the airbag sensor assembly, see page RS-68 and RS-71 . Be sure to follow the correct procedure.

AIRBAG SENSOR ASSEMBLY (Floor Shift)

RS0LL-01

COMPONENTS

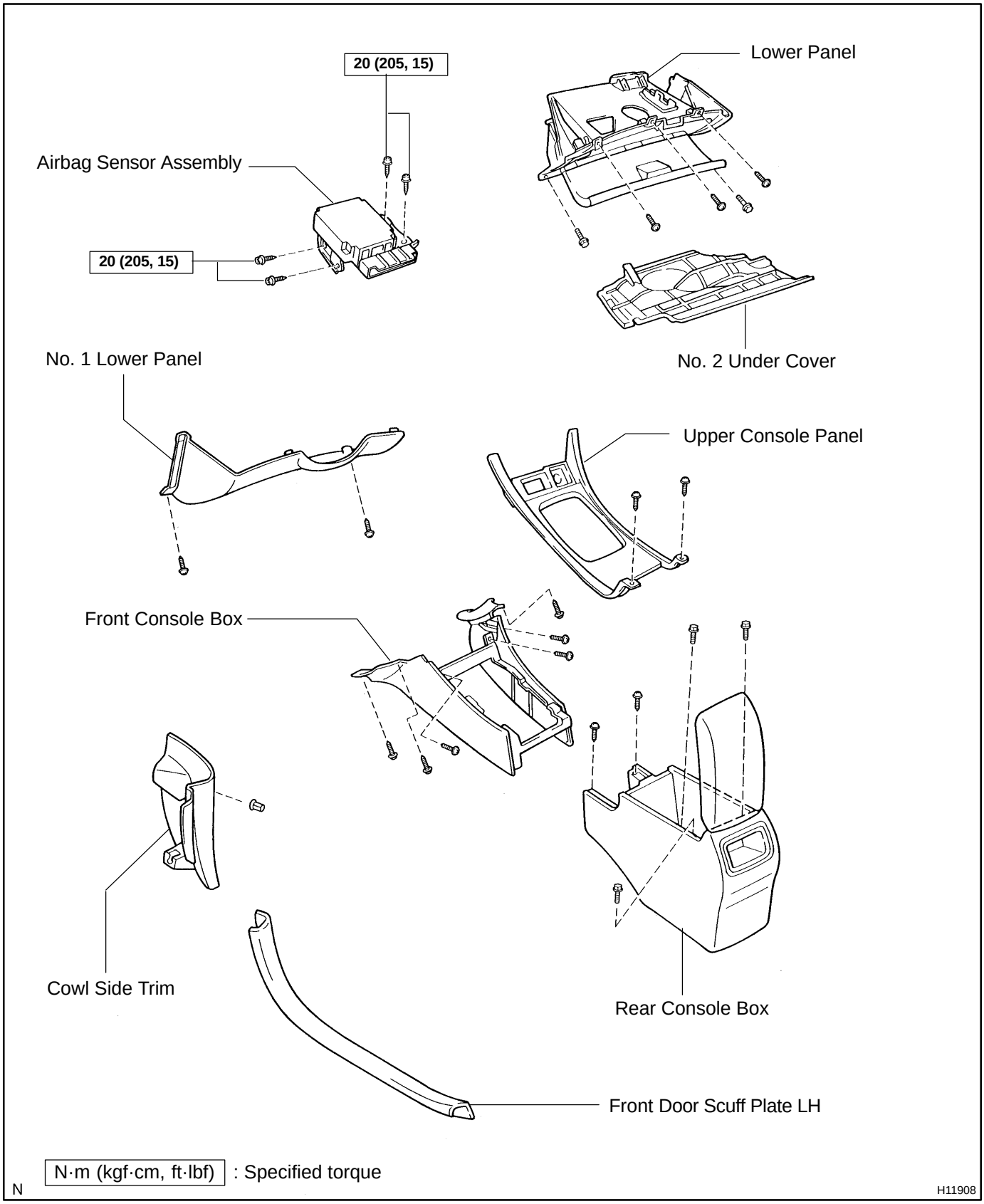

RS0LN-01

INSPECTION

1. VEHICLE NOT INVOLVED IN COLLISION

Do a diagnostic system check (See page DI-349).

2. VEHICLE INVOLVED IN COLLISION AND AIRBAG IS NOT DEPLOYED

Do a diagnostic system check (See page DI-349).

3. VEHICLE INVOLVED IN COLLISION AND AIRBAG IS DEPLOYED

Replace the airbag sensor assembly (See page DI-349).

RS0LP-01

INSTALLATION

NOTICE:

- **Never use SRS parts from another vehicle. When replacing parts, replace them with new parts.**
- **Never reuse the airbag sensor assembly involved in a collision when the airbag has deployed.**
- **Never repair a sensor in order to reuse it.**

HINT:

For step 2 to 9, refer to page BO-97 .

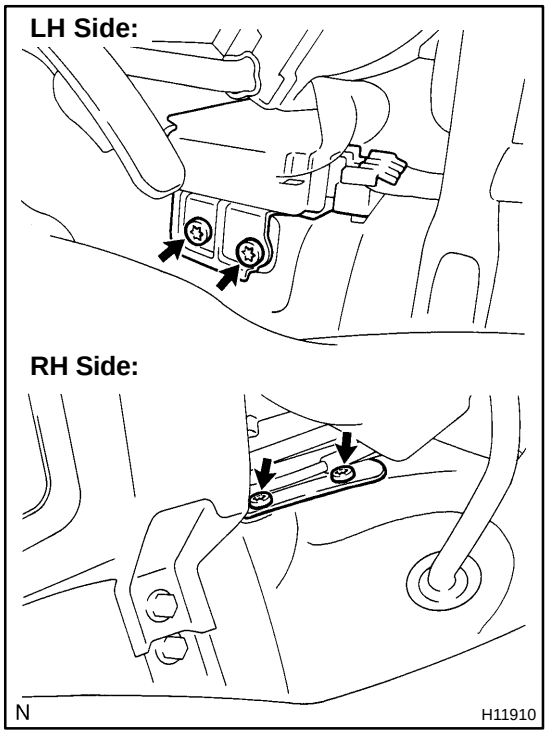

1. INSTALL AIRBAG SENSOR ASSEMBLY

(a) Using a torx wrench, install the airbag sensor assembly with the 4 screws.

Torx wrench: T40 (Part No.09042-00020 or locally manufactured tool)

Torque: 20 N·m (205 kgf·cm, 15 ft·lbf)

(b) Connect the airbag sensor connectors.

NOTICE:

- **Connection of the connector is done after the sensor assembly has been installed.**
- **Make sure the sensor assembly is installed with the specified torque.**
- **If the sensor assembly has been dropped, or there are cracks, dents or other defects in the case, bracket or connector, replace the sensor assembly with a new one.**
- **When installing the senor assembly, take care that the SRS wiring does not interfere with other parts and is not pinched between other parts.**
- **After installing, shake the sensor assembly to check that there is no looseness.**

2. INSTALL FRONT CONSOLE

3. INSTALL REAR CONSOLE BOX

4. INSTALL UPPER CONSOLE PANEL

5. INSTALL LOWER PANEL

6. INSTALL NO. 2 UNDER COVER

7. INSTALL NO. 1 LOWER PANEL

8. INSTALL COWL SIDE TRIM LH

9. INSTALL FRONT DOOR SCUFF PLATE LH

RS0LM-01

REMOVAL

NOTICE:

Do not open the cover or the case of the ECU and various electrical devices unless absolutely necessary.

(If the IC terminals are touched, the IC may be destroyed by static electricity.)

HINT:

For step 1 to 8, refer to page BO-90 .

1. **REMOVE FRONT DOOR SCUFF PLATE LH**
2. **REMOVE COWL SIDE TRIM LH**
3. **REMOVE NO. 1 LOWER PANEL**
4. **REMOVE NO. 2 UNDER COVER**
5. **REMOVE LOWER PANEL**
6. **REMOVE UPPER CONSOLE PANEL**
7. **REMOVE REAR CONSOLE BOX**
8. **REMOVE FRONT CONSOLE BOX**

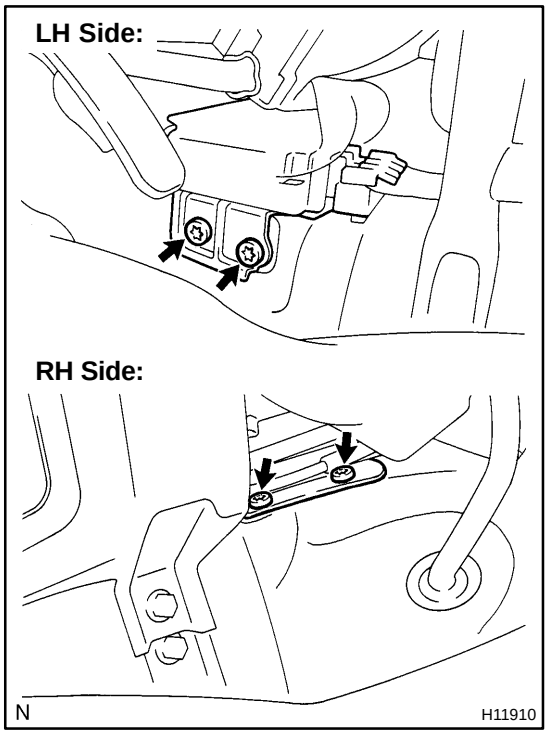

9. **REMOVE AIRBAG SENSOR ASSEMBLY**

(a) Disconnect the airbag sensor connectors.

NOTICE:

Disconnect the connectors with the airbag sensor assembly installed.

(b) Using a torx wrench, remove the 4 screws and airbag sensor assembly.

Torx wrench: T40 (Part No.09042-00020 or locally manufactured tool)

RS0LO-01

REPLACEMENT

REPLACEMENT REQUIREMENTS

In the following cases, replace the airbag sensor assembly.

- If the SRS has been deployed in a collision.
- If the airbag sensor assembly has been found to be faulty in troubleshooting.
- If the airbag sensor assembly has been dropped.

CAUTION:

For removal and installation of the airbag sensor assembly, see page RS-63 and RS-66 . Be sure to follow the correct procedure.

FRONT AIRBAG SENSOR

RS0ER-02

COMPONENTS

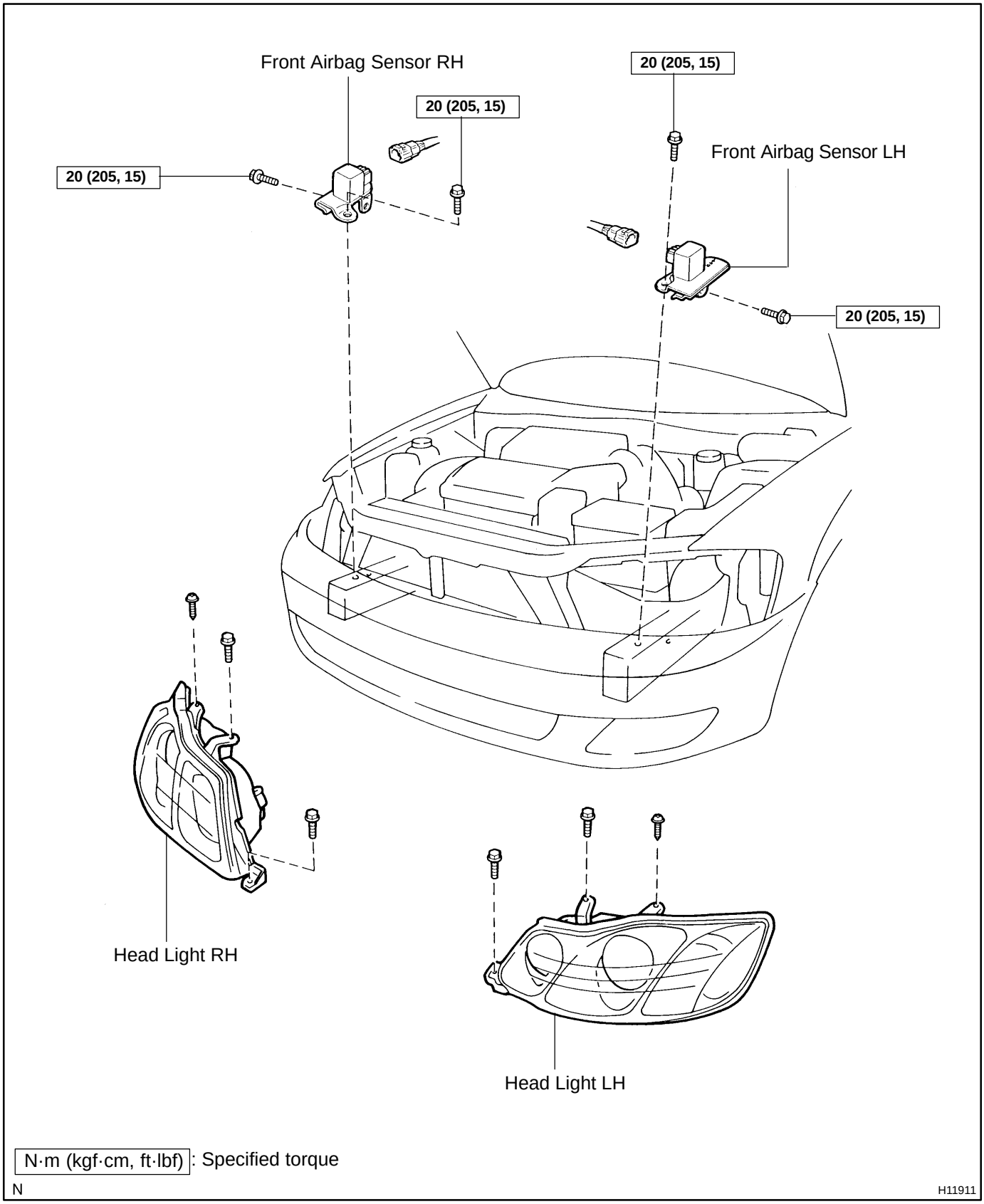

N·m (kgf·cm, ft·lbf): Specified torque

N

H11911

RS01N-28

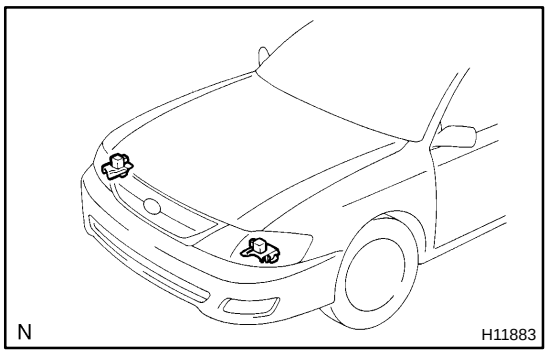

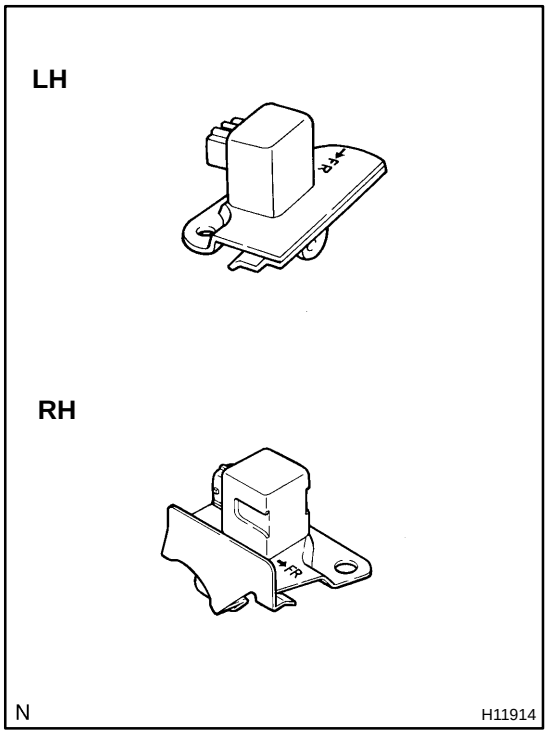

INSPECTION

1. VEHICLES NOT INVOLVED IN COLLISION

Do a diagnostic system check (See page DI-349).

2. VEHICLES INVOLVED IN COLLISION

(a) Do a diagnostic system check (See page DI-349).

(b) If the front fender of the car or its periphery is damaged, do a visual check for damage to the front airbag sensor, which includes the following items even if the airbag was not deployed:

- Check the bracket deformation.
- Check the paint peeling off the bracket.
- Check the cracks, dents or chips in the case.
- Check the cracks, dents, chipping and scratches in the connector.
- Check the peeling off of the label or damage to the serial number.

RS0LW-01

INSTALLATION

1. INSTALL FRONT AIRBAG SENSOR LH AND RH

(a) Install the front airbag sensors with the 4 bolts.
Torque: 20 N·m (205 kgf·cm, 15 ft·lbf)

NOTICE:

- **Connection of the connector is done after the sensor assembly has been installed.**
- **Make sure the sensor is installed with the specified torque.**
- **If the sensor has been dropped, or there are cracks, dents or other defects in the case, brackets or connector, replace the removed sensor with a new one.**
- **The front sensor is equipped with an electrical connection check mechanism. Be sure to lock this mechanism securely when connecting the connector. If the connector is not securely locked, a malfunction code will be detected by the diagnostic system.**

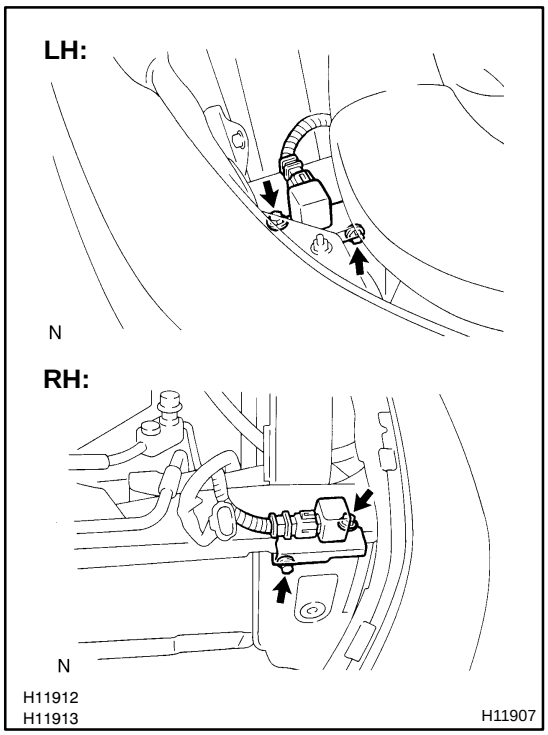

HINT:
Install the front airbag sensor with the arrow on the sensor facing toward the front of the vehicle.

(b) Connect the front airbag sensor connector.

2. INSTALL HEAD LIGHT

Install head lights with the 4 bolts and 2 screws (See page BE-23).

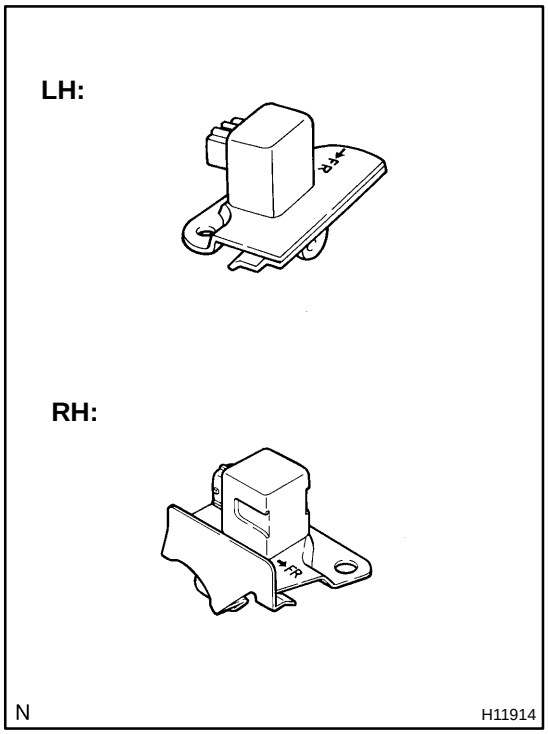

RS0LV-01

REMOVAL

NOTICE:

- **If the wiring connector of the SRS is disconnected with the ignition switch at ON or ACC position, DTCs will be recorded.**
- **Never use SRS parts from another vehicle. When replacing parts, replace them with new parts.**
- **Never reuse the sensor involved in a collision when the SRS has deployed.**
- **Never repair a sensor in order to reuse it.**

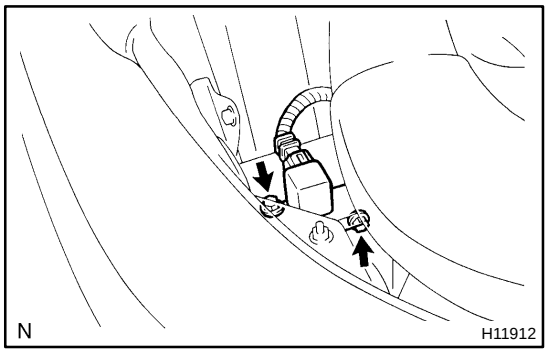

1. LH:

REMOVE FRONT AIRBAG SENSOR

(a) Remove the 2 bolts, screw and head light LH.

(b) Disconnect the connector.

NOTICE:

Disconnect the connector with sensor assembly installed.

(c) Remove the 2 bolts and front airbag sensor LH.

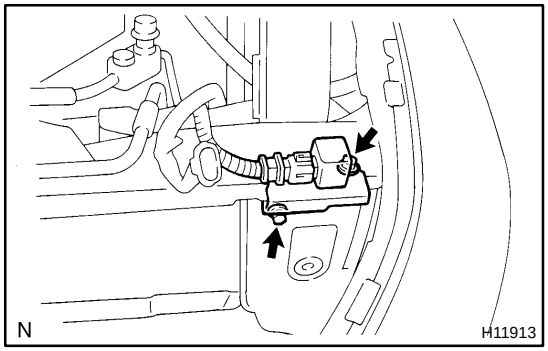

2. RH:

REMOVE FRONT AIRBAG SENSOR

(a) Remove the 2 bolts, screw and head light RH.

(b) Disconnect the connector.

NOTICE:

Disconnect the connector with sensor assembly installed.

(c) Remove the 2 bolts and front airbag sensor RH.

RS01O-16

REPLACEMENT

REPLACEMENT REQUIREMENTS

In the following cases, replace the front airbag sensor.

- If the SRS has been deployed in a collision. (Replace both the left and right airbag sensors.)
- If the front airbag sensor has been found to be faulty in troubleshooting.
- If the front airbag sensor has been found to be faulty during checking items (See page RS-74).
- If the front airbag sensor has been dropped.

CAUTION:

For removal and installation of the front airbag sensor, see page RS-73 and RS-76 . Be sure to follow the correct procedure.

FRONT PASSENGER AIRBAG ASSEMBLY

RS014-32

COMPONENTS

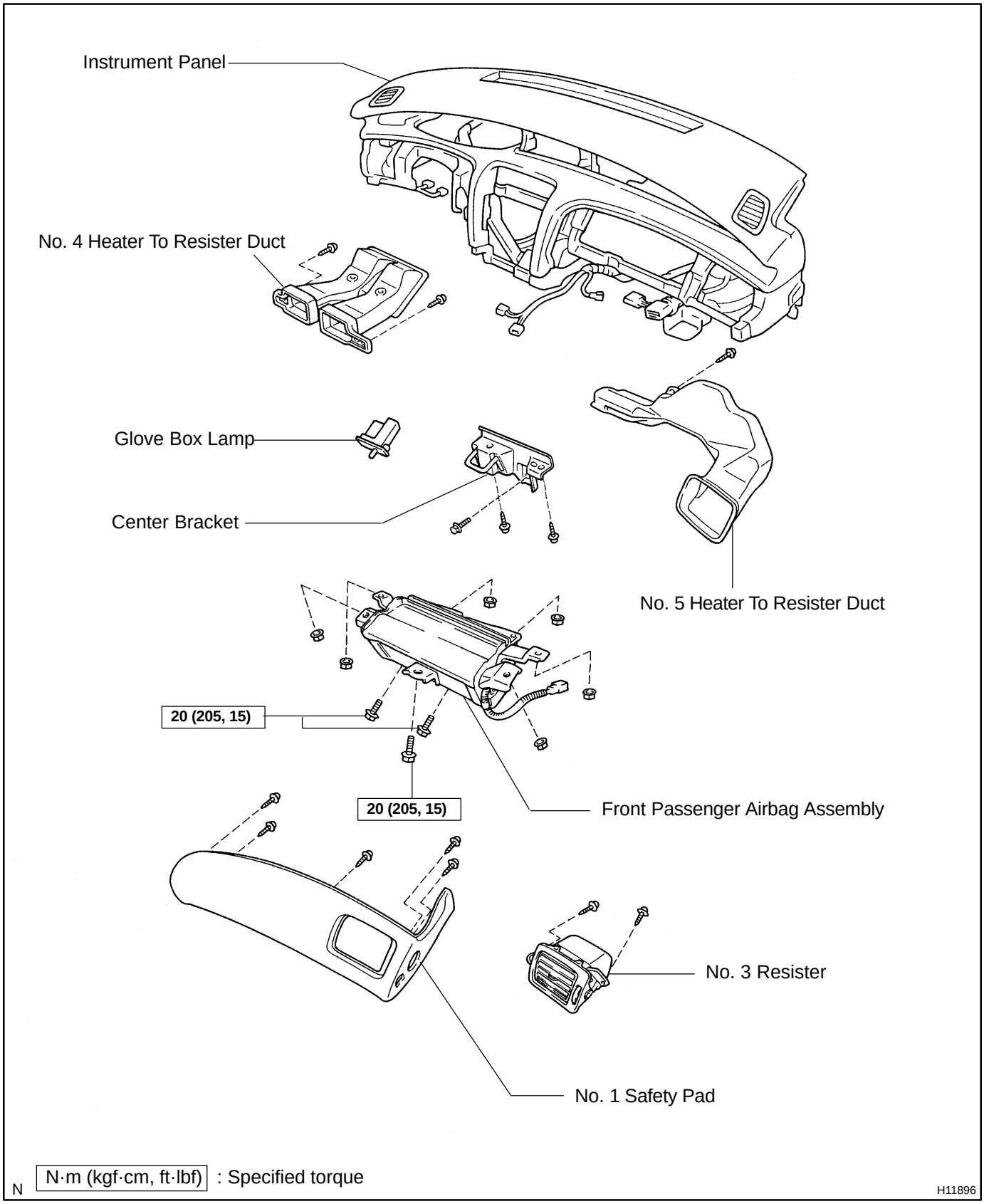

RS0L7-01

DISPOSAL

HINT:

When scrapping vehicle equipped with an SRS or disposing of a front passenger airbag assembly, always first deploy the airbag in accordance with the procedure described below. If any abnormality occurs with the airbag deployment, contact the SERVICE DEPT. of TOYOTA MOTOR SALES, U.S.A., INC.

CAUTION:

- **Never dispose of a front passenger airbag assembly which has an undeployed airbag.**
- **The airbag produces a sizeable exploding sound when it deploys, so perform the operation out-of-doors and where it will not create a nuisance to nearby residents.**

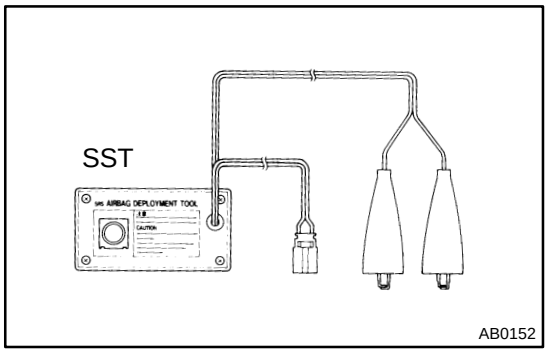

- **When deploying the airbag, always use the specified SST (SRS Airbag Deployment Tool). Perform the operation in a place away from electrical noise.**
  SST 09082-00700
- **When deploying an airbag, perform the operation at least 10 m (33 ft) away from the front passenger airbag assembly.**
- **The front passenger airbag assembly is very hot when the airbag is deployed, so leave it alone for at least 30 minutes after deployment.**
- **Use gloves and safety glasses when handling a front passenger airbag assembly with the deployed airbag.**
- **Always wash your hands with water after completing the operation.**
- **Do not apply water, etc. to a front passenger airbag assembly with the deployed airbag.**

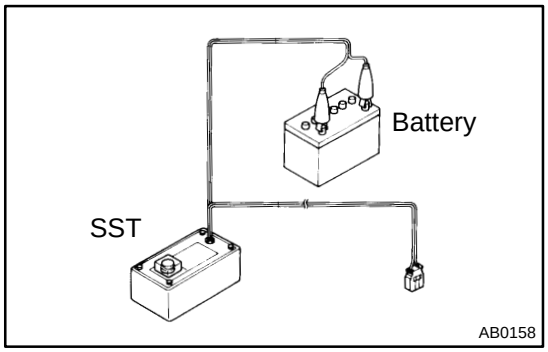

1. AIRBAG DEPLOYMENT WHEN SCRAPPING VEHICLE

HINT:

Have a battery ready as the power source to deploy the airbag.

(a) Check functioning of the SST (See step 1-(a) on page RS-17).
SST 09082-00700

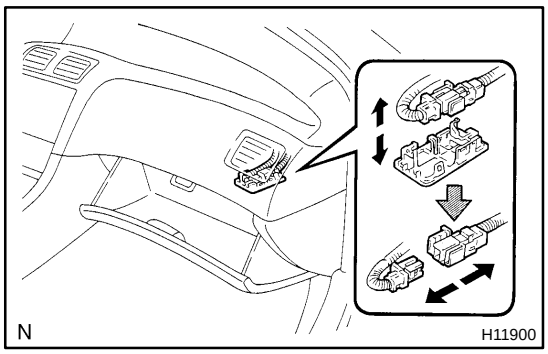

(b) Disconnect the airbag connector.

(1) Using a screwdriver, pry out the glove compartment door finish plate inside the lower panel.

HINT:

Tape the screwdriver tip before use.

(2) Remove the connector from the glove compartment door finish plate.

NOTICE:

When handling the airbag connector, take care not to damage the airbag wire harness.

(3) Disconnect the airbag connector.

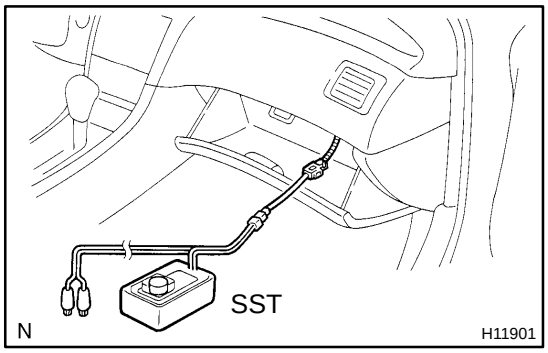

(c) Install the SST.

(1) Connect the connectors of the 2 SST to the front passenger airbag assembly connector.

SST 09082-00700, 09082-00760

NOTICE:

To avoid damaging the SST connector and wire harness, do not lock the secondary lock of the twin lock.

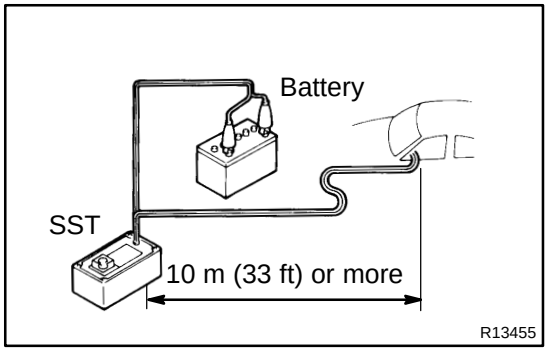

(2) Move the SST to at least 10 m (33 ft) away from the front of the vehicle.

(3) Close all the doors and windows of the vehicle.

NOTICE:

Take care not to damage the SST wire harness.

(4) Connect the SST red clip to the battery positive (+) terminal and the black clip to the negative (-) terminal.

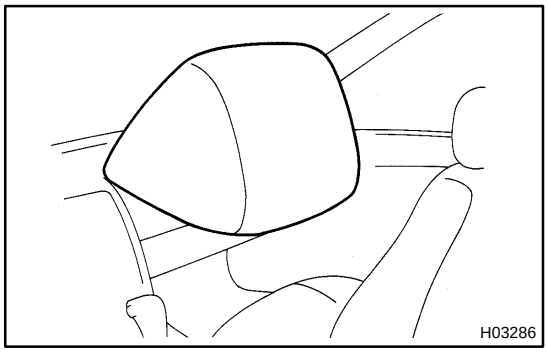

(d) Deploy the airbag.

(1) Check that no one is inside the vehicle or within 10 m (33 ft) area around the vehicle.

(2) Press the SST activation switch and deploy the airbag.

CAUTION:

- **The front passenger airbag assembly is very hot when the airbag is deployed, so leave it alone for at least 30 minutes after deployment.**
- **Use gloves and safety glasses when handling the front passenger airbag assembly with the deployed airbag.**
- **Always wash your hands with water after completing the operation.**
- **Do not apply water, etc. to the front passenger airbag assembly with the deployed airbag.**
- **When scrapping a vehicle, deploy the airbag and scrap the vehicle with the front passenger airbag assembly still installed.**
- **When moving a vehicle for scrapping which has the front passenger airbag assembly with the deployed airbag, use gloves and safety glasses.**

HINT:

The airbag deploys simultaneously as the LED of the SST activation switch lights up.

2. DEPLOYMENT WHEN DISPOSING OF FRONT PASSENGER AIRBAG ASSEMBLY ONLY

NOTICE:

- **When disposing of the front passenger airbag assembly only, never use the customer's vehicle to deploy the airbag.**
- **Be sure to follow the procedure given below when deploying the airbag.**

HINT:

Have a battery ready as the power source to deploy the airbag.

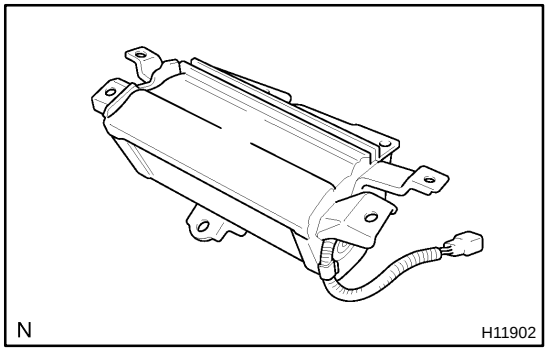

(a) Remove the front passenger airbag assembly (See page RS-28).

CAUTION:

- **When removing the front passenger airbag assembly, work must be started 90 seconds after the ignition switch is turned to the "LOCK" position and the negative (-) terminal cable is disconnected from the battery.**
- **When storing the front passenger airbag assembly, keep the upper surface of the airbag deployment side facing upward.**

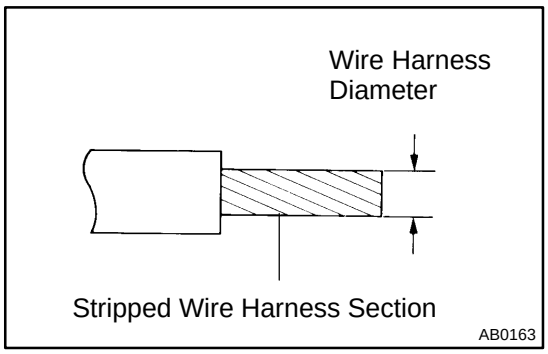

(b) Using a service-purpose wire harness, tie down the front passenger airbag assembly to the tire.

Wire harness: Stripped wire harness section 1.25 mm^2 or more (0.0019 $in.^2$ or more)

CAUTION:

If the front passenger airbag assembly is tied down with too thin wire harness, it may snap. This is highly dangerous. Always use a wire harness which is at least 1.25 mm^2 (0.0019 in^2.).

HINT:

To calculate the square of the stripped wire harness section:

Square = 3.14 X $(Diameter)^2$ divided by 4

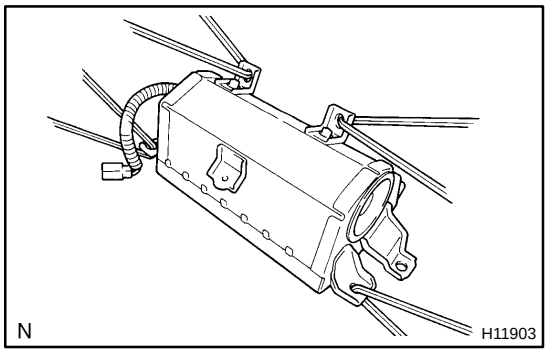

(1) Pass the wire harness though the installation holes, as shown in the illustration.

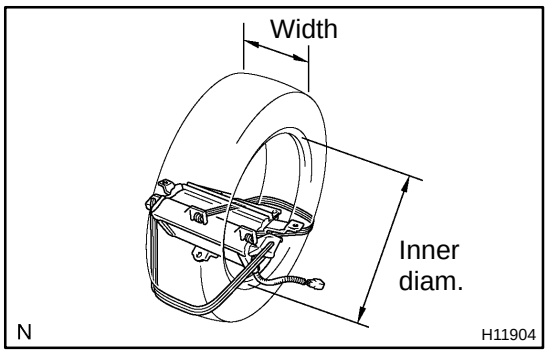

(2) Position the front passenger airbag assembly inside the tire with the airbag deployment side facing inside.

Tire size: Must exceed the following dimensions-
Width: 185 mm (7.28 in.)
Inner diameter: 360 mm (14.17 in.)

CAUTION:

- **Make sure that the wire harness is tight. It is very dangerous if looseness in the wire harness results in the front passenger airbag assembly coming free due to the shock from the airbag deploying.**
- **Always tie down the front passenger airbag assembly with the airbag deployment side facing inside.**

NOTICE:

The tire will be marked by the airbag deployment, so when disposing of the airbag use a redundant tire.

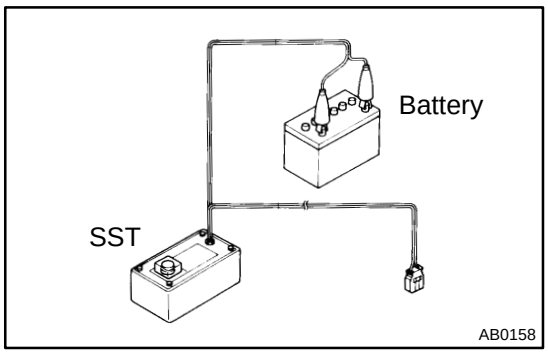

(c) Check functioning of the SST (See step 1-(a) on page RS-17).
SST 09082-00700

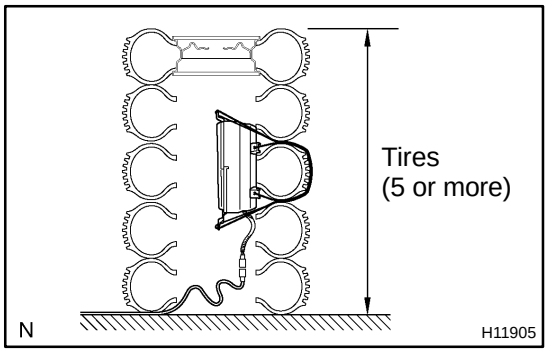

(d) Place the tires.
(1) Place at least 2 tires under the tire to which the front passenger airbag assembly is tied.
(2) Place at least 2 tires over the tire to which the front passenger airbag assembly is tied. The top tire should have the wheel installed.

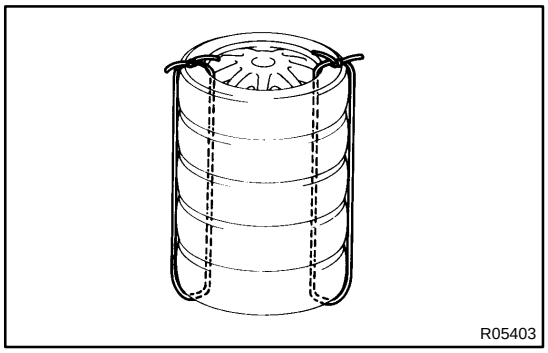

(3) Tie the tires together with 2 wire harness.

CAUTION:
Make sure that the wire harness is tight. It is very dangerous if loose wire harnesses result in the tires coming free due to the shock from the airbag deploying.

HINT:
Place the SST connector and wire harness inside tires. Provide at least 1 m (3 ft) of slack for the wire harness.

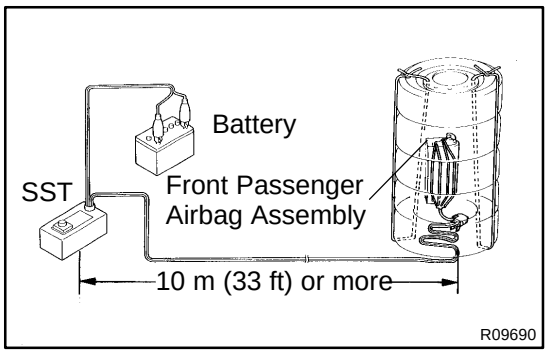

(e) Install the SST.
Connect the connectors of the 2 SST to the front passenger airbag assembly connector.
SST 09082-00700, 09082-00760

NOTICE:
To avoid damaging the SST connector and wire harness, do not lock the secondary lock of the twin lock. Also, secure some slack for the SST wire harness inside the tires.

(f) Deploy the airbag.
(1) Connect the SST red clip to the battery positive (+) terminal and the black clip to the battery negative (-) terminal.
(2) Check that no one is within 10 m (33 ft) area around the tire which the front passenger airbag assembly is tied to.
(3) Press the SST activation switch and deploy the airbag.

HINT:
The airbag deploys simultaneously as the LED of the SST activation switch lights up.

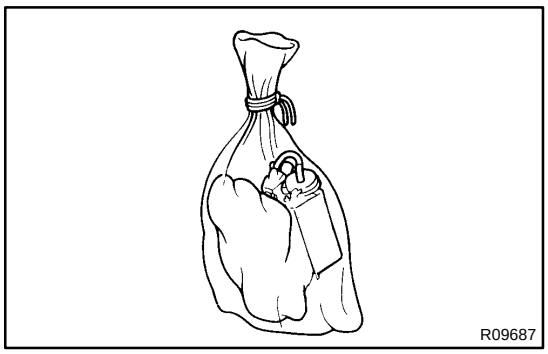

(g) Dispose of the front passenger airbag assembly.

CAUTION:

- **The front passenger airbag assembly is very hot when the airbag is deployed, so leave it alone for at least 30 minutes after deployment.**
- **Use gloves and safety glasses when handling a front passenger airbag assembly with the deployed airbag.**
- **Always wash your hands with water after completing the operation.**
- **Do not apply water, etc. to a front passenger airbag assembly with the deployed airbag.**

(1) Remove the front passenger airbag assembly from the tire.

(2) Place the front passenger airbag assembly in a vinyl bag, tie the end tightly and dispose of it in the same way as other general parts disposal.

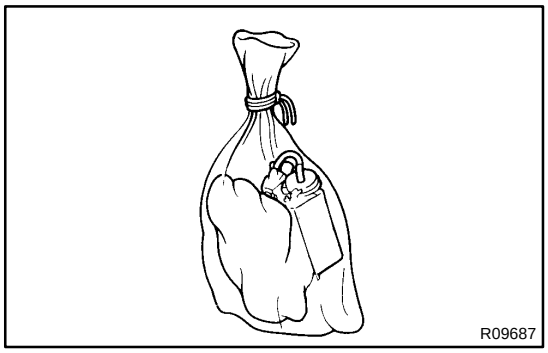

3. DEPLOYMENT WHEN DISPOSING OF FRONT PASSENGER AIRBAG ASSEMBLY WITH AIRBAG DEPLOYED IN COLLISION

Dispose of the front passenger airbag assembly.

CAUTION:

- **The front passenger airbag assembly is very hot when the airbag is deployed, so leave it alone for at least 30 minutes after deployment.**
- **Use gloves and safety glasses when handling a front passenger airbag assembly with the deployed airbag.**
- **Always wash your hands with water after completing the operation.**
- **Do not apply water, etc. to a front passenger airbag assembly with the deployed airbag.**

(1) Remove the front passenger airbag assembly from the instrument panel (See page RS-28).

(2) Place the front passenger airbag assembly in a vinyl bag, tie the end tightly and dispose of it in the same way so as other general parts disposal.

RS05Z-08

INSPECTION

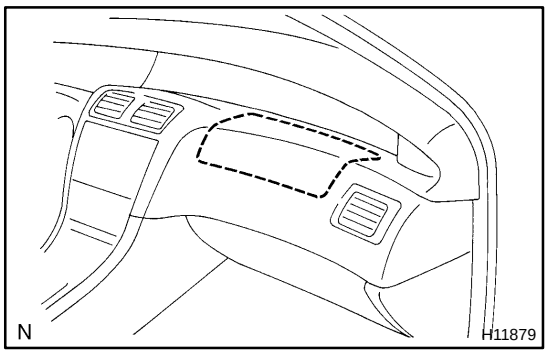

1. Vehicles not involved in collision:

INSPECT SUPPLEMENTAL RESTRAINT SYSTEM

(a) Do a diagnostic system check (See page DI-349).

(b) Do a visual check which includes the following item with the front passenger airbag assembly installed in the vehicle.

Check cuts, minute cracks or marked discoloration on the front passenger airbag assembly, No. 1 safety pad and instrument panel.

2. Vehicle involved in a collision and airbag is not deployed:

INSPECT SUPPLEMENTAL RESTRAINT SYSTEM

(a) Do a diagnostic system check (See page DI-349).

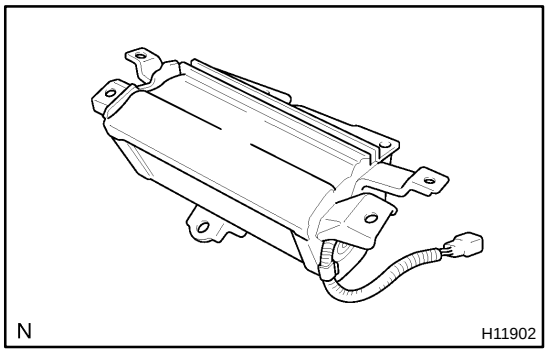

(b) Do a visual check which includes the following items with the front passenger airbag assembly removed from the vehicle.

- Check cuts, minute cracks or marked discoloration on the front passenger airbag assembly.
- Check cuts and cracks in wire harness, and for chipping in connectors.

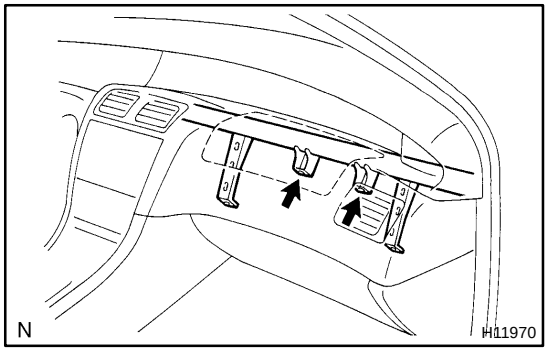

- Check the deformation or cracks on the No. 1 safety pad, instrument panel, instrument panel reinforcement.

HINT:

If the No. 1 safety pad, instrument panel or instrument panel reinforcement is deformed or cracked, never repair it. Always replace it with a new one.

CAUTION:

For removal and installation of the front passenger airbag assembly, see page RS-28 and RS-39 , and be sure to follow the correct procedure.

3. Vehicle involved in a collision and airbag is deployed: INSPECT SUPPLEMENTAL RESTRAINT SYSTEM

(a) Do a diagnostic system check (See page DI-349).

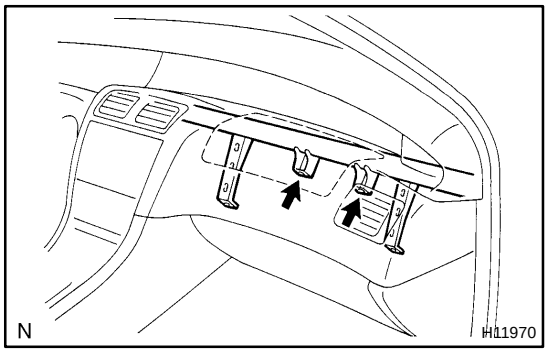

(b) Do a visual check which includes the following items with the front passenger airbag assembly removed from the vehicle.

- Check the deformation or cracks on the instrument panel reinforcement.
- Check the damage on the connector and wire harness.

HINT:

If the instrument panel reinforcement is deformed or cracked, never repair it. Always replace it with a new one.

CAUTION:

For removal and installation of the front passenger airbag assembly, see page RS-28 and RS-39 , and be sure to follow the correct procedure.

RS0L8-01

INSTALLATION

NOTICE:

Never use airbag parts from another vehicle. When replacing parts, replace them with new parts.

1. INSTALL NO. 1 SAFETY PAD

(a) Install the No. 3 resister with the 2 screws.

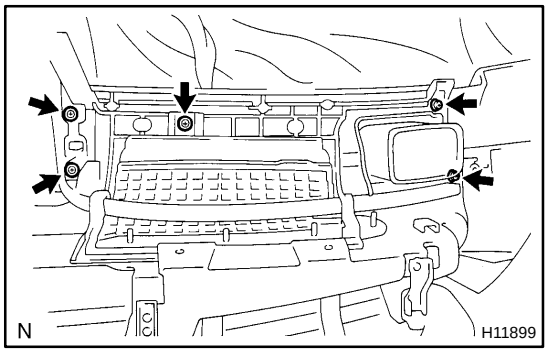

(b) Install the No. 1 safety pad with the 5 screws.

(c) Install the wire harness to the No. 1 safety pad.

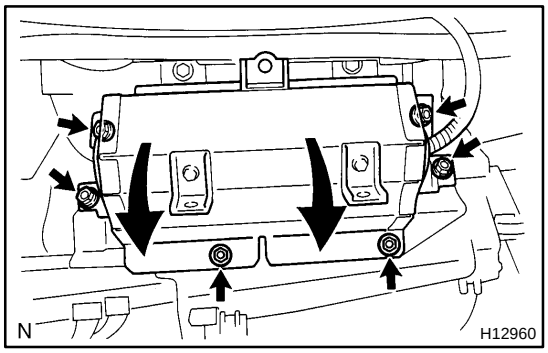

2. INSTALL FRONT PASSENGER AIRBAG ASSEMBLY

(a) Install the front passenger airbag assembly with the 6 nuts.

CAUTION:

- **When installing the front passenger airbag assembly, take care that the wiring does not interfere with other parts and is not pinched between other parts.**
- **Make sure that no foreign objects are trapped between the airbag bag and within the module.**

NOTICE:

If the front passenger airbag assembly has been dropped, or there are cracks, dents or other defects in the case or connector, replace the front passenger airbag assembly with a new one.

(b) Install the center bracket with the 3 screws.

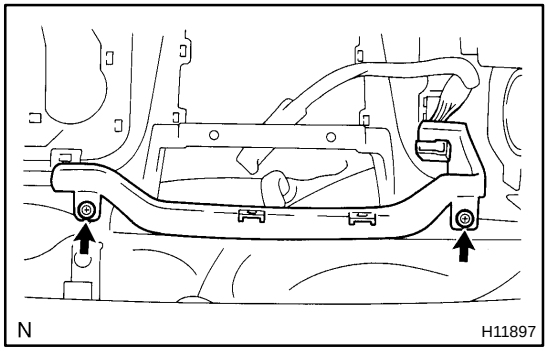

(c) Install part of the instrument panel wire harness with the 2 screws.

(d) Install the No. 4 heater to resister duct with the 2 screws.

(e) Install the No. 5 heater to resister duct with the screw.

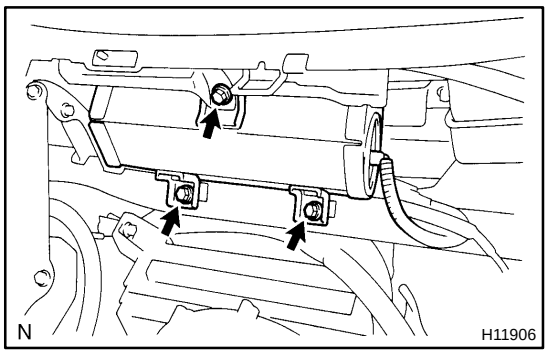

3. INSTALL INSTRUMENT PANEL (See page BO-97)

(a) Install the bolt for connecting the front passenger airbag assembly to the center bracket.
Torque: 20 N·m (205 kgf·cm, 15 ft·lbf)

(b) Install the 2 bolts for mounting the front passenger airbag assembly to the instrument panel reinforcement.
Torque: 20 N·m (205 kgf·cm, 15 ft·lbf)

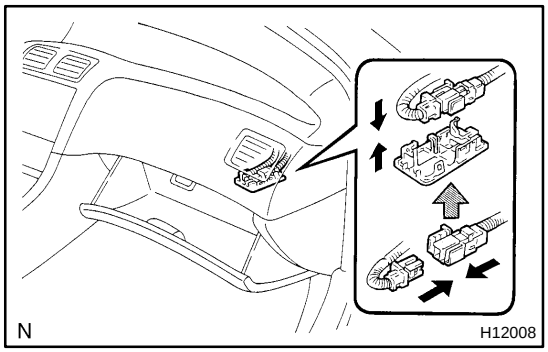

4. CONNECT AIRBAG CONNECTOR

(a) Connect the airbag connector.

(b) Set the connector on the glove compartment door finish plate.

(c) Install the glove compartment door finish plate to the lower panel.

RS0L6-01

REMOVAL

NOTICE:

- **If the wiring connector of the SRS is disconnected and the ignition switch is in ON or ACC position, DTCs will be recorded.**
- **Never use the airbag parts from another vehicle. When replacing parts, replace them with new parts.**

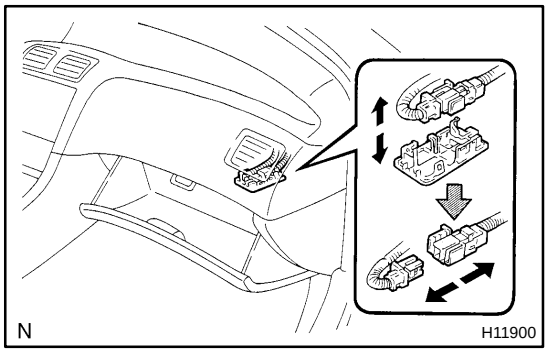

1. DISCONNECT AIRBAG CONNECTOR

(a) Using a screwdriver, pry out the glove compartment door finish plate inside the lower panel.

HINT:

Tape the screwdriver tip before use.

(b) Remove the connector from the glove compartment door finish plate.

NOTICE:

When handling the airbag connector, take care not to damage the airbag wire harness.

(c) Disconnect the airbag connector.

2. REMOVE INSTRUMENT PANEL (See page BO-90)

3. REMOVE FRONT PASSENGER AIRBAG ASSEMBLY

(a) Remove the screw and No. 5 heater to resister duct.

(b) Remove the 2 screws and No. 4 heater to resister duct.

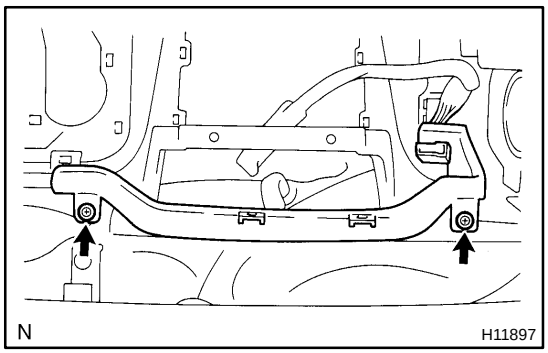

(c) Remove the 2 screws and part of instrument panel wire harness, as shown in the illustration.

(d) Remove the 2 screws and center bracket.

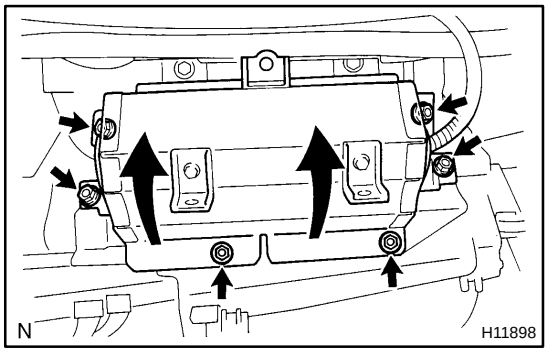

(e) Remove the 6 nuts and front passenger airbag assembly, as shown in the illustration.

CAUTION:

- **Do not store the front passenger airbag assembly with the airbag deployment side facing downward.**
- **Never disassemble the front passenger airbag assembly.**

4. REMOVE NO. 1 SAFETY PAD

(a) Separate the wire harness from the No. 1 safety pad.

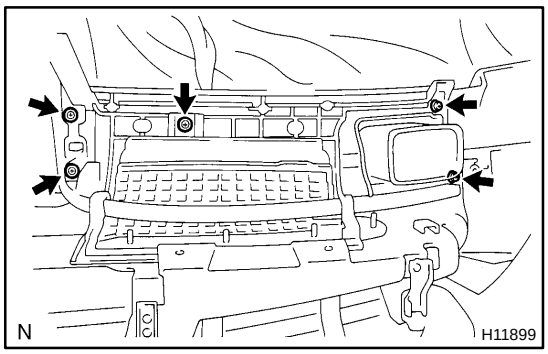

(b) Remove the 5 screws and No. 1 safety pad.
(c) Remove the 2 screws and No. 3 resister.

RS018-24

REPLACEMENT

REPLACEMENT REQUIREMENTS

In the following cases, replace the front passenger airbag assembly, No. 1 safety pad, instrument panel or instrument panel reinforcement.

Case	Replacing part
If the airbag has been deployed.	Front passenger airbag assembly
If the front passenger airbag assembly has been found to be faulty in trouble-shooting.	Front passenger airbag assembly
If the front passenger airbag assembly has been found to be faulty during checking items (See page RS-30).	Front passenger airbag assembly
If the instrument panel has been found to be faulty during checking items (See page RS-30).	Instrument panel
If the No. 1 safety pad has been found to be faulty during checking items (See page RS-30).	No. 1 safety pad
If the instrument panel reinforcement has been found to be faulty during checking items (See page RS-30).	Instrument panel reinforcement
If the front passenger airbag assembly has been dropped.	Front passenger airbag assembly

CAUTION:

For replacement of the front passenger airbag assembly, see page RS-28 and RS-39 . Be sure to follow the correct procedure.

SIDE AIRBAG ASSEMBLY (Manual Adjuster Type)

RS0LF-01

COMPONENTS

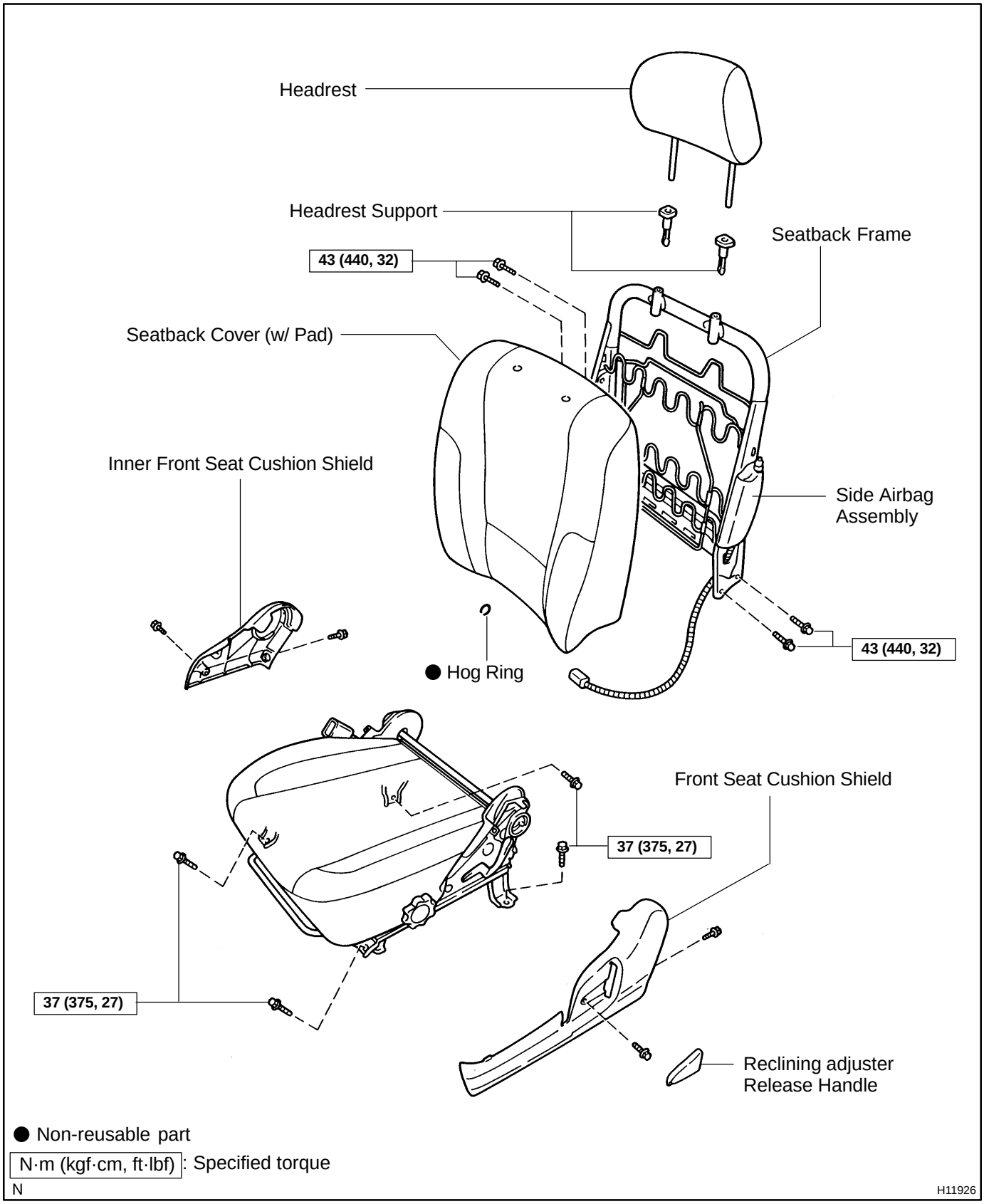

RS0LI-01

DISPOSAL

See page RS-45 .

RS0LH-01

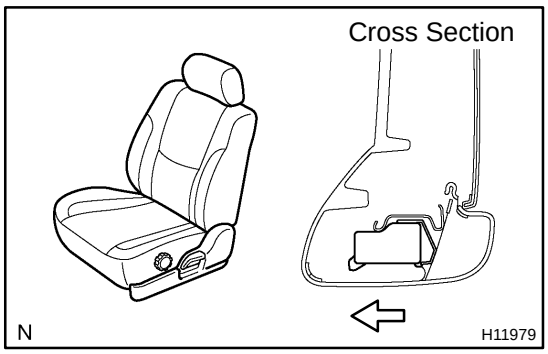

INSPECTION

1. Vehicles not involved in collision:
INSPECT SUPPLEMENTAL RESTRAINT SYSTEM

(a) Do a diagnostic system check (See page DI-349).

(b) Do a visual check which includes the following item with the seatback assembly installed in the vehicle.
Check that there are no cuts or frayed in seams and outside of seatback cover.

2. Vehicle involved in a collision and airbag is not deployed:
INSPECT SUPPLEMENTAL RESTRAINT SYSTEM

(a) Do a diagnostic system check (See page DI-349).

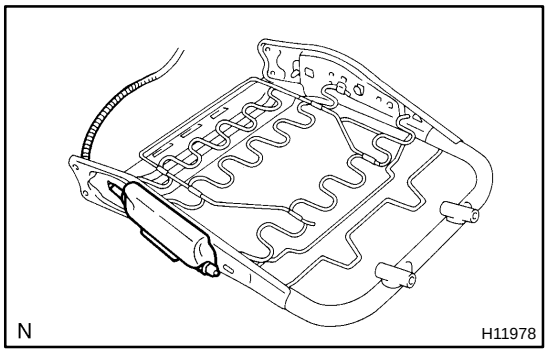

(b) Do a visual check which includes the following items with the seatback assembly removed from the vehicle.
- Check cuts, tears and cracks of the side airbag assembly.
- Check cuts and cracks in wire harness, and chipping in connectors.

CAUTION:
For removal and installation of the seatback assembly, see page RS-56 and RS-60 . Be sure to follow the correct procedure.

3. Vehicle involved in a collision and airbag is deployed:
INSPECT SUPPLEMENTAL RESTRAINT SYSTEM

(a) Do a diagnostic system check (See page DI-349).

(b) Do a visual check which includes the following items with the seatback assembly removed from the vehicle.
- Check the seatback installation part of the seat adjuster.
- Check the damage to the connector and wire harness.

HINT:
If the seat adjuster is deformed, never repair it. Always replace it with new one.

RS0LK-01

INSTALLATION

NOTICE:

Never use airbag parts from another vehicle. When replacing parts, replace them with new parts.

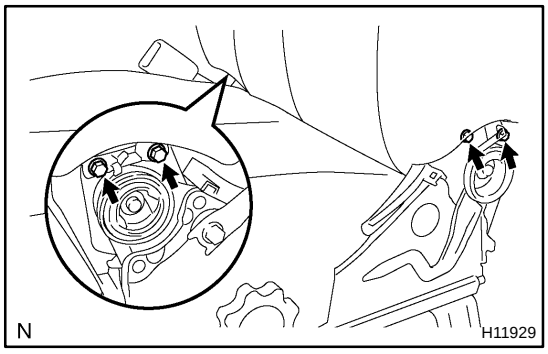

1. INSTALL SEATBACK ASSEMBLY

(a) Install the 4 bolts.

Torque: 43 N·m (440 kgf·cm, 32 ft·lbf)

NOTICE:

- **Make sure that the seatback assembly is installed with the specified torque.**
- **If the seatback assembly has been dropped, or there are cracks, dents or other defects in the case or connector, replace the seatback assembly with a new one.**
- **When installing the seatback assembly, take care it is not pinched between other parts.**

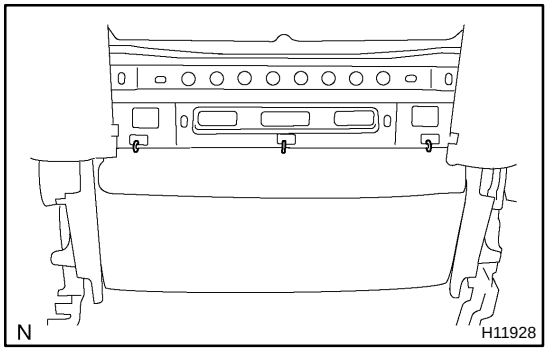

(b) Install 3 new hog rings as shown in the illustration.

HINT:

When installing the hog rings, take care to prevent wrinkles as little as possible.

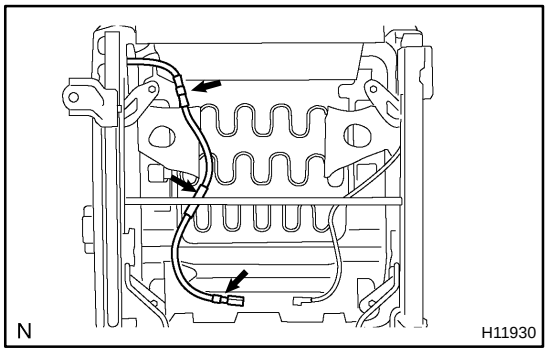

(c) Install the wire harness of the side airbag assembly to the seat cushion assembly.

2. INSTALL INNER FRONT SEAT CUSHION SHIELD

Install the inner front seat cushion shield with the 2 screws.

3. INSTALL FRONT SEAT CUSHION SHIELD

Install the front seat cushion shield with the 2 screws.

4. INSTALL RECLINING ADJUSTER KNOBS

5. INSTALL HEADREST

6. INSTALL FRONT SEAT

NOTICE:

When mounting the seat to the vehicle, take care not to damage the airbag wire harness.

(a) Connect the side airbag connector.

(b) Slide the front seat to the most front position.

NOTICE:

Make sure that seat adjuster locks.

(c) Without holding the seat track handle, mount the seat to the vehicle.

HINT:

If holding the seat track handle, the adjusted rearmost position slip off.

(d) Tighten the bolts on the front side temporarily, from the bolt on the inner side tighten them completely.
Torque: 37 N·m (375 kgf·cm, 27 ft·lbf)

(e) Slide the seat to the most front position to install the bolts on the rear side.
Torque: 37 N·m (375 kgf·cm, 27 ft·lbf)

RS0LG-01

REMOVAL

NOTICE:

- **If the wiring connector of the SRS is disconnected and the ignition switch is at ON or ACC position, DTCs will be recorded.**
- **Never use the airbag parts from another vehicle. When replacing parts, replace them with new parts.**

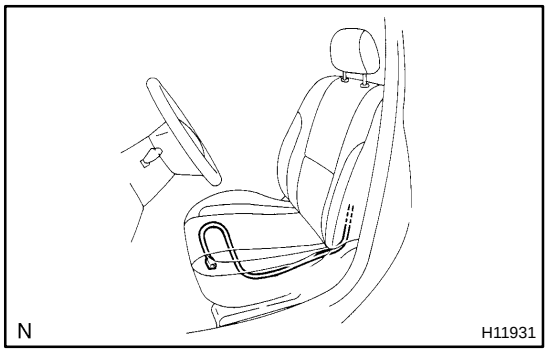

1. REMOVE FRONT SEAT

(a) Remove the 4 seat track covers and 4 bolts.

(b) Disconnect the side airbag connector.

NOTICE:

When handling the airbag connector, take care not to damage the airbag wire harness.

(c) Remove the front seat.

2. REMOVE HEADREST

3. REMOVE RECLINING ADJUSTER KNOB

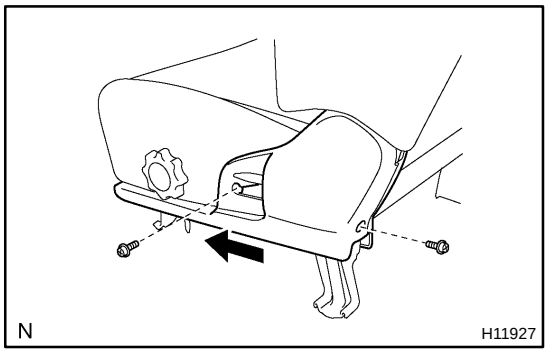

4. REMOVE FRONT SEAT CUSHION SHIELD

Remove the 2 screws and front seat cushion shield.

5. REMOVE INNER FRONT SEAT CUSHION SHIELD

Remove the 2 scerws and front seat cushion inner shield.

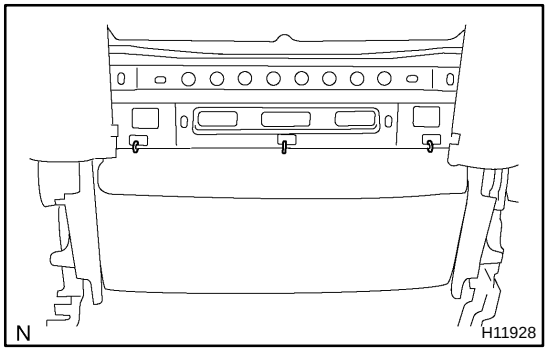

6. REMOVE SEATBACK ASSEMBLY

(a) Remove the hog rings.

(b) Remove the wire harness of the side airbag assembly.

NOTICE:

When handling the airbag wire harness, take care not to damage the airbag wire harness.

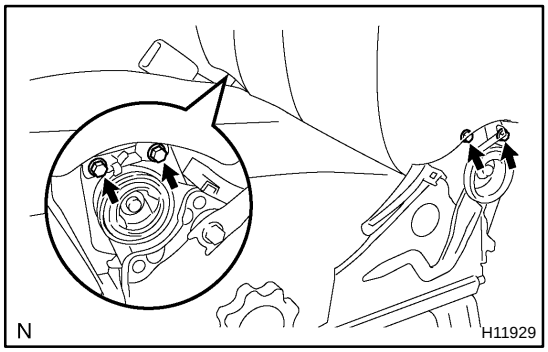

(c) Remove the 4 bolts and seatback assembly.

RS0LJ-01

REPLACEMENT

REPLACEMENT REQUIREMENTS

In the following cases, replace the seatback assembly or seatback cover.

Case	Replacing part
If the side airbag has been deployed.	Seatback assembly
If the side airbag assembly has been found to be faulty in troubleshooting.	Seatback assembly
If the side airbag assembly has cuts during checking items (See page RS-57).	Seatback assembly
If the seatback cover has cuts and frayed seams during checking items (See page RS-57).	Seatback cover
If the side airbag assembly has been found to be faulty during checking items (See page RS-57).	Seatback assembly
If the seatback cover has been found to be faulty during checking items (See page RS-57).	Seatback cover
If the seatback assembly has been dropped.	Seatback assembly

CAUTION:

For removal and installation of the seatback assembly, see page RS-56 and RS-60 . Be sure to follow the correct procedure.

SIDE AIRBAG ASSEMBLY (Power Adjuster Type)

RS0L9-01

COMPONENTS

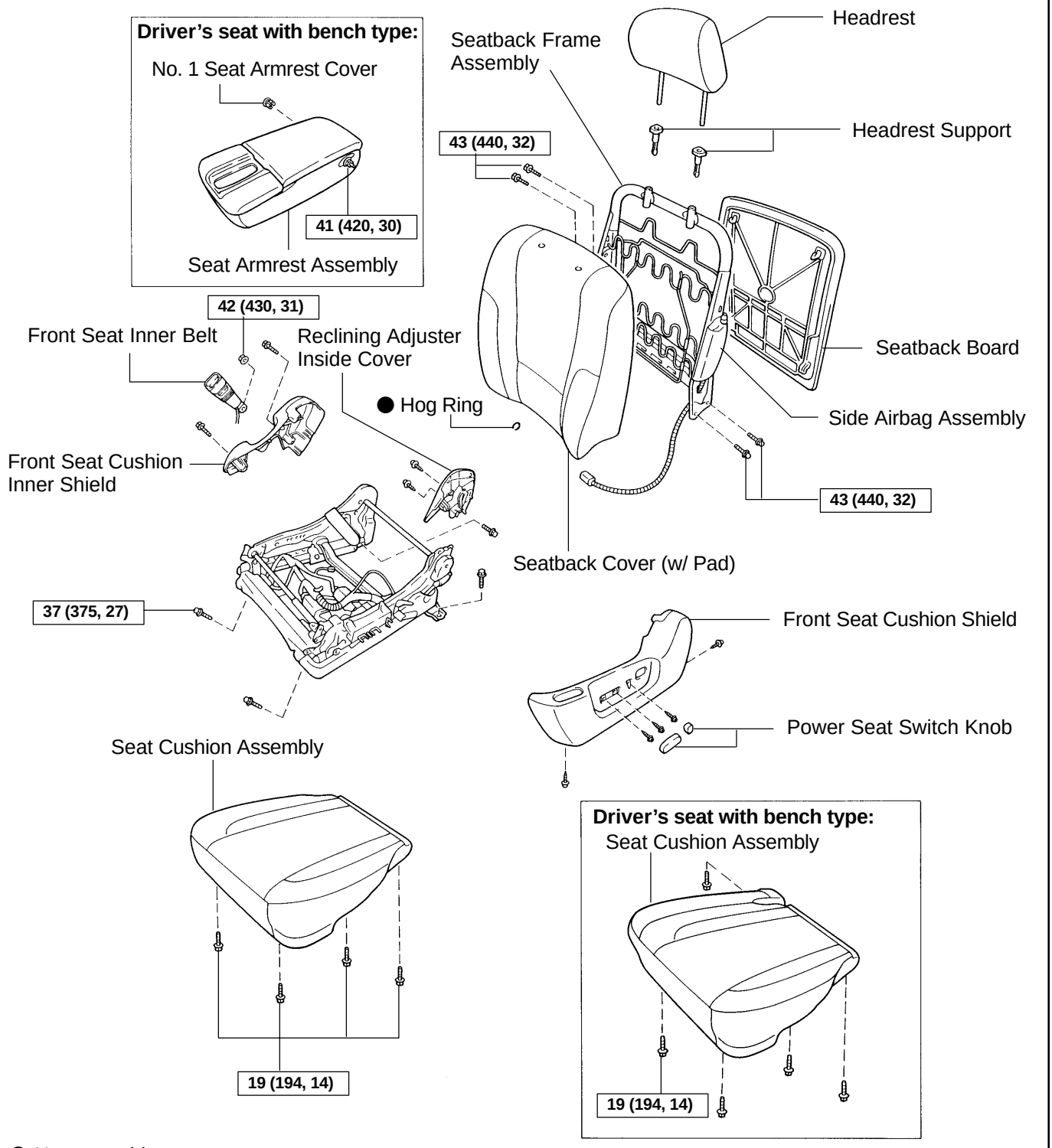

● Non-reusable part

N·m (kgf·cm, ft·lbf): Specified torque

N

H11925

RS0LC-01

DISPOSAL

HINT:

When scrapping vehicles equipped with an SRS or disposing of the side airbag assembly always first deploy the airbag in accordance with the procedure described below. If any abnormality occurs with the airbag deployment, contact the SERVICE DEPT. of TOYOTA MOTOR SALES, U.S.A., INC.

CAUTION:

- **Never dispose of a side airbag assembly which has an undeployed airbag.**
- **The airbag produces a sizeable exploding sound when it deploys, so perform the operation out-of-doors and where it will not create a nuisance to nearby residents.**

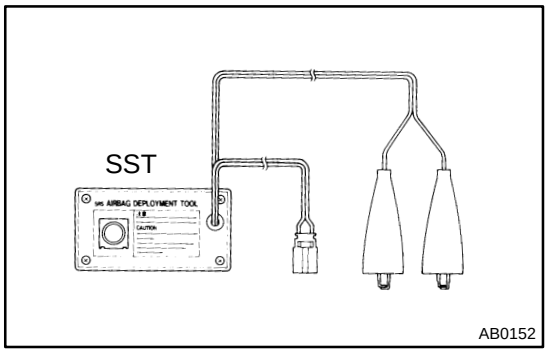

- **When deploying the airbag, always use the specified SST (SRS Airbag Deployment Tool), perform the operation in a place away from electrical noise.**
  SST 09082-00700
- **When deploying an airbag, perform the operation at least 10 m (33 ft) away from the airbag assembly.**
- **The side airbag assembly is very hot when the airbag is deployed, so leave it alone for at least 30 minutes after deployment.**
- **Use gloves and safety glasses when handling side airbag assembly with the deployed airbag.**
- **Always wash your hands with water after completing the operation.**
- **Do not apply water, etc. to a side airbag assembly with the deployed airbag.**

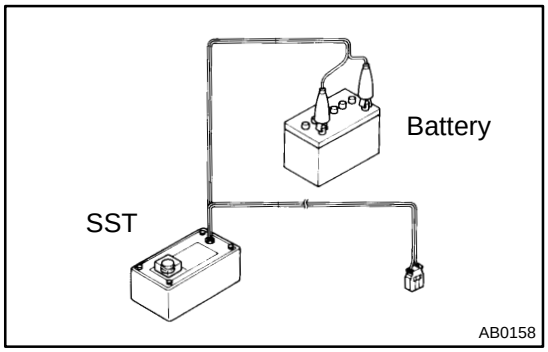

1. AIRBAG DEPLOYMENT WHEN SCRAPPING VEHICLE

HINT:

Have a battery ready as the power source to deploy the airbag.

(a) Check functioning of the SST (See step 1-(a) on page RS-17).
SST 09082-00700

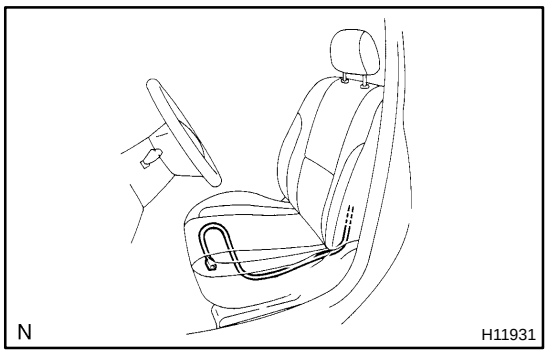

(b) Disconnect the side airbag connector.

NOTICE:

When handling the airbag connector, take care not to damage the airbag wire harness.

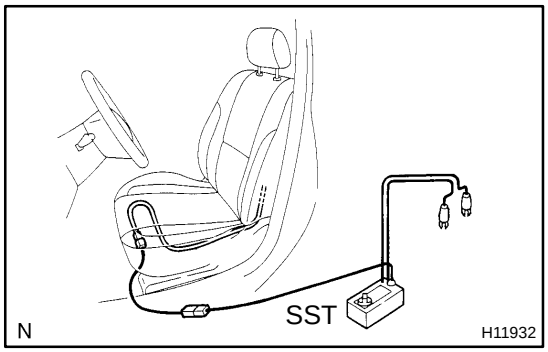

(c) Install the SST.

(1) Connect the connectors of the 2 SST to the airbag connector.

SST 09082-00700, 09082-00750

NOTICE:

To avoid damaging the SST connector and wire harness, do not lock the secondary lock of the twin lock.

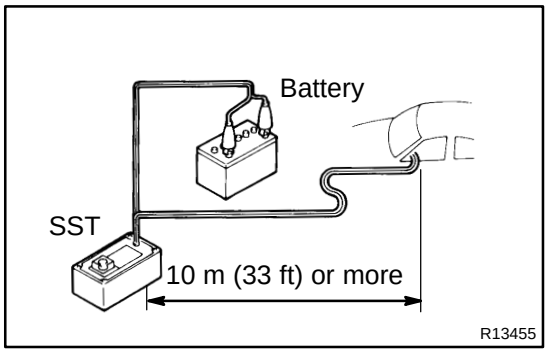

(2) Move the SST at least 10 m (33 ft) away from the front of the vehicle.

(3) Close all the doors and windows of the vehicle.

NOTICE:

Take care not to damage the SST wire harness.

(4) Connect the SST red clip to the battery positive (+) terminal and the black clip to the battery negative (-) terminal.

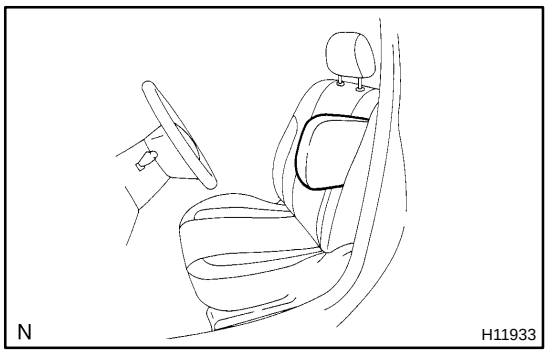

(d) Deploy the airbag.

(1) Check that no one is inside the vehicle or within 10 m (33 ft) area around the vehicle.

(2) Press the SST activation switch and deploy the airbag.

CAUTION:

- **The side airbag assembly is very hot when the airbag is deployed, so leave it alone for at least 30 minutes after deployment.**
- **Use gloves and safety glasses when handling the side airbag assembly with the deployed airbag.**
- **Do not apply water, etc. to the side airbag assembly with the deployed airbag.**
- **Always wash your hands with water after completing the operation.**
- **When scrapping a vehicle, deploy the airbag and scrap the vehicle with the side airbag assembly still installed.**

HINT:

The airbag deploys simultaneously as the LED of SST activation switch lights up.

2. DEPLOYMENT WHEN DISPOSING OF SIDE AIRBAG ASSEMBLY

NOTICE:

- **When disposing of the side airbag assembly only, never use the customer's vehicle to deploy the airbag.**
- **Be sure to follow the procedure given below when deploying the airbag.**

HINT:

Have a battery ready as the power source to deploy the airbag.

(a) Remove the seatback assembly (See page RS-42).

(b) Remove the side airbag assembly from the seatback assembly.

(1) Remove the hog rings.

(2) Release the seatback cover hook from the seatback frame.

(3) Remove the 2 bolts and side airbag assembly.

CAUTION:

When storing the side airbag assembly, keep the upper surface of the airbag deployment side facing upward.

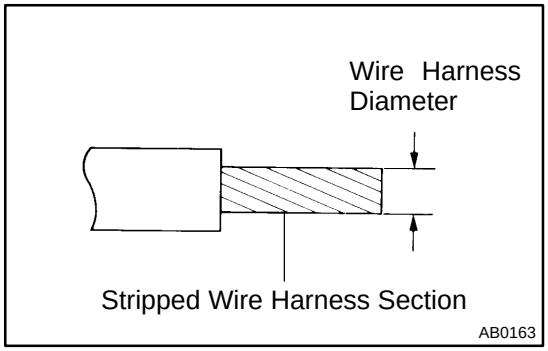

(c) Using a service-purpose wire harness, tie down the side airbag assembly to the tire.

Wire harness: Stripped wire harness section 1.25 mm^2 or more (0.0019 in^2. or more)

CAUTION:

If a wire harness which is too thin or some other thing is used to tie down the side airbag assembly, it may be snapped by the shock when the airbag is deployed. This is highly dangerous. Always use a wire harness for vehicle use which is at least 1.25 mm^2 (0.0019 in^2.).

HINT:

To calculate the square of the stripped wire harness section-

Square = 3.14 x $(Diameter)^2$ divided by 4

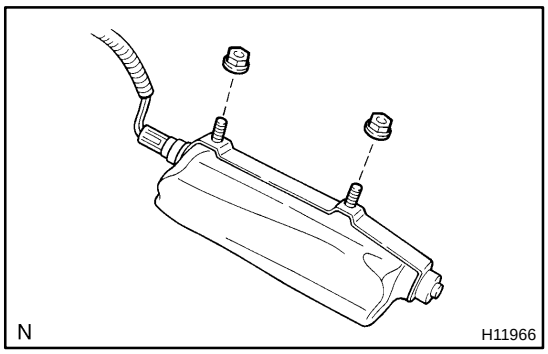

(1) Install the 2 nuts to the side airbag assembly.

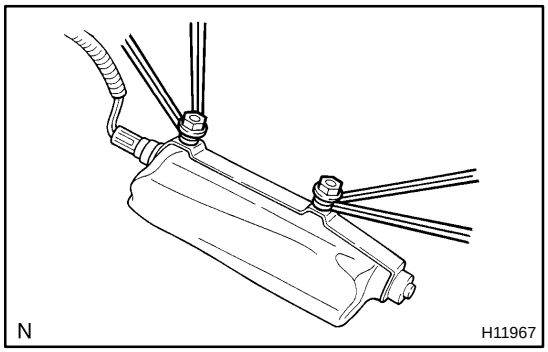

(2) Wind the wire harness around the stud bolts of the side airbag assembly as shown in the illustration.

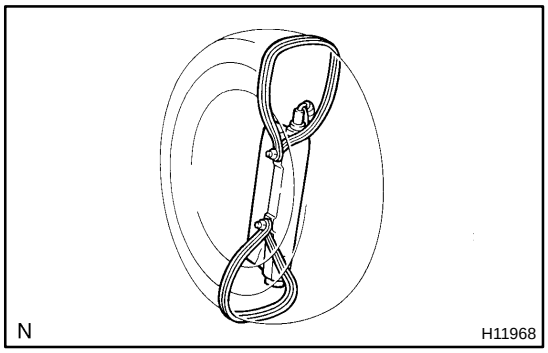

(3) Position the side airbag assembly inside the tire with the airbag deployment direction facing inside.

Tire size: Must exceed the following dimensions-
Width: 185 mm (7.28 in.)
Inner diameter: 360 mm (14.17 in.)

CAUTION:

- **Make sure the wire harness is tight. It is very dangerous when a loose wire harness results in the side airbag assembly coming free due to the shock from the airbag deploying.**
- **Always tie down the side airbag assembly with the airbag deployment side facing inside.**

NOTICE:

The tire will be marked by the airbag deployment, so when disposing of the airbag use a redundant tire.

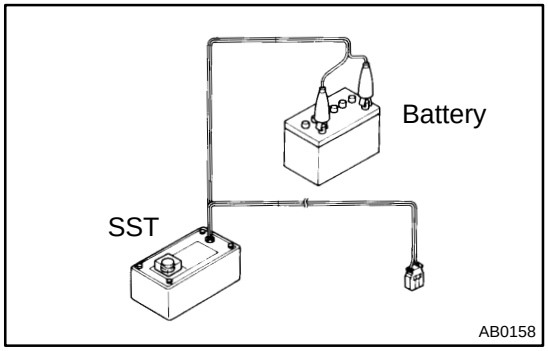

(d) Check functioning of the SST (See step 1-(a) on page RS-17).
SST 09082-00700

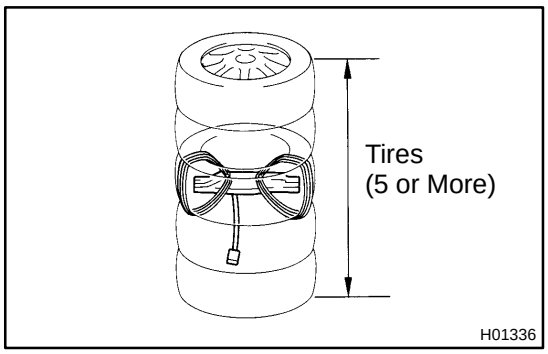

(e) Place the tires.
(1) Place at least 2 tires under the tire to which the side airbag assembly is tied.
(2) Place at least 2 tires over the tire to which the side airbag assembly is tied. The top tire should have the wheel installed.

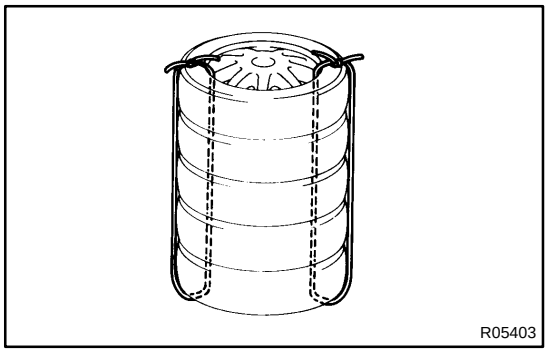

(3) Tie the tires together with 2 wire harness.

CAUTION:

Make sure that the wire harness are tight. It is very dangerous when loose wire harness results in the tires coming free due to the shock from the airbag deploying.

HINT:

Place the SST connector and wire harness inside tires. Secure at least 1 m (3 ft) of slack for the wire harness.

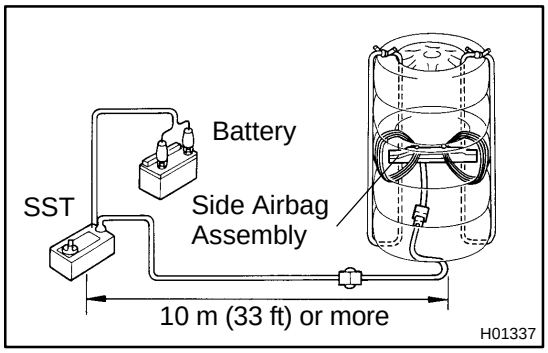

(f) Install the SST.
Connect the connectors of the 2 SST to the side airbag assembly connector.
SST 09082-00700, 09082-00750

NOTICE:

To avoid damaging the SST connector and wire harness, do not lock the secondary lock of the twin lock. Also, secure some slack for the SST wire harness inside the tire.

(g) Deploy the airbag.
(1) Connect the SST red clip to the battery positive (+) terminal and the black clip to the battery negative (-) terminal.
(2) Check that no one is within 10 m (33 ft) area around the tire which the side airbag assembly is tied to.
(3) Press the SST activation switch and deploy the airbag.

HINT:

The airbag deploys simultaneously as the LED of the SST activation switch lights up.

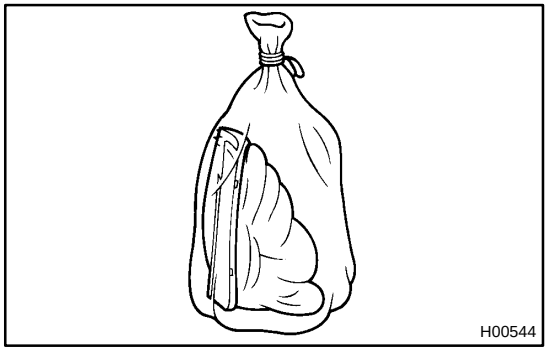

(h) Dispose of the side airbag assembly.

CAUTION:

- **The side airbag assembly is very hot when the airbag is deployed, so leave it alone for at least 30 minutes after deployment.**
- **Use gloves and safety glasses when handling a side airbag assembly with the deployed airbag.**
- **Do not apply water etc. to a side airbag assembly with the deployed airbag.**

- **Always wash your hands with water after completing the operation.**
  (1) Remove the side airbag assembly from the tire.
  (2) Place the side airbag assembly in a vinyl bag, tie the end tightly and dispose of it in the same way as other general parts disposal.

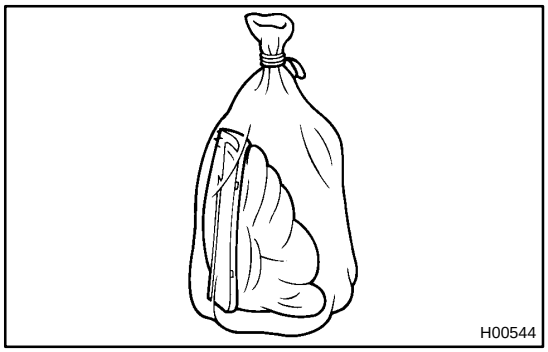

3. DEPLOYMENT WHEN DISPOSING OF SIDE AIRBAG ASSEMBLY WITH AIRBAG DEPLOYED IN COLLISION

Dispose of the side airbag assembly.

CAUTION:

- **The side airbag assembly is very hot when the airbag is deployed, so leave it alone for at least 30 minutes after deployment.**
- **Use gloves and safety glasses when handling a side airbag assembly with the deployed airbag.**
- **Do not apply water etc. to a side airbag assembly with the deployed airbag.**
- **Always wash your hands with water after completing the operation.**
  (1) Remove the side airbag assembly from the seat (See page RS-42 and see step 2. on page RS-45).
  (2) Place the side airbag assembly in a vinyl bag, tie the end tightly and dispose of it in the same way as other general parts disposal.

RS0LB-01

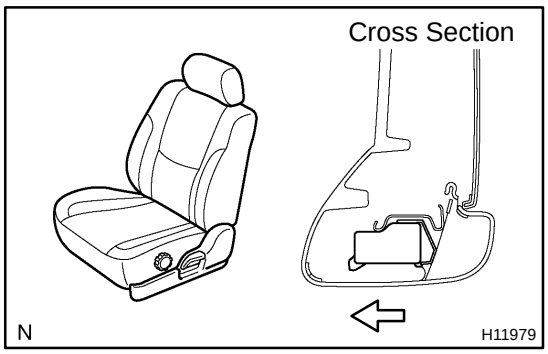

INSPECTION

1. Vehicles not involved in collision:
INSPECT SUPPLEMENTAL RESTRAINT SYSTEM

(a) Do a diagnostic system check (See page DI-349).

(b) Do a visual check which includes the following item with the seatback assembly installed in the vehicle.
Check that there are no cuts or frayed in seams and outside of seatback cover.

2. Vehicle involved in a collision and airbag is not deployed:
INSPECT SUPPLEMENTAL RESTRAINT SYSTEM

(a) Do a diagnostic system check (See page DI-349).

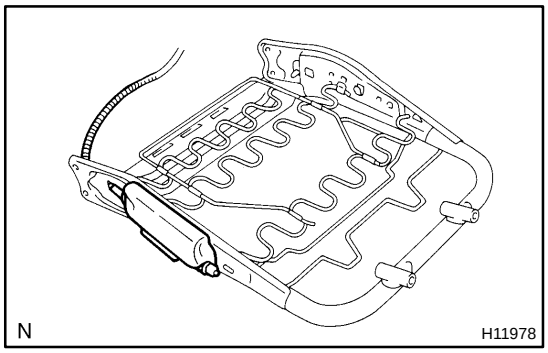

(b) Do a visual check which includes the following items with the seatback assembly removed from the vehicle.
- Check cuts, tears and cracks of the side airbag assembly.
- Check cuts and cracks in wire harness, and chipping in connectors.

CAUTION:
For removal and installation of the seatback assembly, see page RS-42 and RS-52 . Be sure to follow the correct procedure.

3. Vehicle involved in a collision and airbag is deployed:
INSPECT SUPPLEMENTAL RESTRAINT SYSTEM

(a) Do a diagnostic system check (See page DI-349).

(b) Do a visual check which includes the following items with the seatback assembly removed from the vehicle.
- Check the seatback installation part of the seat adjuster.
- Check the damage to the connector and wire harness.

HINT:
If the seat adjuster is deformed, never repair it. Always replace it with new one.

RS0LE-01

INSTALLATION

NOTICE:

Never use airbag parts from another vehicle. When replacing parts, replace them with new parts.

1. INSTALL SEATBACK ASSEMBLY

(a) Temporarily install the seatback assembly.

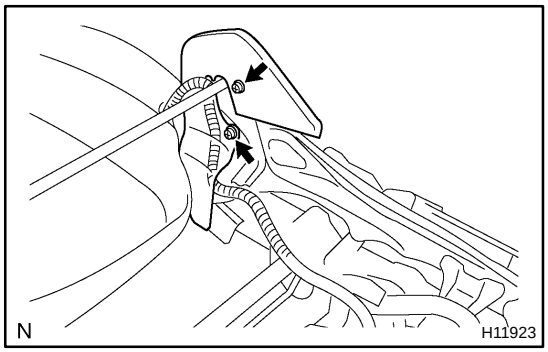

(b) Install the wire harness to the reclining adjuster inside cover and install the cover to the seat adjuster with the 2 screws.

HINT:

Do the same for LH and RH.

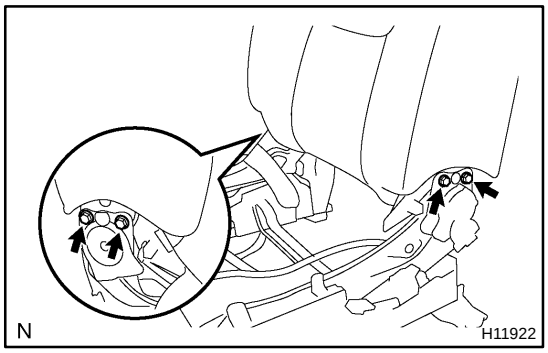

(c) Install the 4 bolts.

Torque: 43 N·m (440 kgf·cm, 32 ft·lbf)

NOTICE:

- **Make sure that the seatback assembly is installed with the specified torque.**
- **If the seatback assembly has been dropped, or there are cracks, dents or other defects in the case or connector, replace the seatback assembly with a new one.**
- **When installing the seatback assembly, take care it is not pinched between other parts.**

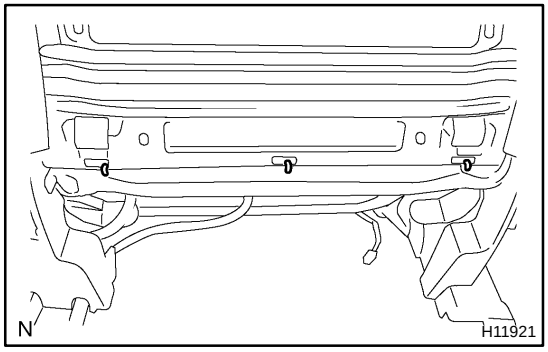

(d) Install the new hog rings as shown in the illustration.

2. INSTALL SEATBACK BOARD

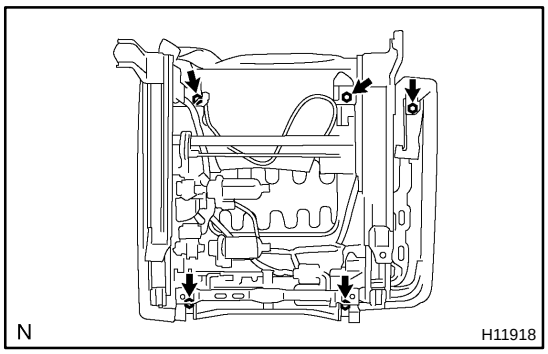

3. INSTALL SEAT CUSHION ASSEMBLY

(a) Driver's seat with bench type:
Install the seat cushion assembly with the 5 bolts.

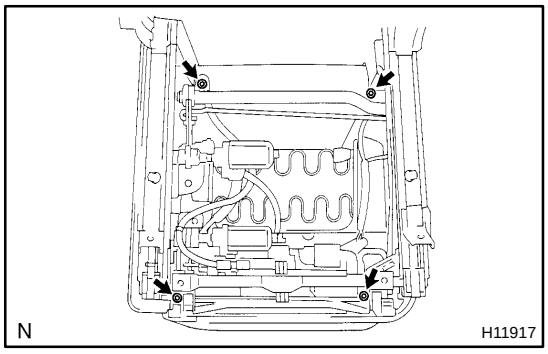

(b) Except driver's seat with bench type:
Install the seat cushion assembly with 4 bolts.

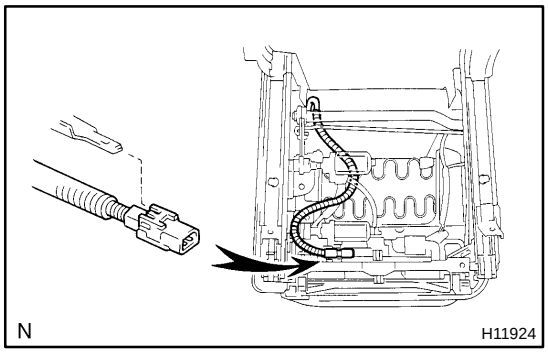

(c) Install the wire harness to the seat cushion assembly.

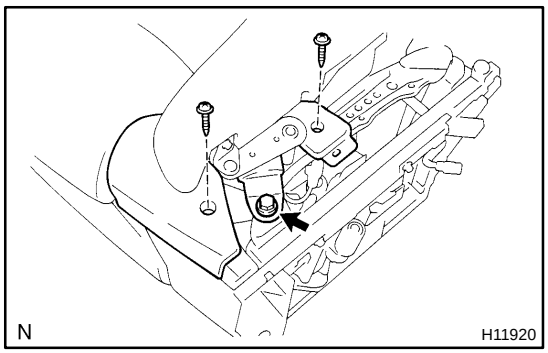

4. INSTALL FRONT SEAT CUSHION INNER SHIELD

Install the front seat inner shield with the 2 screws.

5. INSTALL FRONT SEAT INNER BELT

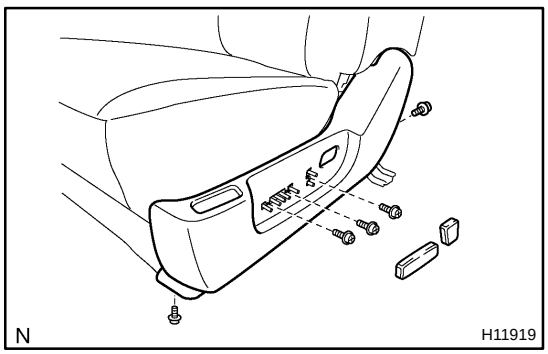

6. INSTALL FRONT SEAT CUSHION SHIELD

Install the front seat cushion shield with the 5 screws.

7. INSTALL POWER SEAT SWITCH KNOBS

8. Driver's seat with bench type:
INSTALL SEAT ARMREST ASSEMBLY

Install the seat armrest assembly with bolt and cover.

9. INSTALL HEADREST

10. INSTALL FRONT SEAT

NOTICE:

When mounting the seat to the vehicle, take care not to damage the airbag wire harness.

(a) Connect the side airbag connector and power seat connector.

(b) Slide the front seat to the most front position.

NOTICE:

Make sure that seat adjuster locks.

(c) Without holding the seat track handle, mount the seat to the vehicle.

HINT:

If holding the seat track handle, the adjusted rearmost position slip off.

(d) Tighten the bolts on the front side temporarily, from the bolt on the inner side tighten them completely.
Torque: 37 N·m (375 kgf·cm, 27 ft·lbf)

(e) Slide the seat to the most front position to install the bolts on the rear side.
Torque: 37 N·m (375 kgf·cm, 27 ft·lbf)

RS0LA-01

REMOVAL

NOTICE:

- **If the wiring connector of the SRS is disconnected and the ignition switch is at ON or ACC position, DTCs will be recorded.**
- **Never use the airbag parts from another vehicle. When replacing parts, replace them with new parts.**

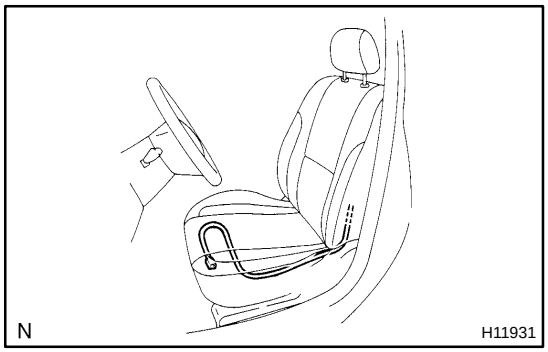

1. REMOVE FRONT SEAT

(a) Remove the 4 seat track covers and 4 bolts.

(b) Disconnect the power seat and side airbag connector.

NOTICE:

When handling the airbag connector, take care not to damage the airbag wire harness.

(c) Remove the front seat.

2. REMOVE HEADREST

3. Driver's seat with bench type:
REMOVE SEAT ARMREST ASSEMBLY

Remove the cover, bolt and seat armrest assembly.

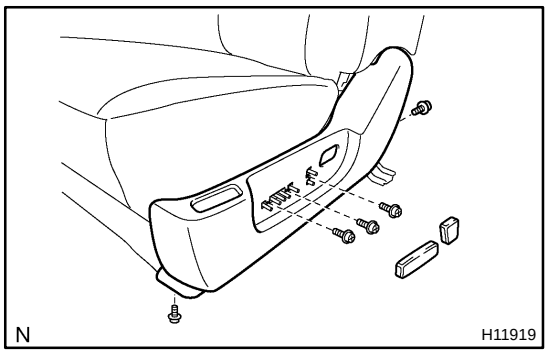

4. REMOVE POWER SEAT SWITCH KNOBS

5. REMOVE FRONT SEAT CUSHION SHIELD

Remove the 5 screws and front seat cushion shield, as shown in the illustration.

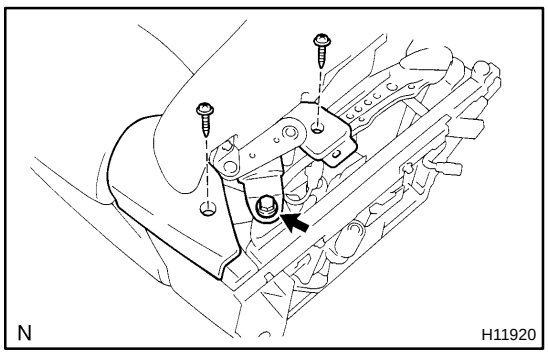

6. REMOVE FRONT SEAT INNER BELT

7. REMOVE FRONT SEAT CUSHION INNER SHIELD

Remove the 2 screws and front seat inner belt.

8. REMOVE SEAT CUSHION ASSEMBLY

(a) Remove the wire harness from the seat cushion assembly.

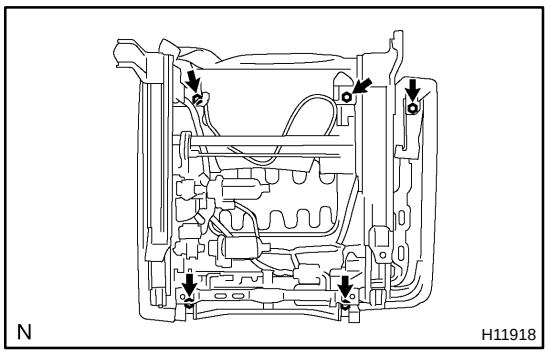

(b) Driver's seat with bench type:
Remove the 5 bolts and seat cushion assembly

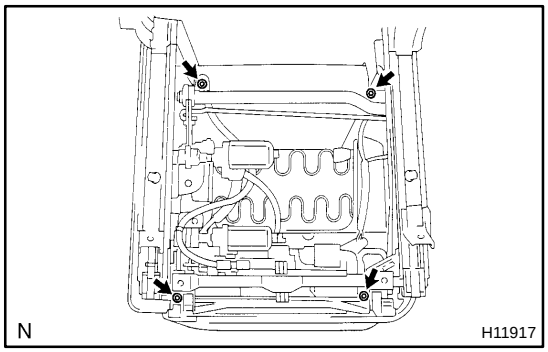

(c) Except driver's seat with bench type:
Remove the 4 bolts and seat cushion assembly.

9. REMOVE SEATBACK BOARD

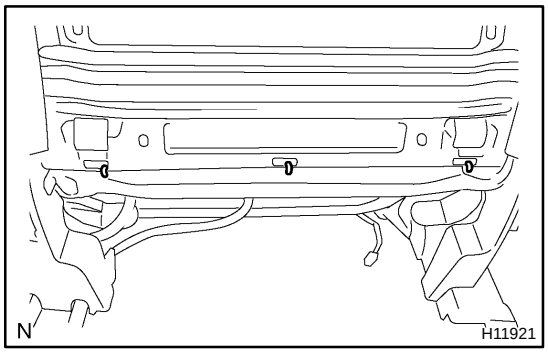

10. REMOVE SEATBACK ASSEMBLY

(a) Remove the hog rings, as shown in the illustration.

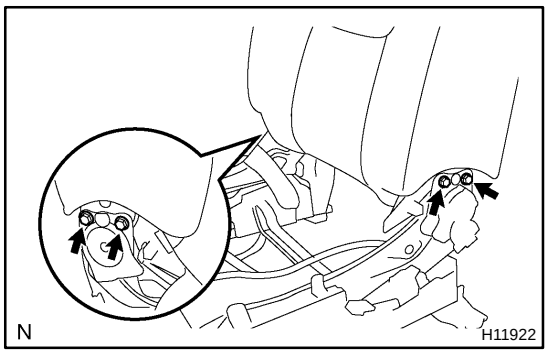

(b) Remove the 4 bolts and seatback assembly.

NOTICE:

Do not apply unnatural force to the airbag harness.

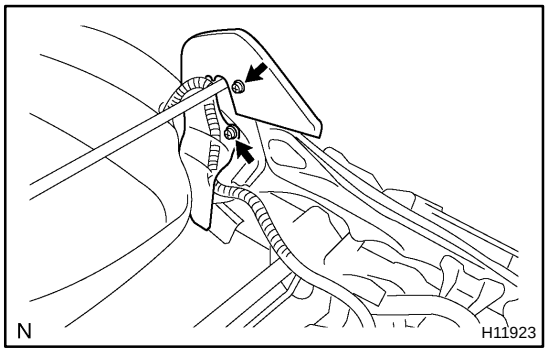

(c) Remove the 2 screws and reclining adjuster inside cover.

(d) Separate the wire harness from the reclining adjuster inside cover.

HINT:

Do the same for LH and RH.

RS0LD-01

REPLACEMENT

REPLACEMENT REQUIREMENTS

In the following cases, replace the seatback assembly or seatback cover.

Case	Replacing part
If the side airbag has been deployed.	Seatback assembly
If the side airbag assembly has been found to be faulty in troubleshooting.	Seatback assembly
If the side airbag assembly has cuts during checking items (See page RS-44).	Seatback assembly
If the seatback cover has cuts and frayed seams during checking items (See page RS-44).	Seatback cover
If the side airbag assembly has been found to be faulty during checking items (See page RS-44).	Seatback assembly
If the seatback cover has been found to be faulty during checking items (See page RS-44).	Seatback cover
If the seatback assembly has been dropped.	Seatback assembly

CAUTION:

For removal and installation of the seatback assembly, see page RS-42 and RS-52 . Be sure to follow the correct procedure.

SIDE AIRBAG SENSOR ASSEMBLY

RS06C-08

COMPONENTS

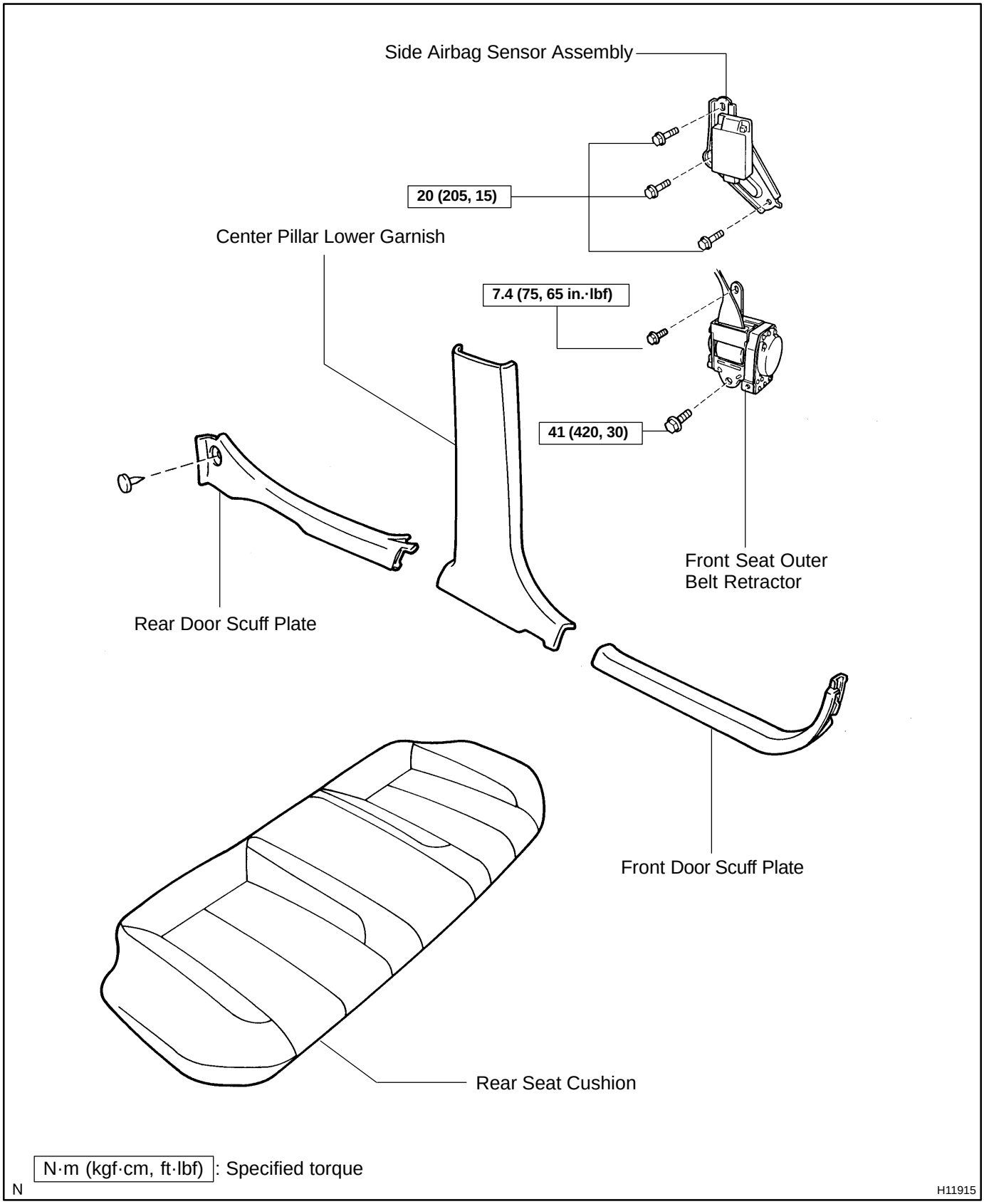

RS06E-07

INSPECTION

1. VEHICLES NOT INVOLVED IN COLLISION

Do a diagnostic system check (See page DI-349).

2. VEHICLE INVOLVED IN COLLISION AND AIRBAG IS NOT DEPLOYED

Do a diagnostic system check (See page DI-349).

3. VEHICLE INVOLVED IN COLLISION AND AIRBAG IS DEPLOYED

Replace the side airbag sensor assembly (See page DI-349).

RS0LY-01

INSTALLATION

NOTICE:

- **Never use SRS parts from another vehicle. When replacing parts, replace them with new ones.**
- **Never reuse the side airbag sensor assembly involved in a collision when the airbag has deployed.**
- **Never repair a sensor in order to reuse it.**

HINT:

For step 2 to 6, refer to page BO-137 .

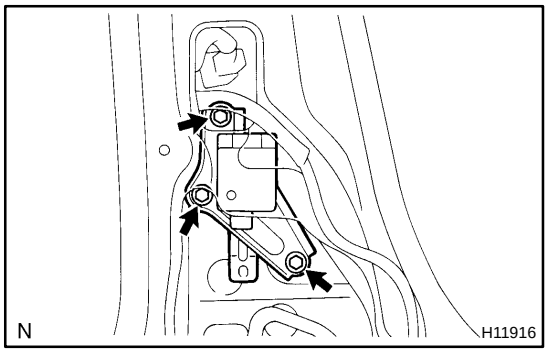

1. INSTALL SIDE AIRBAG SENSOR

(a) Install the side airbag assembly with 3 bolts.
Torque: 20 N·m (205 kgf·cm, 15 ft·lbf)

(b) Connect the connector.

NOTICE:

- **Connection of the connector is done after the sensor assembly has been installed.**
- **Make sure the sensor assembly is installed with the specified torque.**
- **If the sensor assembly has been dropped, or there are cracks, dents or other defects in the case, bracket or connector, replace the sensor assembly with a new one.**
- **When installing the sensor assembly, take care that the SRS wiring does not interfere with other parts and is not pinched between other parts.**
- **After installation, shake the sensor assembly to check that there is no looseness.**

2. INSTALL RETRACTOR OF FRONT SEAT OUTER BELT
Torque:
Upper bolt: 7.4 N·m (75 kgf·cm, 65 in.·lbf)
Lower bolt: 41 N·m (420 kgf·cm, 30 ft·lbf)

3. INSTALL CENTER PILLAR LOWER GARNISH

4. INSTALL FRONT DOOR SCUFF PLATE

5. INSTALL REAR DOOR SCUFF PLATE

6. INSTALL REAR SEAT CUSHION

RS0LX-01

REMOVAL

NOTICE:

Do not open the cover or the case of the ECU and various electrical devices unless absolutely necessary.

(If the IC terminals are touched, the IC may be destroyed by static electricity.)

HINT:

For step 1 to 5, refer to page BO-128 .

1. **REMOVE REAR SEAT CUSHION**
2. **REMOVE REAR DOOR SCUFF PLATE**
3. **REMOVE FRONT DOOR SCUFF PLATE**
4. **REMOVE CENTER PILLAR LOWER GARNISH**
5. **REMOVE RETRACTOR OF FRONT SEAT OUTER BELT**

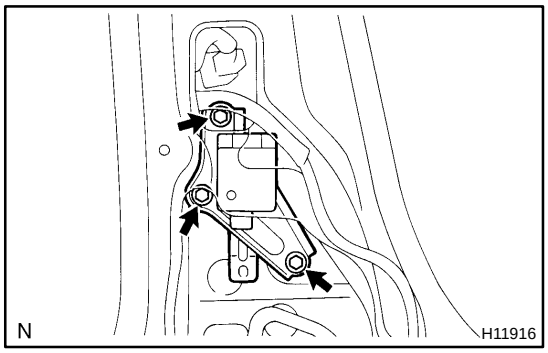

6. **REMOVE SIDE AIRBAG SENSOR ASSEMBLY**

(a) Disconnect the connector.

NOTICE:

Remove the connector with the sensor assembly installed.

(b) Remove the 3 bolts and side airbag sensor assembly.

RS06F-04

REPLACEMENT

REPLACEMENT REQUIREMENTS

In the following cases, replace the side airbag sensor assembly.

- If the side airbag assembly has been deployed in a collision.
- If the side airbag sensor assembly has been found to be faulty in troubleshooting.
- If the side airbag sensor assembly has been dropped.

CAUTION:

For removal and installation of the side airbag sensor assembly, see page RS-78 and RS-81 . Be sure to follow the correct procedure.

RS0EF-02

OPERATION

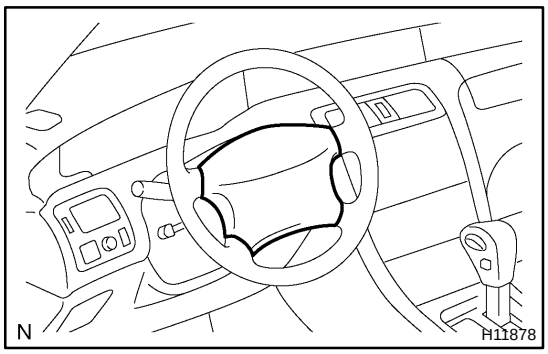

1. STEERING WHEEL PAD (with AIRBAG)

The inflater and bag of the SRS are stored in the steering wheel pad and cannot be disassembled. The inflater contains a squib, igniter charge, gas generator, etc., and inflates the bag when instructed by the airbag sensor assembly.

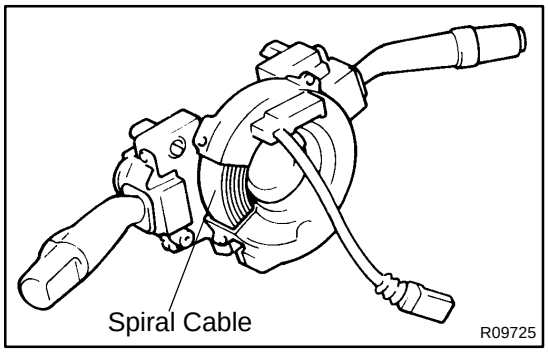

2. SPIRAL CABLE (in COMBINATION SWITCH)

A spiral cable is used as an electrical joint from the vehicle body side to the steering wheel.

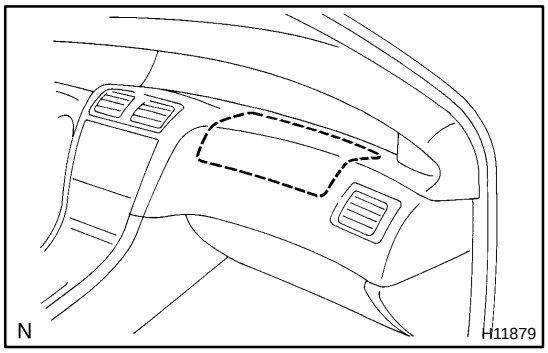

3. FRONT PASSENGER AIRBAG ASSEMBLY

The inflater and bag of the SRS are stored in the front passenger airbag assembly and cannot be disassembled. The inflater contains a squib, igniter charge, gas generator, etc., and inflates the bag when instructed by the airbag sensor assembly.

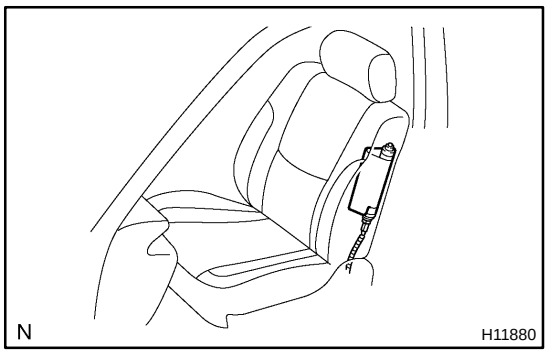

4. SIDE AIRBAG ASSEMBLY

The inflater and bag of the SRS side airbag are stored in the side airbag assembly and cannot be disassembled. The inflater contains a squib, igniter charge, gas generator, etc., and inflates the bag when instructed by the side airbag sensor assembly.

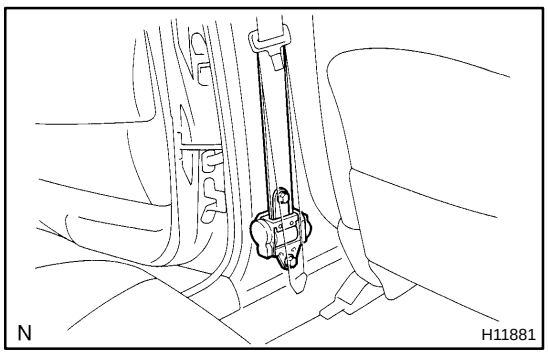

5. SEAT BELT PRETENSIONER

The seat belt pretensioner system is a component of the front seat outer belt. The pretensioner contains a squib, gas generator, wire, piston, etc., and operates in the event of a frontal collision. The seat belt pretensioner cannot be disassembled.

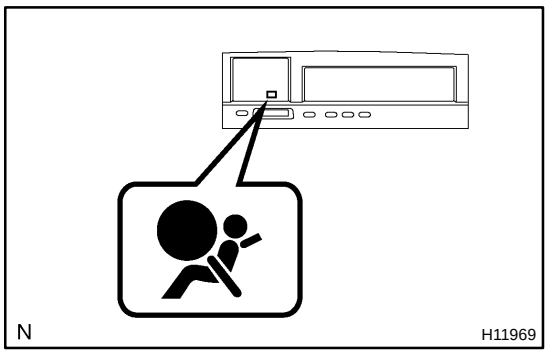

6. SRS WARNING LIGHT

The SRS warning light is located on the accessory meter. It goes on to alert the driver of trouble in the system when a malfunction is detected in the airbag sensor assembly self-diagnosis. In normal operation conditions when the ignition switch is turned to the ACC or ON position, the light goes on for about 6 seconds and then goes off.

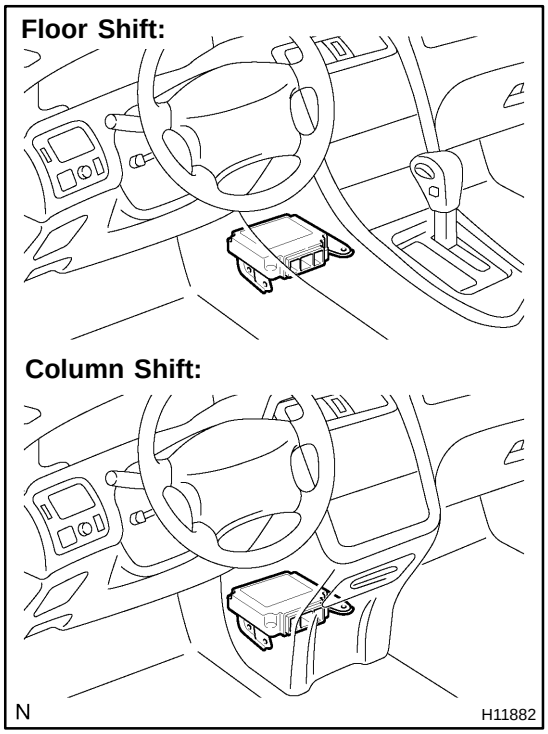

7. AIRBAG SENSOR ASSEMBLY

The airbag sensor assembly is mounted on the floor inside the lower center finish panel. The airbag sensor assembly consists of an airbag sensor, safing sensor, diagnosis circuit, ignition control, drive circuit, etc. It receives signals from the airbag sensor, front airbag sensor, side airbag sensor assembly and door side airbag assembly and judges whether the SRS must be activated or not. The airbag sensor assembly cannot be disassembled.

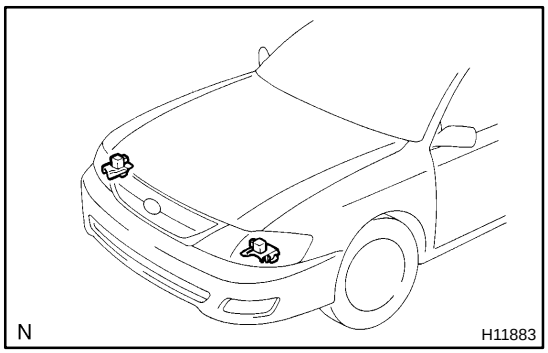

8. FRONT AIRBAG SENSOR

The front airbag sensor is mounted inside each of the side members. The sensor unit is a mechanical type. When the sensor detects deceleration force above a predetermined limit, contact is made in the sensor, sending a signal to the airbag sensor assembly. The front airbag sensor cannot be disassembled.

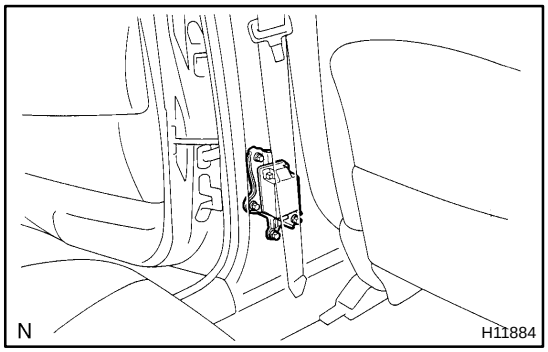

9. SIDE AIRBAG SENSOR ASSEMBLY

The side airbag sensor assembly is mounted in the LH and RH center pillars. The side airbag sensor assembly consists of a lateral deceleration sensor, safing sensor, diagnosis circuit, etc. It sends signals to the airbag sensor assembly to judge whether the SRS side airbag must be activated or not. The side airbag sensor assembly cannot be disassembled.

10. SRS CONNECTORS

HINT:

SRS connectors are located as shown in the following illustration.

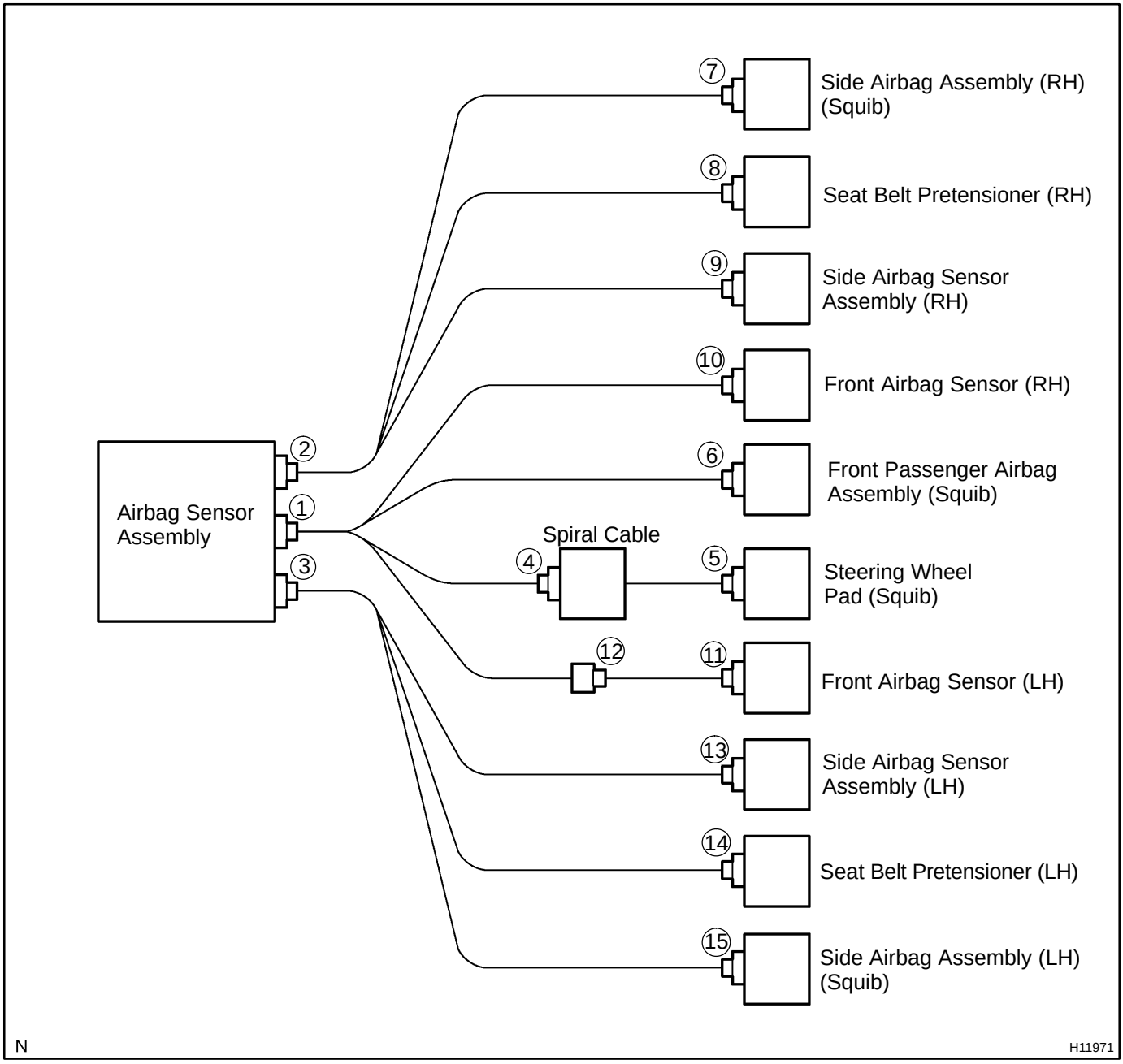

No.	Item	Application
(1)	Terminal Twin-Lock Mechanism	Connectors 1, 2, 3, 4, 5, 6, 7, 8, 9, 10, 11, 12, 13, 14, 15
(2)	Airbag Activation Prevention Mechanism	Connectors 1, 2, 3, 4, 5, 6, 7, 15
(3)	Electrical Connection Check Mechanism	Connectors 1, 2, 3
(4)	Connector Twin-Lock Mechanism	Connectors 5

(a) All connectors in the SRS are colored in yellow to distinguish them from other connectors. Connectors having special functions and specifically designed for the SRS are used in the locations shown on the previous page to ensure high reliability. These connectors use durable gold-plated terminals.

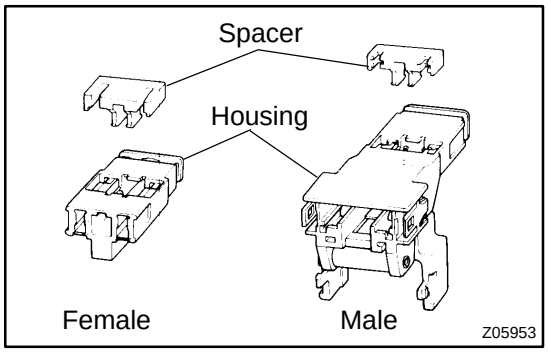

(1) Terminal Twin-Lock Mechanism
Each connector has a two-piece component consisting of a housing and a spacer. This design enables the terminal to be locked securely by two locking devices (the retainer and the lance) to prevent terminals from coming out.

(2) Airbag Activation Prevention Mechanism
Each connector contains a short spring plate. When the connector is disconnected, the short spring plate automatically connects positive (+) terminal and negative (-) terminal of the squib.

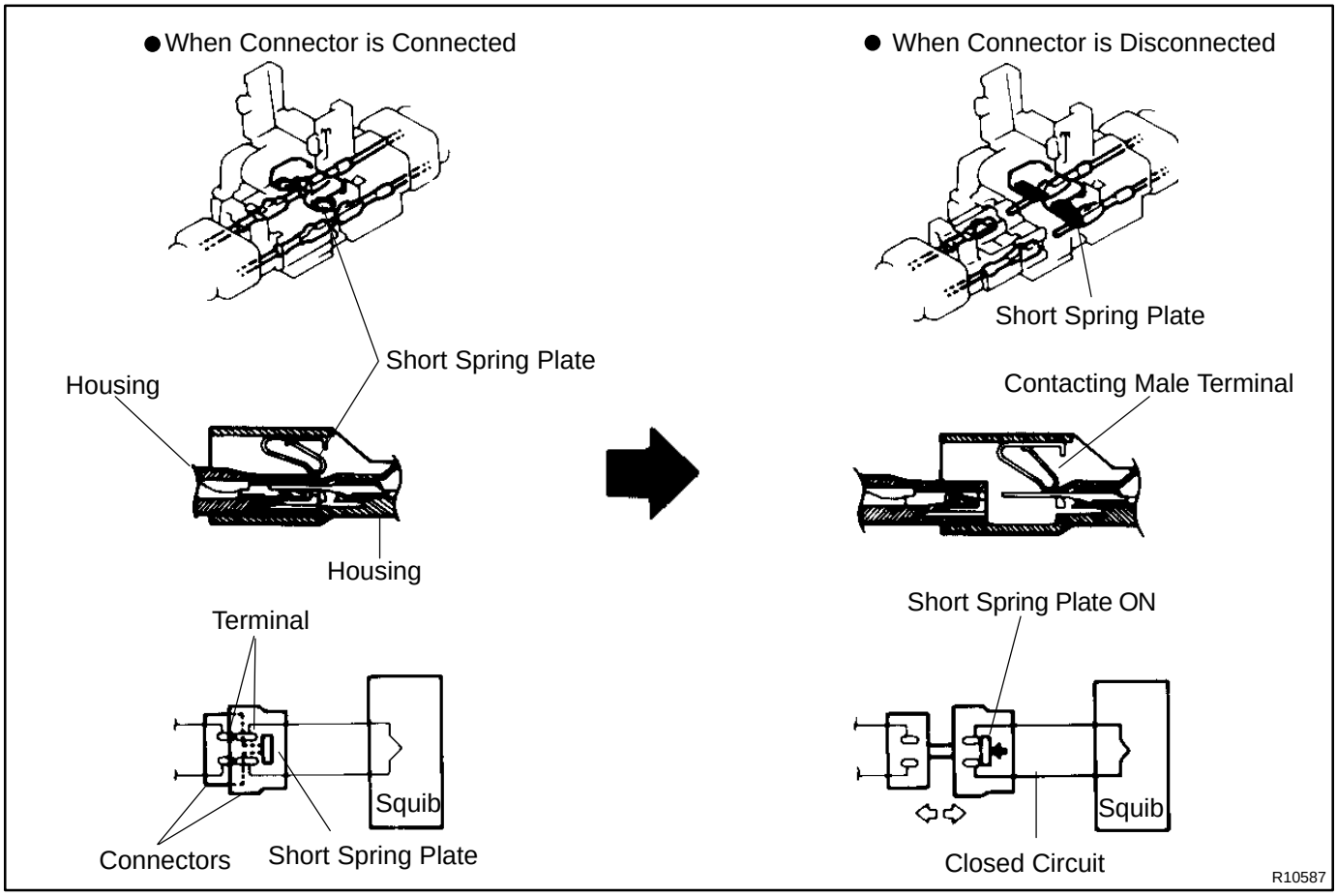

HINT:
The type of connector is shown in the diagram on the previous page.

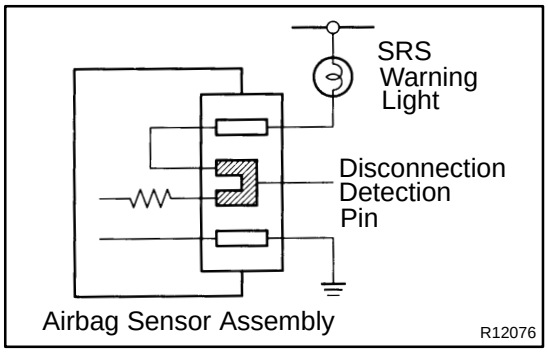

(3) Electrical Connection Check Mechanism
This mechanism electrically checks that connectors are connected correctly and completely. The electrical connection check mechanism is designed so that the disconnection detection pin connects with the diagnosis terminals when the connector housing lock is locked.

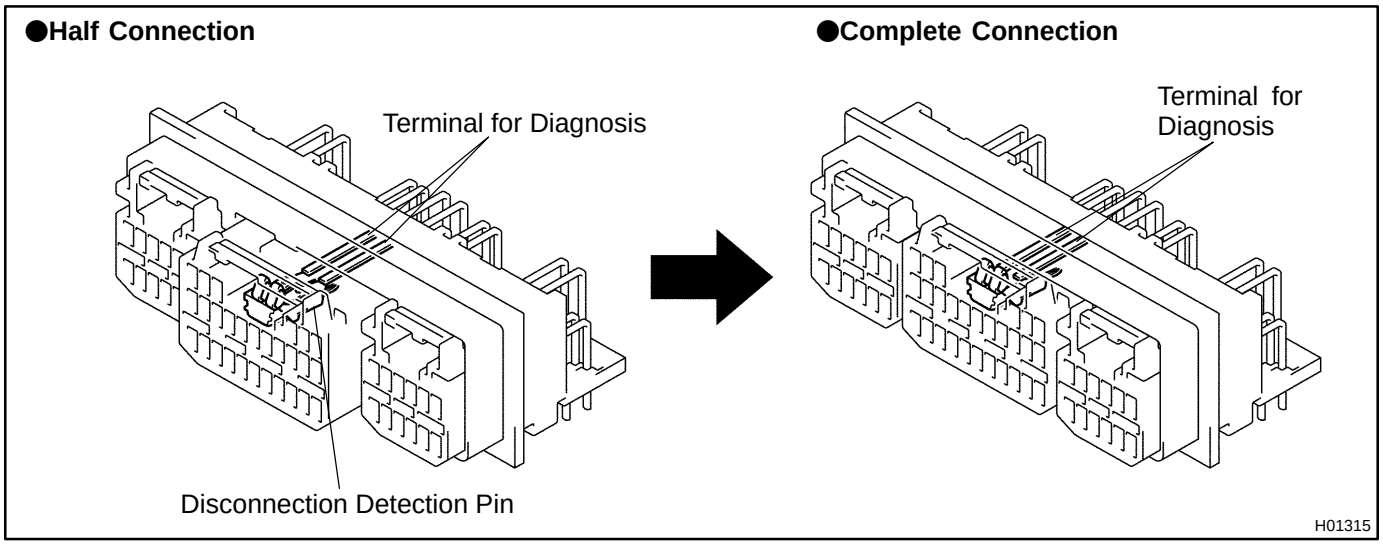

HINT:
The illustration shows connectors ”1”, ”2” and ”3” in step 10.

(4) Connector Twin-Lock Mechanism
With this mechanism connectors (male and female connectors) are locked by 2 locking devices to increase the connection reliability. If the primary lock is incomplete, ribs interfere and prevent the secondary lock.

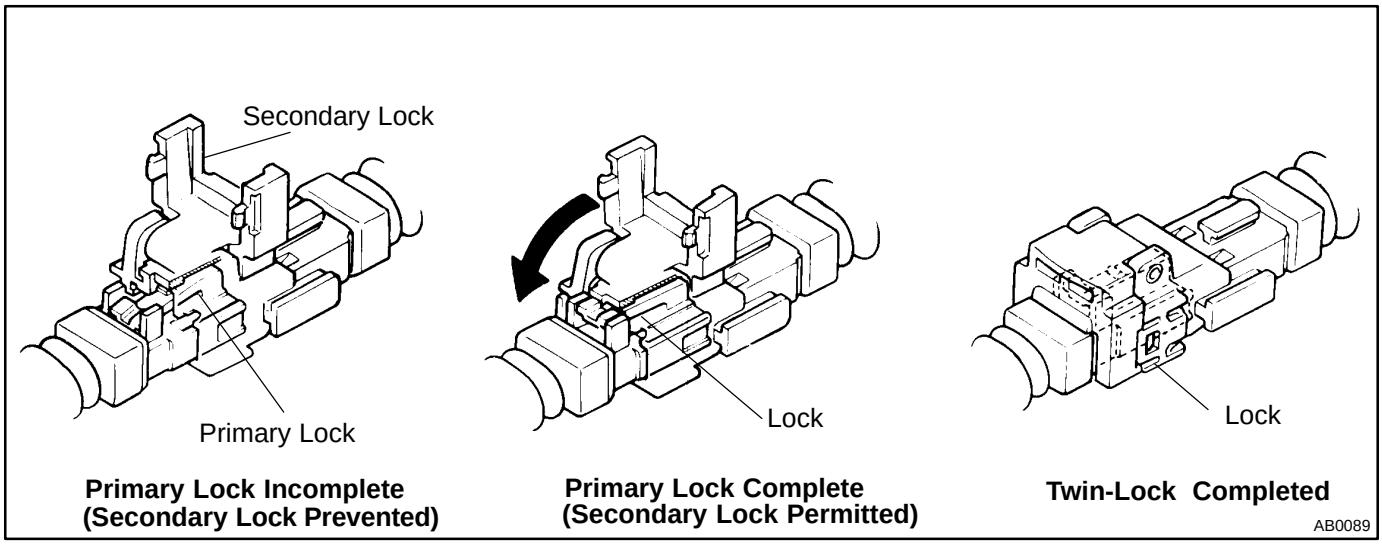

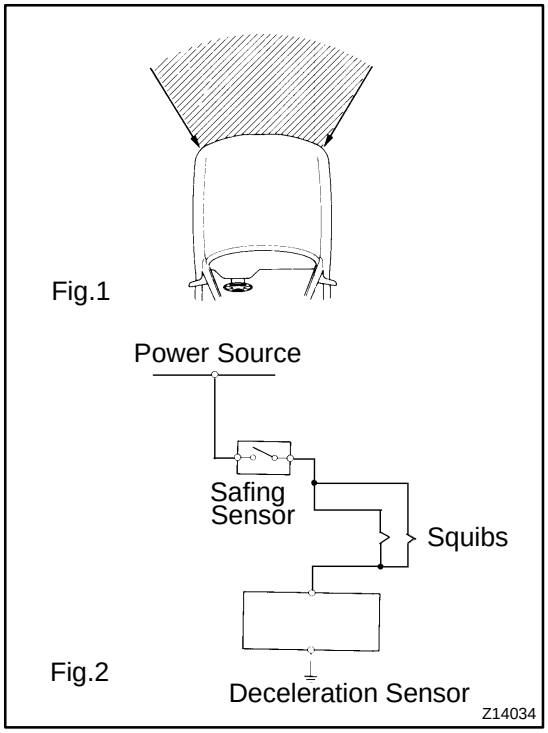

(b) When the vehicle is involved in a frontal collision in the hatched area (Fig. 1) and the shock is larger than the predetermined level, the SRS is activated automatically. A safing sensor is designed to go on at a smaller deceleration rate than the airbag sensor. As illustrated in Fig. 2, ignition is caused when current flows to the squib, which happens when a safing sensor and the deceleration sensor go on simultaneously. When a deceleration force acts on the sensors, 2 squibs in the driver airbag and front passenger airbag ignite and generate gas. The gas discharging into the driver airbag and front passenger airbag rapidly increases the pressure inside the bags, breaking open the steering wheel pad and instrument panel.
Bag inflation then ends, and the bags deflate as the gas is discharged through discharge holes at the bag's rear or side.

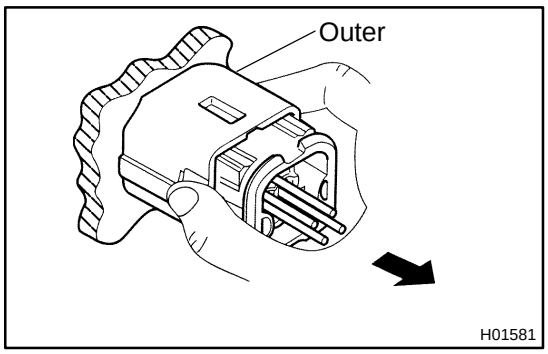

11. DISCONNECTION OF CONNECTORS FOR FRONT AIRBAG SENSOR AND SIDE AIRBAG SENSOR

(a) While holding both flank sides of the outer, slide the outer to the direction shown by an arrow.

(b) Lock of the connectors is released, then disconnect the connectors.

HINT:

Be sure to hold both flank sides of the outer. If holding the top and bottom sides, it will obstruct disconnection.

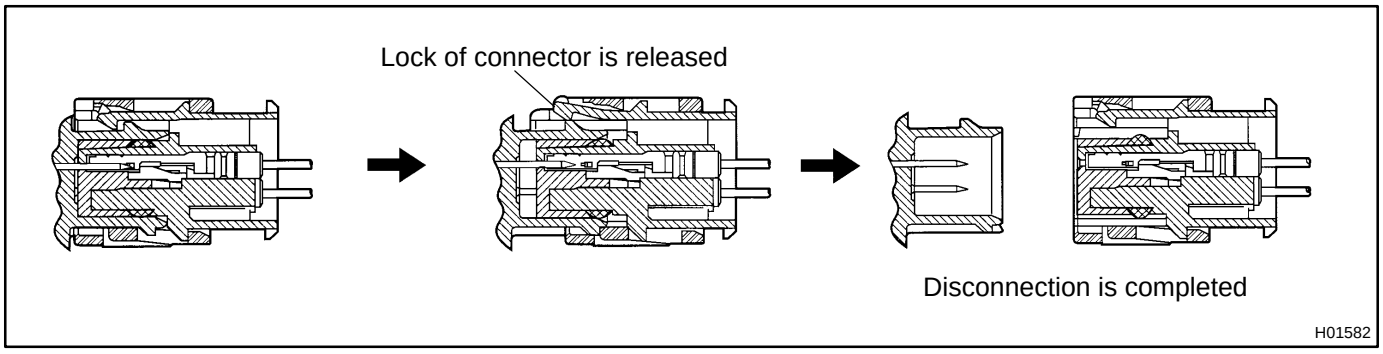

12. CONNECTION OF CONNECTORS FOR FRONT AIRBAG SENSOR AND SIDE AIRBAG SENSOR

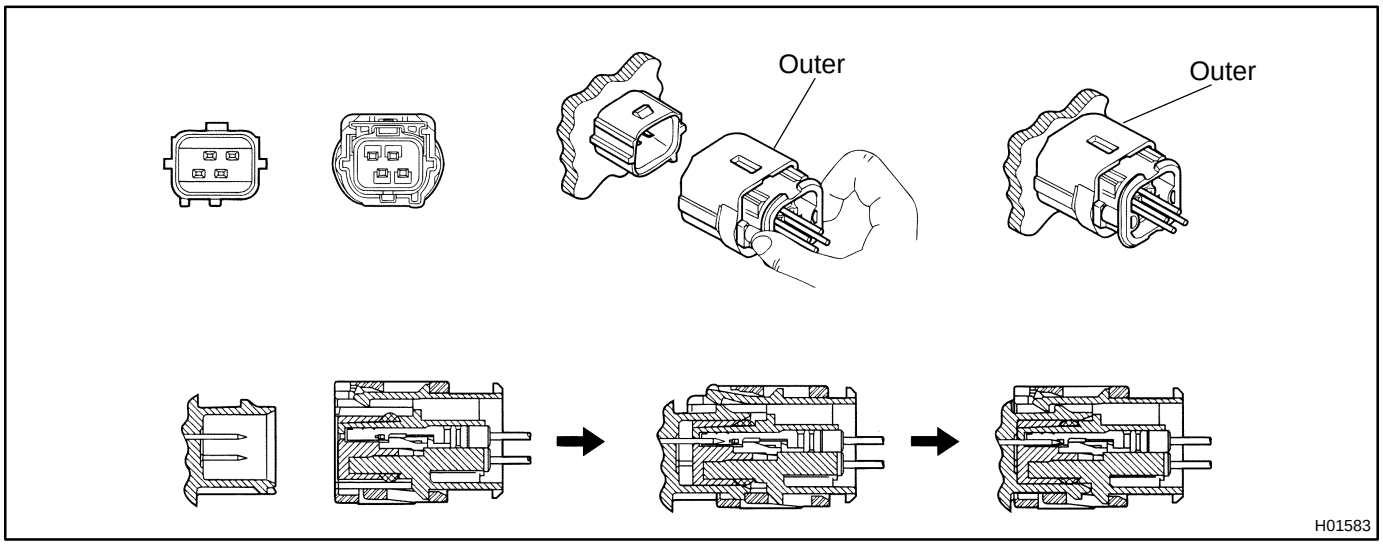

(a) Align the male connector (of the side of sensor) and female connector in the same direction as shown in the illustration and fit in them without rubbing.

(b) As they are fitted in, the outer slides rearward. Press it until the outer returns to its original position again.

If fitting stops half way, connectors will separate.

(c) Be sure to insert until they are locked. After fitting in, pull them slightly to check that they are locked (When locked, make sure that the outer returns to its original position and sound at the time of fitting in can be heard.).

HINT:

Do not fit in while holding the outer.

When fitting in, the outer slides. Do not touch it.

13. DISCONNECTION OF SIDE AIRBAG CONNECTOR

(a) Place a finger on the slider.

(b) Slide the slider to release lock.

(c) Disconnect the connector.

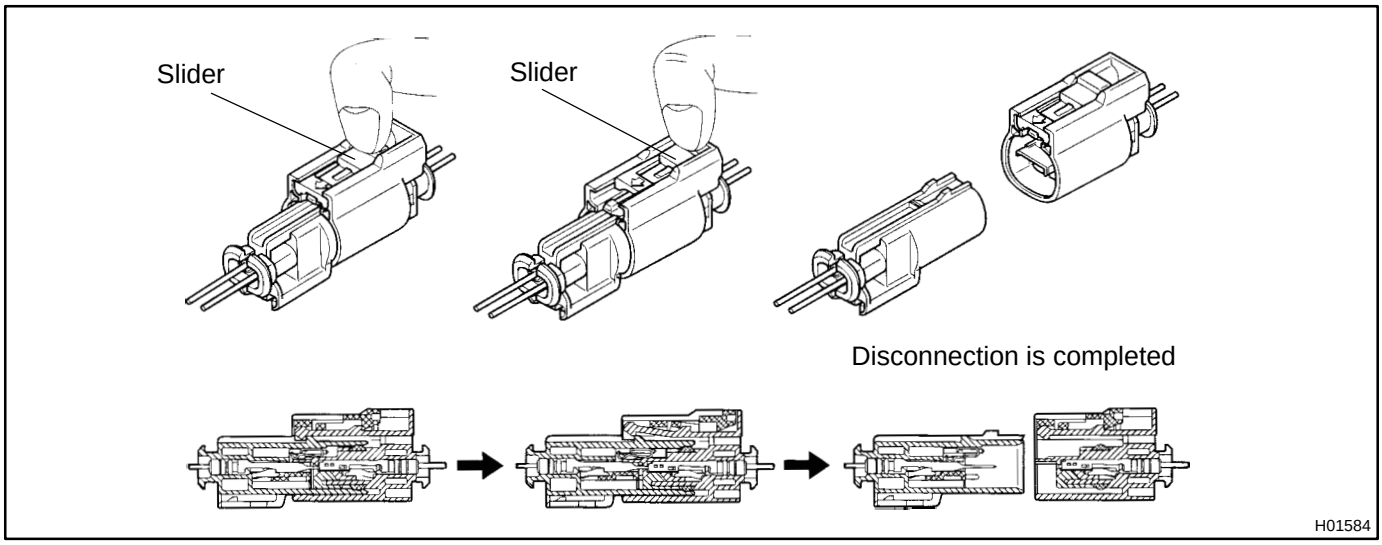

14. CONNECTION OF SIDE AIRBAG CONNECTOR

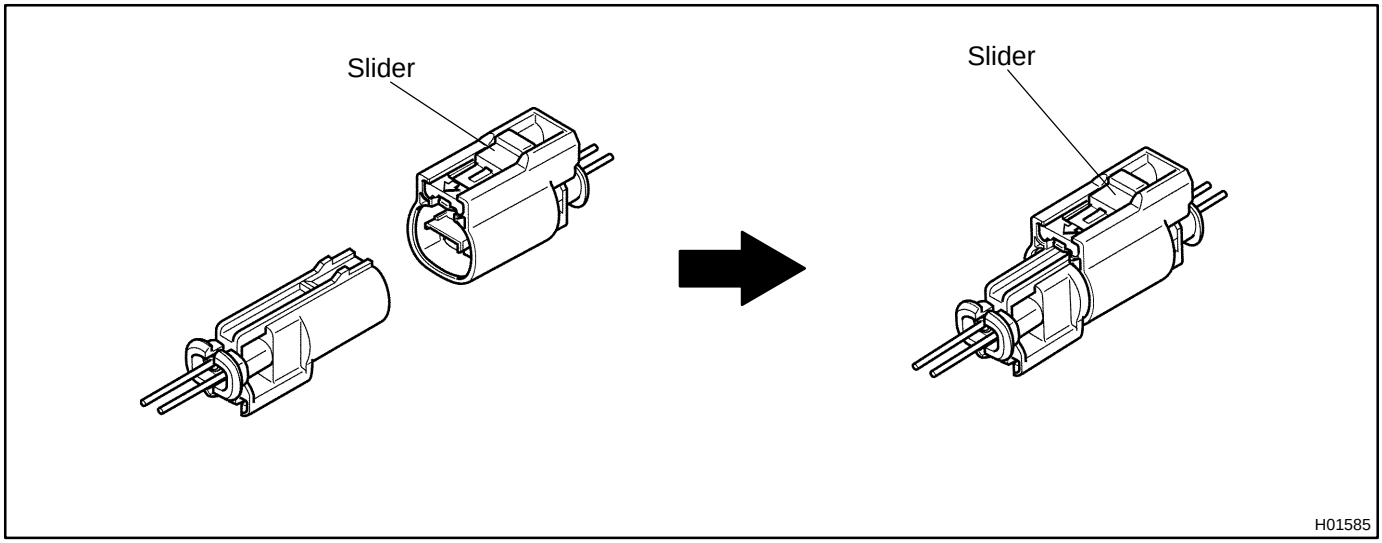

(a) Align a lock part of male connector and a slider of female connector in the same direction as shown in the illustration, fit in them without rubbing.
(b) Be sure to insert until they are locked. After fitting in pull them slightly to check that they are locked. (When locked, make sure that the outer returns to its original position and sound at the time of fitting in can be heard.)

HINT:

As the slider slides, do not touch it.
Be careful not to deform the release board. If the release board is deformed, replace it with a new one.

15. DISCONNECTION OF CONNECTORS FOR STEERING WHEEL PAD (with AIRBAG) AND FRONT PASSENGER AIRBAG ASSEMBLY

(a) Place a finger on the slider.
(b) Slide the slider to release lock.
(c) Disconnect the connector.

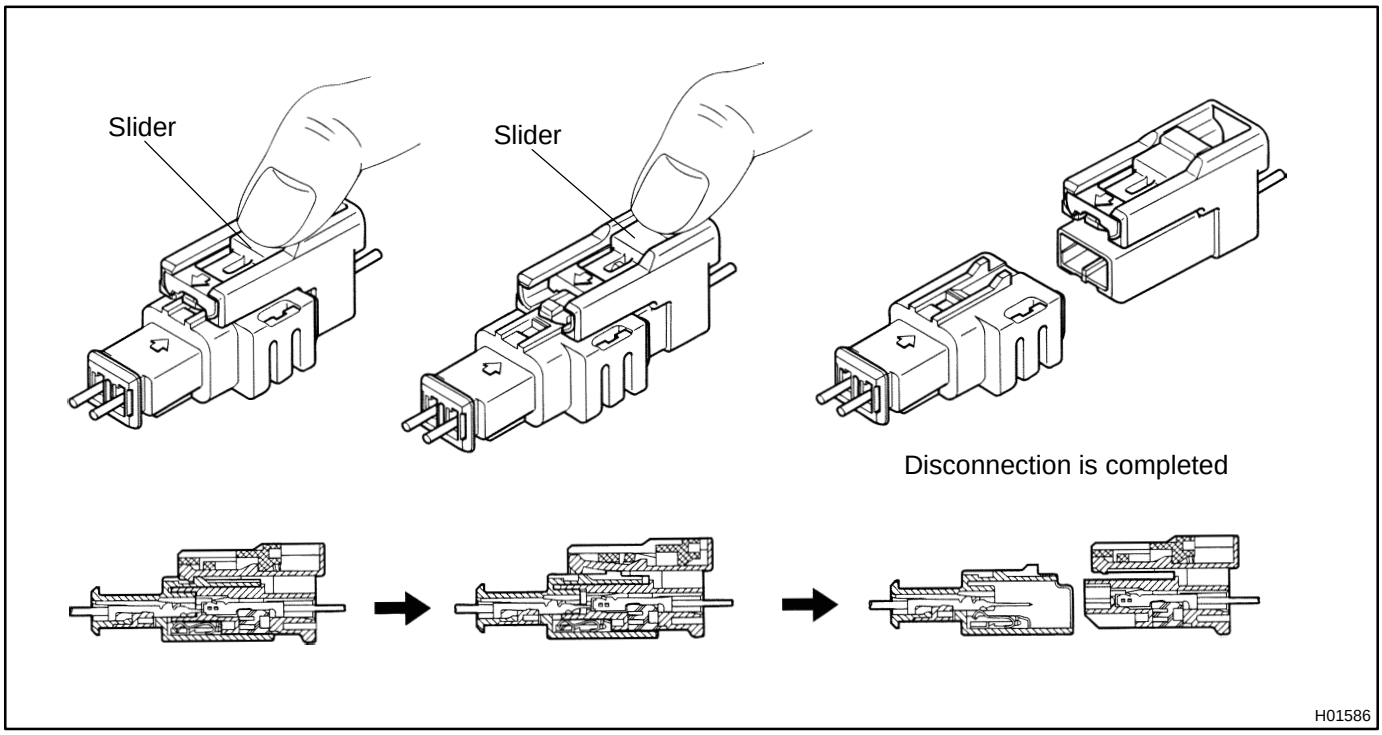

16. CONNECTION OF CONNECTORS FOR STEERING WHEEL PAD (with AIRBAG) AND FRONT PASSENGER AIRBAG ASSEMBLY

(a) Align a lock part of male connector and a slider of female connector in the same direction as shown in the illustration, fit in them without rubbing.

(b) Be sure to insert until they are locked. After fitting in pull them slightly to check that they are locked. (When locked, make sure that the outer returns to its original position and sound at the time of fitting in can be heard.)

HINT:

As the slider slides, do not touch it.

Be careful not to deform the release board. If the release board is deformed, replace it with a new one.

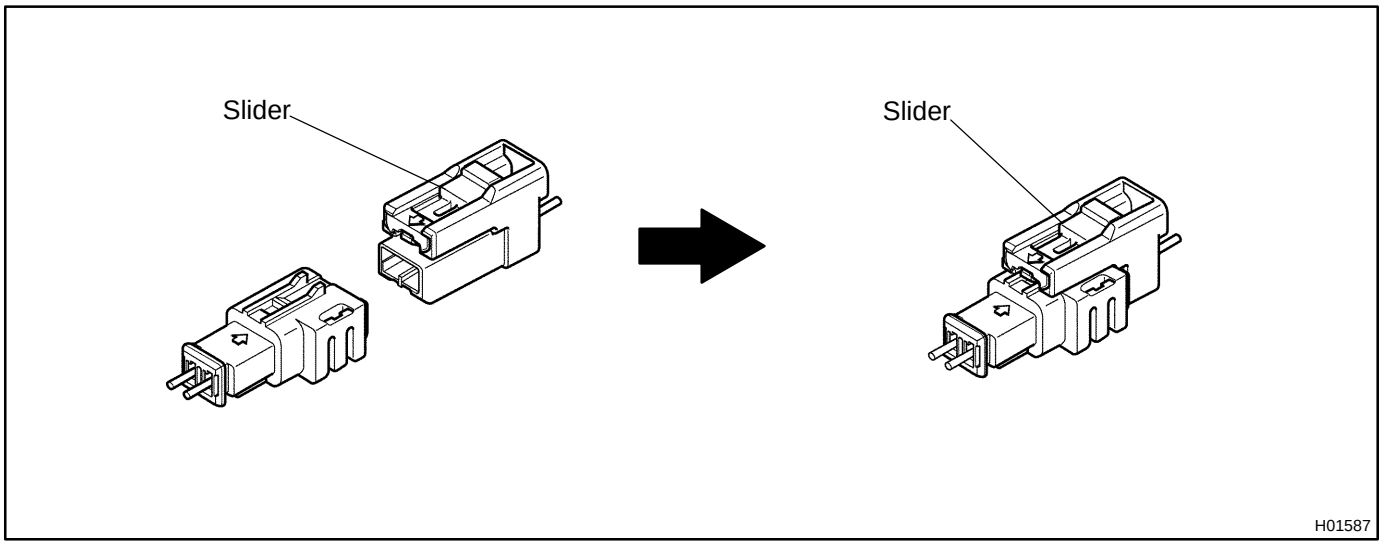

SRS AIRBAG

RS01Y-34

PRECAUTION

CAUTION:

- **The AVALON is equipped with SRS, which comprises a driver airbag, front passenger airbag and side airbag. Failure to carry out service operations in the correct sequence could cause the SRS to unexpectedly deploy during servicing, possibly leading to a serious accident. Further, if a mistake is made in servicing the SRS, it is possible that the SRS may fail to operate when required. Before performing servicing (including removal or installation of parts, inspection or replacement), be sure to read the following items carefully, then follow the correct procedures described in the repair manual.**
- **Work must be started 90 seconds after the ignition switch is turned to the "LOCK" position and the negative (-) terminal cable is disconnected from the battery.**
  (The SRS is equipped with a back-up power source so that if work is started within 90 seconds from disconnecting the negative (-) terminal cable of the battery, the SRS may be deployed.)
- **Do not expose the steering wheel pad, front passenger airbag assembly, side airbag assembly, airbag sensor assembly, front airbag sensor or side airbag sensor assembly directly to hot air or flames.**

NOTICE:

- **Malfunction symptoms of the SRS are difficult to confirm, so the DTCs become the most important source of information when troubleshooting. When troubleshooting the SRS, always inspect the DTCs before disconnecting the battery.**
- **Even in cases of a minor collision where the SRS does not deploy, the steering wheel pad, front passenger airbag assembly, side airbag assembly, airbag sensor assembly, front airbag sensor and side airbag sensor assembly should be inspected.**
  (See page RS-15 , RS-30 , RS-44 , RS-57 , RS-64 , RS-69 , RS-74 and RS-79)
- **Before repairs, remove the airbag sensor if shocks are likely to be applied to the sensor during repairs.**
- **Never use SRS parts from another vehicle. When replacing parts, replace them with new parts.**
- **Never disassemble and repair the steering wheel pad, front passenger airbag assembly, side airbag assembly, airbag sensor assembly, front airbag sensor or side airbag sensor assembly in order to reuse it.**
- **If the steering wheel pad, front passenger airbag assembly, side airbag assembly, airbag sensor assembly, front airbag sensor or side airbag sensor assembly has been dropped, or if there are cracks, dents or other defects in the case, bracket or connector, replace it with new one.**
- **Use a volt/ohmmeter with high impedance (10 kΩ/V minimum) for troubleshooting the system's electrical circuits.**
- **Information labels are attached to the periphery of the SRS components. Follow the instructions on the notices.**
- **After work on the SRS is completed, perform the SRS warning light check (See page DI-349).**
- **When the negative (-) terminal cable is disconnected from the battery, the memory of the clock and audio system will be canceled. So before starting work, make a record of the contents memorized in the audio memory system. When work is finished, reset the audio systems as they were before and adjust the clock. This vehicle has power seat which are all equipped with memory function. However, it is not possible to make a record of the memory contents. So when the work is finished, it will be necessary to explain this fact to the customer, and ask the customer to adjust the features and reset the memory. To avoid erasing the memory in each memory system, never use a back- up power supply from outside the vehicle.**

- **If the vehicle is equipped with a mobile communication system, refer to the precaution in the IN section.**

STEERING WHEEL PAD AND SPIRAL CABLE

RS00Y-47

COMPONENTS

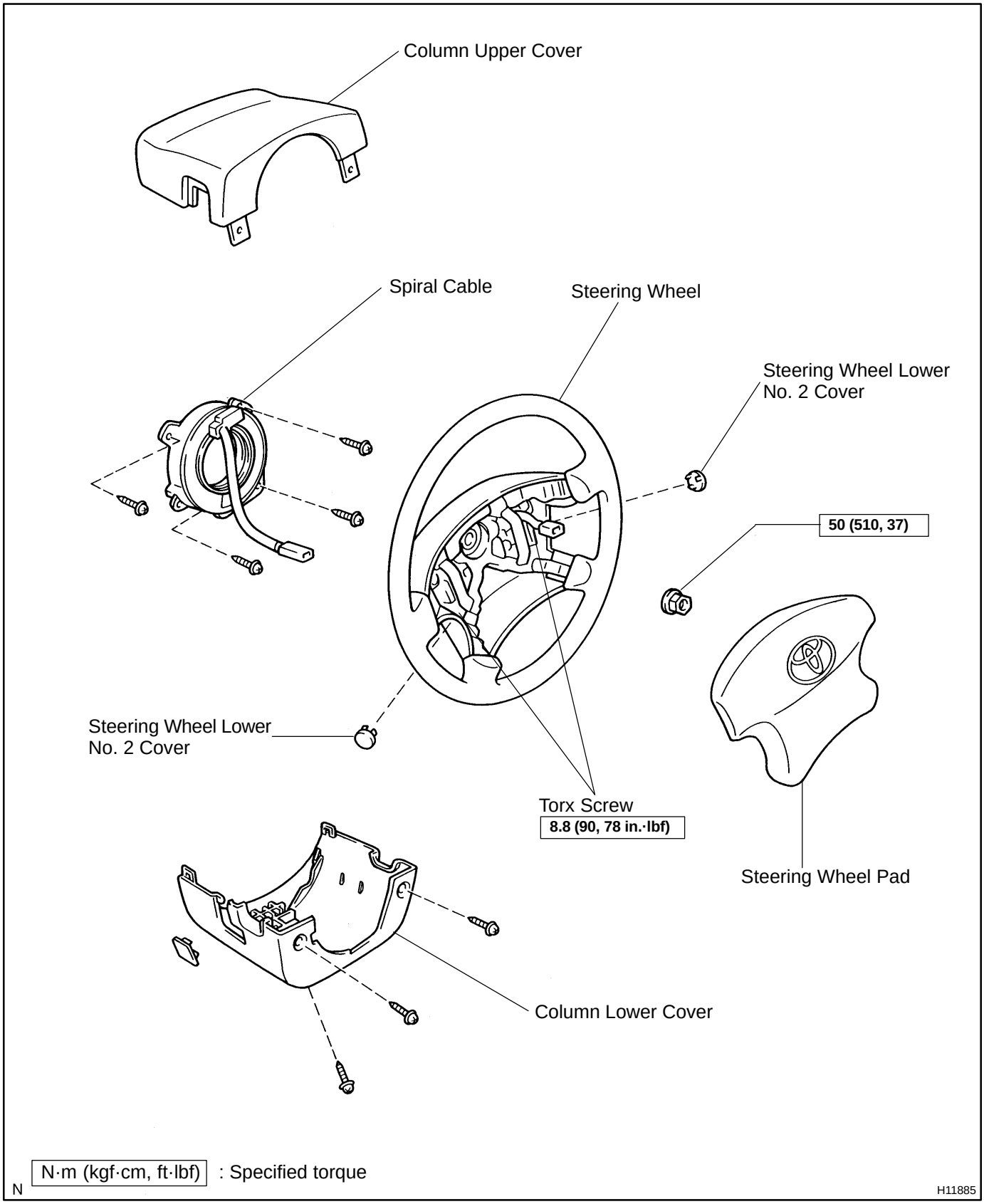

RS0L5-01

DISPOSAL

HINT:

When scrapping vehicle equipped with an SRS or disposing of a steering wheel pad (with airbag), always first deploy the airbag in accordance with the procedure described below. If any abnormality occurs with the airbag deployment, contact the SERVICE DEPT. of TOYOTA MOTOR SALES, U.S.A., INC.

CAUTION:

- **Never dispose of a steering wheel pad which has an undeployed airbag.**
- **The airbag produces a sizeable exploding sound when it deploys, so perform the operation out-of-doors and where it will not create a nuisance to nearby residents.**

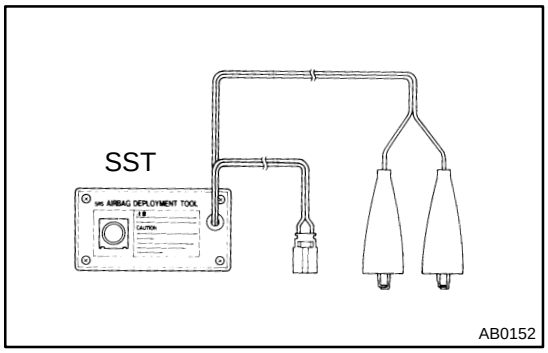

- **When deploying the airbag, always use the specified SST (SRS Airbag Deployment Tool). Perform the operation in a place away from electrical noise.**
  SST 09082-00700
- **When deploying an airbag, perform the operation at least 10 m (33 ft) away from the steering wheel pad.**
- **The steering wheel pad is very hot when the airbag is deployed, so leave it alone for at least 30 minutes after deployment.**
- **Use gloves and safety glasses when handling a steering wheel pad with the deployed airbag.**
- **Always wash your hands with water after completing the operation.**
- **Do not apply water, etc. to a steering wheel pad with the deployed airbag.**

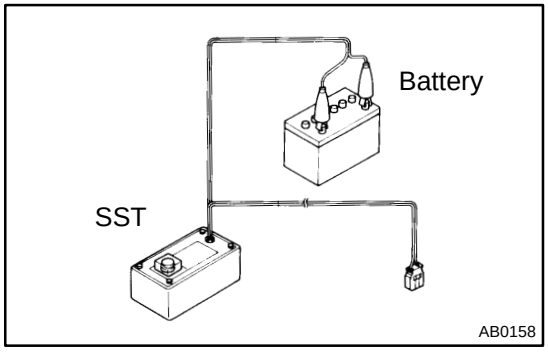

1. AIRBAG DEPLOYMENT WHEN SCRAPPING VEHICLE

HINT:

Have a battery ready as the power source to deploy the airbag.

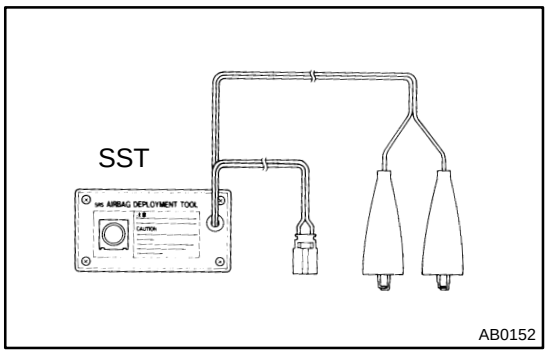

(a) Check functioning of the SST.

CAUTION:

When deploying the airbag, always use the specified SST: SRS Airbag Deployment Tool.

SST 09082-00700

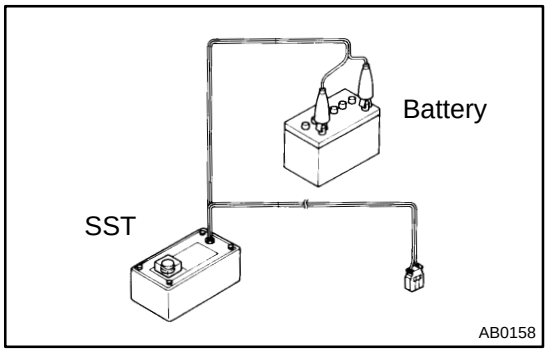

(1) Connect the red clip of the SST to the battery positive (+) terminal and the black clip to the battery negative (-) terminal.

HINT:

Do not connect the yellow connector which will be connected with the supplemental restraint system.

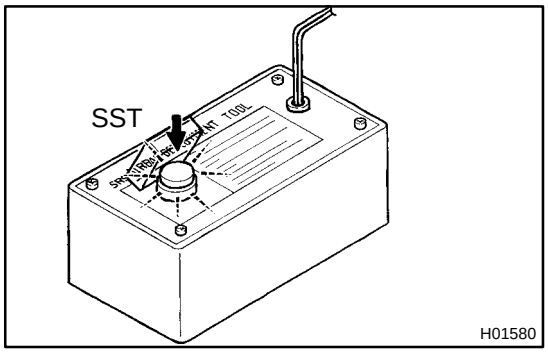

(2) Press the SST activation switch, and check that the LED of the SST activation switch lights up.

CAUTION:

If the LED lights up when the activation switch is not being pressed, SST malfunction is probable, so definitely do not use the SST.

(3) Disconnect the SST from the battery.

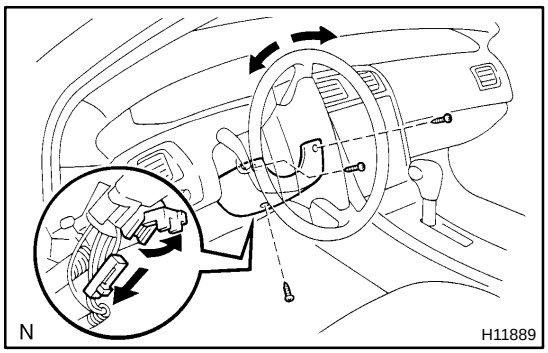

(b) Install the SST.

CAUTION:

Check that there is no looseness in the steering wheel and steering wheel pad.

(1) Remove the steering column lower cover.
Remove the 3 screws and steering column lower cover as shown in the illustration.

(2) Disconnect the airbag connector of the spiral cable.

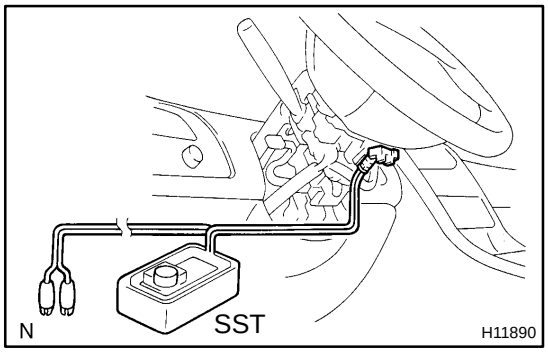

(3) Connect the connector of the SST to the airbag connector of the spiral cable.

SST 09082-00700

NOTICE:

To avoid damaging the connector of the SST and wire harness, do not lock the secondary lock of the twin lock.

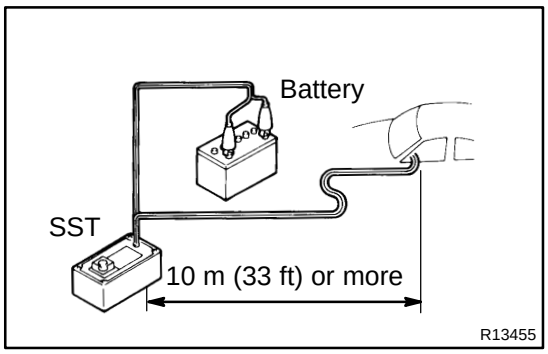

(4) Move the SST at least 10 m (33 ft) away from the front of the vehicle.
(5) Close all the doors and windows of the vehicle.

NOTICE:

Take care not to damage the SST wire harness.

(6) Connect the SST red clip to the battery positive (+) terminal and the black clip to the negative (-) terminal.

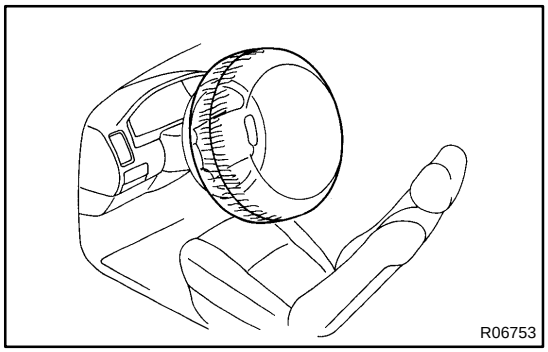

(c) Deploy the airbag.
(1) Check that no one is inside the vehicle or within 10 m (33 ft) area around the vehicle.
(2) Press the SST activation switch and deploy the airbag.

CAUTION:

- **The steering wheel pad is very hot when the airbag is deployed, so leave it alone for at least 30 minutes after deployment.**
- **Use gloves and safety glasses when handling a steering wheel pad with the deployed airbag.**
- **Always wash your hands with water after completing the operation.**
- **Do not apply water, etc. to a steering wheel pad with the deployed airbag.**
- **When scrapping a vehicle, deploy the airbag and scrap the vehicle with the steering wheel pad still installed.**
- **When moving a vehicle for scrapping which has a steering wheel pad with deployed airbag, use gloves and safety glasses.**

HINT:

The airbag deploys simultaneously as the LED of the SST activation switch lights up.

2. DEPLOYMENT WHEN DISPOSING OF STEERING WHEEL PAD ONLY

NOTICE:

- **When disposing of the steering wheel pad (with airbag) only, never use the customers vehicle to deploy the airbag.**
- **Be sure to follow the procedure given below when deploying the airbag.**

HINT:

Have a battery ready as the power source to deploy the airbag.

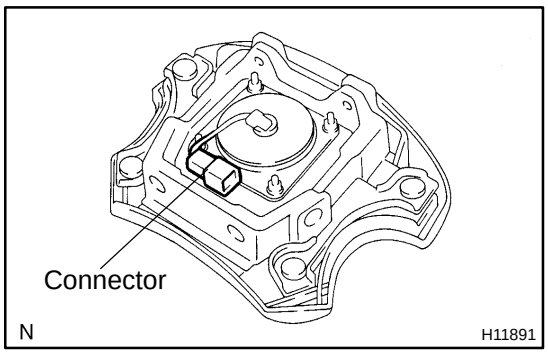

(a) Remove the steering wheel pad (See page SR-12).

CAUTION:

- **When removing the steering wheel pad, work must be started 90 seconds after the ignition switch is turned to the "LOCK" position and the negative (-) terminal cable is disconnected from the battery.**
- **When storing the steering wheel pad, keep the upper surface of the pad facing upward.**

(b) Remove the connector on the rear surface of the steering wheel pad from the bracket.

(c) Using a service-purpose wire harness tie down the steering wheel pad to the disc wheel.

Wire harness: Stripped wire harness section 1.25 mm^2 or more (0.0019 in^2. or more)

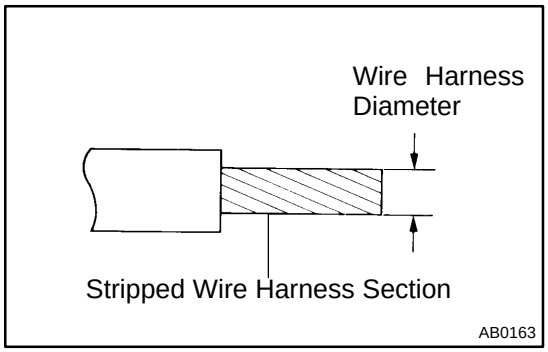

CAUTION:

If a wire harness which is too thin or some other thing is used to tie down the steering wheel pad, it may be snapped by the shock when the airbag is deployed. This is highly dangerous. Always use a wire harness for vehicle use which is at least 1.25 mm^2 (0.0019 in^2.).

HINT:

To calculate the square of the stripped wire harness section:

Square = 3.14 x $(Diameter)^2$ divided by 4

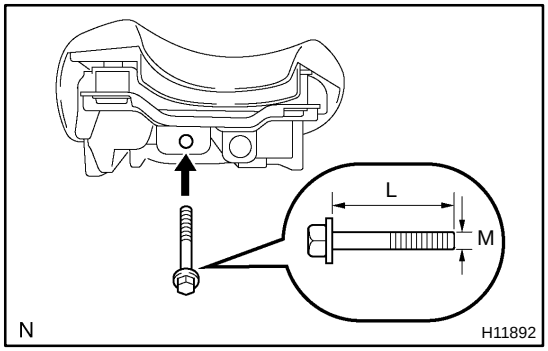

(1) Install the 2 bolts with washers in the 2 bolt holes in the steering wheel pad.

Bolt:

L: 35. mm (1.387 in.)

M: 6.0 mm (0.236 in.)

Pitch: 1.0 mm (0.039 in.)

NOTICE:

- **Tighten the bolts by hand until the bolts become difficult to turn.**
- **Do not tighten the bolts too much.**

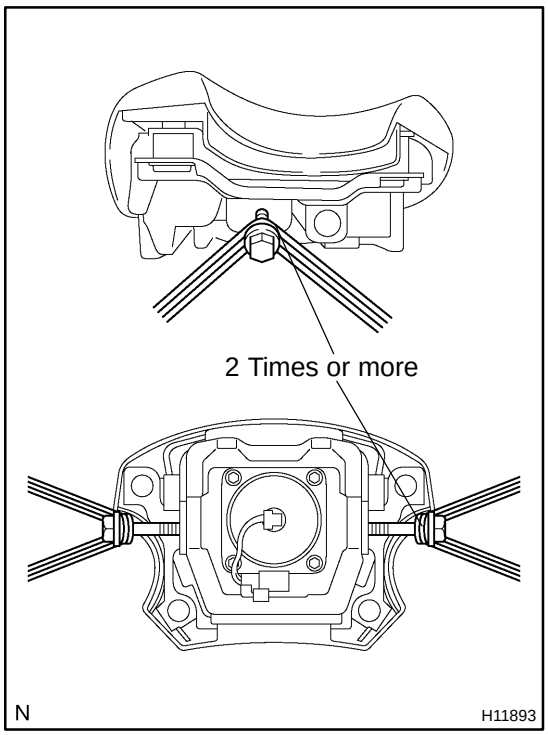

(2) Using 3 wire harness, wind the wire harness at least 2 times each around the bolts installed on the left and right sides of the steering wheel pad.

CAUTION:

- **Tightly wind the wire harness around the bolts so that there is no slack.**
- **If there is slackness in the wire harness, the steering wheel pad may come loose due to the shock when the airbag is deployed. This is highly dangerous.**

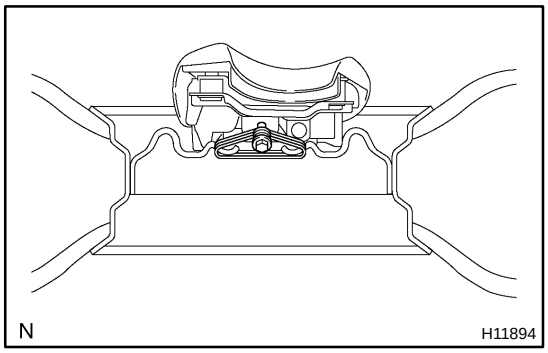

(3) Face the upper surface of the steering wheel pad upward. Separately tie the left and right sides of the steering wheel pad to the disc wheel through the hub nut holes. Position the steering wheel pad connector so that it hangs downward through a hub hole in the disc wheel.

CAUTION:

- **Make sure that the wire harness is tight. It is very dangerous when looseness in the wire harness results in the steering wheel pad coming free due to the shock from the airbag deploying.**
- **Always tie down the steering wheel pad with the pad side facing upward. It is very dangerous if the steering wheel pad is tied down with the metal surface facing upward as the wire harness will be cut by the shock from the airbag deploying and the steering wheel pad will be thrown into the air.**

NOTICE:

The disc wheel will be marked by airbag deployment, so when disposing of the airbag use a redundant disc wheel.

(d) Check functioning of the SST (See step 1-(a)).
SST 09082-00700

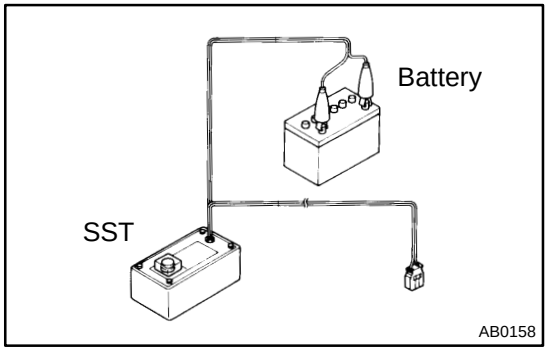

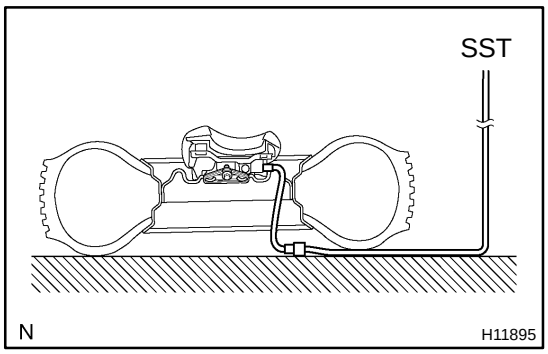

(e) Install the SST.

CAUTION:

Place the disc wheel on the level ground.

(1) Connect the connector of the SST to the steering wheel pad connector.

SST 09082-00700, 09082-00760

NOTICE:

To avoid damaging the SST connector and wire harness, do not lock the secondary lock of the twin lock. Also, secure some slack for the SST wire harness inside the disc wheel.

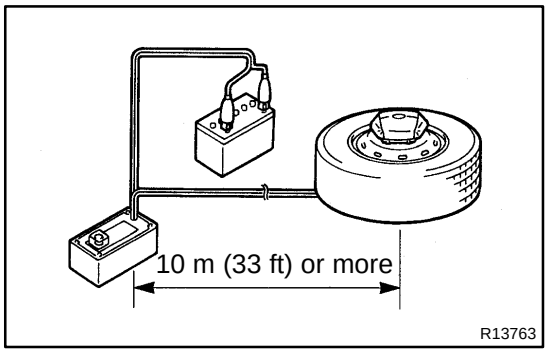

(2) Move the SST to at least 10 m (33 ft) away from the steering wheel pad tied down on the disc wheel.

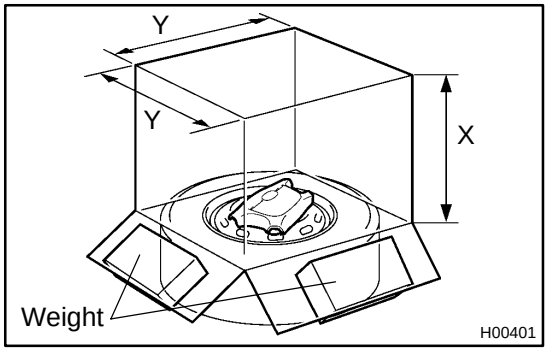

(f) Cover the steering wheel pad with a cardboard box or tires.

- Covering method using a cardboard box:
  Cover the steering wheel pad with the cardboard box and weight the cardboard box down in 4 places with at least 190 N (20 kg, 44 lb).

Size of cardboard box:

Must exceed the following dimensions:

X = 460 mm (18.11 in.)

Y = 650 mm (25.59 in.)

NOTICE:

- **When dimension Y of the cardboard box exceeds the diameter of the disc wheel with tire to which the steering wheel pad is tied, X should be the following size.**
  X = 460 mm (18.11 in.) + width of tire
- **If a cardboard box smaller than the specified size is used, the cardboard box will be broken by the shock from the airbag deployment.**

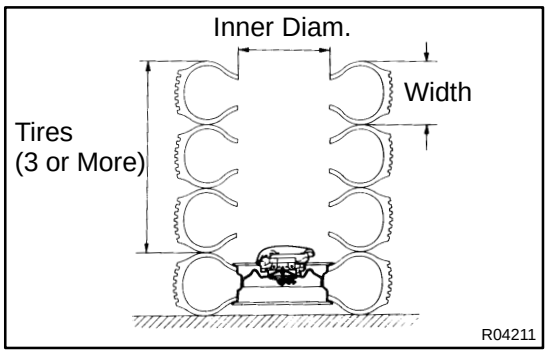

- Covering method using tires:
  Place at least 3 tires without disc wheel on top of the disc wheel with tire to which the steering wheel pad is tied.

Tire size: Must exceed the following dimensions-
Width: 185 mm (7.87 in.)
Inner diameter: 360 mm (14.17 in.)

CAUTION:
Do not use tires with disc wheels.

NOTICE:
The tires may be marked by the airbag deployment, so use the redundant tires.

(g) Deploy the airbag.
  (1) Connect the SST red clip to the battery positive (+) terminal and the black clip to the battery negative (-) terminal.

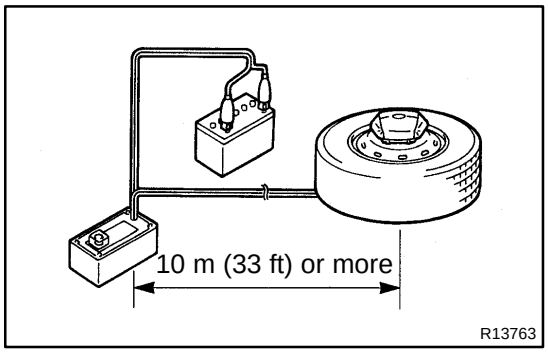

  (2) Check that no one is within 10 m (33 ft) area around the disc wheel which the steering wheel pad is tied to.
  (3) Press the SST activation switch and deploy the airbag.

HINT:
The airbag deploys simultaneously as the LED of the SST activation switch lights up.

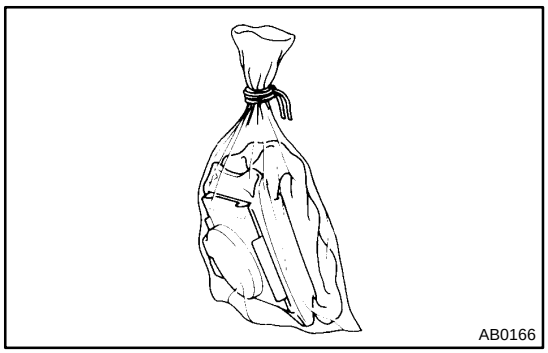

(h) Dispose of the steering wheel pad (with airbag).

CAUTION:
- **The steering wheel pad is very hot when the airbag is deployed, so leave it alone for at least 30 minutes after deployment.**
- **Use gloves and safety glasses when handling a steering wheel pad with the deployed airbag.**
- **Always wash your hands with water after completing the operation.**
- **Do not apply water, etc. to a steering wheel pad with the deployed airbag.**
  (1) Remove the steering wheel pad from the disc wheel.
  (2) Place the steering wheel pad in a vinyl bag, tie the end tightly and dispose of it in the same way as other general parts disposal.

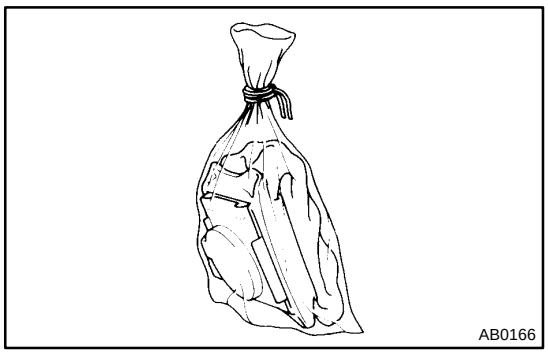

3. DEPLOYMENT WHEN DISPOSING OF STEERING WHEEL PAD WITH AIRBAG DEPLOYED IN COLLISION

Dispose of the steering wheel pad (with airbag).

CAUTION:

- **The steering wheel pad is very hot when the airbag is deployed, so leave it alone for at least 30 minutes after deployment.**
- **When moving a vehicle for scrapping which has a steering wheel pad with the deployed airbag, use gloves and safety glasses.**
- **Use gloves and safety glasses when handling a steering wheel pad with deployed airbag.**
- **Always wash your hands with water after completing the operation.**
- **Do not apply water, etc. to a steering wheel pad with deployed airbag.**

(1) Remove the steering wheel pad from the steering wheel (See page SR-12).

(2) Place the steering wheel pad in a vinyl bag, tie the end tightly and dispose of it in the same way as other general parts disposal.

RS0L4-01

INSPECTION

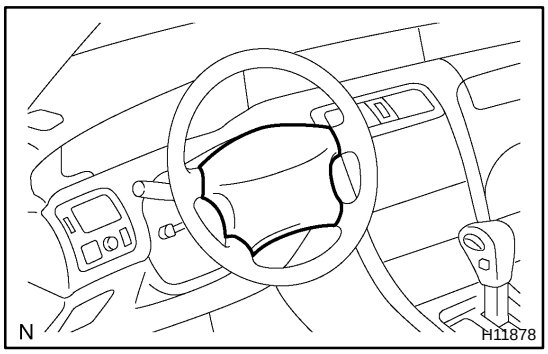

1. Vehicle not involved in collision:

INSPECT SUPPLEMENTAL RESTRAINT SYSTEM

(a) Do a diagnostic system check (See page DI-349).

(b) Do a visual check which includes the following item with the steering wheel pad (with airbag) installed in the vehicle.

Check cuts, minute cracks or marked discoloration on the steering wheel pad top surface and in the grooved portion.

2. Vehicle involved in collision and airbag is not deployed:

INSPECT SUPPLEMENTAL RESTRAINT SYSTEM

(a) Do a diagnostic system check (See page DI-349).

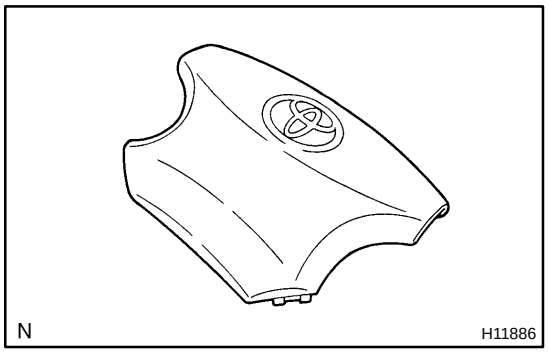

(b) Do a visual check which includes the following items with the steering wheel pad (with airbag) removed from the vehicle.

- Check cuts, minute cracks or marked discoloration on the steering wheel pad top surface and in the grooved portion.
- Check cuts and cracks in wire harness, and chipping in connectors.
- Check the deformation of the steering wheel.

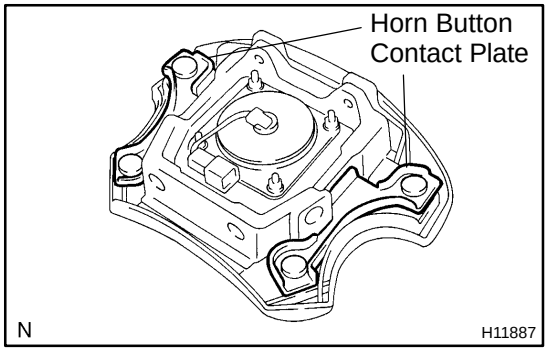

- Check the deformation of the horn button contact plate of the steering wheel pad.

HINT:

- If the horn button contact plate of the steering wheel pad is deformed, never repair it. Always replace the steering wheel pad with a new one.

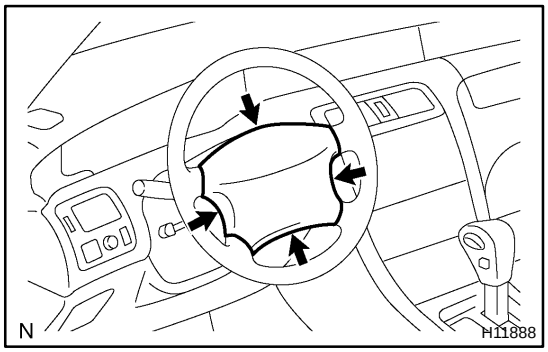

- There should be no interference between the steering wheel pad and steering wheel, and the clearance should be uniform all the way around when the new steering wheel pad is installed on the steering wheel.

CAUTION:

For removal and installation of the steering wheel pad, see page SR-12 and SR-22 , be sure to follow the correct procedure.

3. Vehicle involved in collision and airbag is deployed: INSPECT SUPPLEMENTAL RESTRAINT SYSTEM

(a) Do a diagnostic system check (See page DI-349).

(b) Do a visual check which includes the following items with the steering wheel pad (with airbag) removed from the vehicle.

- Check the deformation of the steering wheel.
- Check the damage on the spiral cable connector and wire harness.

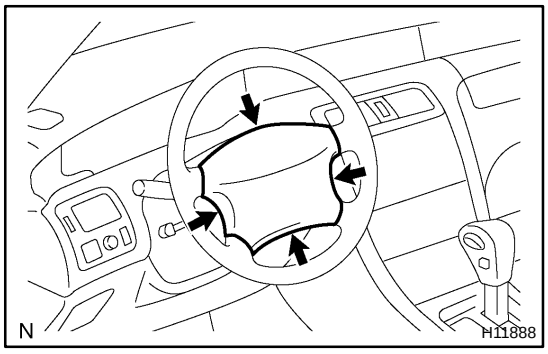

HINT:

There should be no interference between the steering wheel pad and steering wheel, and the clearance should be uniform all the way around when the new steering wheel pad is installed on the steering wheel.

CAUTION:

For removal and installation of the steering wheel pad, see page SR-12 and SR-22 , and be sure to follow the correct procedure.

RS013-23

INSTALLATION

HINT:

For step 1 to 4, refer to page SR-22 .

1. **INSTALL SPIRAL CABLE**
2. **INSTALL UPPER AND LOWER COLUMN COVERS**
3. **INSTALL STEERING WHEEL**
4. **INSTALL STEERING WHEEL PAD**

RS00Z-22

REMOVAL

HINT:

For step 1 to 4, refer to page SR-12 .

1. **REMOVE STEERING WHEEL PAD**
2. **REMOVE STEERING WHEEL**
3. **REMOVE UPPER AND LOWER COLUMN COVERS**
4. **REMOVE SPIRAL CABLE**

RS012-28

REPLACEMENT

REPLACEMENT REQUIREMENTS

In the following cases, replace the steering wheel pad, steering wheel or spiral cable.

Case	Replacing part
If the airbag has been deployed.	Steering wheel pad
If the steering wheel pad has been found to be faulty in troubleshooting.	Steering wheel pad
If the spiral cable has been found to be faulty in troubleshooting.	Spiral cable
If the steering wheel pad has been found to be faulty during checking items (See page RS-15).	Steering wheel pad
If the steering wheel has been found to be faulty during checking items (See page RS-15).	Steering wheel
If the spiral cable has been found to be faulty during checking items (See page RS-15).	Spiral cable
If the steering wheel pad has been dropped.	Steering wheel pad

CAUTION:

For removal and installation of the steering wheel pad, see page SR-12 and SR-22 . Be sure to follow the correct procedure.

RS06I-07

INSPECTION

HINT:

The SRS wire harness is integrated with the instrument panel wire harness assembly. All the connectors in the system are a standard yellow color.

1. VEHICLES NOT INVOLVED IN COLLISION

Do a diagnostic system check (See page DI-349).

2. VEHICLES INVOLVED IN COLLISION

(a) Do a diagnostic system check (See page DI-349).

(b) Check breaks in all wires of the SRS wire harness, and exposed conductors.

(c) Check to see if the SRS wire harness connectors are cracked or chipped.

WIRE HARNESS AND CONNECTOR

RS06H-10

LOCATION

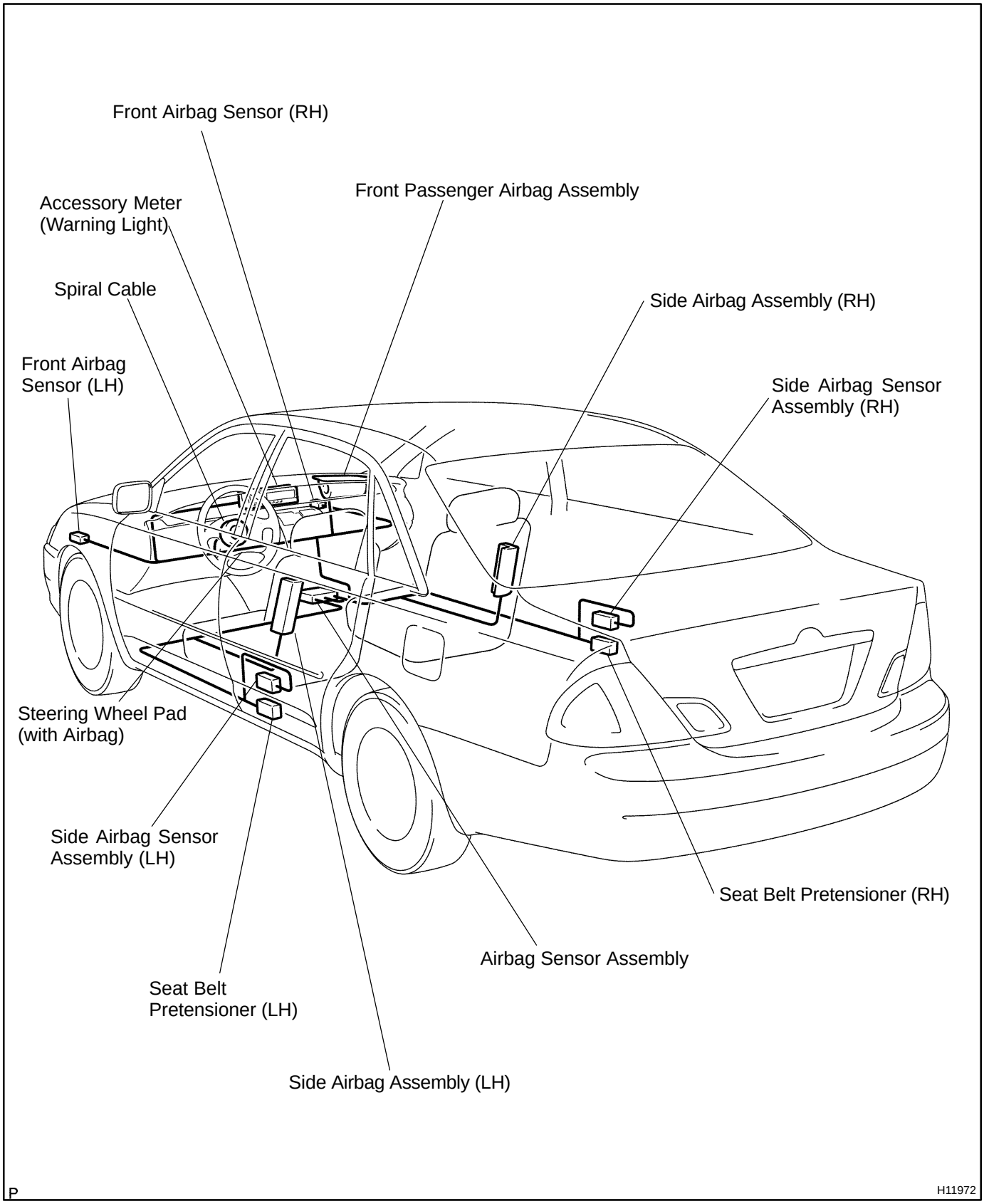

RS06J-07

REPLACEMENT

In the following cases,replace the wire harness or connector.

- If any part of the SRS wire harness or any connector has been found to be faulty in troubleshooting.
- If any part of the SRS wire harness or any connector has been found to be faulty during checking items (See page RS-83).

CAUTION:

If the wire harness used in the SRS is damaged, replace the whole wire harness assembly.

STARTER

COMPONENTS

ST04N-03

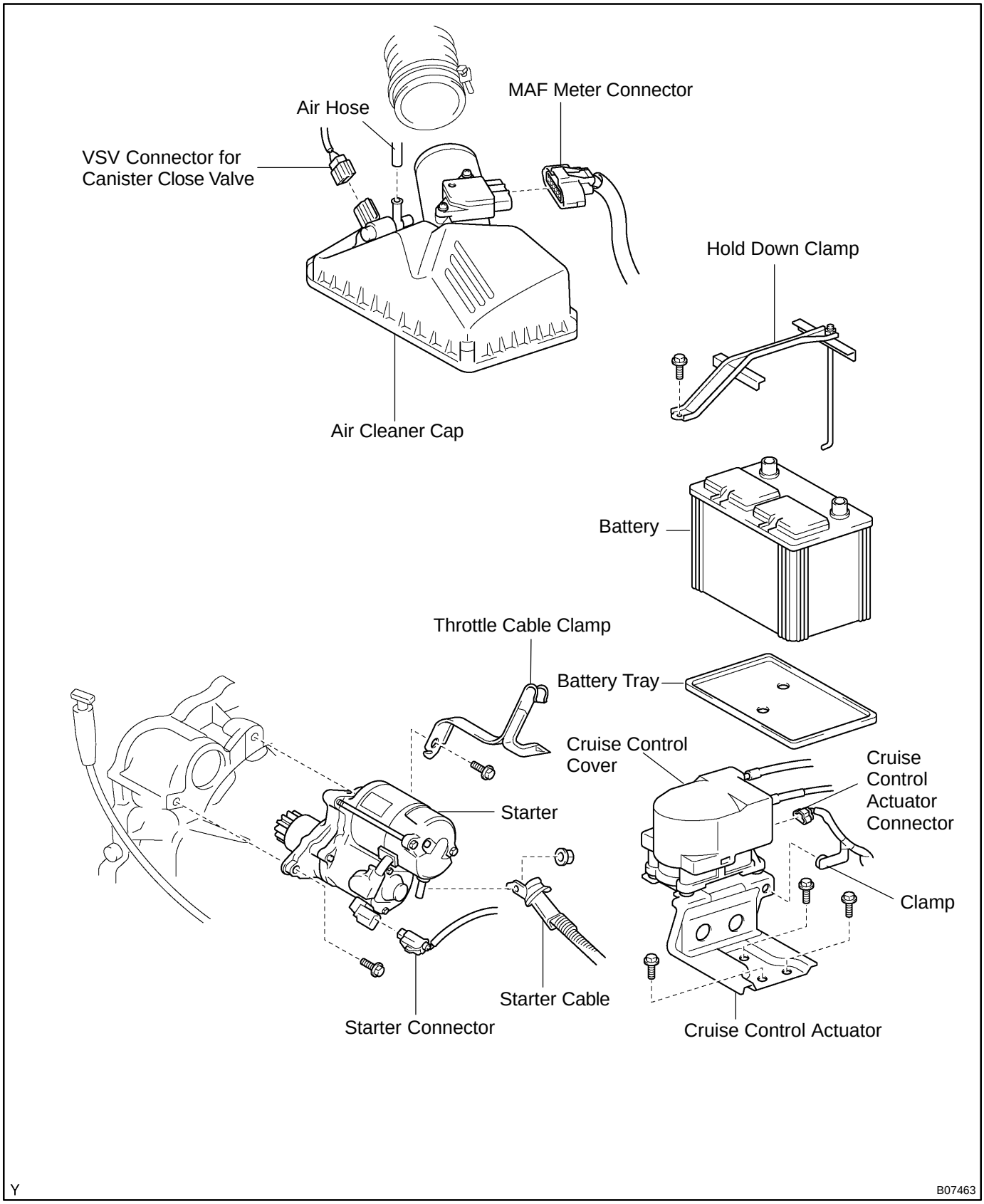

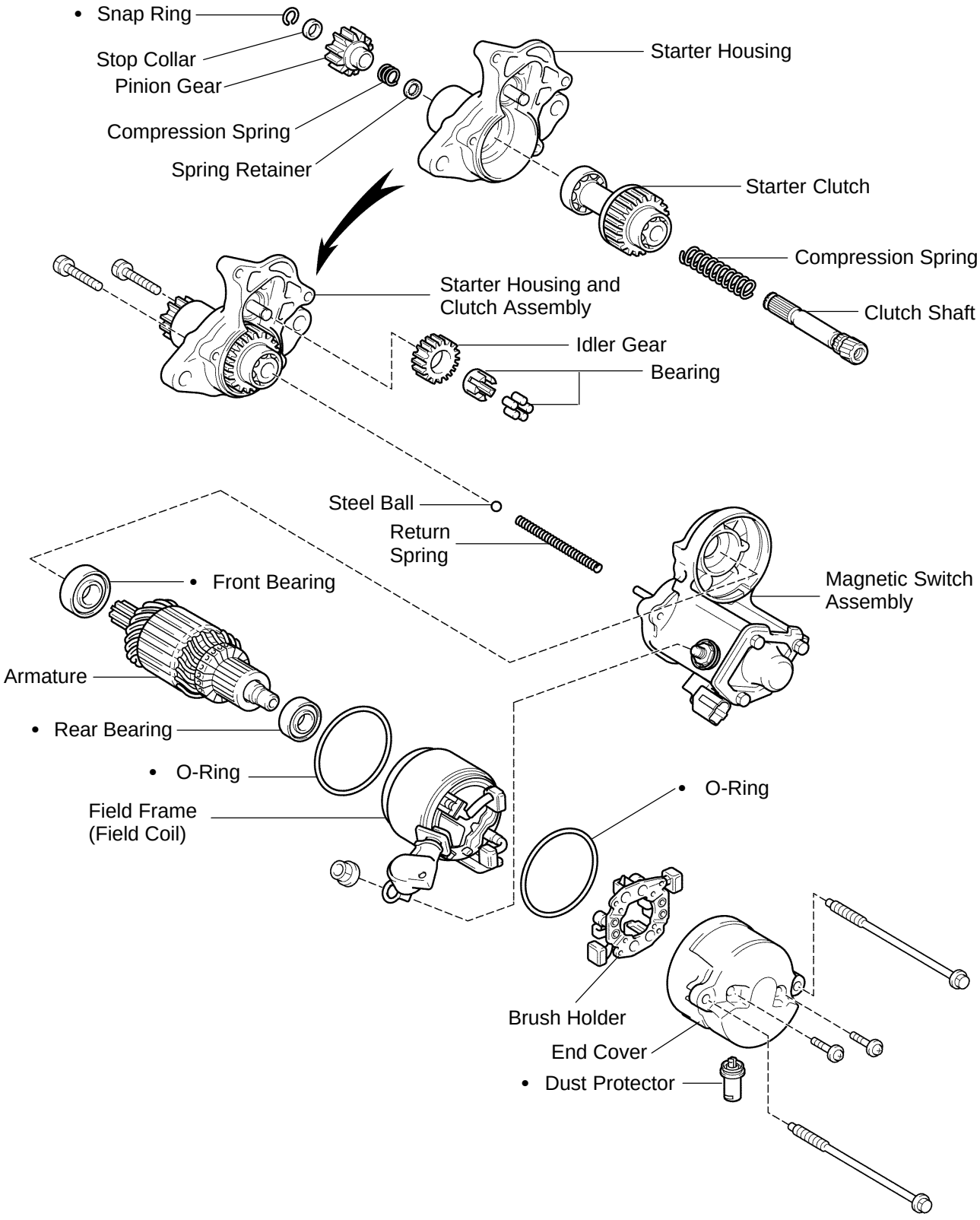

• Non-reusable part

B01154

Magnetic Switch Assembly

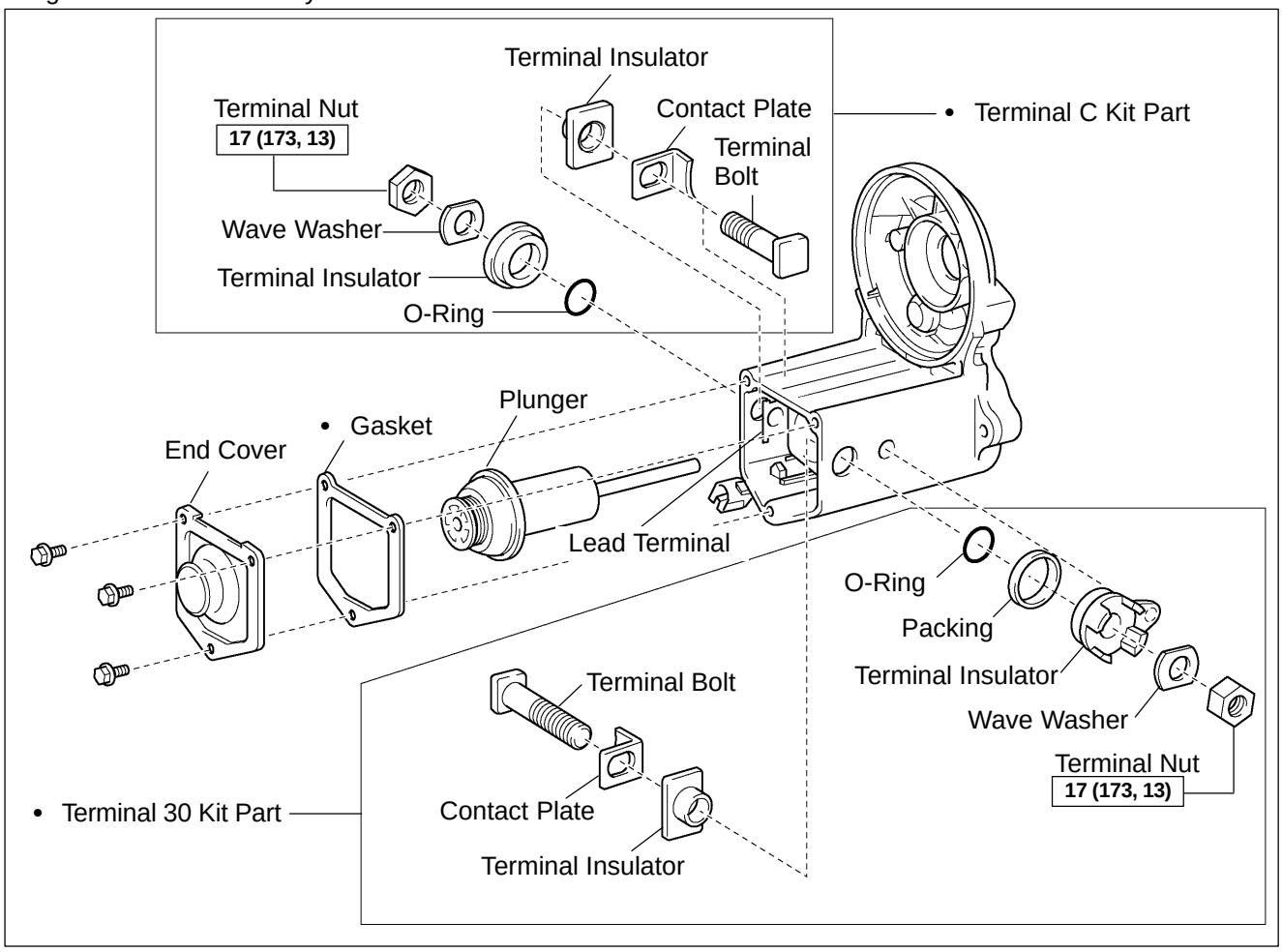

N·m (kgf·cm, ft·lbf) : Specified torque

Y • Non-reusable part

B06429

ST04P-02

DISASSEMBLY

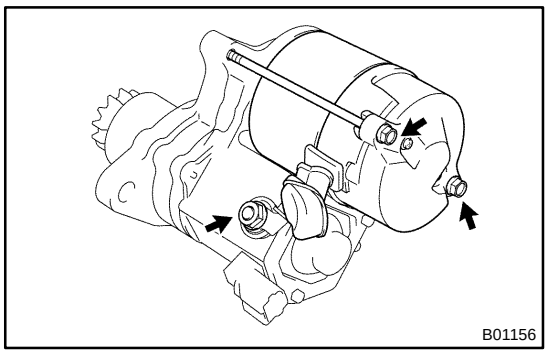

1. REMOVE DUST PROTECTOR

2. REMOVE FIELD FRAME AND ARMATURE

(a) Remove the nut, and disconnect the lead wire from the magnetic switch terminal.
Torque: 5.9 N·m (60 kgf·cm, 52 in.·lbf)

(b) Remove the 2 through bolts.
Torque: 5.9 N·m (60 kgf·cm, 52 in.·lbf)

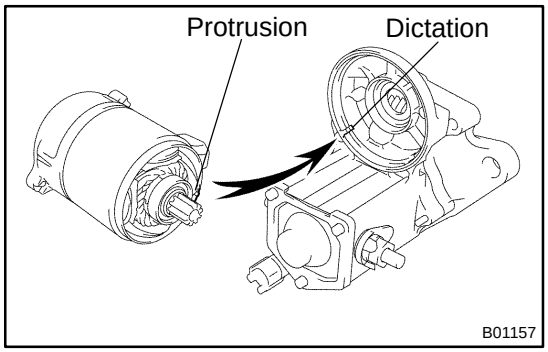

(c) Pull out the field frame together with the armature.

HINT:

Align the protrusion of the field frame with the identation of the magnetic switch.

(d) Remove the O-ring from the field frame.

HINT:

At the time of installation, please refer to the following items. Use a new O-ring.

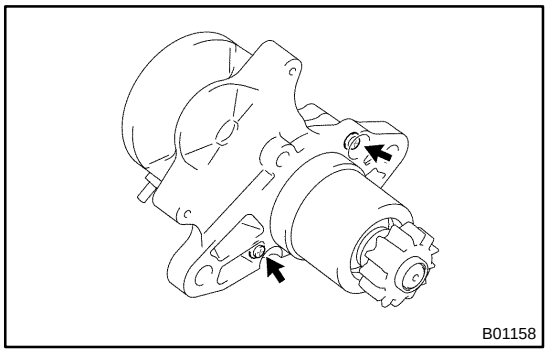

3. REMOVE STARTER HOUSING, CLUTCH ASSEMBLY AND GEAR

(a) Remove the 2 screws.
Torque: 5.9 N·m (60 kgf·cm, 52 in.·lbf)

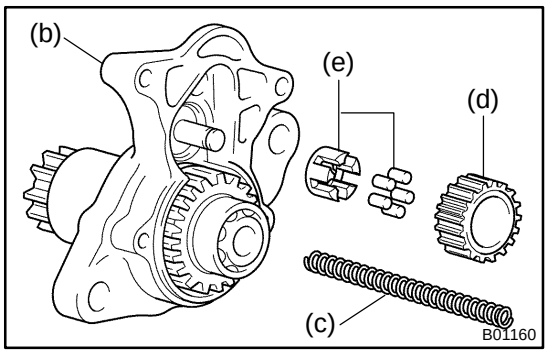

(b) Remove the starter housing and clutch assembly.

(c) Remove the return spring.

(d) Remove the idler gear.

(e) Remove the bearing.

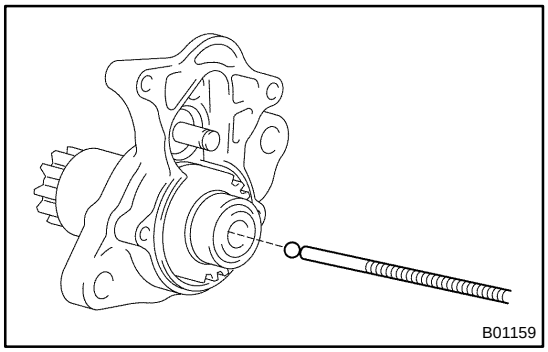

4. REMOVE STEEL BALL

Using a magnetic finger, remove the steel ball from the clutch shaft hole.

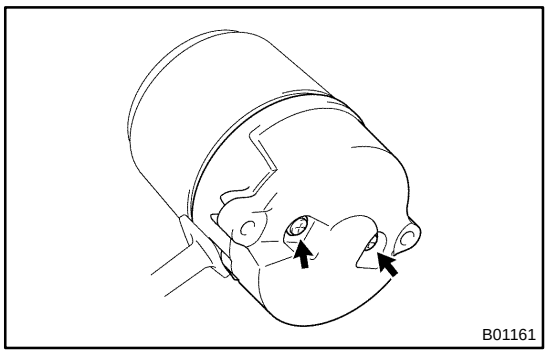

5. REMOVE BRUSH HOLDER

(a) Remove the 2 screws and end cover from the field frame.
Torque: 1.5 N·m (15 kgf·cm, 13 in.·lbf)

(b) Remove the O-ring from the field frame.

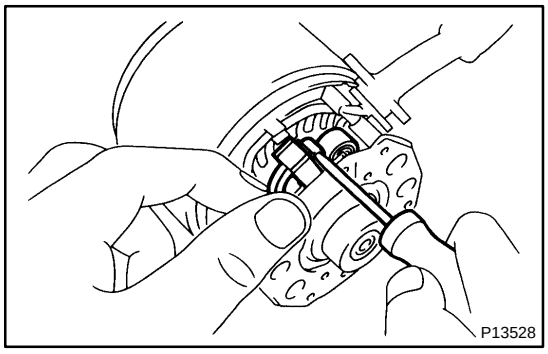

(c) Using a screwdriver, hold the spring back and disconnect the brush from the brush holder.

Disconnect the 4 brushes, and remove the brush holder.

NOTICE:

Check that the positive (+) lead wires are not grounded.

6. REMOVE ARMATURE FROM FIELD FRAME

ST04Q-02

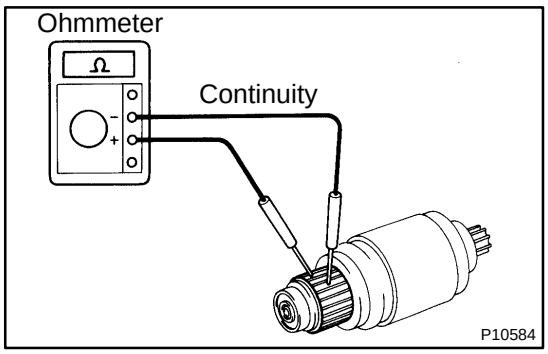

INSPECTION

1. INSPECT ARMATURE COIL

(a) Check the commutator for open circuit.

Using an ohmmeter, check that there is continuity between the segments of the commutator.

If there is no continuity between any segment, replace the armature.

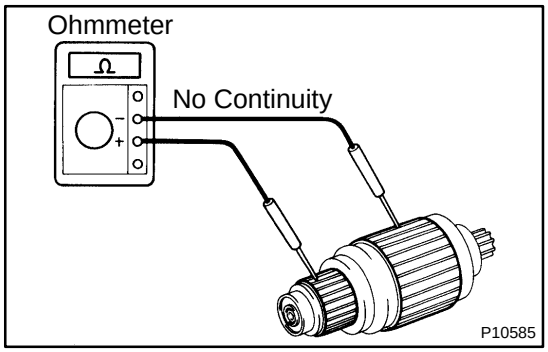

(b) Check the commutator for ground

Using an ohmmeter, check that there is no continuity between the commutator and armature coil core.

If there is continuity, replace the armature.

2. INSPECT COMMUTATOR

(a) Check the commutator for dirty and burnt surfaces.

If the surface is dirty or burnt, correct it with sandpaper (No.400) or on a lathe.

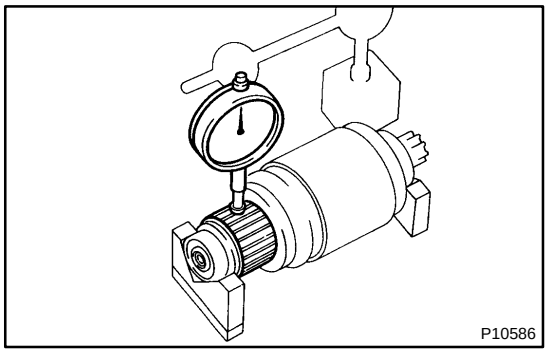

(b) Check the commutator circle runout.

(1) Place the commutator on V-blocks.

(2) Using a dial gauge, measure the circle runout.

Maximum circle runout: 0.05 mm (0.0020 in.)

If the circle runout is greater than maximum, correct it on a lathe.

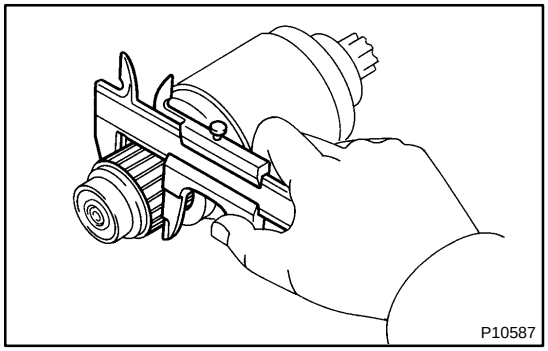

(c) Using vernier calipers, measure the commutator diameter.

Standard diameter: 30.0 mm (1.181 in.)

Minimum diameter: 29.0 mm (1.142 in.)

If the diameter is less than minimum, replace the armature.

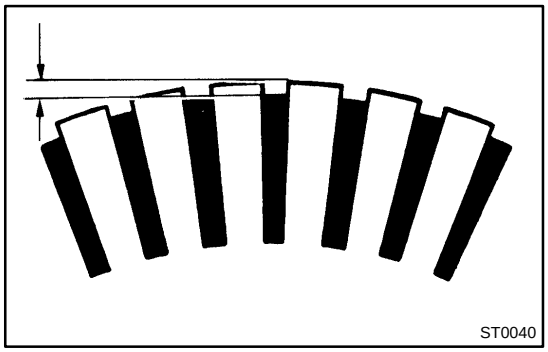

(d) Check that the undercut depth is clean and free of foreign materials. Smooth out the edge.

Standard undercut depth: 0.6 mm (0.024 in.)

Minimum undercut depth: 0.2 mm (0.008 in.)

If the undercut depth is less than minimum, correct it with a hacksaw blade.

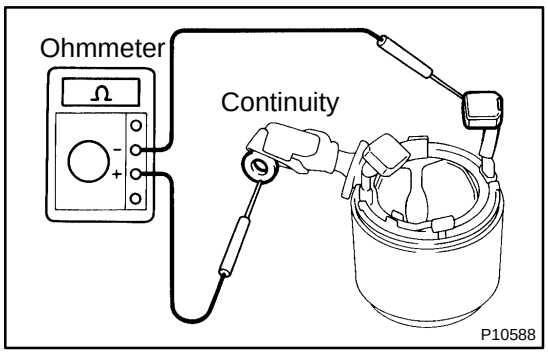

3. INSPECT FIELD COIL

(a) Check the field coil for open circuit.

Using an ohmmeter, check that there is continuity between the lead wire and field coil brush lead.

If there is no continuity, replace the field frame.

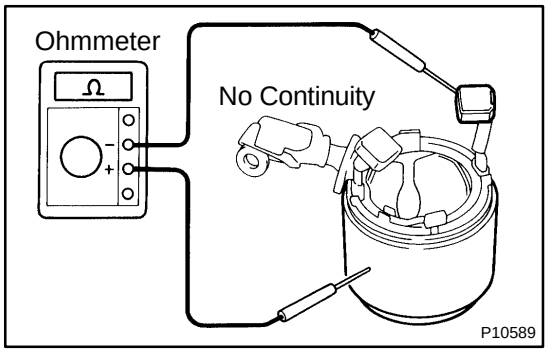

(b) Check the field coil for ground.

Using an ohmmeter, check that there is no continuity between the field coil end and field frame.

If there is continuity, repair or replace the field frame.

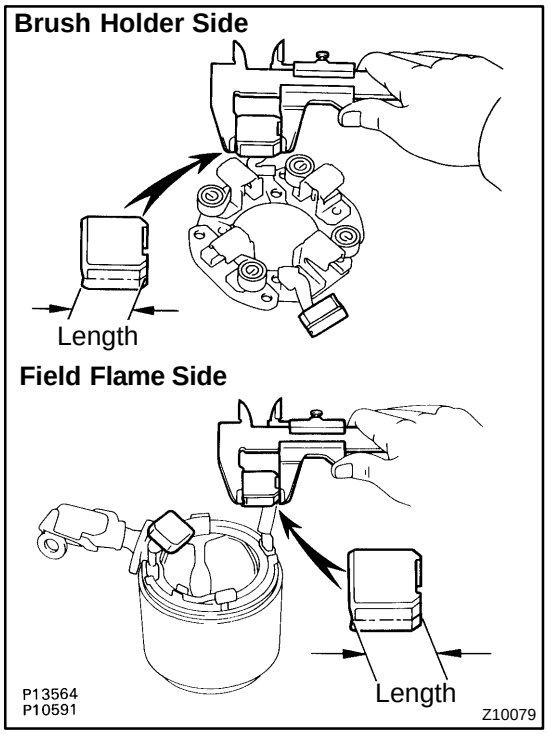

4. INSPECT BRUSHES

Using vernier calipers, measure the brush length.

Standard length: 15.5 mm (0.610 in.)

Minimum length: 10 mm (0.394 in.)

If the length is less than minimum, replace the brush holder and field frame.

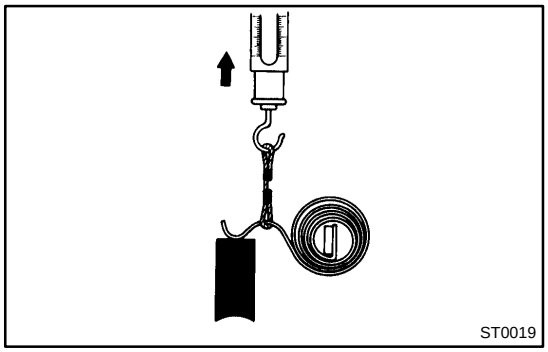

5. INSPECT BRUSH SPRINGS

Check the brush spring road.

Take the pull scale reading the instant the brush spring separates from the brush.

Standard spring installed load:

17.6 - 23.5 N (1.79 - 2.41 kgf, 4.0 - 5.3 lbf)

Minimum spring installed load:

11.8 N (1.20 kgf, 2.7 lbf)

If the installed load is less than minimum replace the brush springs.

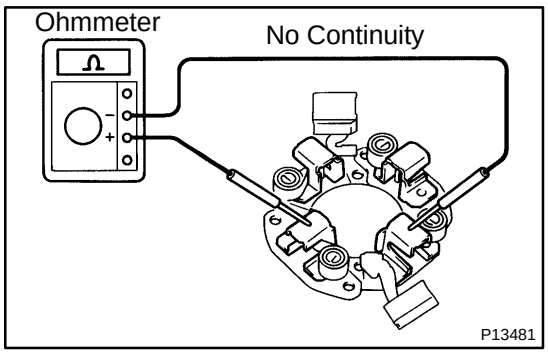

6. INSPECT BRUSH HOLDER

Check the brush holder insulation.

Using an ohmmeter, check that there is no continuity between the positive (+) and negative (-) brush holders.

If there is continuity, repair or replace the brush holder.

7. INSPECT CLUTCH AND GEAR

(a) Check the gear teeth on the pinion gear, idler gear and clutch assembly for wear or damage.

If damaged, replace the gear or clutch assembly.

If damaged, also check the drive plate ring gear for wear or damage.

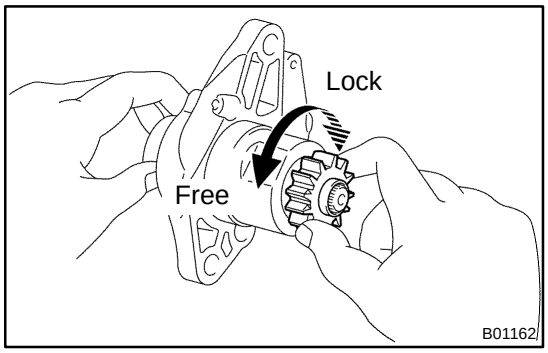

(b) Check the clutch pinion gear.

Hold the starter clutch and rotate the pinion gear counterclockwise, and check that it turns freely. Try to rotate the pinion gear clockwise and check that it locks.

If necessary, replace the clutch assembly.

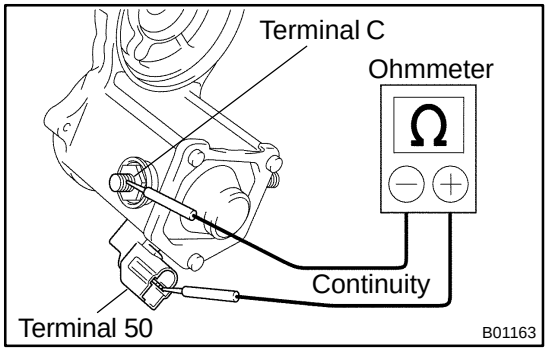

8. INSPECT MAGNETIC SWITCH

(a) Check the pull-in coil for open circuit.

Using an ohmmeter, check that there is continuity between terminals 50 and C.

If there is no continuity, check and replace the magnetic switch.

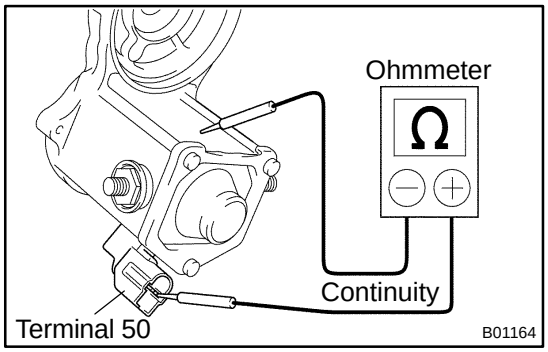

(b) Check the hold-in coil open circuit.

Using an ohmmeter, check that there is continuity between terminal 50 and the switch body.

If there is no continuity, replace the magnetic switch.

9. INSPECT BEARING

Turn the bearing by hand while applying inward force.

If resistance is felt or the bearing sticks, replace the bearing (See page ST-1 1).

ST04U-01

INSTALLATION

Installation is in the reverse order of removal (See page ST-5).

ST04S-01

REASSEMBLY

Reassembly is in the reverse order of disassembly (See page ST-6).

HINT:

Use high temperature grease to lubricate the bearings, springs, steel ball and gears when assembling the starter.

ST04O-02

REMOVAL

1. REMOVE AIR CLEANER CAP

2. REMOVE BATTERY AND TRAY

3. REMOVE CRUISE CONTROL ACTUATOR

(a) Disconnect the actuator connector and clamp.

(b) Remove the 3 bolts, and disconnect the actuator with the bracket.

4. REMOVE STARTER

(a) Disconnect the starter connector.

(b) Remove the nut, and disconnect the starter cable.

(c) Remove the 2 bolts, throttle cable clamp and starter.

Torque: 39 N·m (400 kgf·cm, 29 ft·lbf)

ST04R-03

REPLACEMENT

1. REPLACE CLUTCH ASSEMBLY

(a) Disassemble the starter housing and the clutch assembly.

(1) Mount a brass bar in a vice, and install the starter housing and clutch assembly to the brass bar.

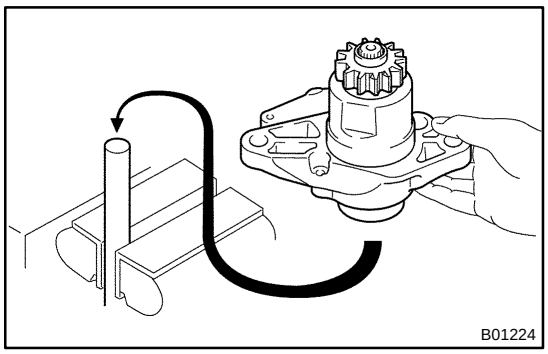

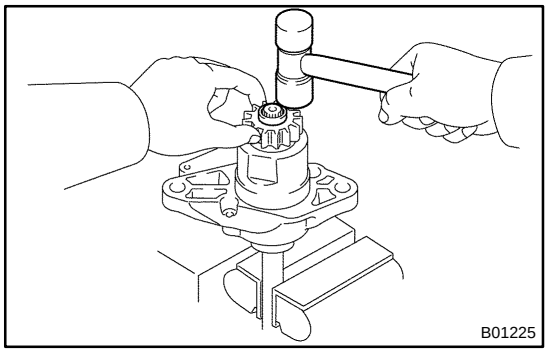

(2) Push down the pinion gear.

(3) Using a plastic-faced hammer, tap down the stop collar.

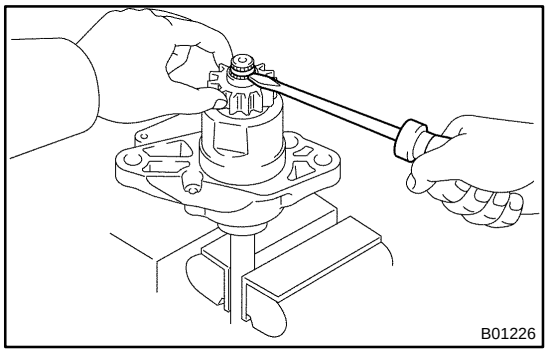

(4) Using a screwdriver, pry out the snap ring.

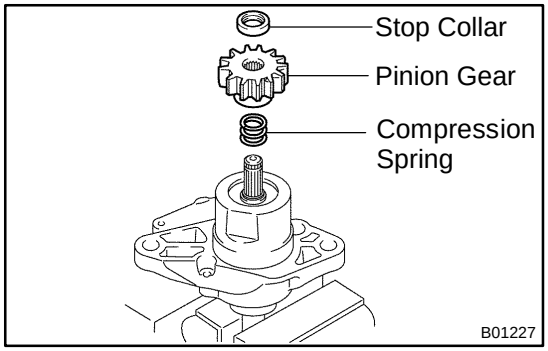

(5) Remove the stop collar, pinion gear and compression spring.

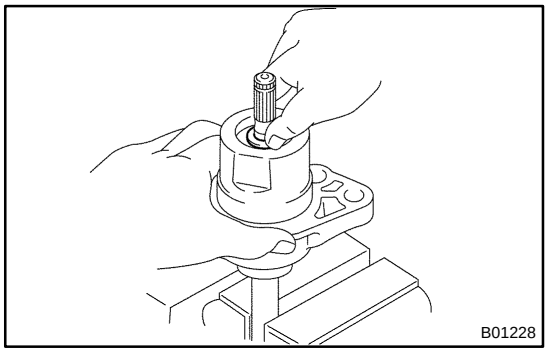

(6) Push down the starter housing, and remove the spring retainer.

(7) Remove the starter clutch from the starter housing.

(8) Remove the clutch shaft and compression spring from the starter clutch.

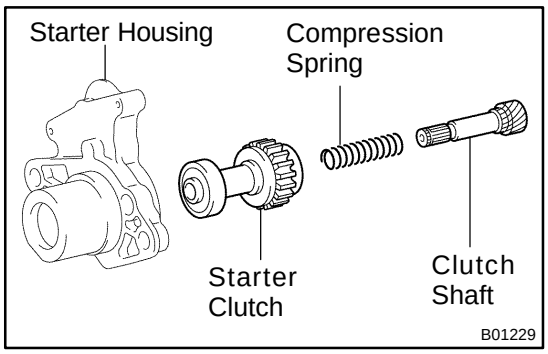

(b) Assemble the starter housing and the clutch assembly.
(1) Install the compression spring and clutch shaft to the starter clutch.
(2) Install the starter clutch to the starter housing.

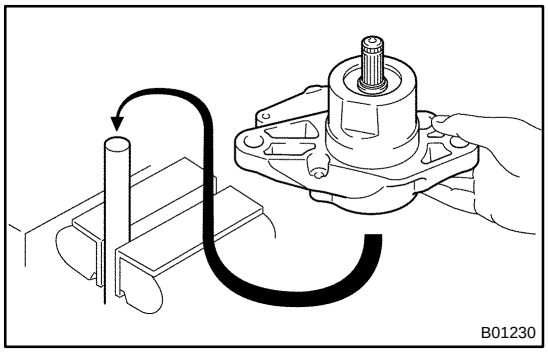

(3) Mount a brass bar in a vice, install the starter housing and clutch assembly to the brass bar.

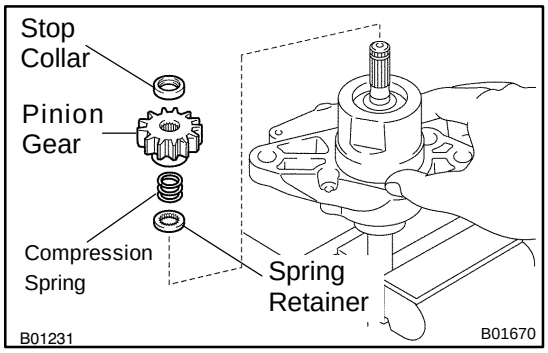

(4) Push down the starter housing, and install the spring retainer, compression spring, pinion gear and stop collar.

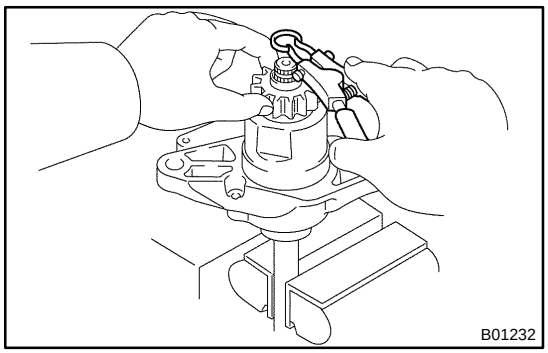

(5) Push down the pinion gear.
(6) Using snap ring pliers, install a new snap ring.

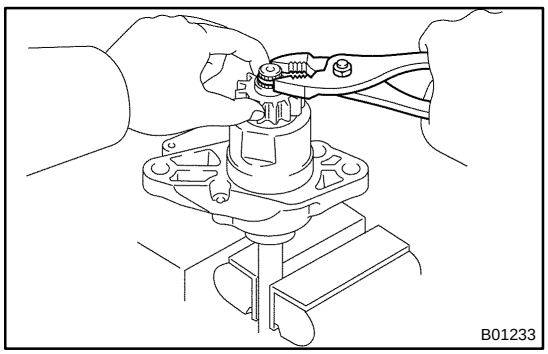

(7) Using pliers, compress the snap ring.
(8) Check that the snap ring fits correctly.

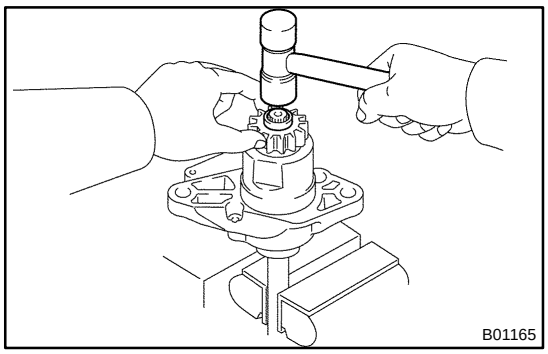

(9) Remove the starter housing and clutch assembly from the brass bar.
(10) Using a plastic-faced hammer, tap the clutch shaft and install the stop collar onto the snap ring.

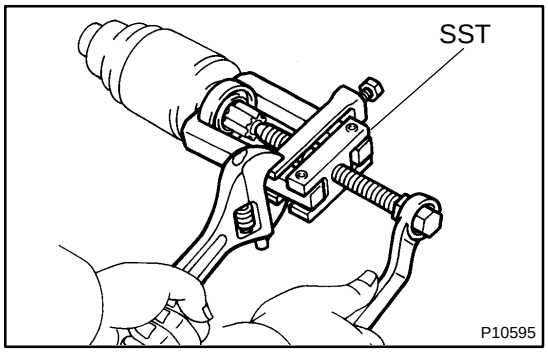

2. REPLACE FRONT BEARING

(a) Using SST, remove the bearing.
SST 09286-4601 1

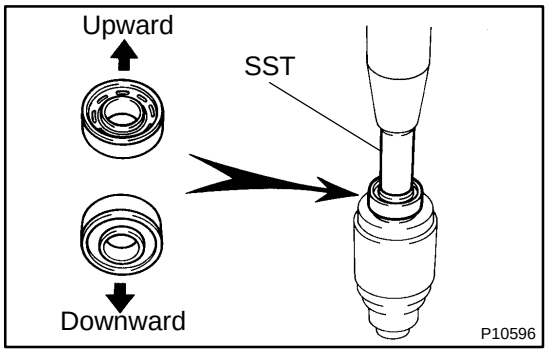

(b) Using SST and a press, press in a new bearing.

NOTICE:

Be careful of the bearing installation direction.

SST 09820-00030

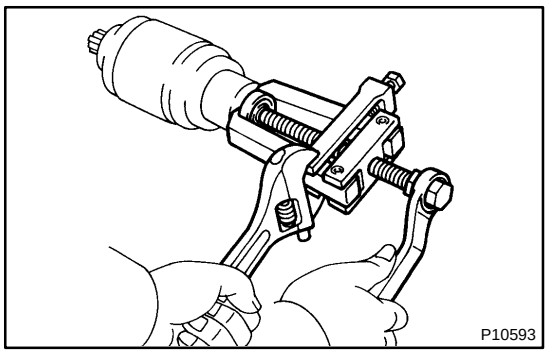

3. REPLACE REAR BEARING

(a) Using SST, remove the bearing.
SST 09286-4601 1

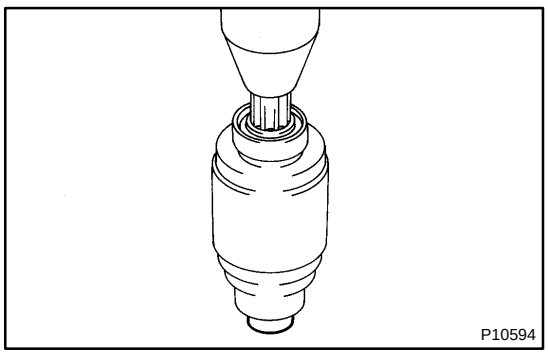

(b) Using a press, press in a new bearing.

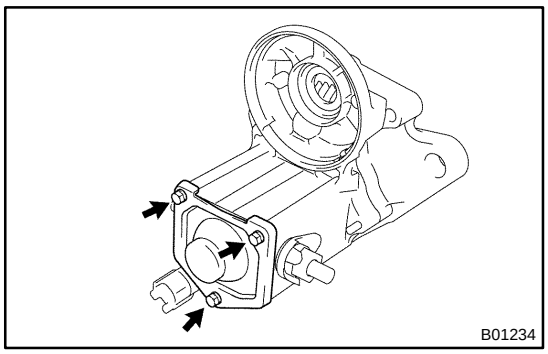

4. REPLACE MAGNETIC SWITCH TERMINAL KIT PARTS

(a) Remove the 3 bolts, end cover, gasket and plunger.

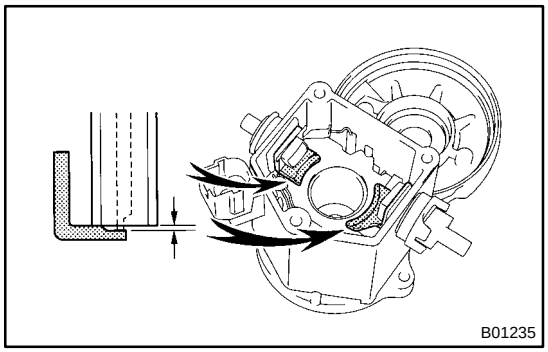

(b) Using vernier calipers, measure the contact plate for depth of wear.

Maximum wear: 0.9 mm (0.035 in.)

If the depth of wear is greater than the maximum, replace the contact plate.

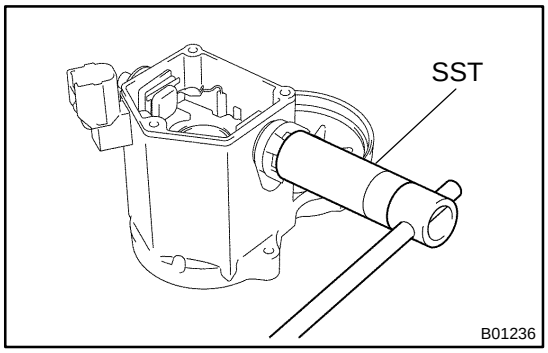

(c) Remove the terminal kit parts

(1) Using SST, loosen the terminal nuts.

SST 09810-38140

(2) Terminal C:

Remove the terminal nut, wave washer, terminal insulator (outside), O- ring, terminal bolt, contact plate and terminal insulator (inside).

(3) Terminal 30:

Remove the terminal nut, wave washer, terminal insulator (outside), packing, O-ring, terminal bolt, contact plate, terminal insulator (inside).

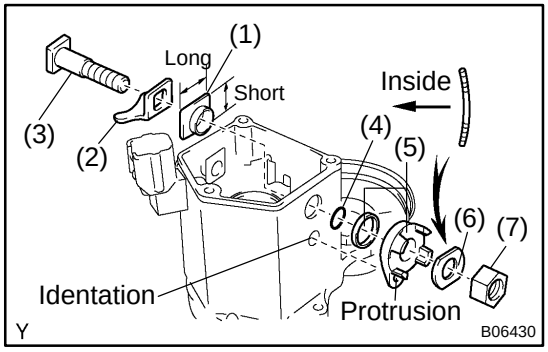

(d) Install new terminal 30 kit parts.

(1) Temporarily install a new terminal insulator (inside).

(2) Temporarily install a new contact plate.

(3) Temporarily install a new terminal bolt.

(4) Temporarily install a new O-ring.

(5) Temporarily install a new packing and a new terminal insulator (outside).

Install a new packing to a new terminal insulator, and install them.

HINT:
Match the protrusion of the insulator with the indentation of the housing.

(6) Temporarily install a new wave washer.
(7) Temporarily install a new terminal nut.

NOTICE:
Be careful to install the terminal insulators (inside) and wave washers in the correct direction.

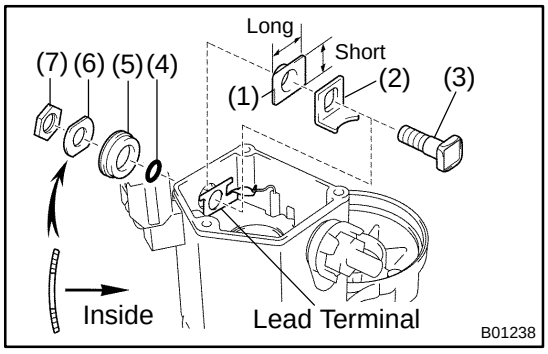

(e) Temporarily install new terminal kit parts.
(1) Temporarily install a new terminal insulator (inside).
(2) Temporarily install a new contact plate.
(3) Temporarily install a new terminal bolt.
(4) Temporarily install a new O-ring.
(5) Temporarily install a new terminal insulator (outside).
(6) Temporarily install a new wave washer.
(7) Temporarily install a new terminal nut.

NOTICE:
Be careful to install the terminal insulators (inside) and wave washers in the correct direction.

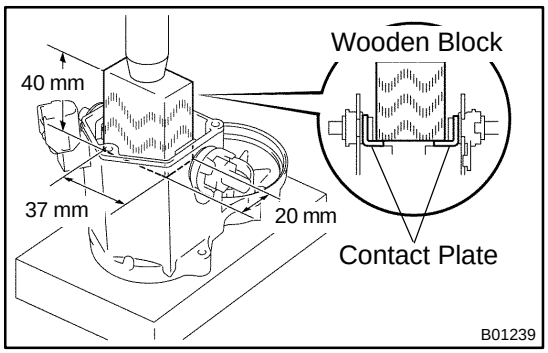

(f) Tighten terminal nuts.
(1) Put a wooden block on the contact plate and press it down with a hand press.

Dimensions of wooden block:
20 x 37 x 40 mm (0.79 x 1.46 x 1.57 in.)
Press force:
981 N (100 kgf, 221 lbf)

NOTICE:

- **Check the diameter of the hand press ram. Then calculate the gauge pressure of the press when 981 N (100 kgf, 221 lbf) of force is applied.**
  Gauge pressure:

$$(\text{kgf/cm}^2) = \frac{100\ \text{kgf}}{\left(\frac{\text{Ram diameter (cm)}}{2}\right)^2 \times 3.14\ (\pi)}$$

$$(\text{psi}) = \frac{221\ \text{lbf}}{\left(\frac{\text{Ram diameter (in.)}}{2}\right)^2 \times 3.14\ (\pi)}$$

$$(\text{kPa}) = (\text{kgf/cm}^2) \times 98.1$$

$$(\text{kPa}) = (\text{psi}) \times 6.9$$

- **If the contact plate is not pressed down with the specified pressure, the contact plate may tilt due to coil deformation or the tightening of the nut.**

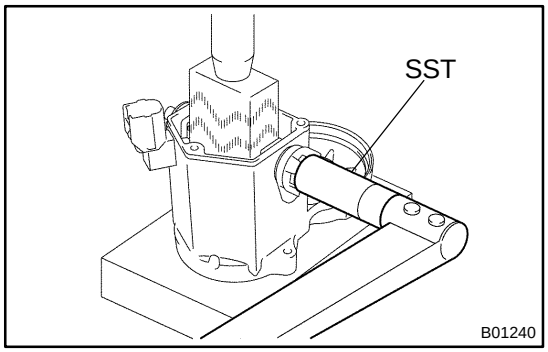

(2) Using SST, tighten the nuts to the specified torque.
SST 09810-38140
Torque: 17 N·m (173 kgf·cm, 12 ft·lbf)

NOTICE:
If the nut is over tightened, it may cause cracks on the inside of the insulator.

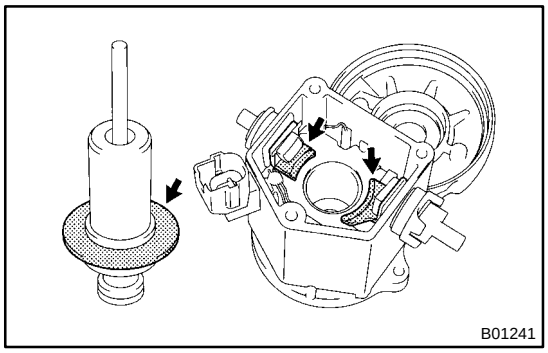

(g) Clean the contact surfaces of the remaining contact plate and plunger with a dry shop rag.
(h) Install the plunger, new gasket, end cover and 3 bolts.
Torque: 2.5 N·m (25 kgf·cm, 22 in.·lbf)

ST04T-02

TEST

NOTICE:

These tests must be done within 3 to 5 seconds to avoid burning out the coil.

1. DO PULL-IN TEST

(a) Disconnect the field coil lead wire from terminal C.

(b) Connect the battery to the magnetic switch as shown. Check that the clutch pinion gear moves outward.

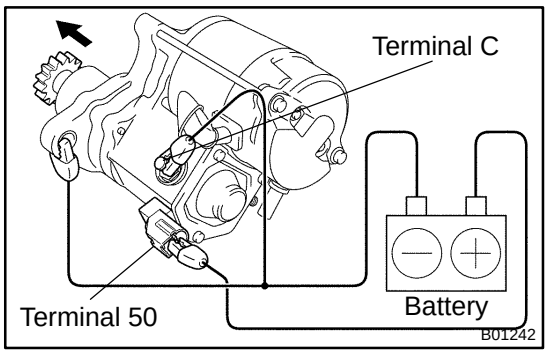

2. DO HOLD-IN TEST

With battery connected as above with the clutch pinion gear out, disconnect the negative (-) lead from terminal C. Check that the pinion gear remains out.

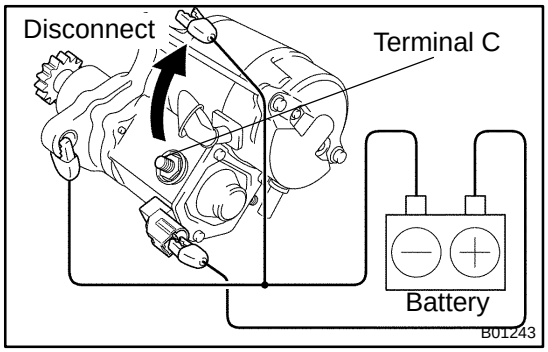

3. INSPECT CLUTCH PINION GEAR RETURN

(a) Disconnect the negative (-) lead from the switch body.

(b) Check that the clutch pinion gear returns inward.

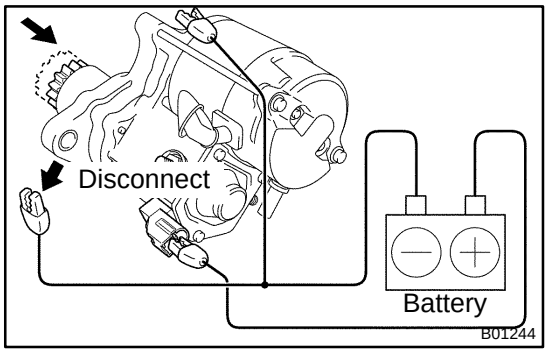

4. DO NO-LOAD PERFORMANCE TEST

(a) Connect the battery and ammeter to the starter as shown.

(b) Check that the starter rotates smoothly and steadily with the pinion gear moving out. Check that the ammeter shows the specified current.

Specified current: 90 A or less at 11.5 V

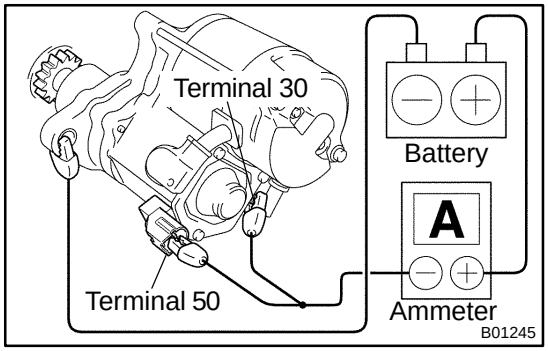

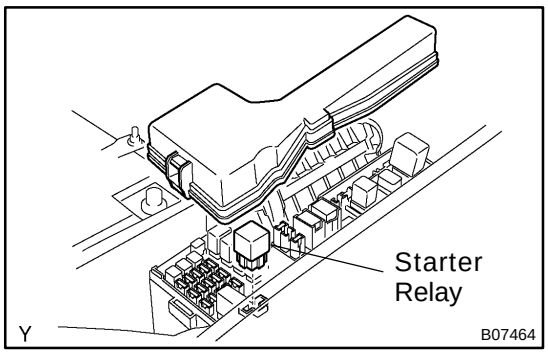

STARTER RELAY

ST04V-02

INSPECTION

1. REMOVE RELAY BOX COVER

2. REMOVE STARTER RELAY (Marking: ST)

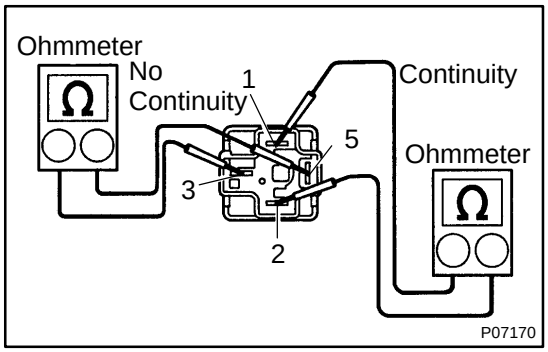

3. INSPECT STARTER RELAY

(a) Inspect the relay continuity.

(1) Using an ohmmeter, check that there is continuity between terminals 1 and 2.

If there is no continuity, replace the relay.

(2) Check that there is no continuity between terminals 3 and 5.

If there is continuity, replace the relay.

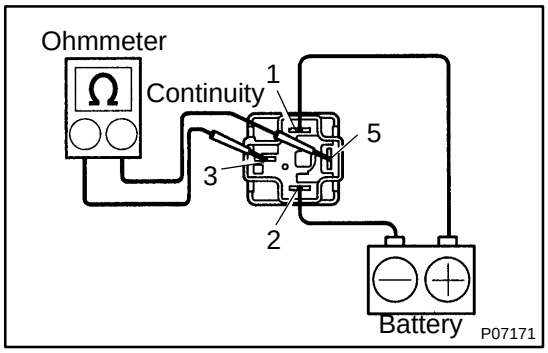

(b) Inspect the relay operation.

(1) Apply battery positive voltage across terminals 1 and 2.

(2) Using an ohmmeter, check that there is continuity between terminals 3 and 5.

If there is no continuity, replace the relay.

4. REINSTALL STARTER RELAY

5. REINSTALL RELAY BOX COVER

STARTING SYSTEM

ST04M-01

ON-VEHICLE INSPECTION

NOTICE:

Before changing the starter, check the following items again:

- **Connector connection**
- **Accessory installation, e.g.: theft deterrent system**

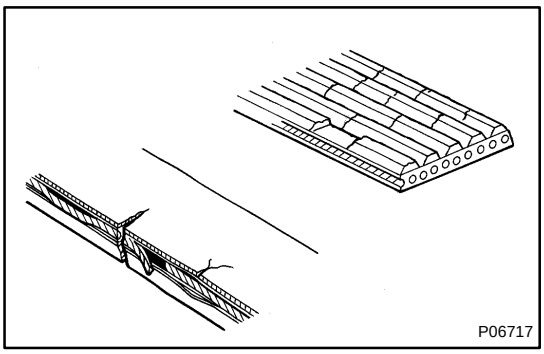

DRIVE BELT

SR0ED-03

INSPECTION

INSPECT DRIVE BELT

(a) Visually check the drive belt for excessive wear, frayed cords, etc.

If any defect has been found, replace the drive belt.

HINT:

Cracks on the rib side of a drive belt are considered acceptable. If the missing chunks from the ribs are found on the drive belt, it should be replaced.

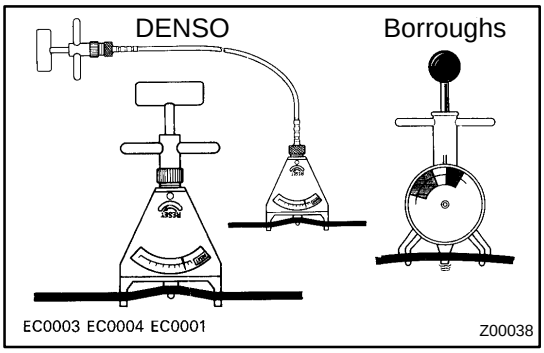

(b) Using a belt tension gauge, measure the belt tension.

Belt tension gauge:
DENSO BTG-20 (95506-00020)
Borroughs No. BT-33-73F
Drive belt tension:
New belt: 120 - 185 lbf
Used belt: 95 - 135 lbf

If the belt tension is not as specified, adjust it.

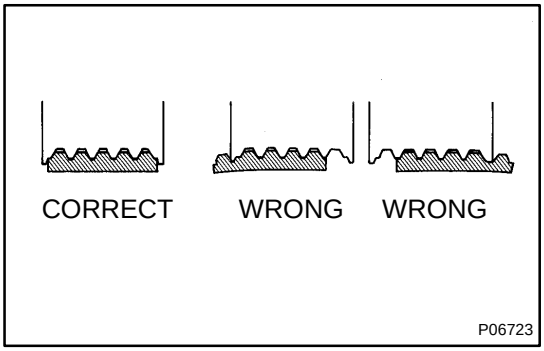

HINT:

- ★ "New belt" refers to a belt which has been used less than 5 minutes on a running engine.
- ★ "Used belt" refers to a belt which has been used on a running engine for 5 minutes or more.
- ★ After installing a belt, check that it fits properly in the ribbed grooves.
- ★ Check with your hand to confirm that the belt has not slipped out of the groove on the bottom of the pulley.
- ★ After installing a new belt, run the engine for about 5 minutes and recheck the belt tension.

POWER STEERING FLUID BLEEDING

SR0EE-03

1. CHECK FLUID LEVEL (See page SR-5)

2. JACK UP FRONT OF VEHICLE AND SUPPORT IT WITH STANDS

3. TURN STEERING WHEEL

With the engine stopped, turn the steering wheel slowly from lock to lock several times.

4. LOWER VEHICLE

5. START ENGINE

Run the engine at idle for a few minutes.

6. TURN STEERING WHEEL

(a) With the engine idling, turn the steering wheel to left or right full lock position and keep it there for 2-3 seconds, then turn the steering wheel to the opposite full lock position and keep it there for 2-3 seconds.

(b) Repeat (a) several times.

7. STOP ENGINE

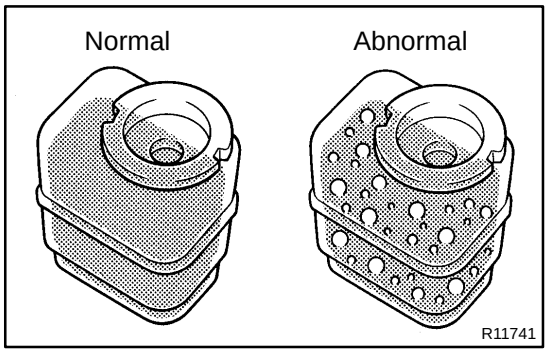

8. CHECK FOR FOAMING OR EMULSIFICATION

If the system has to be bled twice specifically because of foaming or emulsification, check for fluid leaks in the system.

9. CHECK FLUID LEVEL (See page SR-5)

SR0EF-04

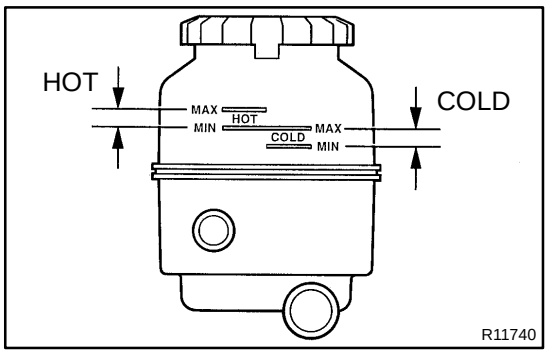

INSPECTION

1. CHECK FLUID LEVEL

(a) Keep the vehicle level.

(b) With the engine stopped, check the fluid level in the oil reservoir.

If necessary, add fluid.

Fluid: ATF DEXRON® II or III

HINT:

Check that the fluid level is within the HOT LEVEL range on the reservoir. If the fluid is cold, check that it is within the COLD LEVEL range.

(c) Start the engine and run it at idle.

(d) Turn the steering wheel from lock to lock several times to boost fluid temperature.

Fluid temperature: 80˚C (176˚F)

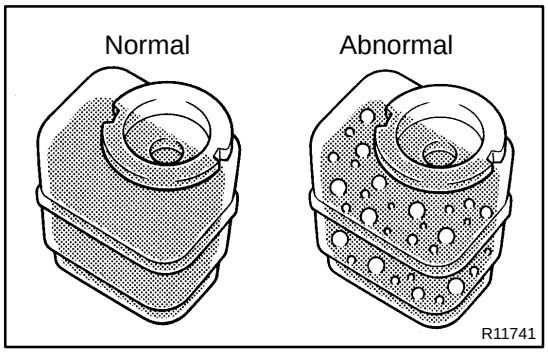

(e) Check for foaming or emulsification.

If there is foaming or emulsification, bleed power steering system (See page SR-4).

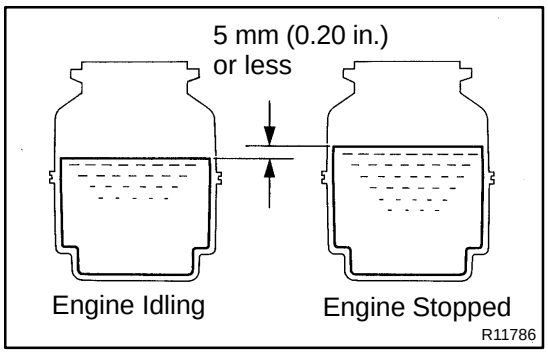

(f) With the engine idling, measure the fluid level in the oil reservoir.

(g) Stop the engine.

(h) Wait a few minutes and remeasure the fluid level in the oil reservoir.

Maximum fluid level rise: 5 mm (0.20 in.)

If a problem is found, bleed power steering system (See page SR-4).

(i) Check the fluid level.

2. CHECK STEERING FLUID PRESSURE

(a) Disconnect the pressure feed tube (See page SR-27).

(b) Connect SST to pressure feed tubes, as shown in the illustration below.

SST 09640- 10010 (09641- 01010, 09641- 01030, 09641-01060)

NOTICE:

Check that the valve of the SST is in the open position.

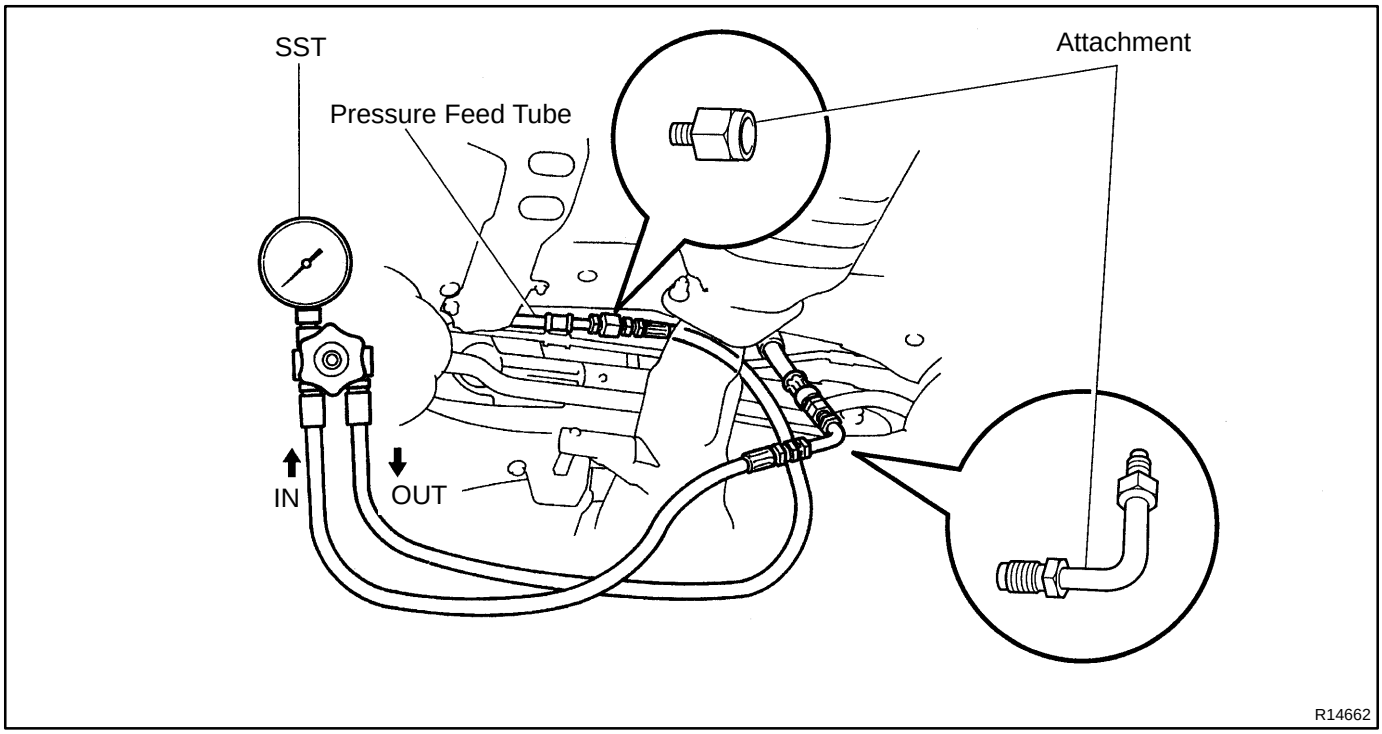

(c) Bleed the power steering system (See page SR-4).

(d) Start the engine and run it at idle.

(e) Turn the steering wheel from lock to lock several times to boost fluid temperature.

Fluid temperature: 80 ˚C (176 ˚F)

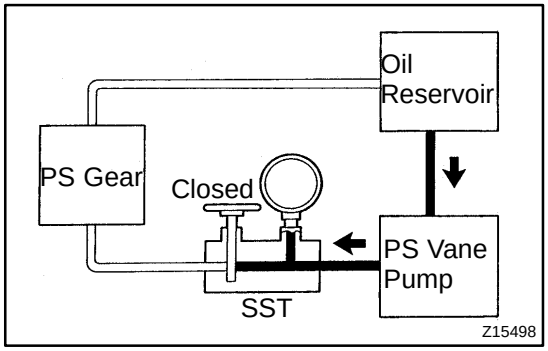

(f) With the engine idling, close the valve of the SST and observe the reading on the SST.

Minimum fluid pressure:

7,845 kPa (80 kgf/cm^2, 1,138 psi)

NOTICE:

★ **Do not keep the valve closed for more than 10 seconds.**

★ **Do not let the fluid temperature become too high.**

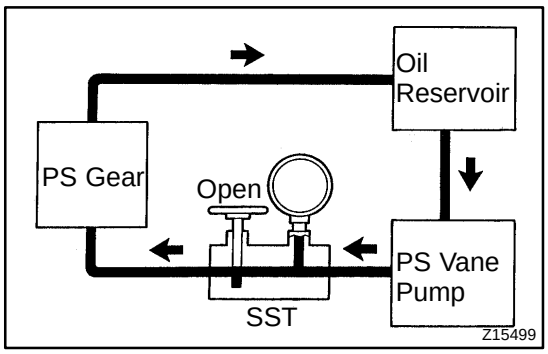

(g) With the engine idling, open the valve fully.

(h) Measure the fluid pressure at engine speeds of 1,000 rpm and 3,000 rpm.

Difference fluid pressure:

490 kPa (5 kgf/cm^2, 71 psi) or less

NOTICE:

Do not turn the steering wheel.

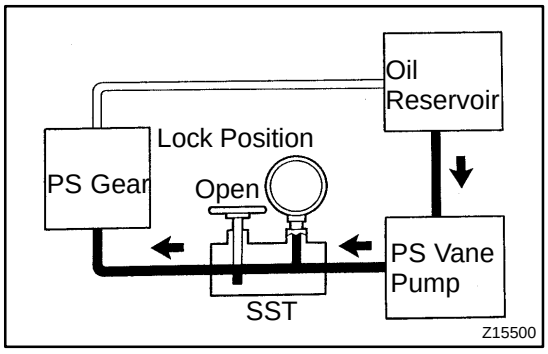

(i) With the engine idling and valve fully opened, turn the steering wheel to full lock.

Minimum fluid pressure:

7,845 kPa (80 kgf/cm^2, 1,138 psi)

NOTICE:

★ **Do not maintain lock position for more than 10 seconds.**

★ **Do not let the fluid temperature become too high.**

(j) Disconnect the SST.

SST 09640-10010 (09641-01010, 09641-01030, 09641-01060)

(k) Connect the pressure feed tube (See page SR-35).

(l) Bleed the power steering system (See page SR-4).

POWER STEERING GEAR

COMPONENTS

SR0ET-05

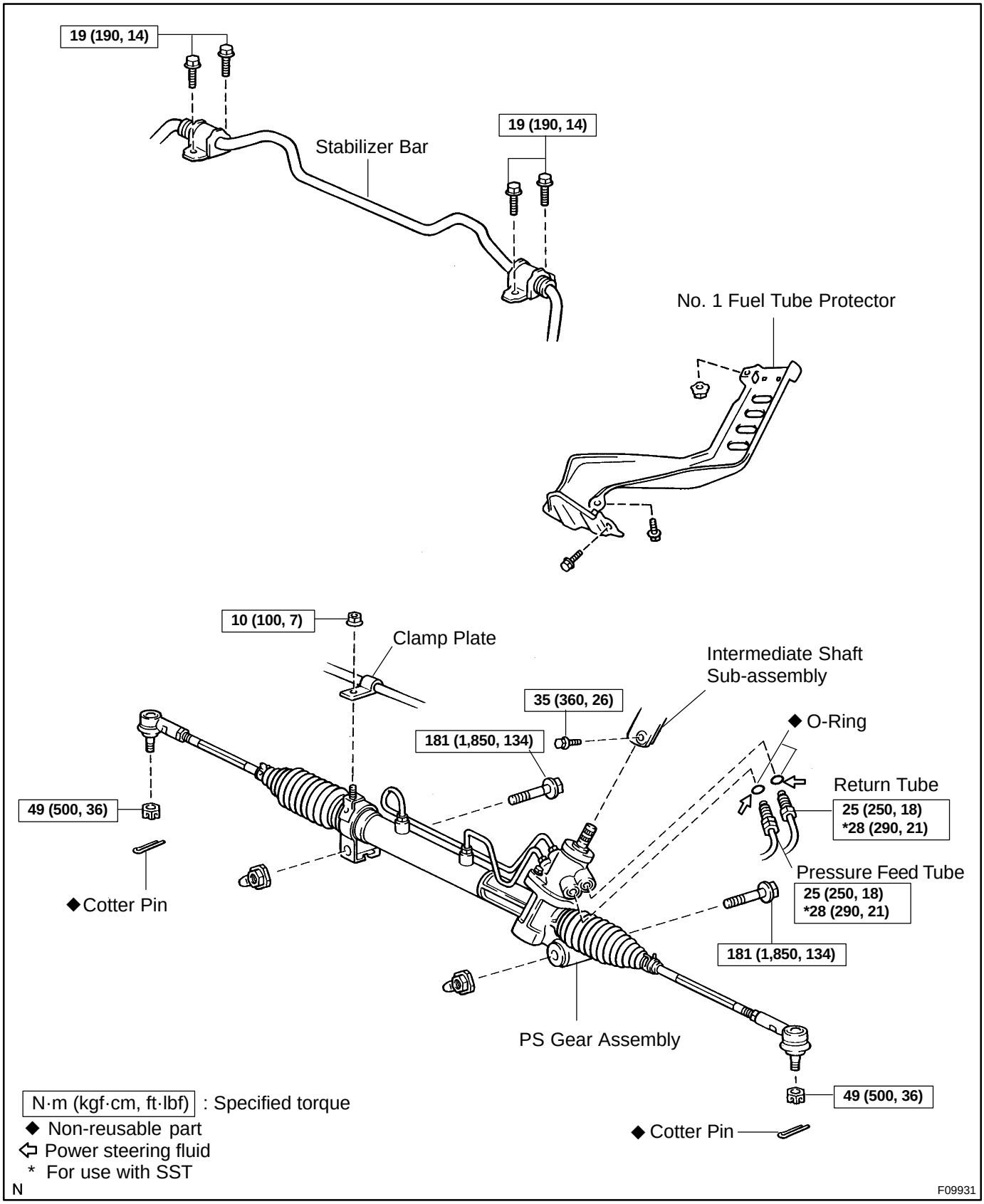

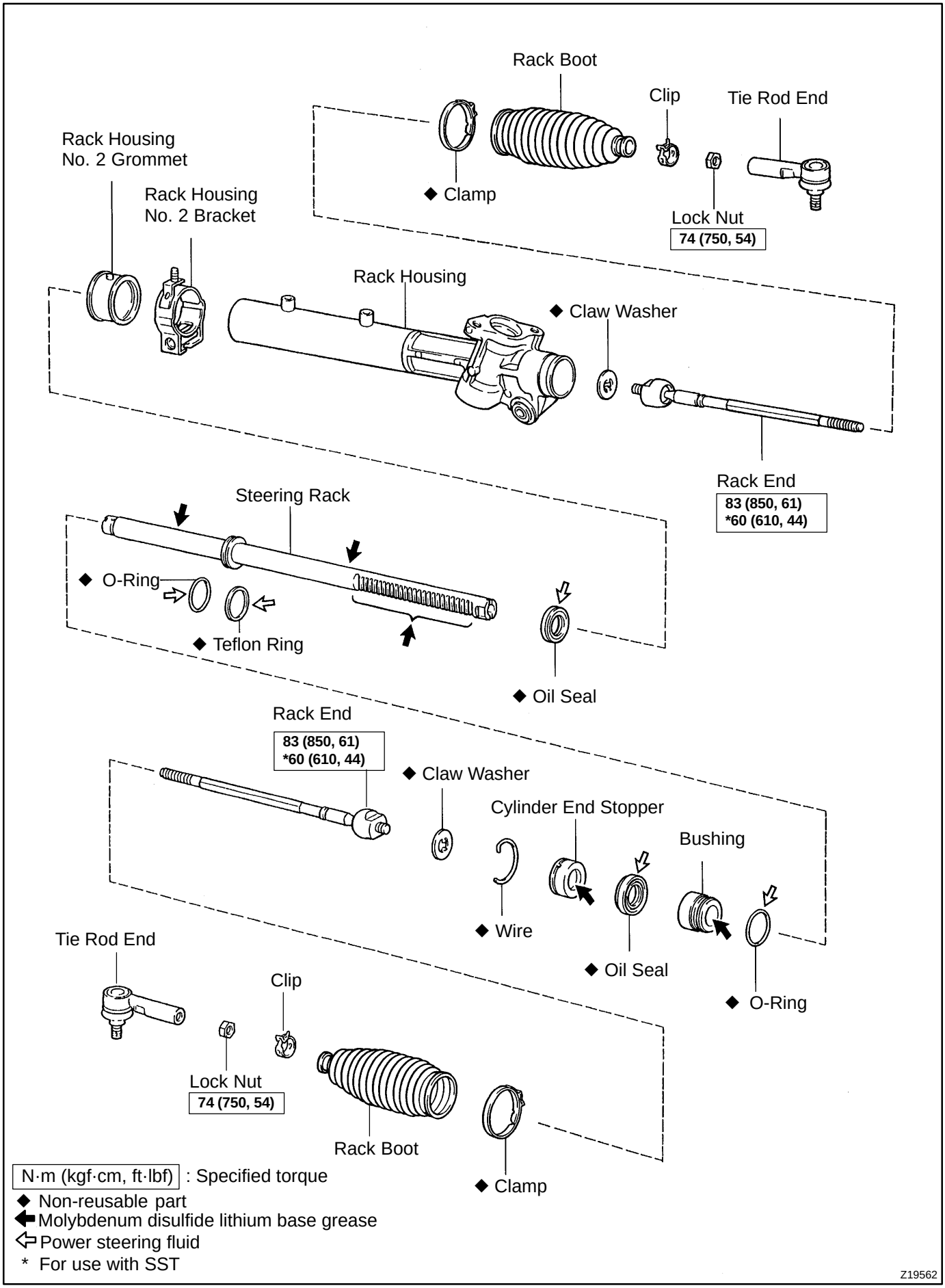
Rack Boot
Clip
Tie Rod End
Rack Housing
No. 2 Grommet
Rack Housing
No. 2 Bracket
◆ Clamp
Lock Nut
74 (750, 54)
Rack Housing
◆ Claw Washer
Rack End
83 (850, 61)
*60 (610, 44)
Steering Rack
◆ O-Ring
◆ Teflon Ring
◆ Oil Seal
Rack End
83 (850, 61)
*60 (610, 44)
◆ Claw Washer
Cylinder End Stopper
Bushing
◆ Wire
◆ Oil Seal
◆ O-Ring
Tie Rod End
Clip
Lock Nut
74 (750, 54)
Rack Boot
◆ Clamp
N·m (kgf·cm, ft·lbf) : Specified torque
◆ Non-reusable part
Molybdenum disulfide lithium base grease
Power steering fluid
* For use with SST
Z19562

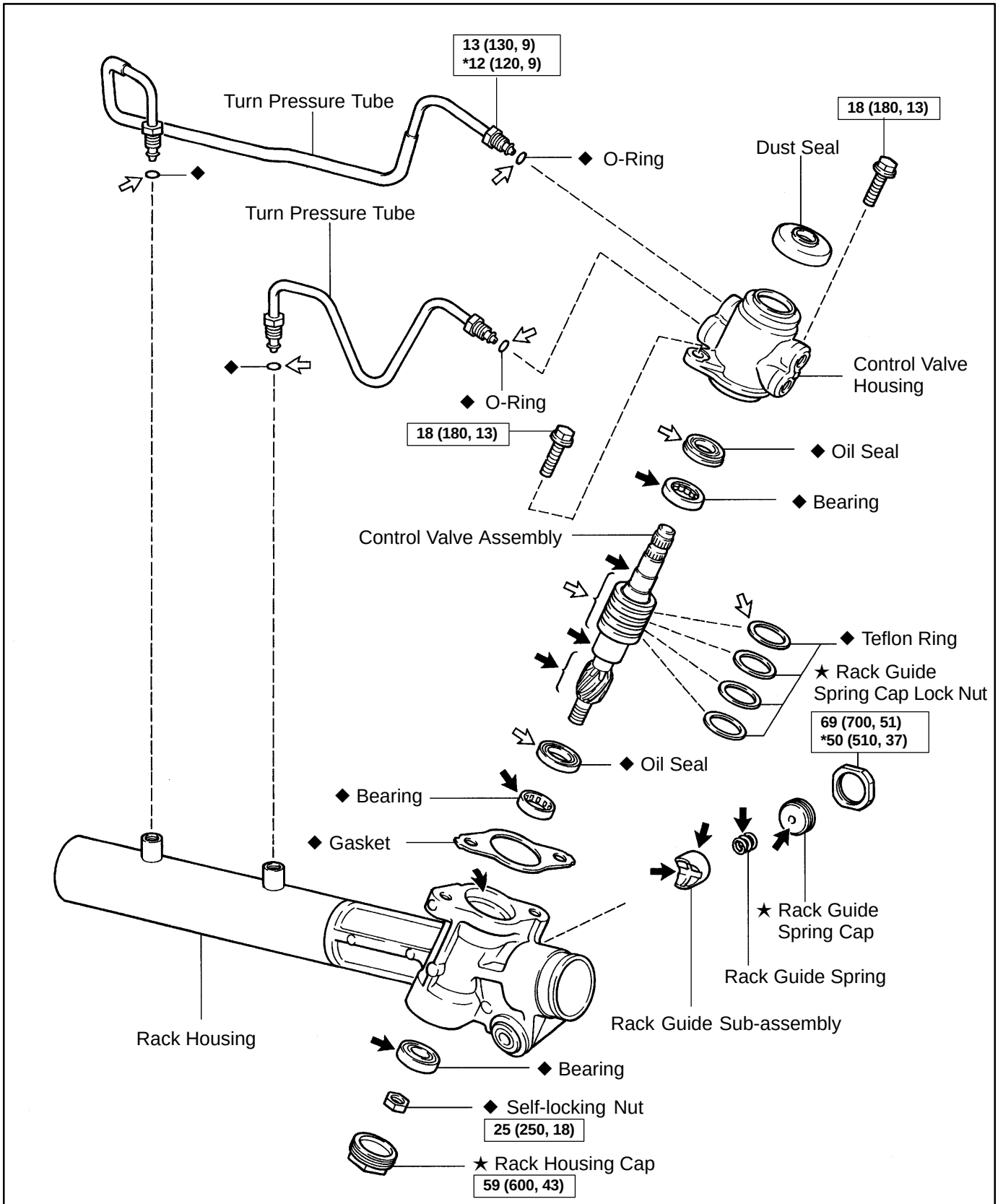

N·m (kgf·cm, ft·lbf) : Specified torque
◆ Non-reusable part
★ Precoated part
Molybdenum disulfide lithium base grease
Power steering fluid
* For use with SST

F09751

SR0EV-05

DISASSEMBLY

NOTICE:

When using a vise, do not overtighten it.

1. SECURE PS GEAR ASSEMBLY IN VISE

Using SST, secure the PS gear assembly in a vise.

SST 09612-00012

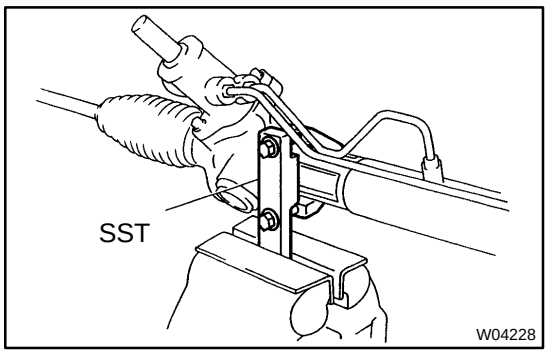

2. REMOVE 2 TURN PRESSURE TUBES

(a) Using SST, remove the 2 turn pressure tubes.
SST 09023-38200

(b) Remove the 4 O-rings from the 2 turn pressure tubes.

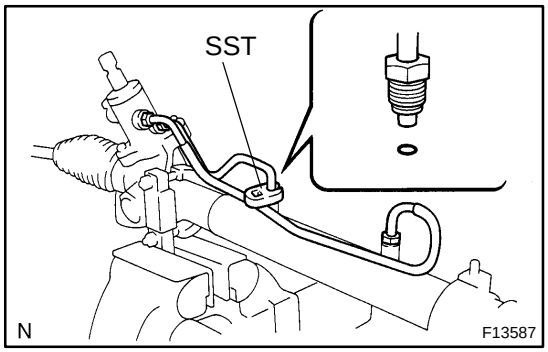

3. REMOVE RH AND LH TIE ROD ENDS AND LOCK NUTS

(a) Place matchmarks on the tie rod end and rack end.

(b) Loosen the lock nut, and remove the tie rod end and lock nut.

(c) Employ the same manner described above to the other side.

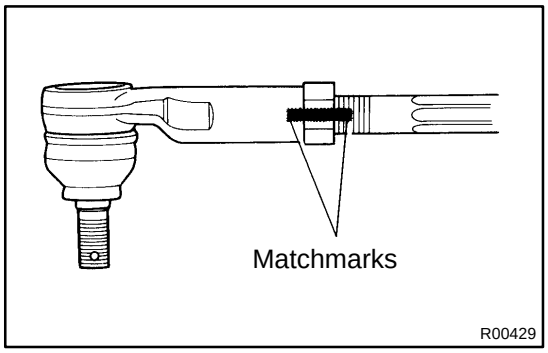

4. REMOVE RH AND LH CLIPS, RACK BOOTS AND CLAMPS

(a) Using a screwdriver, loosen the clamp.

NOTICE:

Be careful not to damage the rack boot.

(b) Remove the clip and rack boot.

(c) Employ the same manner described above to the other side.

HINT:

Mark the RH and LH rack boot.

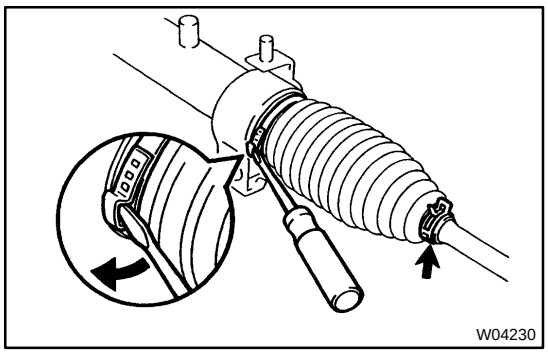

5. REMOVE RH AND LH RACK ENDS AND CLAW WASHERS

(a) Using a screwdriver and hammer, unstake the claw washer.

NOTICE:

Avoid any impact on the steering rack.

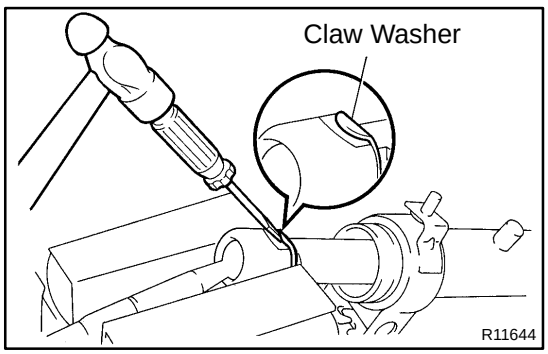

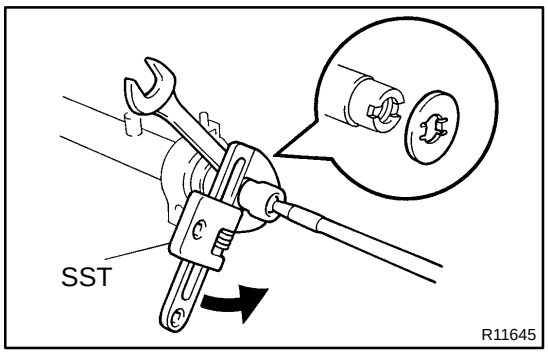

(b) Using a spanner (24 mm) hold the steering rack steadily and using SST, remove the rack end.
SST 09922-10010

NOTICE:
Use SST 09922-10010 in the direction shown in the illustration.

(c) Remove the claw washer.
(d) Employ the same manner described above to the other side.

HINT:
Mark the RH and LH rack ends.

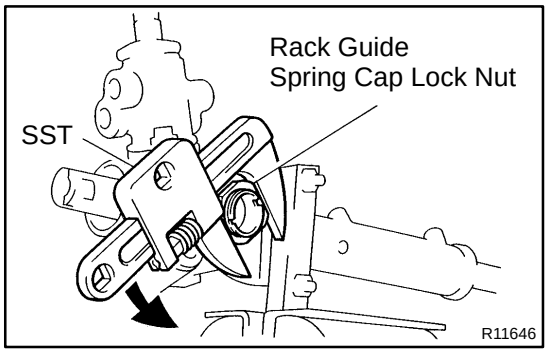

6. REMOVE RACK GUIDE SPRING CAP LOCK NUT

Using SST, remove the rack guide spring cap lock nut.
SST 09922-10010

NOTICE:
Use SST 09922-10010 in the direction shown in the illustration.

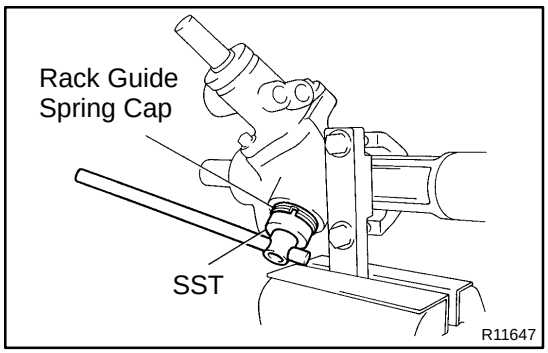

7. REMOVE RACK GUIDE SPRING CAP, RACK GUIDE SPRING, RACK GUIDE SUB-ASSEMBLY

(a) Using SST, remove the rack guide spring cap.
SST 09631-10021
(b) Remove the rack guide spring and rack guide sub-assembly.

8. REMOVE RACK HOUSING CAP

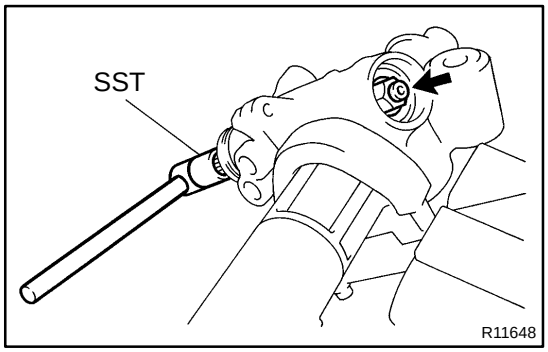

9. REMOVE SELF-LOCKING NUT

Using SST, stop the control valve shaft rotating and remove the self-locking nut.
SST 09616-0001 1

10. REMOVE DUST SEAL

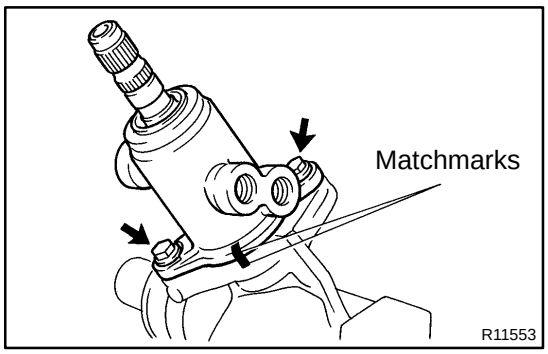

11. REMOVE CONTROL VALVE HOUSING WITH CONTROL VALVE ASSEMBLY

(a) Place matchmarks on the control valve housing and rack housing.

(b) Remove the 2 bolts and control valve housing.

(c) Remove the gasket from the rack housing.

12. REMOVE CONTROL VALVE ASSEMBLY

(a) To prevent oil seal lip damage, wind vinyl tape on the serrated part of the control valve shaft.

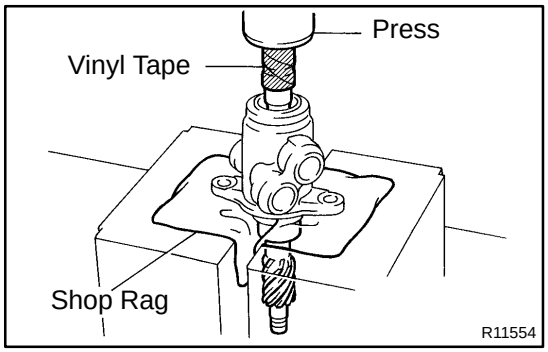

(b) Press out the control valve assembly with the oil seal.

NOTICE:

- ★ **Place a shop rag between the valve housing and the blocks.**
- ★ **Be careful not to drop the valve assembly.**
- ★ **Be careful not to damage the oil seal lip.**

13. REMOVE OIL SEAL

Remove the oil seal from the control valve assembly.

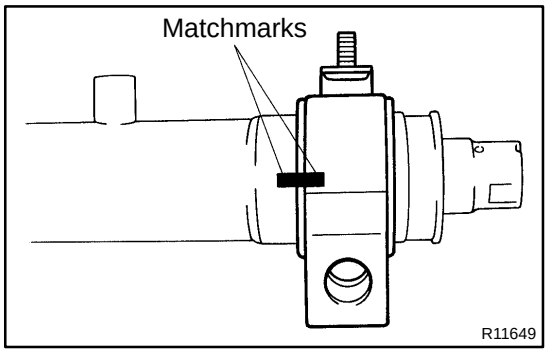

14. REMOVE RACK HOUSING NO. 2 BRACKET AND RACK HOUSING NO. 2 GROMMET

(a) Place matchmarks on the rack housing No. 2 bracket and rack housing.

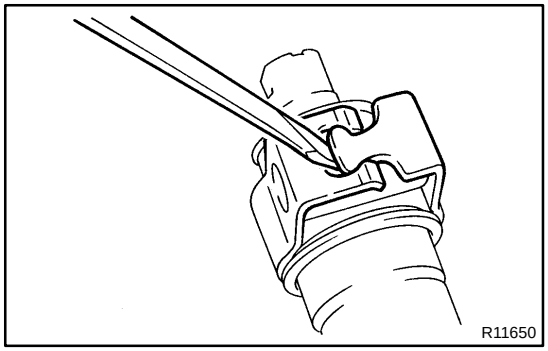

(b) Using a screwdriver, pry the clamp of the rack housing No. 2 bracket and remove the rack housing No. 2 bracket.

(c) Remove the rack housing No. 2 grommet from the rack housing No. 2 bracket.

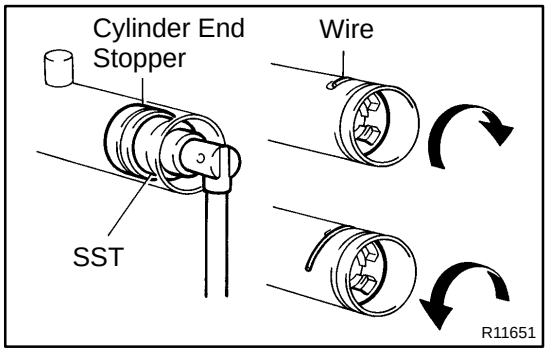

15. REMOVE CYLINDER END STOPPER

(a) Using SST, turn the cylinder end stopper clockwise until the wire end is visible through the service hole.
SST 09631-10021

(b) Using SST, turn the cylinder end stopper counterclockwise, and remove the wire and cylinder end stopper.
SST 09631-10021

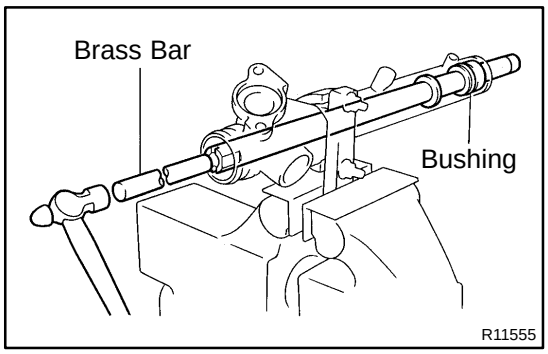

16. REMOVE STEERING RACK AND BUSHING

(a) Using a brass bar and hammer, tap out the steering rack with the bushing.

(b) Remove the bushing from the steering rack.

(c) Remove the O-ring from the bushing.

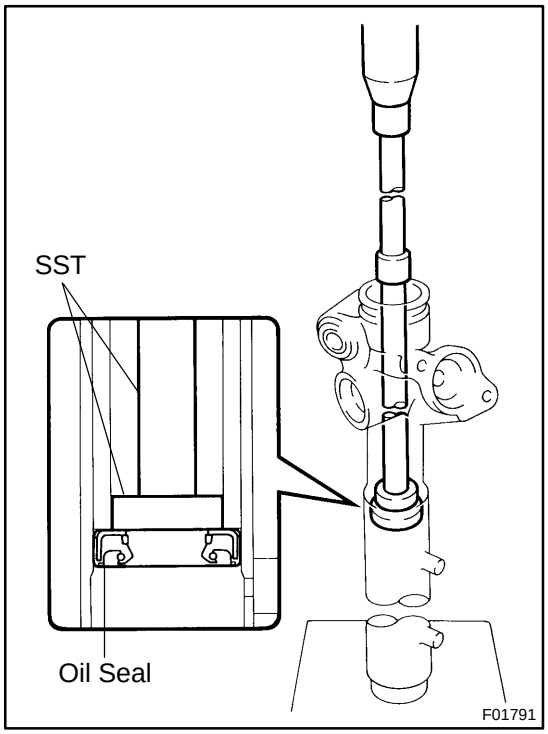

17. REMOVE OIL SEAL

Using SST, press out the oil seal.

SST 09950-60010 (09951-00290),
09950-70010 (09951-07360)

SR0RV-02

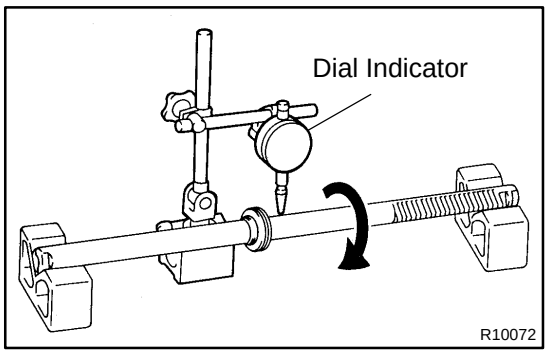

INSPECTION

NOTICE:

When using a vise, do not overtighten it.

INSPECT STEERING RACK

(a) Using a dial indicator, check the steering rack for runout and for teeth wear and damage.
Maximum runout: 0.3 mm (0.012 in.)

(b) Check the back surface for wear and damage.

SR0EY-06

INSTALLATION

1. INSTALL PS GEAR ASSEMBLY

(a) Install the PS gear assembly from the LH of the vehicle.

NOTICE:

Do not damage the turn pressure tubes.

(b) Install the 2 gear assembly set bolts and nuts.

Torque: 181 N·m (1,850 kgf·cm, 134 ft·lbf)

HINT:

Lift up the stabilizer bar and install the bolts.

2. INSTALL NO. 1 FUEL TUBE PROTECTOR

Install the No. 1 fuel tube protector with 2 bolts and nut.

3. CONNECT STABILIZER BAR

Connect the stabilizer bar with the 4 bolts.

Torque: 19 N·m (190 kgf·cm, 14 ft·lbf)

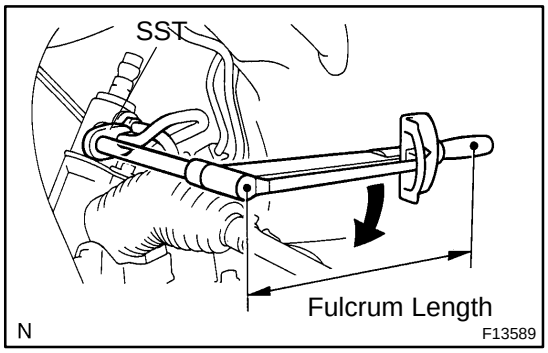

4. CONNECT PRESSURE FEED AND RETURN TUBES

(a) Coat 2 new O-rings with power steering fluid and install them to the pressure feed and return tubes.

(b) Using SST, connect the pressure feed and return tubes.

SST 09023-38400

Torque: 28 N·m (290 kgf·cm, 21 ft·lbf)

HINT:

★ Use a torque wrench with a fulcrum length of 300 mm (11.81 in.).

★ This torque value is effective in case that SST is parallel to a torque wrench.

5. CONNECT CLAMP PLATE

Connect the clamp plate with nut.

Torque: 10 N·m (100 kgf·cm, 7 ft·lbf)

6. CONNECT INTERMEDIATE SHAFT SUB-ASSEMBLY (See page SR-22)

7. CONNECT RH AND LH TIE ROD ENDS (See page SA-13)

8. PLACE FRONT WHEELS FACING STRAIGHT AHEAD

HINT:

Do it with the front of the vehicle jacked up.

9. CENTER SPIRAL CABLE (See page SR-22)

10. INSTALL STEERING WHEEL

(a) Align the matchmarks on the steering wheel and steering column main shaft.

(b) Temporarily tighten the steering wheel set nut.

(c) Connect the connector.

11. BLEED POWER STEERING SYSTEM (See page SR-4)

12. CHECK STEERING WHEEL CENTER POINT
13. TORQUE STEERING WHEEL SET NUT
    Torque: 50 N·m (510 kgf·cm, 37 ft·lbf)
14. INSTALL STEERING WHEEL PAD (See page SR-22)
15. CHECK FRONT WHEEL ALIGNMENT
    (See page SA-4)
16. w/ VSC:
    PERFORM STEERING ANGLE SENSOR ZERO POINT CALIBRATION (See page DI-252)

SR0RW-03

REASSEMBLY

NOTICE:

When using a vise, do not overtighten it.

1. COAT PARTS INDICATED BY ARROWS WITH POWER STEERING FLUID OR MOLYBDENUM DISULFIDE LITHIUM BASE GREASE (See page SR-37)

2. INSTALL OIL SEAL

(a) Coat a new oil seal lip with power steering fluid.

(b) Using SST, press in the oil seal.

SST 09950- 60010 (09951- 00240, 09951- 00430, 09952-06010), 09950-70010 (09951-07360)

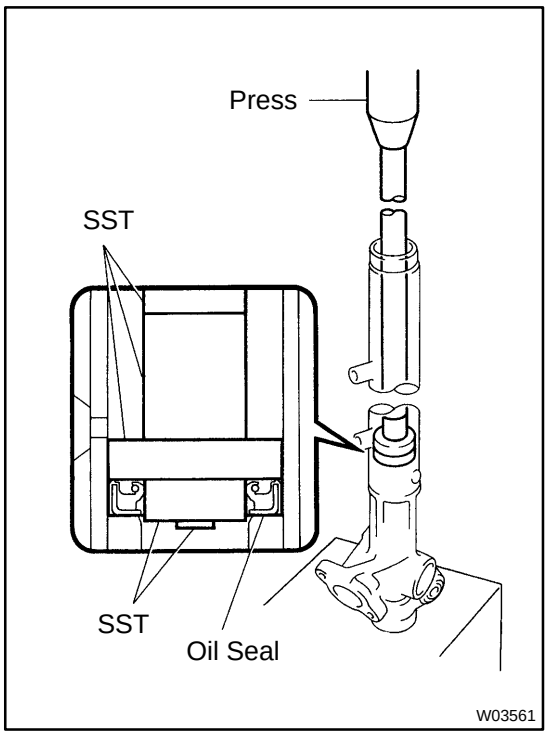

NOTICE:

★ **Make sure that the oil seal is installed facing in the correct direction.**

★ **Take care that the oil seal does not get reversed as you install it.**

3. INSTALL STEERING RACK

(a) Install SST to the steering rack.

SST 09631-33010

HINT:

If necessary, scrape the burrs off the steering rack teeth end and burnish.

(b) Coat the SST with power steering fluid.

(c) Install the steering rack into the rack housing.

NOTICE:

Be careful not to damage the oil seal lip.

(d) Remove SST.

SST 09631-33010

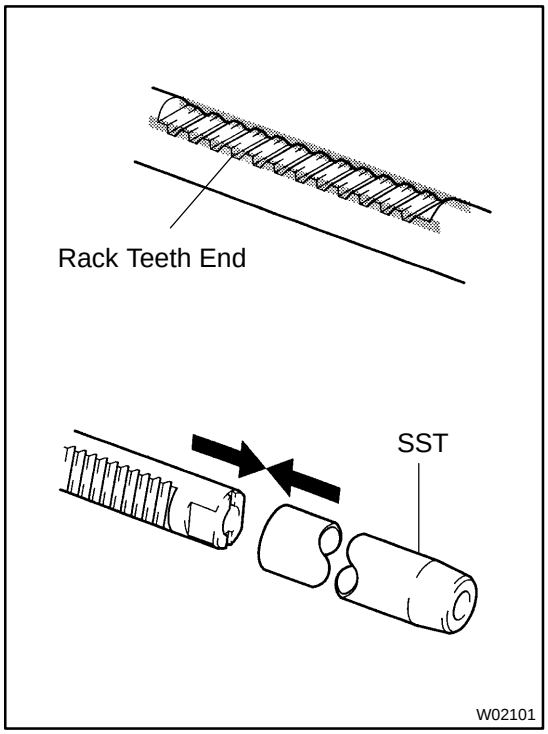

4. INSTALL BUSHING

(a) Coat a new O-ring with power steering fluid and install it to the bushing.

(b) To prevent oil seal lip damage, wind vinyl tape on the steering rack end, and apply power steering fluid.

(c) Install the bushing.

NOTICE:

★ **Make sure that the bushing is installed facing in the correct direction.**

★ **Be careful not to damage the oil seal lip.**

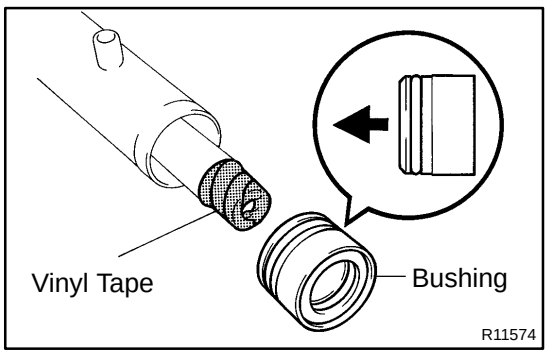

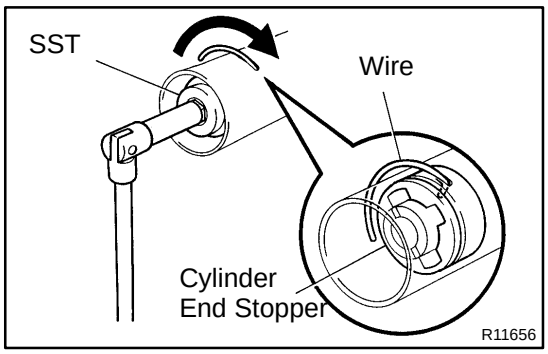

5. INSTALL CYLINDER END STOPPER

(a) Align the installation hole for the wire of the cylinder end stopper with the slot of the rack housing.

(b) Install a new wire into the cylinder end stopper.

(c) Using SST, turn the cylinder end stopper clockwise 450 ± 50°.
SST 09631-10021

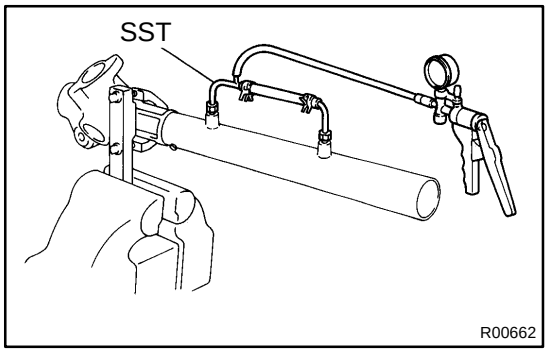

6. AIR TIGHTNESS TEST

(a) Install SST to the rack housing.
SST 09631-12071

(b) Apply 53 kPa (400 mmHg, 15.75 in.Hg) of vacuum for about 30 seconds.

(c) Check that there is no change in the vacuum.

If there is change in the vacuum, check the installation of the oil seals.

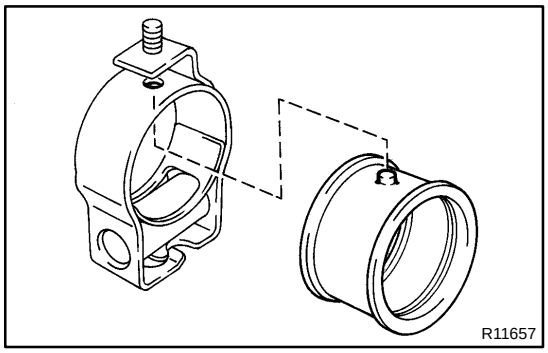

7. INSTALL RACK HOUSING NO. 2 BRACKET AND RACK HOSING NO. 2 GROMMET

(a) Install the rack housing No. 2 grommet to the rack housing No. 2 bracket.

HINT:
Align the projection of the rack housing No. 2 grommet with the hole of the rack housing No. 2 bracket.

(b) Align the matchmarks on the rack housing No. 2 bracket and rack housing.

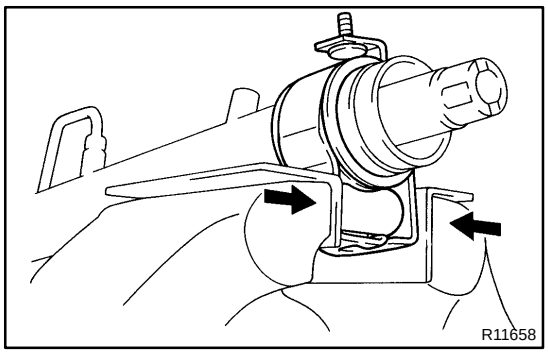

(c) Place the rack housing No. 2 bracket in a vise and install the vise to fasten the clamp.

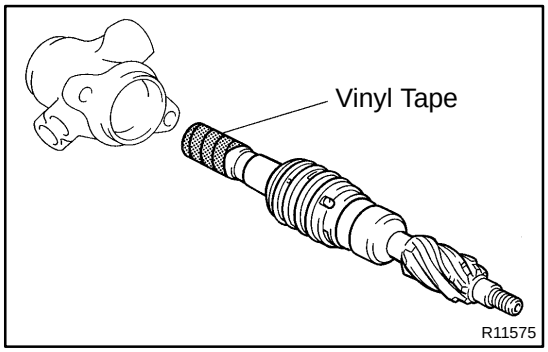

8. INSTALL CONTROL VALVE ASSEMBLY

(a) To prevent oil seal lip damage, wind vinyl tape on the serrated part of the control valve shaft.

(b) Coat the teflon rings with power steering fluid.

(c) Install the control valve assembly into the control valve housing.

NOTICE:
Be careful not to damage the teflon rings and oil seal.

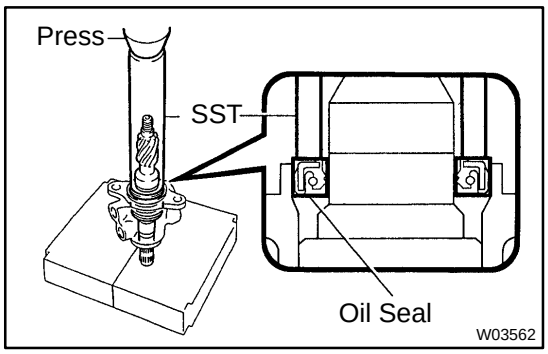

9. INSTALL OIL SEAL

(a) Coat a new oil seal lip with power steering fluid.

(b) Using SST, press in the oil seal.

SST 09612-2201 1

NOTICE:

Make sure that the oil seal is installed facing in the correct direction.

10. INSTALL CONTROL VALVE HOUSING WITH CONTROL VALVE ASSEMBLY

(a) Place a new gasket on the rack housing.

(b) Align the matchmarks on the control valve housing and rack housing.

(c) Install the 2 bolts.

Torque: 18 N·m (180 kgf·cm, 13 ft·lbf)

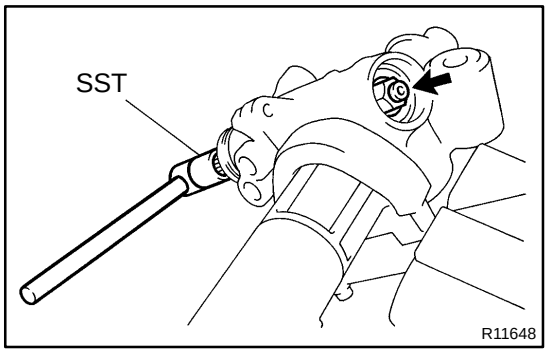

11. INSTALL SELF-LOCKING NUT

Using SST, stop the control valve shaft rotating and install a new self-locking nut.

SST 09616-0001 1

Torque: 25 N·m (250 kgf·cm, 18 ft·lbf)

12. INSTALL DUST SEAL

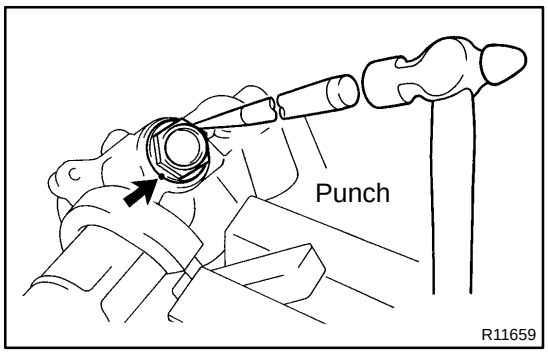

13. INSTALL RACK HOUSING CAP

(a) Apply sealant to 2 or 3 threads of the rack housing cap.

Sealant:

Part No.08833-00080, THREE BOND 1344, LOCTITE 242 or equivalent

(b) Install the rack housing cap.

Torque: 59 N·m (600 kgf·cm, 43 ft·lbf)

(c) Using a punch and hammer, stake the 2 parts of the rack housing cap.

14. INSTALL RACK GUIDE SUB- ASSEMBLY, RACK GUIDE SPRING AND RACK GUIDE SPRING CAP

(a) Install the rack guide sub- assembly and rack guide spring.

(b) Apply sealant to 2 or 3 threads of the rack guide spring cap.

Sealant:

Part No.08833-00080, THREE BOND 1344, LOCTITE 242 or equivalent

(c) Temporarily install the rack guide spring cap.

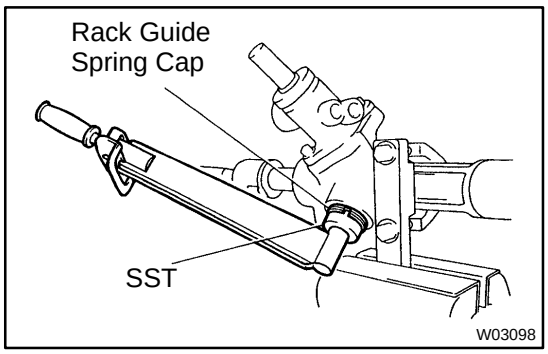

15. ADJUST TOTAL PRELOAD

(a) To prevent the steering rack teeth from damaging the oil seal lip, temporarily install the RH and LH rack ends.

(b) Using SST, torque the rack guide spring cap.
SST 09631-10021
Torque: 25 N·m (250 kgf·cm, 18 ft·lbf)

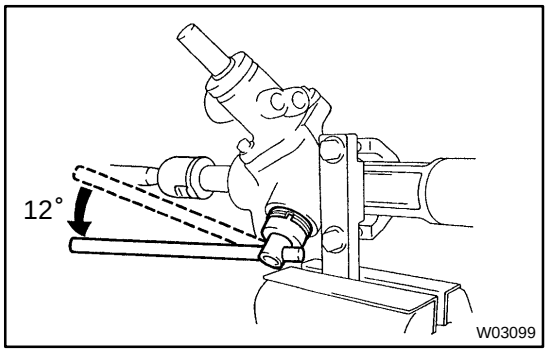

(c) Using SST, return the rack guide spring cap 12°.
SST 09631-10021

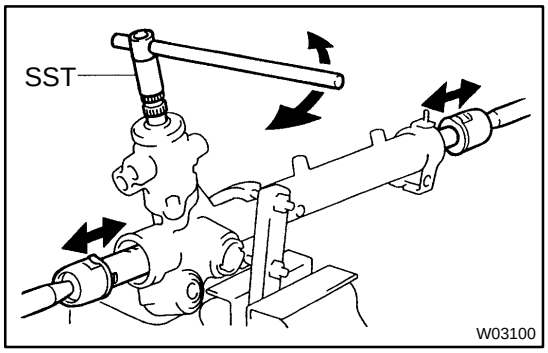

(d) Using SST, turn the control valve shaft right and left 1 or 2 times.
SST 09616-0001 1

(e) Using SST, loosen the rack guide spring cap until the rack guide spring is not functioning.
SST 09631-10021

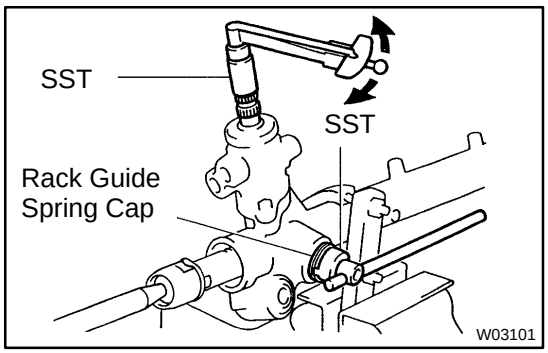

(f) Using SST and a torque wrench, tighten the rack guide spring cap until the preload is within specification.
SST 09616-0001 1, 09631-10021
Preload (turning):
0.8 - 1.4 N·m (8 - 14 kgf·cm, 6.9 - 12.2 in.·lbf)

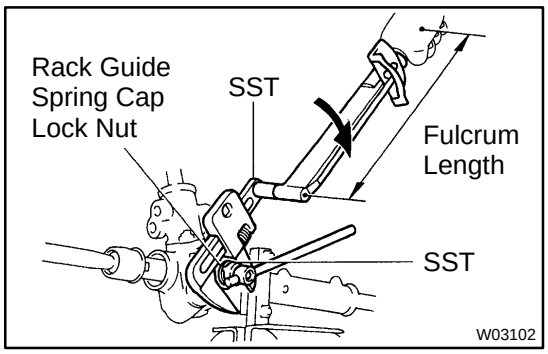

16. INSTALL RACK GUIDE SPRING CAP LOCK NUT

(a) Apply sealant to 2 or 3 threads of the rack guide spring cap lock nut.
Sealant:
Part No.08833-00080, THREE BOND 1344, LOCTITE 242 or equivalent

(b) Temporarily install the rack guide spring cap lock nut.

(c) Using SST, hold the rack guide spring cap and using another SST torque the rack guide spring cap lock nut.
SST 09631-10021, 09922-10010
Torque: 50 N·m (510 kgf·cm, 37 ft·lbf)

NOTICE:
Use SST 09922-10010 in the direction shown in the illustration.

HINT:
Use a torque wrench with a fulcrum length of 345 mm (13.58 in.).

(d) Recheck the total preload.
Preload (turning):
0.8 - 1.4 N·m (8 - 14 kgf·cm, 6.9 - 12.2 in.·lbf)

(e) Remove the RH and LH rack ends.

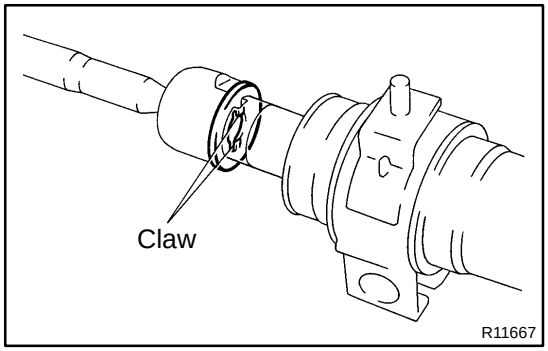

17. INSTALL RH AND LH CLAW WASHERS AND RACK ENDS

(a) Install a new claw washer, and temporarily install the rack ends.

HINT:
Align the claws of the claw washers with the steering rack grooves.

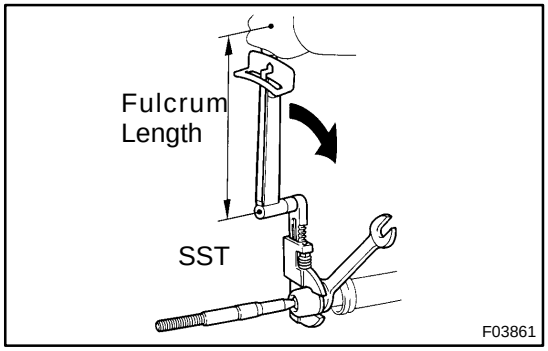

(b) Using a spanner (24 mm), hold the steering rack steadily and using SST, torque the rack end.
SST 09922-10010
Torque: 60 N·m (610 kgf·cm, 44 ft·lbf)

NOTICE:
Use SST 09922-10010 in the direction shown in the illustration.

HINT:
Use a torque wrench with a fulcrum length of 345 mm (13.58 in.).

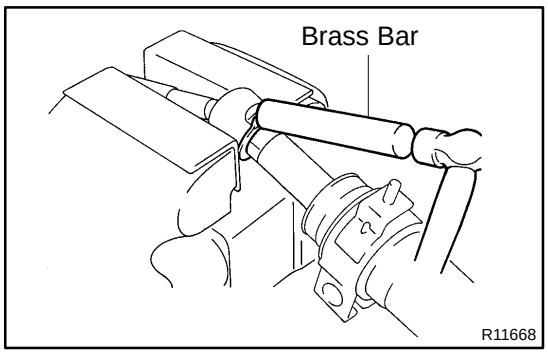

(c) Using a brass bar and hammer, stake the claw washer.

NOTICE:

Avoid any impact on the steering rack.

(d) Employ the same manner described above to the other side.

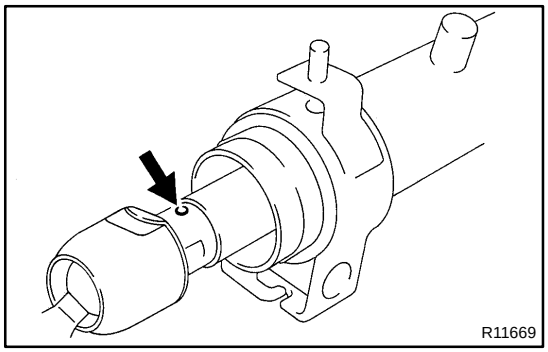

18. INSTALL RH AND LH RACK BOOTS, CLAMPS AND CLIPS

(a) Ensure that the steering rack hole is not clogged with grease.

HINT:

If the hole is clogged, the pressure inside the rack boot will change after it is assembled and the steering wheel is turned.

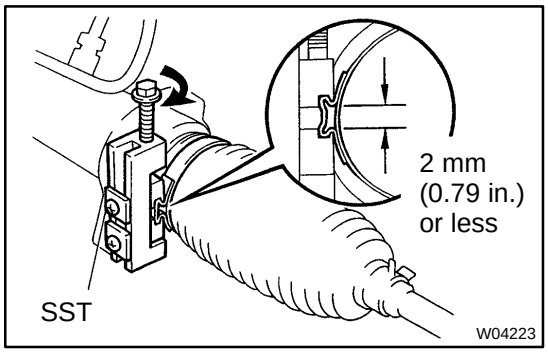

(b) Install the rack boot, clip and a new clamp.

NOTICE:

Be careful not to damage or twist the rack boot.

(c) Using SST, tighten the clamp as shown in the illustration.
SST 09521-24010

(d) Employ the same manner described above to the other side.

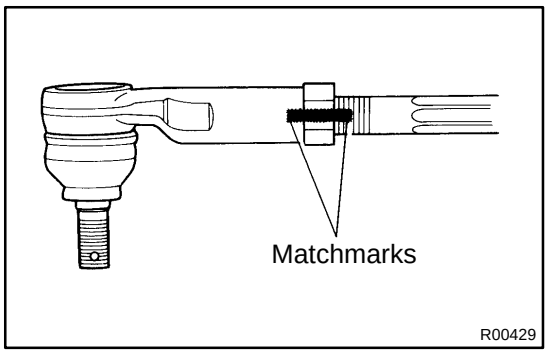

19. INSTALL RH AND LH TIE ROD ENDS AND LOCK NUTS

(a) Screw the lock nut and tie rod end onto the rack end until the matchmarks are aligned.

(b) After adjusting toe-in, torque the lock nut (See page SA-4).
Torque: 74 N·m (750 kgf·cm, 54 ft·lbf)

(c) Employ the same manner described above to the other side.

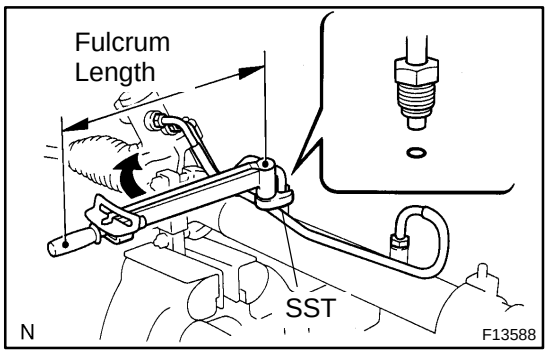

20. INSTALL 2 TURN PRESSURE TUBES

(a) Coat 4 new O-rings with power steering fluid and install them to the 2 turn pressure tubes.

(b) Using SST, install the 2 turn pressure tubes.
SST 09023-38200
Torque: 12 N·m (120 kgf·cm, 9 ft·lbf)

HINT:

★ Use a torque wrench with a fulcrum length of 250 mm (9.84 in.).

★ This torque value is effective in case that SST is parallel to a torque wrench.

SR0EU-05

REMOVAL

NOTICE:

Remove the steering wheel assembly before the steering gear removal, because there is possibility of breaking of the spiral cable.

1. **PLACE FRONT WHEELS FACING STRAIGHT AHEAD**
2. **REMOVE STEERING WHEEL PAD (See page SR-12)**
3. **REMOVE STEERING WHEEL (See page SR-12)**
4. **DISCONNECT RH AND LH TIE ROD ENDS (See page SA-9)**
5. **DISCONNECT INTERMEDIATE SHAFT SUB- ASSEMBLY (See page SR-12)**
6. **DISCONNECT CLAMP PLATE**

Remove the nut and clamp plate.

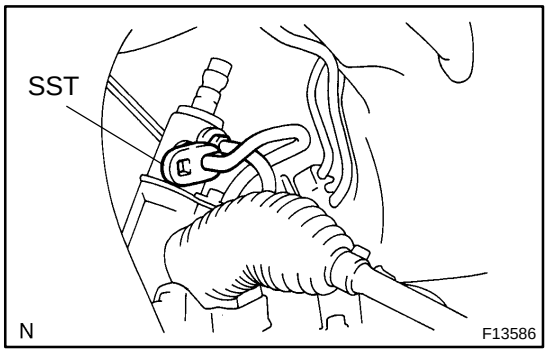

7. **DISCONNECT PRESSURE FEED AND RETURN TUBES**

(a) Using SST, disconnect the pressure feed and return tubes.

SST 09023-38400

(b) Remove the 2 O-rings from the pressure feed and return tubes.

8. **DISCONNECT STABILIZER BAR**

Remove the 4 bolts and disconnect the stabilizer bar.

HINT:

Do not remove the stabilizer bar.

9. **REMOVE NO. 1 FUEL TUBE PROTECTOR**

Remove the 2 bolts, nut and No. 1 fuel tube protector.

10. **REMOVE PS GEAR ASSEMBLY**

(a) Remove the 2 PS gear assembly set bolts and nuts.

HINT:

Lift up the stabilizer bar and remove the bolts.

(b) Remove the PS gear assembly from the LH of the vehicle.

NOTICE:

Do not damage the turn pressure tubes.

SR0RX-02

REPLACEMENT

NOTICE:

When using a vise, do not over tighten it.

1. IF NECESSARY, REPLACE OIL SEAL AND BEARING

(a) Using SST, press out the oil seal and bearing from the control valve housing.

SST 09950-60010 (09951-00250), 09950-70010 (09951-07200)

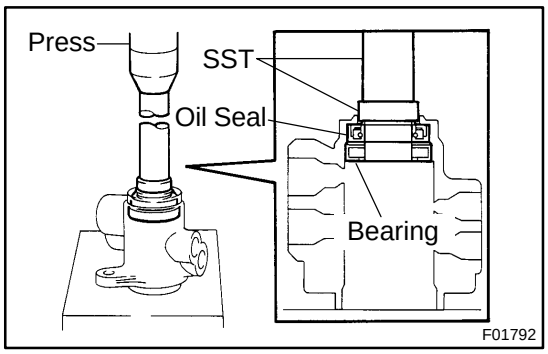

(b) Coat a new oil seal lip with power steering fluid.

(c) Using SST, press in the oil seal.

SST 09950-60010 (09951-00180, 09951-00320, 09952-06010), 09950-70010 (09951-07200)

NOTICE:

Make sure that the oil seal is installed facing in the correct direction.

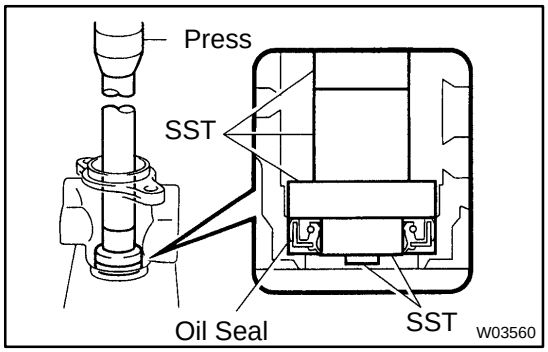

(d) Coat a new bearing with molybdenum disulfide lithium base grease.

(e) Using SST, press in the bearing.

SST 09950-60010 (09951-00180, 09951-00340, 09952-06010), 09950-70010 (09951-07200)

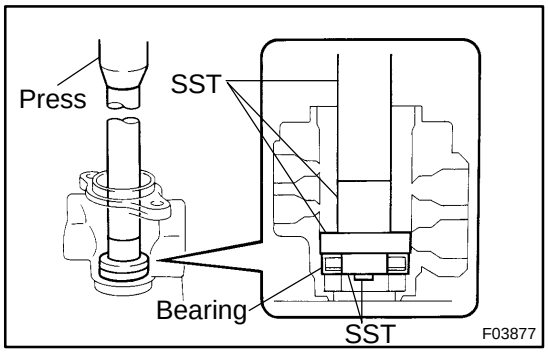

2. IF NECESSARY, REPLACE 2 BEARINGS

(a) Using a brass bar and hammer, tap out the bearing from the rack housing.

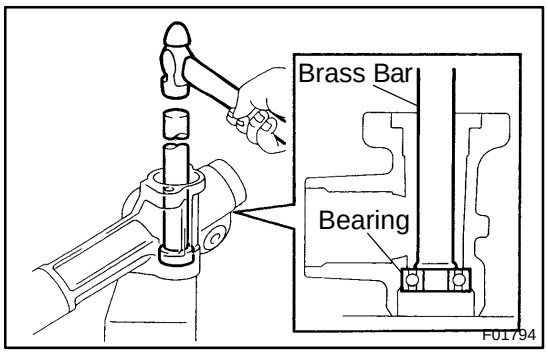

(b) Using SST, press out the bearing from the rack housing.

SST 09950-60010 (09951-00260), 09950-70010 (09951-07200)

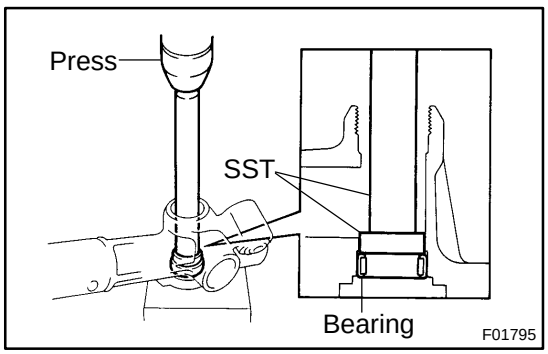

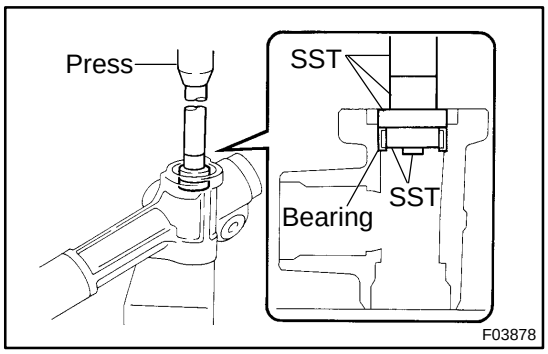

(c) Coat a new bearing with molybdenum disulfide lithium base grease.
(d) Using SST, press in the bearing.
SST 09950-60010 (09951-00250, 09951-00310, 09952-06010), 09950-70010 (09951-07200)

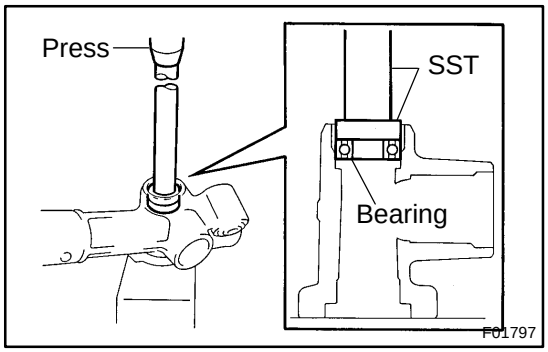

(e) Coat a new bearing with molybdenum disulfide lithium base grease.
(f) Using SST, press in the bearing.
SST 09950-60010 (09951-00320), 09950-70010 (09951-07200)

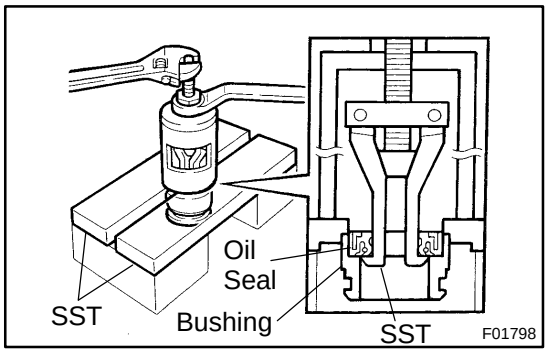

3. IF NECESSARY, REPLACE OIL SEAL
(a) Using SST, remove the oil seal from the bushing.
SST 09527-2001 1, 09612-24014 (09613-22011)
NOTICE:
Be careful not to damage the bushing.

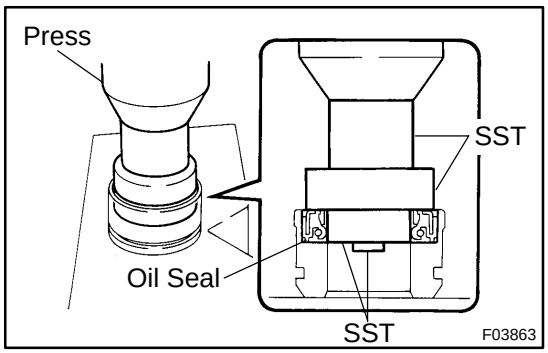

(b) Coat a new oil seal lip with power steering fluid.
(c) Using SST, press in the oil seal.
SST 09950-60010 (09951-00240, 09951-00400, 09952-06010)
NOTICE:
Make sure that the oil seal is installed facing in the correct direction.

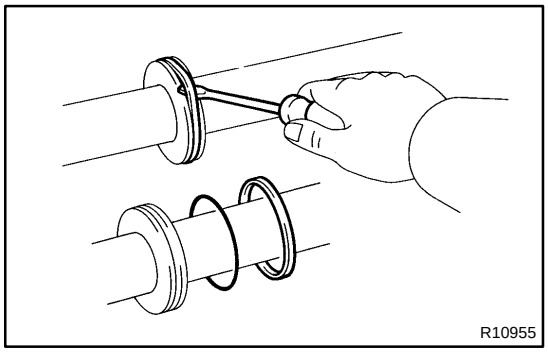

4. IF NECESSARY, REPLACE TEFLON RING AND O-RING
(a) Using a screwdriver, remove the teflon ring and O-ring from the steering rack.
NOTICE:
Be careful not to damage the groove for the teflon ring.
(b) Coat a new O-ring with power steering fluid and install it.

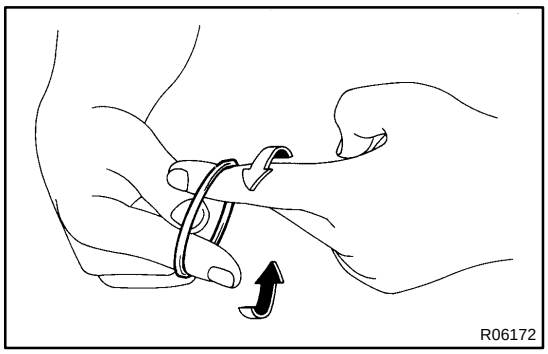

(c) Expand a new teflon ring with your fingers.

NOTICE:

Be careful not to over expand the ring.

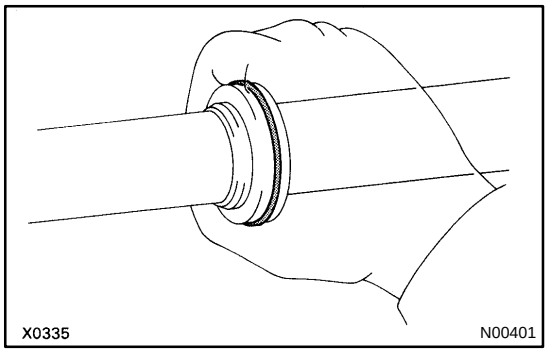

(d) Coat the teflon ring with power steering fluid.

(e) Install the teflon ring to the steering rack, and settle it down with your fingers.

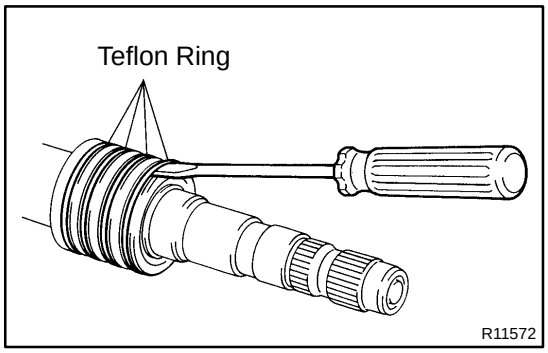

5. IF NECESSARY, REPLACE 4 TEFLON RINGS

(a) Using a screwdriver, remove the 4 teflon rings from the control valve assembly.

NOTICE:

Be careful not to damage the grooves for the teflon ring.

(b) Expand 4 new teflon rings with your fingers.

NOTICE:

Be careful not to over expand the teflon ring.

(c) Coat the teflon rings with power steering fluid.

(d) Install the teflon rings to the control valve assembly, and settle them down with your fingers.

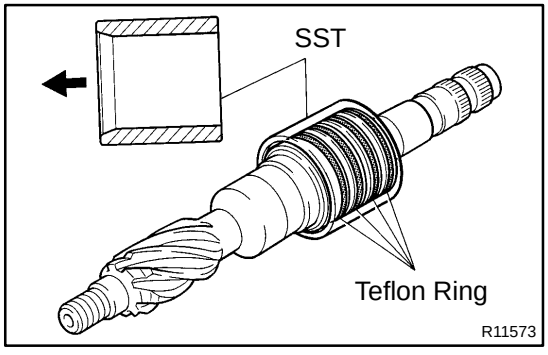

(e) Carefully slide the tapered end of SST over the teflon rings until the teflon rings fit to the control valve assembly.
SST 09631-20081

NOTICE:

Be careful not to damage the teflon rings.

POWER STEERING VANE PUMP

COMPONENTS

SR0EN-06

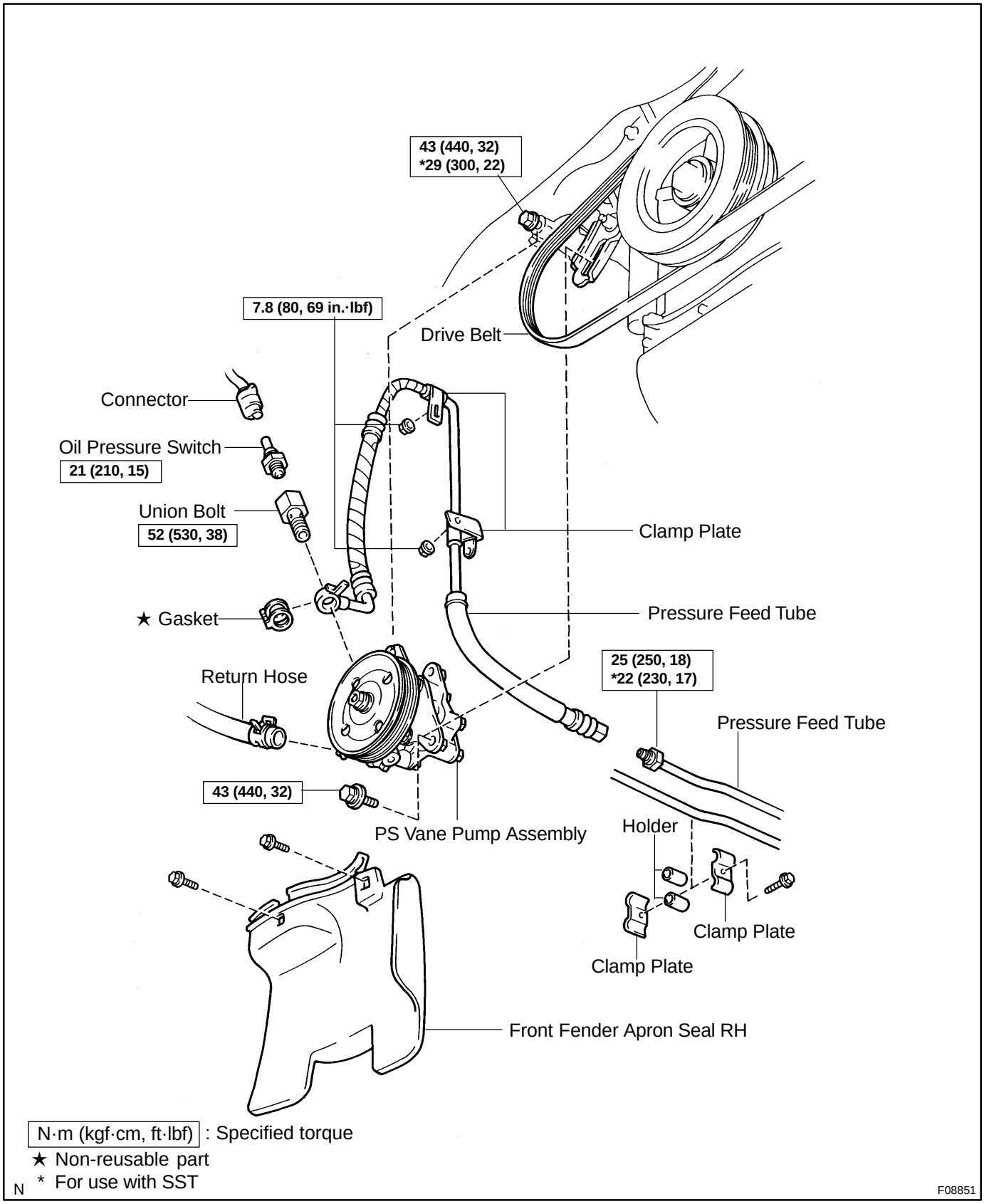

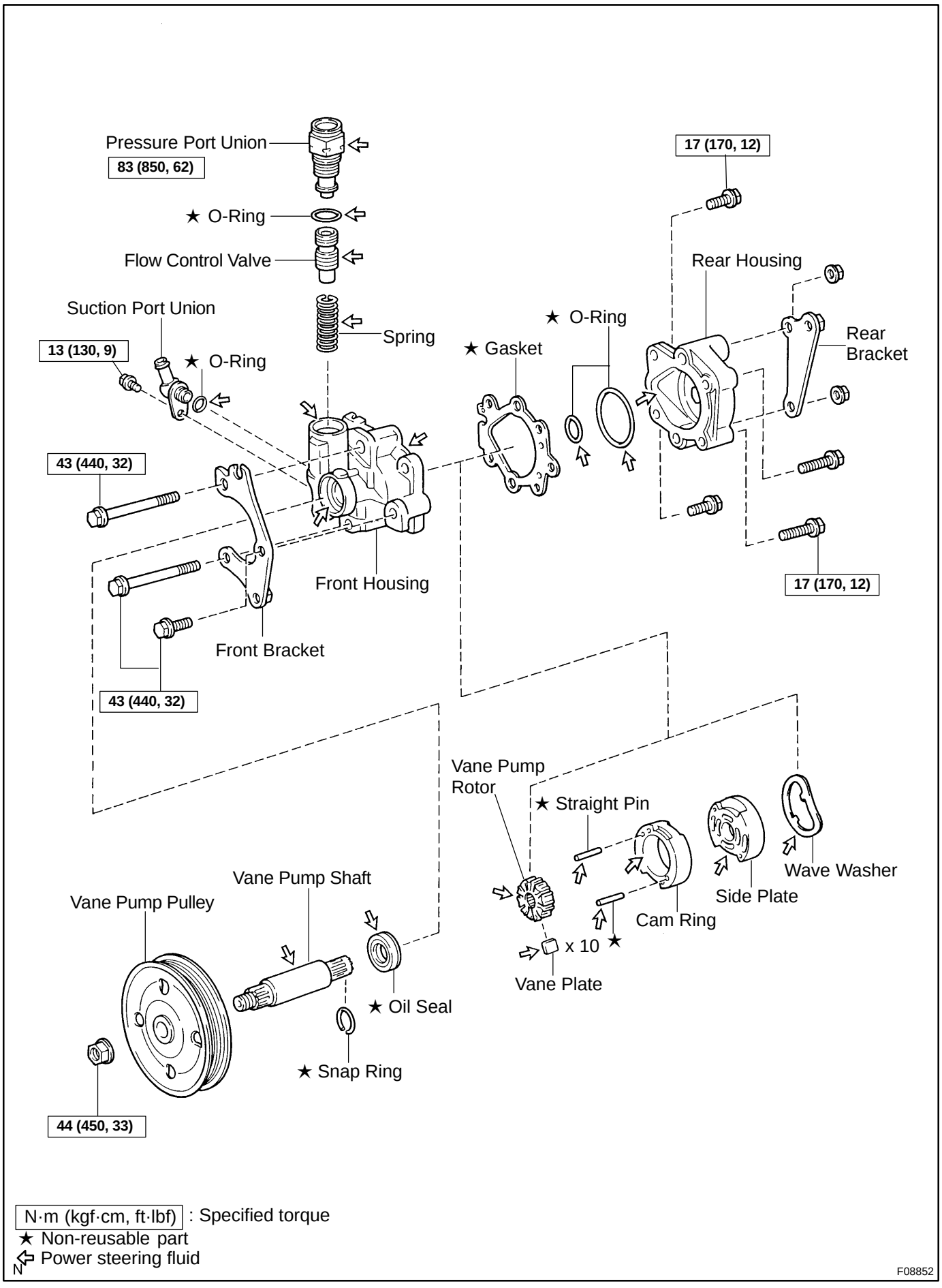
Pressure Port Union
83 (850, 62)
★ O-Ring
Flow Control Valve
Suction Port Union
13 (130, 9)
★ O-Ring
Spring
★ Gasket
★ O-Ring
17 (170, 12)
Rear Housing
Rear Bracket
43 (440, 32)
Front Housing
17 (170, 12)
Front Bracket
43 (440, 32)
Vane Pump Rotor
★ Straight Pin
Wave Washer
Side Plate
Cam Ring
x 10
★
Vane Plate
Vane Pump Shaft
Vane Pump Pulley
★ Oil Seal
★ Snap Ring
44 (450, 33)
N·m (kgf·cm, ft·lbf) : Specified torque
★ Non-reusable part
Power steering fluid
F08852

SR0EP-04

DISASSEMBLY

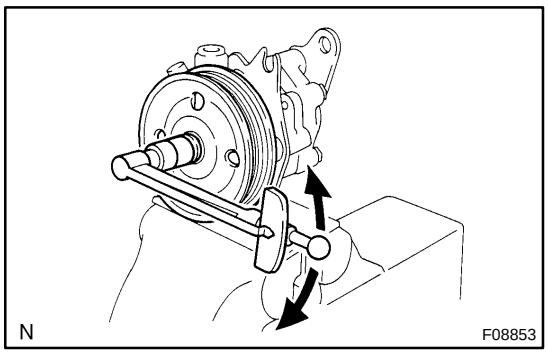

NOTICE:

When using a vise, do not overtighten it.

1. MEASURE PS VANE PUMP ROTATING TORQUE

(a) Check that the pump rotates smoothly without abnormal noise.

(b) Using a torque wrench, check the pump rotating torque.

Rotating torque:

0.3 N·m (2.8 kgf·cm, 2.4 in.·lbf) or less

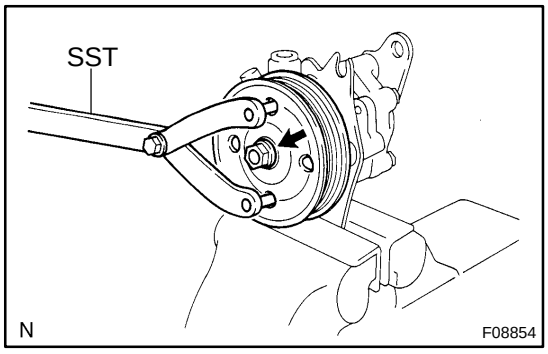

2. REMOVE VANE PUMP PULLEY

(a) Using SST, stop the pulley rotating and loosen the nut.

(b) Remove the nut and vane pump pulley from the vane pump shaft.

SST 09960-10010 (09962-01000, 09963-01000)

3. REMOVE FRONT AND REAR BRACKETS

Remove the 3 bolts, 2 nuts, front and rear brackets.

4. REMOVE SUCTION PORT UNION

(a) Remove the bolt and suction port union.

(b) Remove the O-ring from the suction port union.

5. REMOVE PRESSURE PORT UNION, FLOW CONTROL VALVE AND SPRING

(a) Remove the pressure port union, flow control valve and spring.

(b) Remove the O-ring from the pressure port union.

6. REMOVE REAR HOUSING

(a) Remove the 4 bolts and rear housing.

(b) Remove the 2 O-rings from the rear housing.

7. REMOVE WAVE WASHER

8. REMOVE SIDE PLATE

9. REMOVE GASKET

10. REMOVE CAM RING, 10 VANE PLATES AND VANE PUMP ROTOR

(a) Remove the cam ring and 10 vane plates.

NOTICE:

Take care not to drop the plate.

(b) Using a screwdriver, remove the snap ring and vane pump rotor from the vane pump shaft.

11. REMOVE VANE PUMP SHAFT

12. REMOVE 2 STRAIGHT PINS

Remove the 2 straight pins from the front housing.

SR0RT-02

INSPECTION

NOTICE:

When using a vise, do not overtighten it.

1. MEASURE OIL CLEARANCE BETWEEN VANE PUMP SHAFT AND BUSHING

Using a micrometer and caliper gauge, measure the oil clearance.

Standard clearance:
0.03 - 0.05 mm (0.0012 - 0.0020 in.)
Maximum clearance: 0.07 mm (0.0028 in.)

If it is more than the maximum, replace the front housing and vane pump shaft.

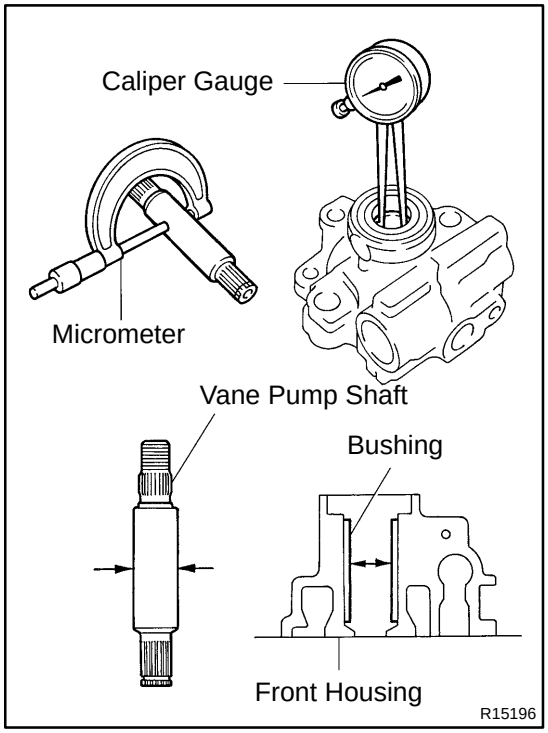

2. INSPECT VANE PUMP ROTOR AND VANE PLATES

(a) Using a micrometer, measure the height, thickness and length of the vane plates.

Minimum height: 8.6 mm (0.339 in.)
Minimum thickness: 1.397 mm (0.0550 in.)
Minimum length: 14.991 mm (0.5902 in.)

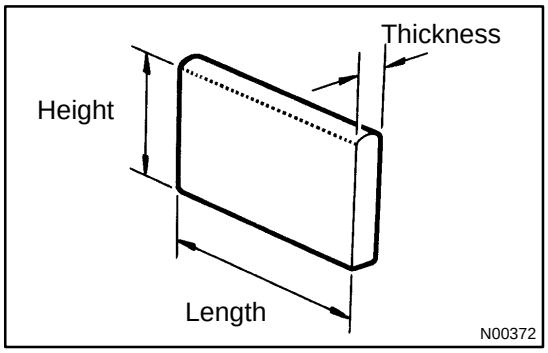

(b) Using a feeler gauge, measure the clearance between the vane pump rotor groove and vane plate.

Maximum clearance: 0.035 mm (0.0014 in.)

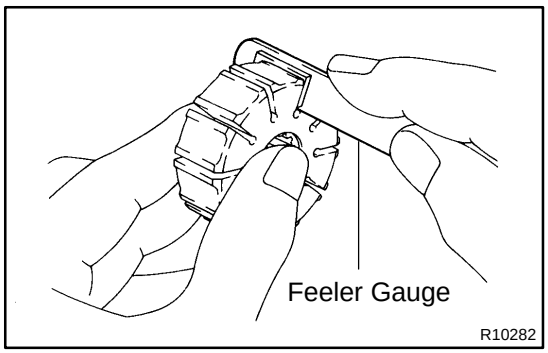

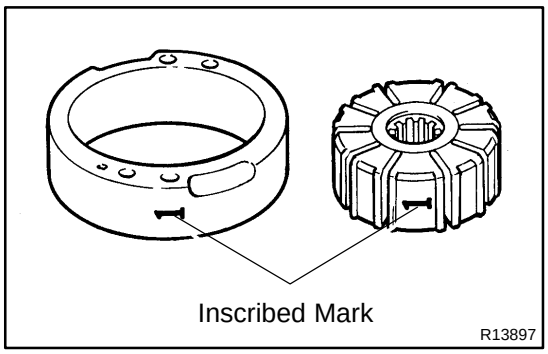

If it is more than the maximum, replace the vane plate and/or vane pump rotor with the one having the same mark stamped on the cam ring.

Inscribed mark: 1, 2, 3, 4 or None

HINT:

There are 5 vane plate lengths with the following vane pump rotor and cam ring marks:

Vane pump rotor and cam ring mark	Vane plate part number	Vane plate length mm (in.)
None	44345-26010	14.999-15.001 (0.59051-0.59059)
1	44345-26020	14.997-14.999 (0.59043-0.59051)
2	44345-26030	14.995-14.997 (0.59035-0.59043)
3	44345-26040	14.993-14.995 (0.59027-0.59035)
4	44345-26050	14.991-14.993 (0.59020-0.59027)

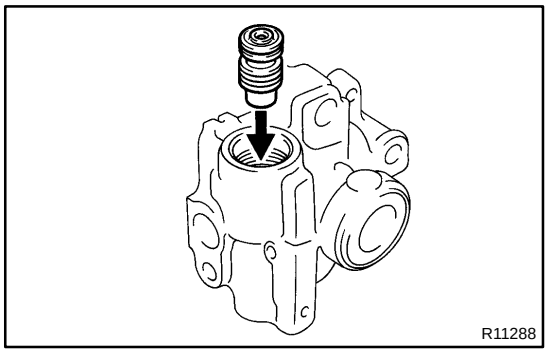

3. INSPECT FLOW CONTROL VALVE

(a) Coat the flow control valve with power steering fluid and check that it falls smoothly into the flow control valve hole by its own weight.

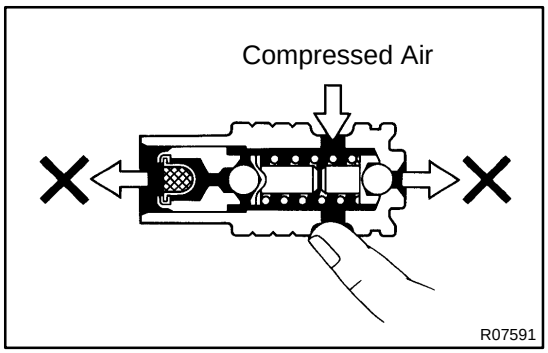

(b) Check the flow control valve for leakage. Close one of the holes and apply 392 - 490 kPa (4 - 5 kgf/cm^2, 57 - 71 psi) of compressed air into the opposite side hole, and confirm that air does not come out from the end holes.

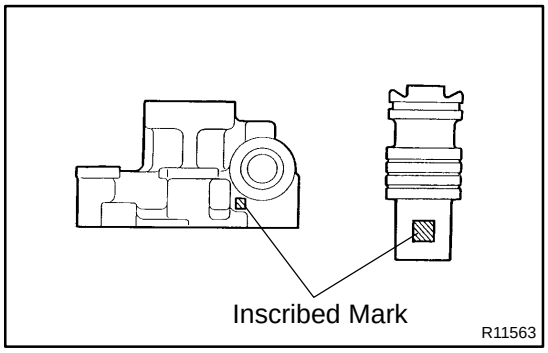

If necessary, replace the flow control valve with the one having the same letter as inscribed on the front housing.

Inscribed Mark: A, B, C, D, E or F

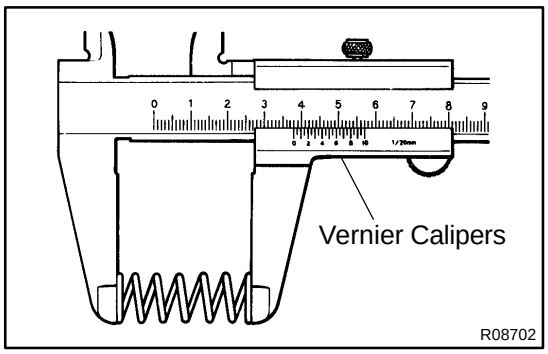

4. INSPECT SPRING

Using vernier calipers, measure the free length of the spring.

Minimum free length: 32.3 mm (1.272 in.)

If it is not within the specification, replace the spring.

SR0ES-07

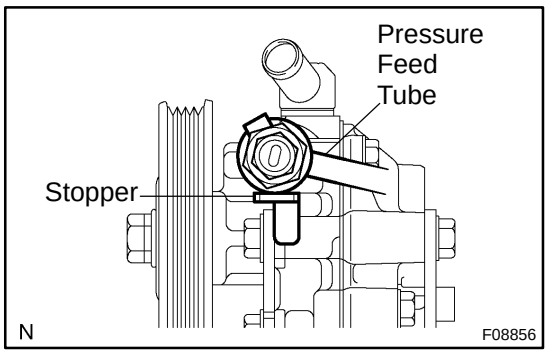

INSTALLATION

1. INSTALL PRESSURE FEED TUBE

Install the pressure feed tube and gasket to the PS vane pump assembly with union bolt.

HINT:

Make sure the stopper of the pressure feed tube touches the front bracket as shown in the illustration, then install the union bolt.

Torque: 52 N·m (530 kgf·cm, 38 ft·lbf)

2. INSTALL OIL PRESSURE SWITCH

Torque: 21 N·m (210 kgf·cm, 15 ft·lbf)

NOTICE:

Be careful to prevent oil seal from being attached to the connector.

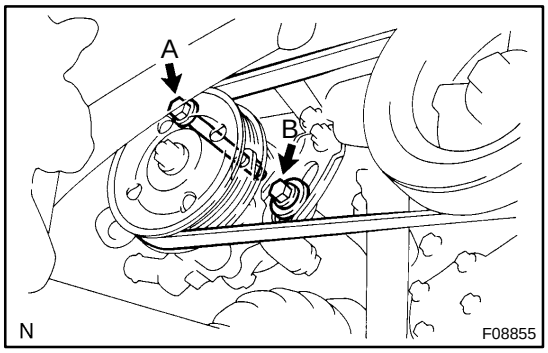

3. INSTALL PS VANE PUMP ASSEMBLY WITH PRESSER FEED TUBE

Temporarily install the PS vane pump assembly with 2 (A and B) bolts.

4. INSTALL DRIVE BELT

(a) Adjust drive belt tension (See page SR-3).

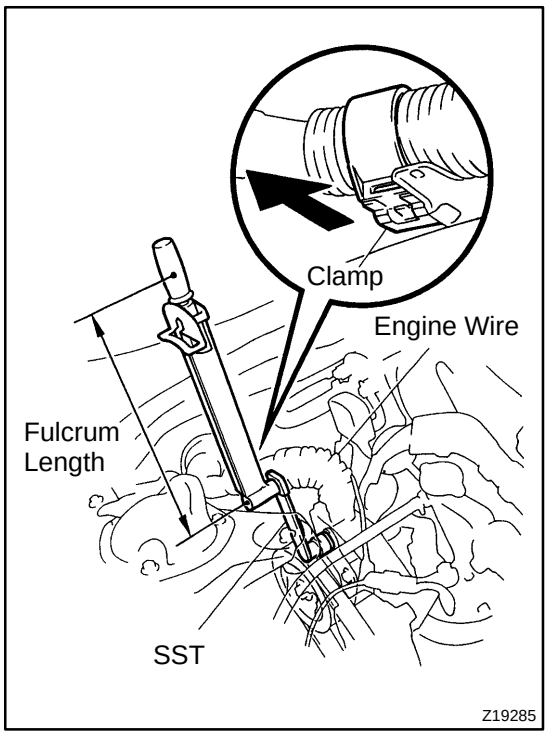

(b) Using SST, torque the bolt A.

SST 09249-63010

Torque: 29 N·m (300 kgf·cm, 22 ft·lbf)

HINT:

★ Use a torque wrench with a fulcrum length of 300 mm (11.81 in.).

★ Disconnect the clamp with engine wire.

(c) Torque the bolt B.

Torque: 43 N·m (440 kgf·cm, 32 ft·lbf)

(d) Connect the connector to the oil pressure switch.

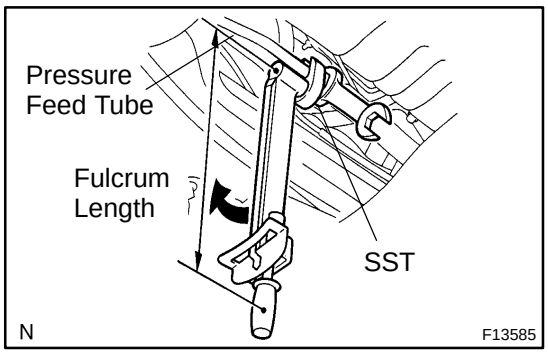

5. CONNECT PRESSURE FEED TUBE

(a) Using a spanner, hold the pressure feed tube steadily and using SST, connect the pressure feed tube.
SST 09023-12700
Torque: 23 N·m (230 kgf·cm, 17 ft·lbf)

HINT:

★ Use a torque wrench with a fulcrum length of 300 mm (11.81 in.).

★ This torque value is effective in case that SST is parallel to a torque wrench.

(b) Install the 2 holders and 2 clamp plates to the pressure feed tube with bolt.

(c) Install the 2 clamp plate with 2 nuts.
Torque: 7.8 N·m (80 kgf·cm, 69 in.·lbf)

6. CONNECT RETURN HOSE

Connect the return hose with the clip.

7. INSTALL FRONT FENDER APRON SEAL RH

Install the front fender apron seal RH with 2 bolts.

8. BLEED POWER STEERING SYSTEM
(See page SR-4)

SR0ER-03

REASSEMBLY

NOTICE:

When using a vise, do not overtighten it.

1. COAT PARTS INDICATED BY ARROWS WITH POWER STEERING FLUID (See page SR-25)

2. INSTALL 2 STRAIGHT PINS

Using a plastic hammer, tap in 2 new straight pins.

NOTICE:

Be careful not to damage the straight pins.

3. INSTALL VANE PUMP SHAFT

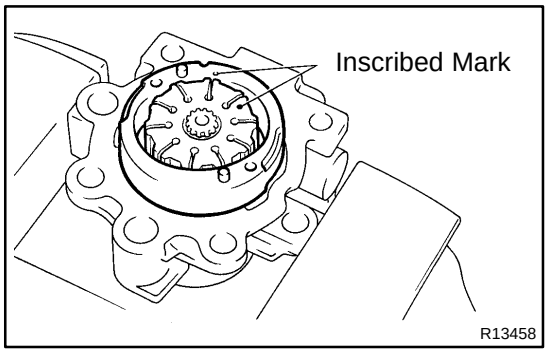

4. INSTALL CAM RING

Align the holes of the cam ring and 2 straight pins, and install the cam ring with the inscribed mark facing outward.

5. INSTALL VANE PUMP ROTOR

(a) Install the vane pump rotor with the inscribed mark facing outward.

(b) Install a new snap ring to the vane pump shaft.

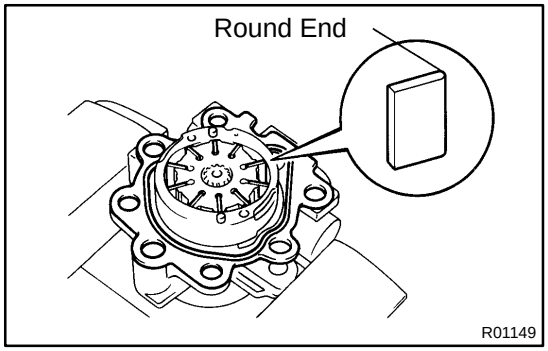

6. INSTALL 10 VANE PLATES

Install the 10 vane plates with the round end facing outward.

7. INSTALL GASKET

Install a new gasket.

8. INSTALL SIDE PLATE

Align the holes of the side plate and 2 straight pins, and install the side plate.

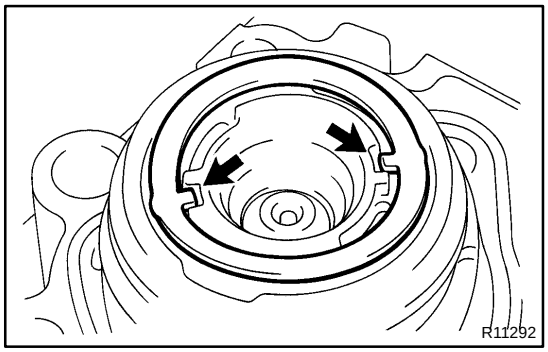

9. INSTALL WAVE WASHER

Install the wave washer so that its protrusions fit into the slots in the side plate.

10. INSTALL REAR HOUSING

(a) Coat 2 new O-rings with power steering fluid and install them to the rear housing.

(b) Install the rear housing with 4 bolts.

Torque: 17 N·m (170 kgf·cm, 12 ft·lbf)

11. INSTALL SPRING, FLOW CONTROL VALVE AND PRESSURE PORT UNION

(a) Install the spring.

(b) Install the flow control valve facing in the correct direction (See page SR-25).

(c) Coat a new O-ring with power steering fluid and install it to the pressure port union.

(d) Install the pressure port union.

Torque: 83 N·m (850 kgf·cm, 62 ft·lbf)

12. INSTALL SUCTION PORT UNION

(a) Coat a new O-ring with power steering fluid and install it to the suction port union.

(b) Install the suction port union with bolt.

Torque: 13 N·m (130 kgf·cm, 9 ft·lbf)

13. INSTALL FRONT AND REAR BRACKETS

Install the front and rear brackets with 3 bolts and 2 nuts.

Torque: 43 N·m (440 kgf·cm, 32 ft·lbf)

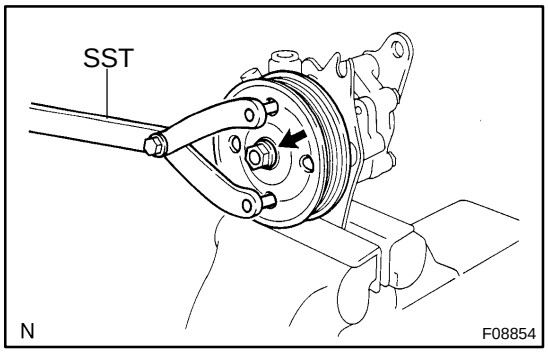

14. INSTALL VANE PUMP PULLEY

(a) Install the vane pump pulley and nut to the vane pump shaft.

(b) Using SST, stop the pulley rotating and torque the nut.

SST 09960-10010 (09962-01000, 09963-01000)

Torque: 44 N·m (450 kgf·cm, 33 ft·lbf)

15. MEASURE PS VANE PUMP ROTATING TORQUE (See page SR-28)

SR0EO-06

REMOVAL

1. REMOVE FRONT FENDER APRON SEAL RH

Remove the 2 bolts and front fender apron seal RH.

2. DISCONNECT RETURN HOSE

Remove the clip and disconnect the return hose.

NOTICE:

Take care not to spill fluid on the drive belt.

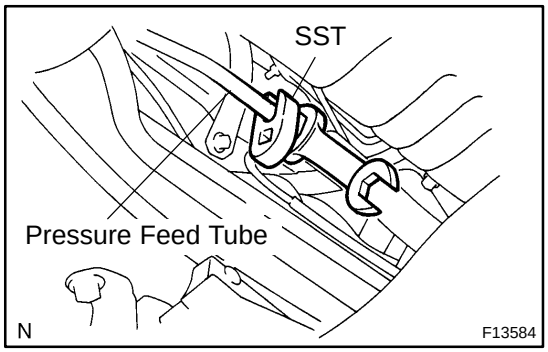

3. DISCONNECT PRESSURE FEED TUBE

(a) Remove the 2 clamp plate set nuts.

(b) Remove the bolt, 2 clamp plates and 2 holders from the pressure feed tube.

(c) Using a spanner, hold the pressure feed tube steadily and using SST, disconnect the pressure feed tube.

SST 09023-12700

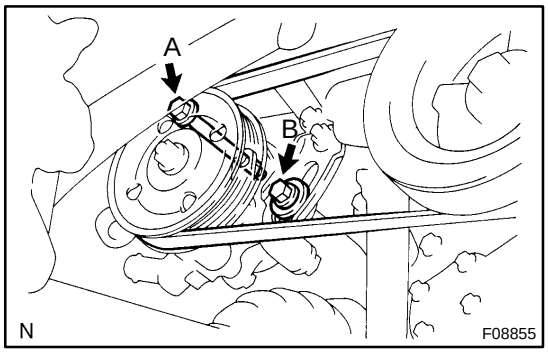

4. REMOVE DRIVE BELT

Loosen the 2 (A and B) bolts and drive belt.

5. REMOVE PS VANE PUMP ASSEMBLY WITH PRESSURE FEED TUBE

(a) Disconnect the connector from the oil pressure switch.

(b) Loosen the bolt A sufficiently so that pump assembly can be removed.

HINT:

Bolt A cannot be removed.

(c) Remove the bolt B and PS vane pump assembly.

6. REMOVE OIL PRESSURE SWITCH

NOTICE:

Be careful not to drop the switch.

If the switch is dropped or strongly damaged, replace it with a new one.

7. REMOVE PRESSURE FEED TUBE

(a) Remove the oil pressure switch from the union bolt.

(b) Remove the union bolt, gasket and pressure feed tube.

SR0RU-02

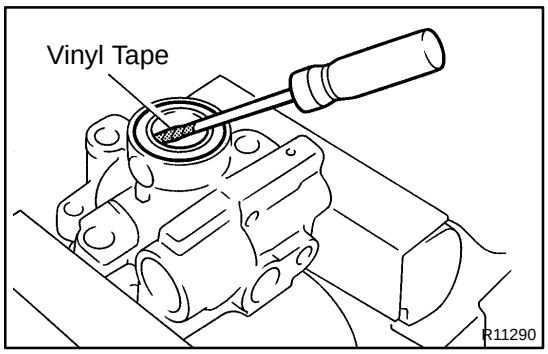

REPLACEMENT

NOTICE:

When using a vise, do not overtighten it.

IF NECESSARY, REPLACE OIL SEAL

(a) Using a screwdriver with vinyl tape wound around its tip, remove the oil seal.

NOTICE:

Be careful not to damage the front housing.

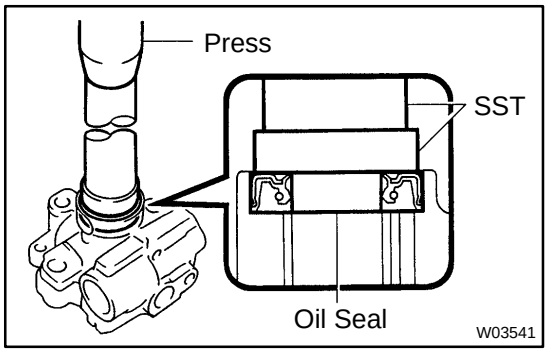

(b) Coat a new oil seal lip with power steering fluid.

(c) Using SST, press in the oil seal.

SST 09950-60010 (09951-00330),
09950-70010 (09951-07100)

NOTICE:

Make sure that the oil seal is installed facing in the correct direction.

STEERING SYSTEM

SR0EB-02

PRECAUTION

★ **Care must be taken to replace parts properly because they could affect the performance of the steering system and result in a driving hazard.**

★ **The AVALON is equipped with SRS (Supplemental Restraint System) such as the driver airbag and front passenger airbag. Failure to carry out service operation in the correct sequence could cause the SRS to unexpectedly deploy during servicing, possibly leading to a serious accident. Before servicing (including removal or installation of parts, inspection or replacement), be sure to read the precautionary notices in the RS section.**

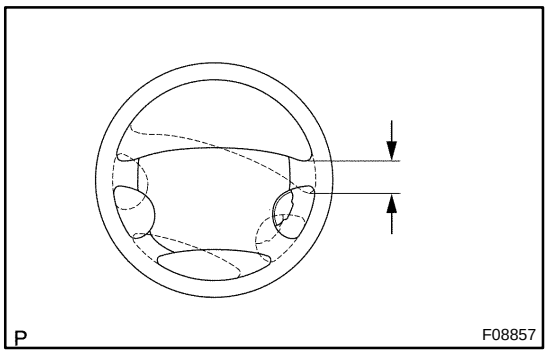

STEERING WHEEL

SR0EG-05

INSPECTION

1. CHECK STEERING WHEEL FREEPLAY

(a) Stop the vehicle and face the tires straight ahead.

(b) Rock the steering wheel gently up and down with a finger lightly, check the steering wheel freeplay.

Maximum freeplay: 30 mm (1.18 in.)

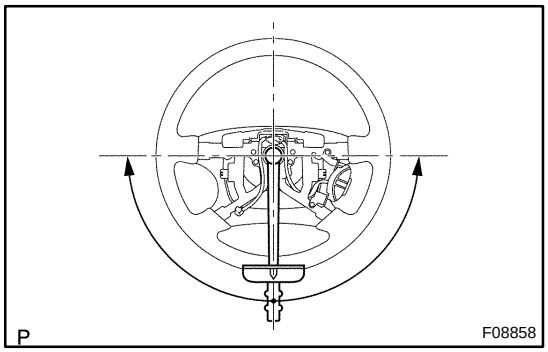

2. CHECK STEERING EFFORT

(a) Center the steering wheel.

(b) Remove the steering wheel pad (See page SR-12).

(c) Start the engine and run it at idle.

(d) Measure the steering effort in both directions.

Steering effort (Reference)

5.9 N·m (60 kgf·cm, 52 in.·lbf)

HINT:

Take the tire type, pressure and contact surface into consideration before making your diagnosis.

(e) Torque the steering wheel set nut.

Torque: 50 N·m (510 kgf·cm, 37 ft·lbf)

(f) Install the steering wheel pad (See page SR-22).

TROUBLESHOOTING

SR0EC-02

PROBLEM SYMPTOMS TABLE

Use the table below to help you find the cause of the problem. The numbers indicate the priority of the likely cause of the problem. Check each part in order. If necessary, repair or replace these parts.

Symptom	Suspect Area	See page
Hard steering	1. Tires (Improperly inflated)	SA-2
	2. Power steering fluid level (Low)	SR-5
	3. Drive belt (Loose)	SR-3
	4. Front wheel alignment (Incorrect)	SA-4
	5. Steering system joints (Worn)	-
	6. Suspension arm ball joints (Worn)	SA-38
	7. Steering column (Binding)	-
	8. Power steering vane pump	SR-25
	9. Power steering gear	SR-37
Poor return	1. Tires (Improperly inflated)	SA-2
	2. Front wheel alignment (Incorrect)	SA-4
	3. Steering column (Binding)	-
	4. Power steering gear	SR-37
Excessive play	1. Steering system joints (Worn)	-
	2. Suspension arm ball joints (Worn)	SA-38
	3. Universal joint, Intermediate shaft, Sliding yoke (Worn)	-
	4. Front wheel bearing (Worn)	SA-9
	5. Power steering gear	SR-37
Abnormal noise	1. Power steering fluid level (Low)	SR-5
	2. Steering system joints (Worn)	-
	3. Power steering vane pump	SR-25
	4. Power steering gear	SR-37

TILT STEERING COLUMN

COMPONENTS

SR0EH-06

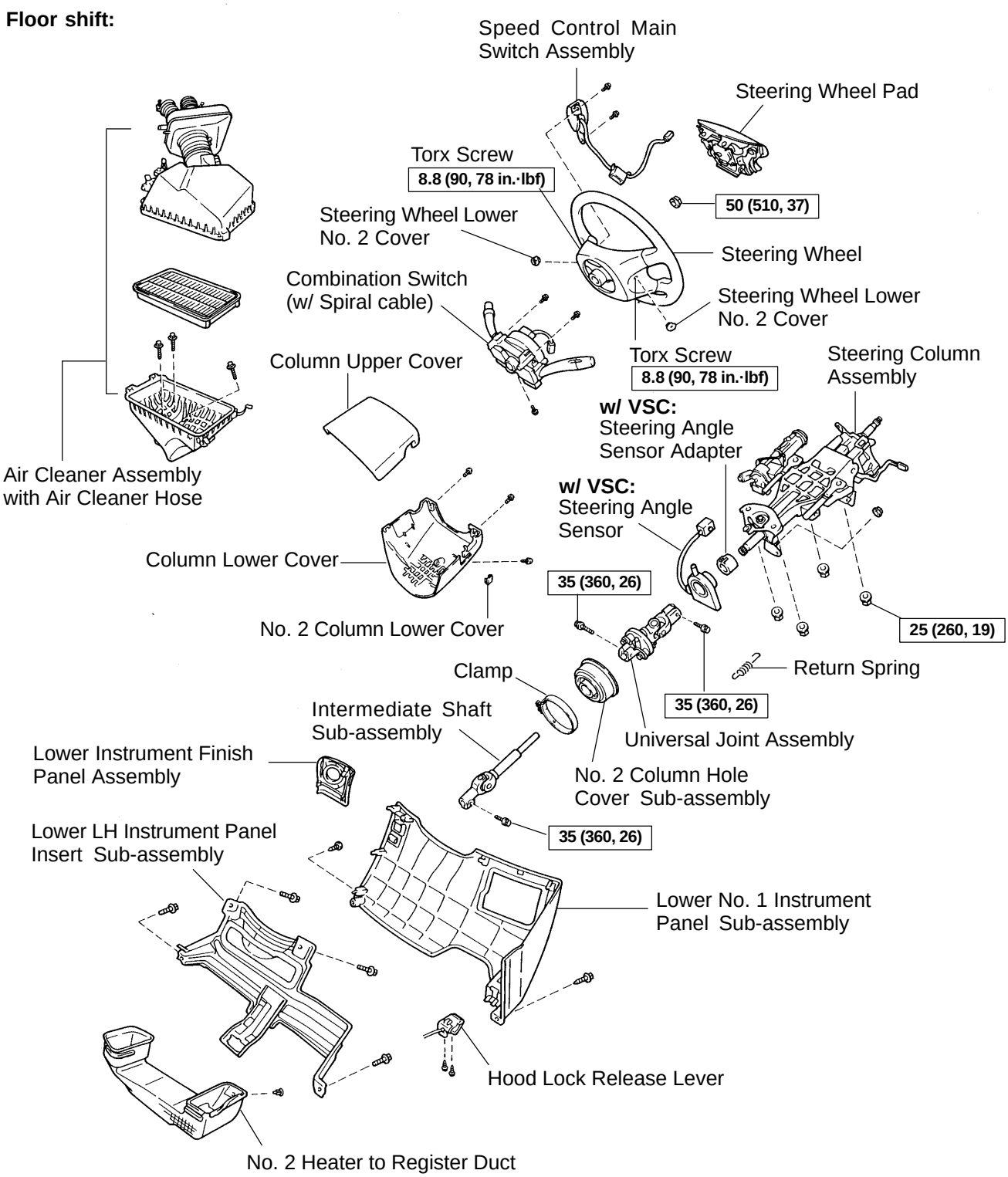

N·m (kgf·cm, ft·lbf) : Specified torque

N

F08837

Column shift:

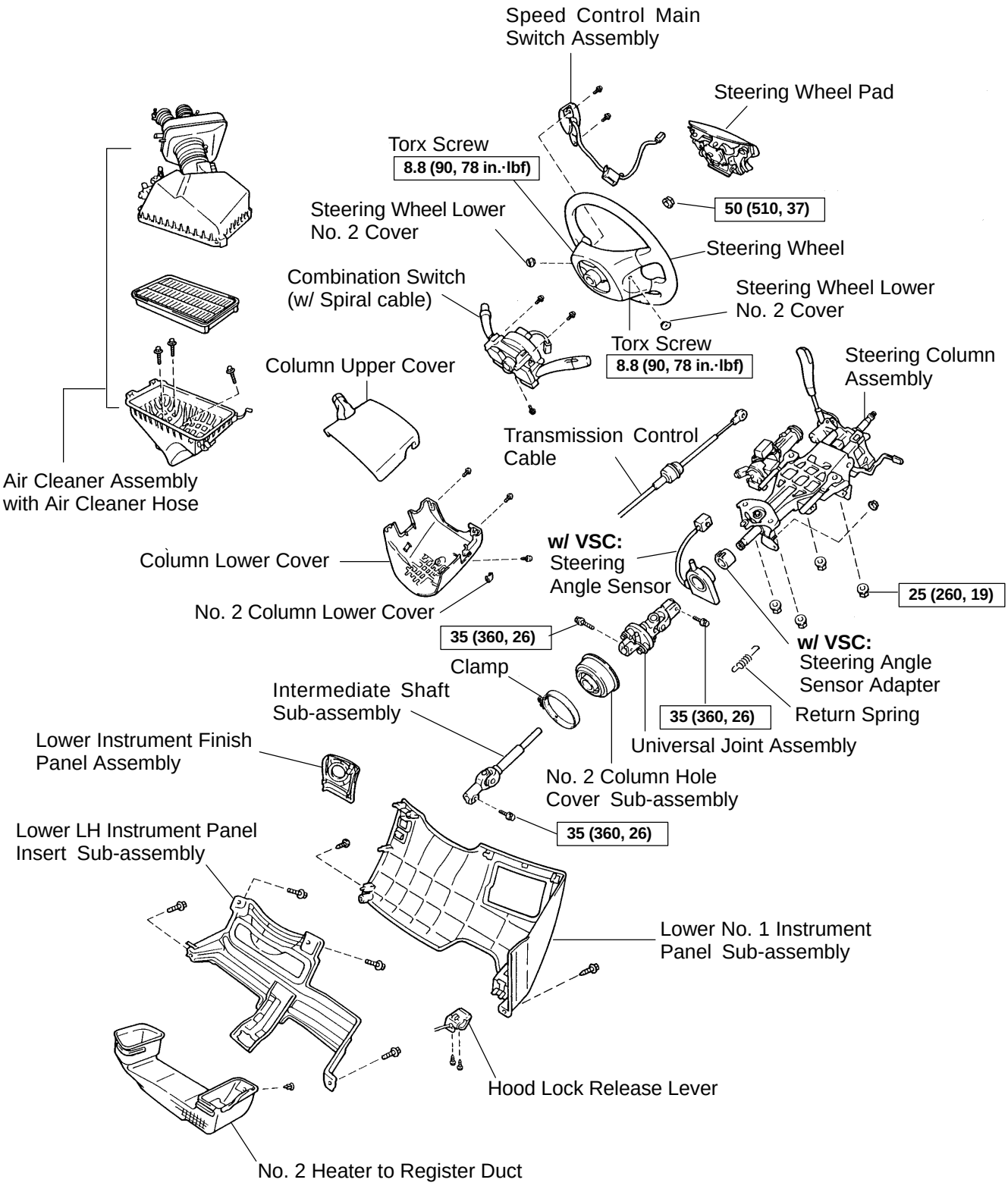

N·m (kgf·cm, ft·lbf) : Specified torque

N

F08849

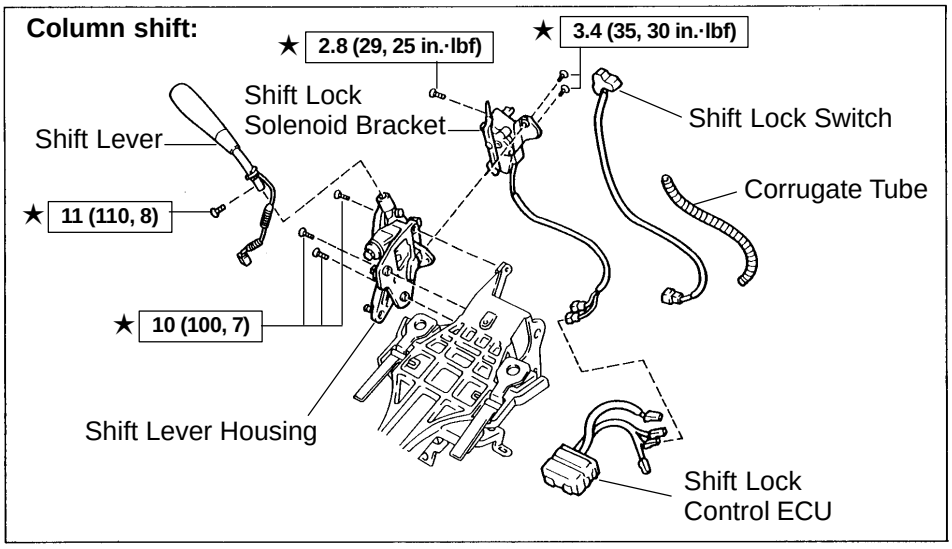

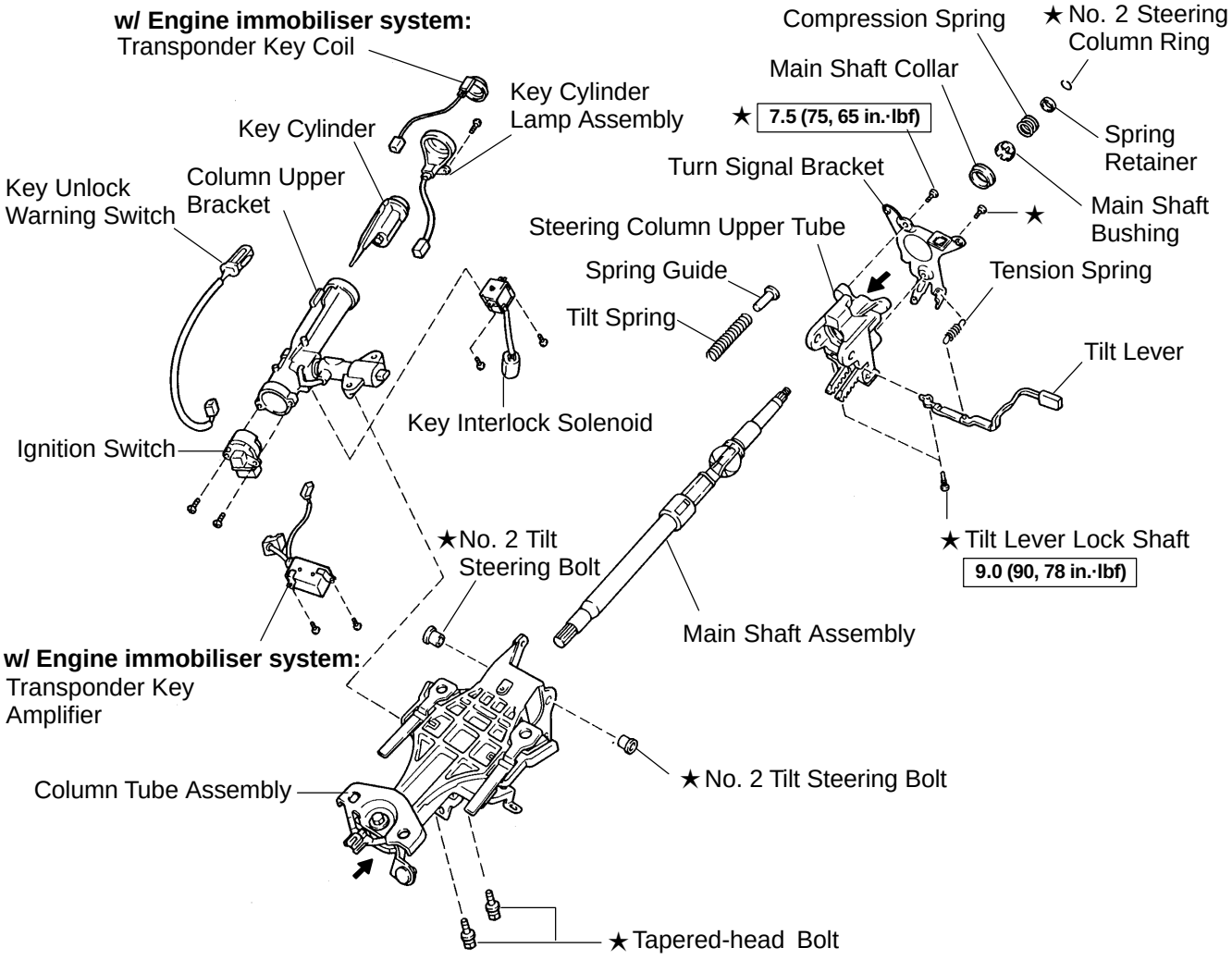

N·m (kgf·cm, ft·lbf) : Specified torque
★ Non-reusable part
⬅ Molybdenum disulfide lithium base grease

N

F09909

SR0Z5-01

DISASSEMBLY

NOTICE:

When using a vise, do not overtighten it.

1. w/ Engine immobiliser system:
REMOVE TRANSPONDER KEY COIL

2. REMOVE KEY CYLINDER LAMP ASSEMBLY

Remove the screw and key cylinder lamp assembly.

3. Column shift:
REMOVE SHIFT LOCK CONTROL ECU

Disconnect the 3 connectors and remove the shift lock control ECU.

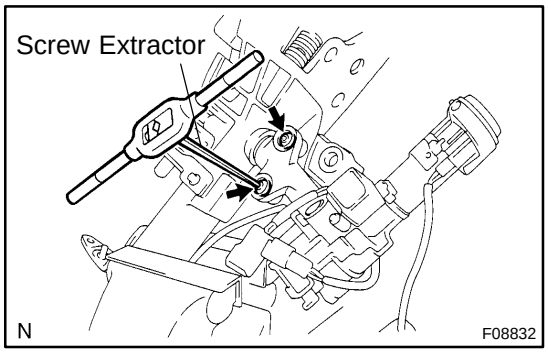

4. REMOVE COLUMN UPPER BRACKET

(a) Using a centering punch, mark the center of the 2 tapered-head bolts.
(b) Using a 3 - 4 mm (0.12 - 0.16 in.) drill, drill into the 2 bolts.
(c) Using a screw extractor, remove the 2 bolts and column upper bracket.

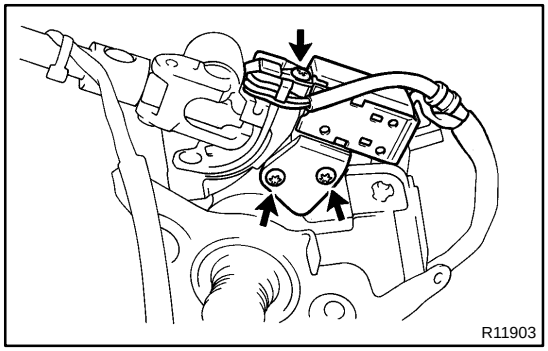

5. Column shift:
REMOVE SHIFT LEVER HOUSING

(a) Remove the torx screw and shift lock switch.
(b) Remove the 2 torx screws and shift lock solenoid bracket.
(c) Remove the torx screw and shift lever.

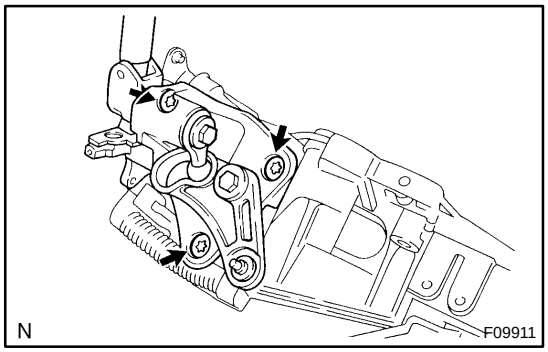

(d) Remove the 3 torx screws and shift lever housing.

6. REMOVE TURN SIGNAL BRACKET

(a) Remove the tension spring.
(b) Remove the 2 torx screws and turn signal bracket.

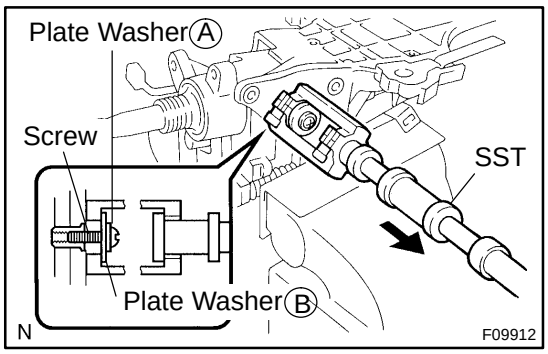

7. REMOVE STEERING COLUMN UPPER TUBE WITH MAIN SHAFT ASSEMBLY

(a) Set SST, plate washer (18 and 36 mm outer diameter) and screw (4.0 mm diameter, 0.7 mm pitch, 15.0 mm length), as shown in the illustration. And then remove the 2 No. 2 tilt steering bolts.
SST 09910-00015 (09911-0001 1, 09912-00010)
Reference:
Plate washer A (18 mm): 90562-04012
Plate washer B (36 mm): 90201-10201
Screw: 90154-40015

(b) Remove the column upper tube with the main shaft assembly from the column tube assembly.

NOTICE:
Do not bend the universal joint of the main shaft assembly more than 20˚.

(c) Remove tilt spring and spring guide.

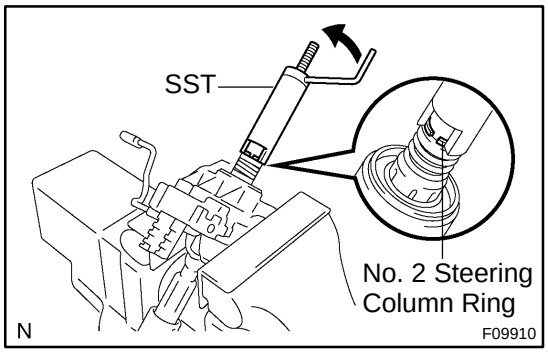

8. REMOVE MAIN SHAFT ASSEMBLY

(a) Install SST to the main shaft assembly, as shown in the illustration.
SST 09612-07010

(b) Using SST, compress the compression spring.

NOTICE:
Do not bend the universal joint of the main shaft assembly more than 20˚.

HINT:
Hold the main shaft assembly with your hand so that it does not rotate.

(c) Using a screwdriver, remove the No. 2 steering column ring.

(d) Remove the spring retainer, compression spring, main shaft bushing and main shaft collar.

9. REMOVE TILT LEVER

Remove the tilt lever lock shaft and tilt lever.

SR0Z6-01

INSPECTION

1. INSPECT STEERING LOCK OPERATION

Check that the steering lock mechanism operates properly.

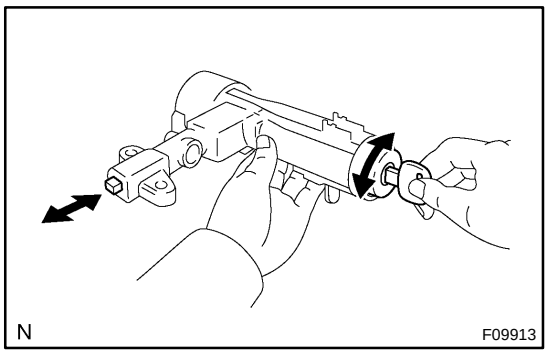

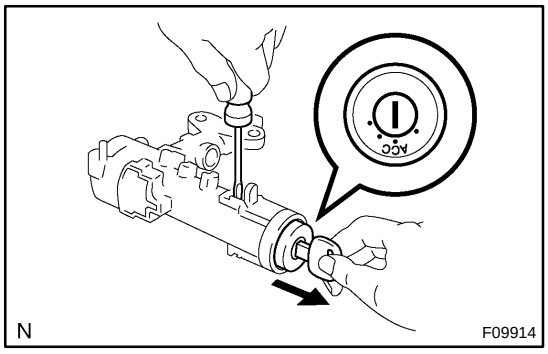

2. IF NECESSARY, REPLACE KEY CYLINDER

(a) Place the ignition key at the ACC position.

(b) Push down the stop pin with a screwdriver, and pull out the key cylinder.

(c) Install a new key cylinder.

HINT:

Make sure the ignition key is at the ACC position.

3. INSPECT IGNITION SWITCH (See page BE-16)

4. IF NECESSARY, REPLACE IGNITION SWITCH

(a) Remove the 2 screws and ignition switch.

(b) Install a new ignition switch with the 2 screws.

5. INSPECT KEY UNLOCK WARNING SWITCH (See page BE-16)

6. IF NECESSARY, REPLACE KEY UNLOCK WARNING SWITCH

(a) Slide the key unlock warning switch out of the column upper bracket.

(b) Slide a new key unlock warning switch in the column upper bracket.

7. INSPECT KEY INTERLOCK SOLENOID (See page AX-16 and AX-18)

8. IF NECESSARY, REPLACE KEY INTERLOCK SOLENOID

(a) Remove the 2 screws and key interlock solenoid.

(b) Install a new key interlock solenoid with the 2 screws.

9. Column shift: INSPECT SHIFT LOCK SOLENOID, SHIFT LOCK SWITCH AND SHIFT LOCK CONTROL ECU (See page AX-18)

10. Column shift: IF NECESSARY, REPLACE SHIFT LOCK SOLENOID, SHIFT LOCK SWITCH AND SHIFT LOCK CONTROL ECU

11. w/ Engine immobiliser system: INSPECT TRANSPONDER KEY COIL (See page BE-181)

12. w/ Engine immobiliser system: IF NECESSARY, REPLACE TRANSPONDER KEY COIL

13. w/ Engine immobiliser system:
IF NECESSARY, REPLACE TRANSPONDER KEY AMPLIFIER

(a) Remove the 2 screws and transponder key amplifier.

(b) Install a new transponder key amplifier with the 2 screws.

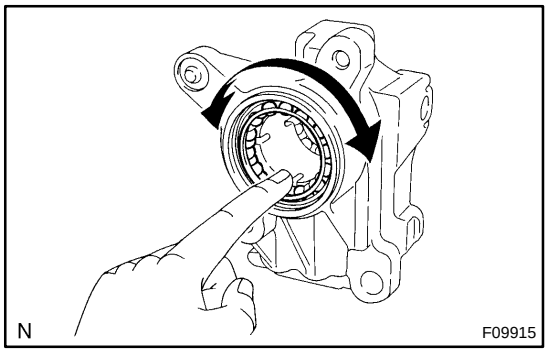

14. INSPECT BEARING

Check the bearing rotation condition and check for abnormal noise.

If faulty, replace the steering column upper tube sub-assembly.

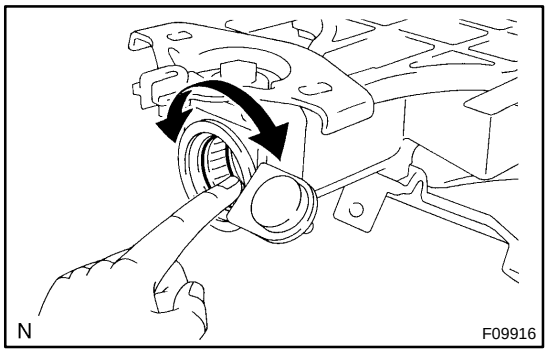

15. INSPECT BUSHING

Check the bushing rotation condition and check for abnormal noise.

If faulty, replace the steering column assembly.

SR0Z8-02

INSTALLATION

1. INSTALL SPEED CONTROL MAIN SWITCH ASSEMBLY TO STEERING WHEEL

Install the speed control main switch assembly with the 2 screws to the steering wheel.

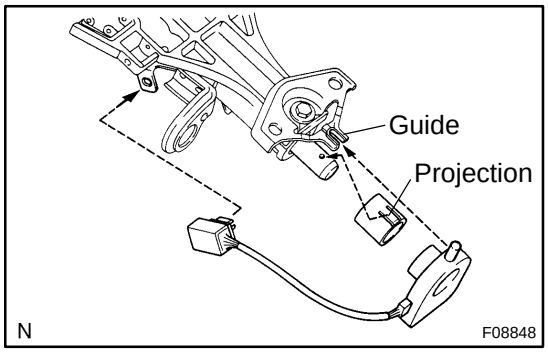

2. w/ VSC:
INSTALL STEERING ANGLE SENSOR ADAPTER AND STEERING ANGLE SENSOR

(a) Fit a projection of the steering angle sensor adapter into a hole in the steering column shaft.

(b) Set a projection of the steering angle sensor in the guide of the steering column and fix the steering angle sensor.

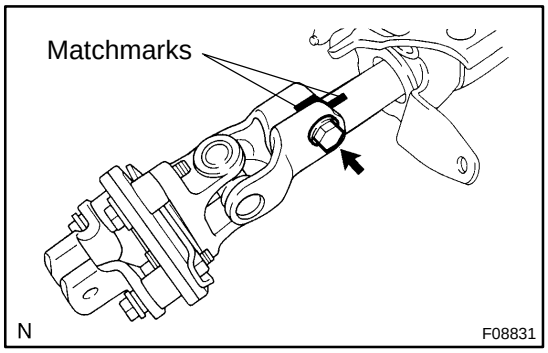

3. INSTALL UNIVERSAL JOINT ASSEMBLY

(a) Align the matchmarks on the universal joint assembly and main shaft assembly.

(b) Install the bolt.
Torque: 35 N·m (360 kgf·cm, 26 ft·lbf)

4. INSTALL NO. 2 COLUMN HOLE COVER SUB- ASSEMBLY AND INTERMEDIATE SHAFT SUB- ASSEMBLY

(a) Install the No. 2 column hole cover sub-assembly.

(b) Temporarily install the intermediate shaft sub-assembly with the bolt A.

5. INSTALL STEERING COLUMN ASSEMBLY

(a) Install the steering column assembly with the 4 nuts.
Torque: 25 N·m (260 kgf·cm, 19 ft·lbf)

(b) Connect the connectors.

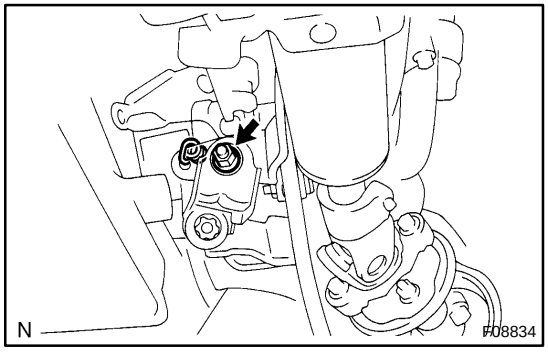

(c) Install the nut and return spring.

6. Column shift:
CONNECT TRANSMISSION CONTROL CABLE

(a) Connect the transmission control cable to the cable bracket of the column tube.

(b) Connect the transmission control cable to the shift lever housing.

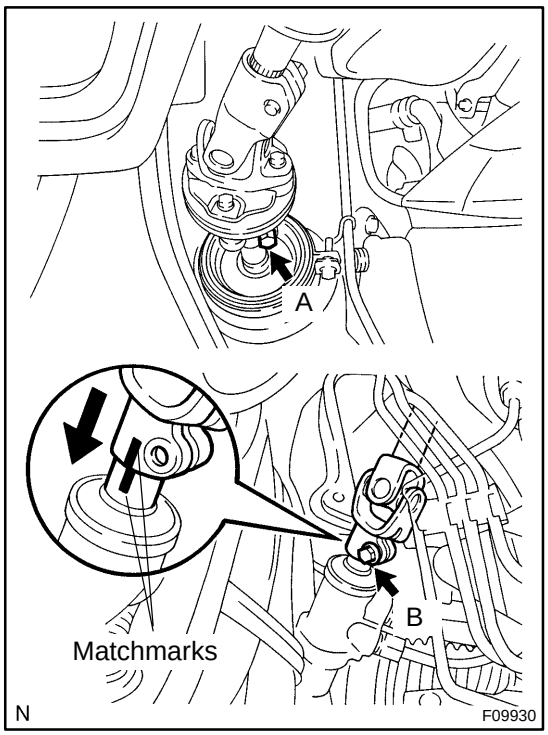

7. CONNECT INTERMEDIATE SHAFT SUB-ASSEMBLY

(a) Align the matchmarks on the intermediate shaft sub-assembly and control valve shaft.

(b) Install the bolt B.

Torque: 35 N·m (360 kgf·cm, 26 ft·lbf)

(c) Torque the bolt A.

Torque: 35 N·m (360 kgf·cm, 26 ft·lbf)

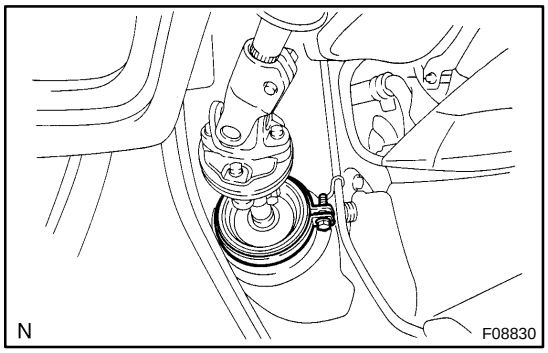

(d) Connect the No. 2 column hole cover sub-assembly and tighten the clamp.

8. INSTALL AIR CLEANER ASSEMBLY WITH AIR CLEANER HOSE

(a) Install the air cleaner assembly with air cleaner hose with the 3 bolts.

(b) Connect the connectors.

(c) Tighten the hose clamps.

9. INSTALL LOWER INSTRUMENT FINISH PANEL ASSEMBLY

10. INSTALL SPIRAL CABLE (See page BE-18)

11. INSTALL COMBINATION SWITCH WITH SPIRAL CABLE

(a) Install the combination switch with spiral cable with the 3 screws.

(b) Connect the airbag connector.

(c) Connect the connectors.

12. INSTALL NO. 2 COLUMN LOWER COVER, COLUMN UPPER AND LOWER COVERS

(a) Install the column upper and lower covers with the 3 screws.

(b) Install the No. 2 column lower cover.

13. INSTALL NO. 2 HEATER TO REGISTER DUCT

Install the No. 2 heater to register duct with the clip.

14. INSTALL LOWER LH INSTRUMENT PANEL INSERT SUB-ASSEMBL Y

(a) Install the lower LH instrument panel insert sub-assembly with the 4 bolts.

(b) Connect the connectors.

15. INSTALL LOWER NO. 1 INSTRUMENT PANEL SUB-ASSEMBLY

(a) Connect the connectors and install the lower No. 1 instrument panel sub-assembly.
(b) Install the 2 screws.
(c) Connect the hood lock release lever with the 2 screws.

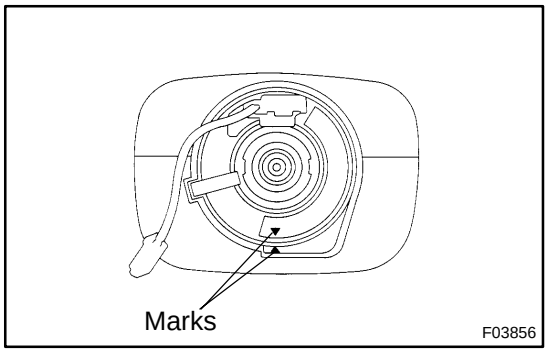

16. CENTER SPIRAL CABLE

(a) Check that the front wheels are facing straight ahead.
(b) Turn the spiral cable counterclockwise by hand until it becomes harder to turn.
(c) Then rotate the spiral cable clockwise about 2.5 turns to align the marks.

HINT:
The spiral cable will rotate about 2.5 turns to either left or right of the center.

17. INSTALL STEERING WHEEL

(a) Align the matchmarks on the steering wheel and main shaft assembly.
(b) Install the steering wheel set nut.
Torque: 50 N·m (510 kgf·cm, 37 ft·lbf)
(c) Connect the connector.

18. INSTALL STEERING WHEEL PAD

NOTICE:

- ★ **Never use airbag parts from another vehicle. When replacing parts, replace with new ones.**
- ★ **Make sure the wheel pad is installed to the specified torque.**
- ★ **If the wheel pad has been dropped, or there are cracks, dents or other defects on the case or connector, replace the wheel pad with a new one.**
- ★ **When installing the wheel pad, take care that the wirings do not interfere with other parts and are not pinched between other parts.**

(a) Connect the airbag connector.

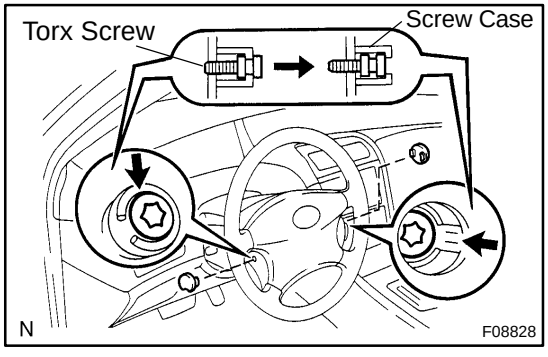

(b) Install the steering wheel pad after confirming that the circumference groove of the torx screws is caught on the screw case.
(c) Using a torx socket wrench, install the 2 screws.
Torque: 8.8 N·m (90 kgf·cm, 78 in.·lbf)
(d) Install the 2 steering wheel lower No. 2 covers.

19. CHECK STEERING WHEEL CENTER POINT

20. w/ VSC:
PERFORM STEERING ANGLE SENSOR ZERO POINT CALIBRATION (See page DI-252)

SR0Z7-01

REASSEMBLY

NOTICE:

When using a vise, do not overtighten it.

1. COAT PARTS INDICATED BY ARROWS WITH MOLYBDENUM DISULFIDE LITHIUM BASE GREASE
(See page SR-9)

2. INSTALL TILT LEVER

Install the tilt lever with a new tilt lever lock shaft.

Torque: 9.0 N·m (90 kgf·cm, 78 in.·lbf)

3. INSTALL MAIN SHAFT ASSEMBLY

(a) Install the main shaft collar, main shaft bushing, compression spring and spring retainer.

(b) Install a new No. 2 steering column ring to the main shaft assembly.

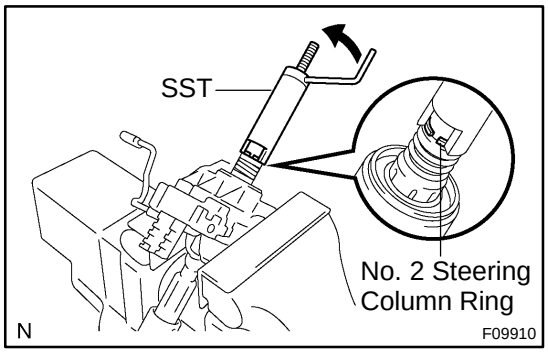

(c) Install SST to the main shaft assembly, as shown in the illustration.
SST 09612-07010

(d) Using SST, push down the No. 2 steering column ring until it fits into the shaft groove and install the main shaft assembly.

NOTICE:

Do not bend the universal joint of the shaft assembly more than 20˚.

HINT:

Hold the main shaft assembly with your hand so that it does not rotate.

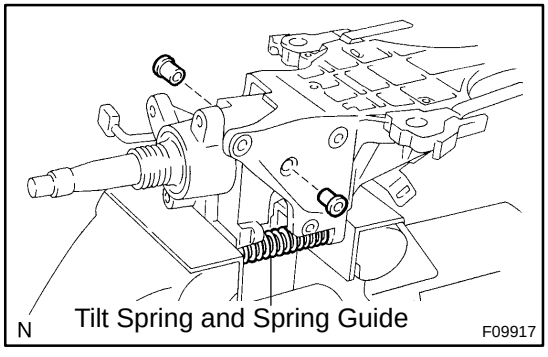

4. INSTALL STEERING COLUMN UPPER TUBE WITH MAIN SHAFT ASSEMBLY

(a) Install the steering column upper tube with the main shaft assembly into the column tube assembly.

(b) Install the tilt spring and spring guide.

(c) Using a vise to hold the steering column upper tube.

(d) Temporarily install 2 new No. 2 tilt steering bolts.

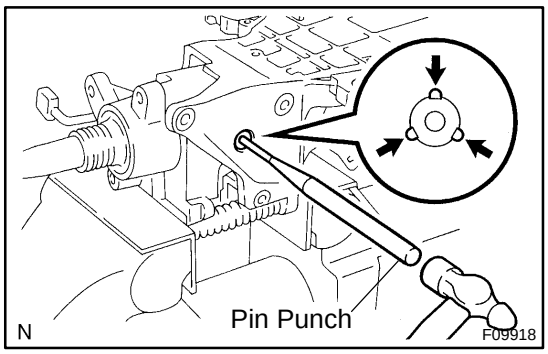

(e) Using a punch and a hammer, tap in the No. 2 tilt steering bolt.
(f) Using a pin punch, stake on 3 places evenly around the hole as shown in the illustration.

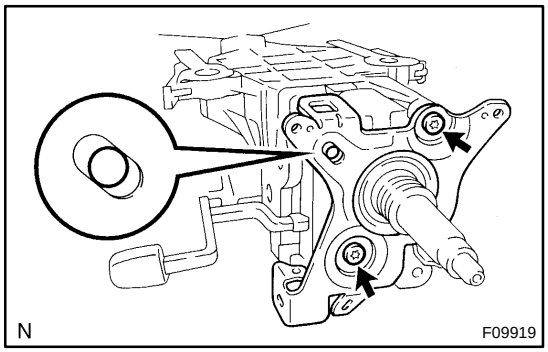

5. INSTALL TURN SIGNAL BRACKET
(a) Install the turn signal bracket with 2 new torx screws.
Torque: 7.5 N·m (75 kgf·cm, 65 in.·lbf)

HINT:
Set the hole of the turn signal bracket and projection of steering column upper tube.

(b) Install the tension spring.

6. Column shift:
INSTALL SHIFT LEVER HOUSING
(a) Install the shift lever housing with 3 new torx screws.
Torque: 10 N·m (100 kgf·cm, 7 ft·lbf)
(b) Install the shift lever with a new torx screw.
Torque: 11 N·m (110 kgf·cm, 8 ft·lbf)
(c) Install the shift lock solenoid bracket with 2 new torx screws.
Torque: 3.4 N·m (35 kgf·cm, 30 in.·lbf)
(d) Install the shift lock switch with a new torx screw.
Torque: 2.8 N·m (29 kgf·cm, 25 in.·lbf)

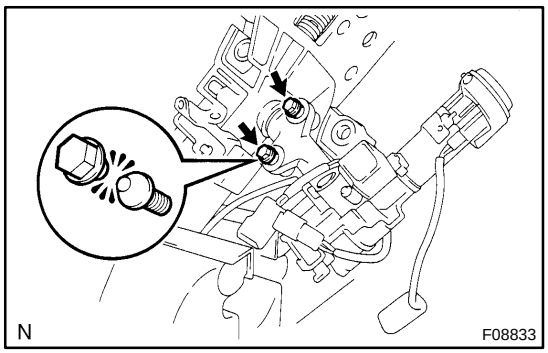

7. INSTALL COLUMN UPPER BRACKET
(a) Install the column upper bracket with 2 new tapered-head bolts.
(b) Tighten the tapered-head bolts until the bolt heads break off.

8. Column shift:
INSTALL SHIFT LOCK CONTROL ECU
Install the shift lock control ECU and connect the 3 connectors.

9. INSTALL KEY CYLINDER LAMP ASSEMBLY
Install the key cylinder lamp assembly with screw.

10. w/ Engine immobiliser system:
INSTALL TRANSPONDER KEY COIL

SR0Z4-01

REMOVAL

1. REMOVE STEERING WHEEL PAD

NOTICE:

If the airbag connector is disconnected with the ignition switch at ON or ACC, DTCs will be recorded.

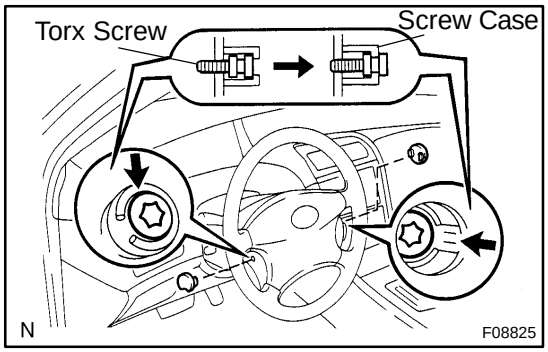

(a) Place the front wheels facing straight ahead.

(b) Remove the 2 steering wheel lower No. 2 covers.

(c) Using a torx socket wrench, loosen the 2 torx screws.

HINT:

Loosen the 2 screws until the groove along the screw circumference catches on the screw case.

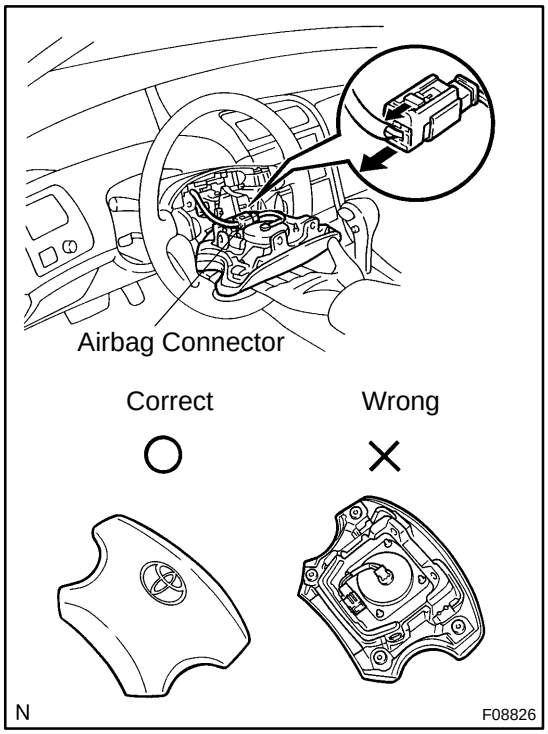

(d) Pull out the wheel pad from the steering wheel and disconnect the airbag connector.

CAUTION:

- ★ **When storing the wheel pad, keep the upper surface of the pad facing upward.**
- ★ **Never disassemble the wheel pad.**

NOTICE:

When removing the wheel pad, take care not to pull the airbag wire harness.

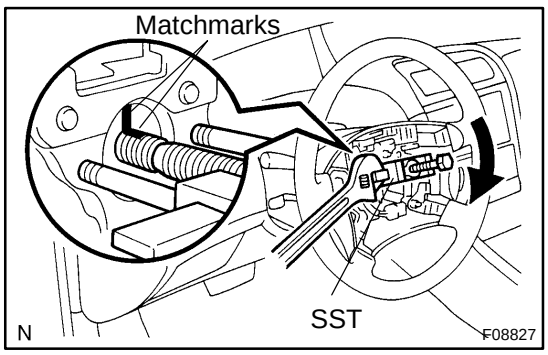

2. REMOVE STEERING WHEEL

(a) Disconnect the connector.

(b) Remove the steering wheel set nut.

(c) Place matchmarks on the steering wheel and main shaft assembly.

(d) Using SST, remove the steering wheel.

SST 09950- 50012 (09951- 05010, 09952- 05010, 09953-05020, 09954-05020)

3. REMOVE LOWER NO. 1 INSTRUMENT PANEL SUB-ASSEMBLY

(a) Remove the 2 screws and disconnect the hood lock release lever.

(b) Remove the 2 screws.

(c) Disconnect the connectors and remove the lower No. 1 instrument panel sub-assembly.

4. REMOVE LOWER LH INSTRUMENT PANEL INSERT SUB-ASSEMBL Y

(a) Disconnect the connectors.

(b) Remove the 4 bolts and lower LH instrument panel insert sub-assembly .

5. REMOVE NO. 2 HEATER TO REGISTER DUCT

Remove the clip and No. 2 heater to register duct.

6. REMOVE NO. 2 COLUMN LOWER COVER, COLUMN UPPER AND LOWER COVERS

(a) Remove the No. 2 column lower cover.

(b) Remove the 3 screws, column upper and lower covers.

7. REMOVE COMBINATION SWITCH WITH SPIRAL CABLE

(a) Disconnect the connectors.

(b) Disconnect the airbag connector.

(c) Remove the 3 screws and combination switch with spiral cable.

8. REMOVE SPIRAL CABLE (See page BE-18)

NOTICE:

Do not disassemble the spiral cable or apply oil to it.

9. REMOVE LOWER INSTRUMENT FINISH PANEL ASSEMBLY

10. REMOVE AIR CLEANER ASSEMBLY WITH AIR CLEANER HOSE

(a) Loosen the hose clamps.

(b) Disconnect the connectors.

(c) Remove the 3 bolts and air cleaner assembly with air cleaner hose.

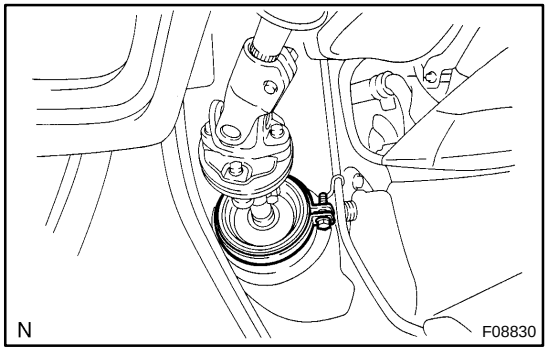

11. DISCONNECT INTERMEDIATE SHAFT SUB- ASSEMBLY

(a) Loosen the clamp and disconnect the No. 2 column hole cover sub-assembly.

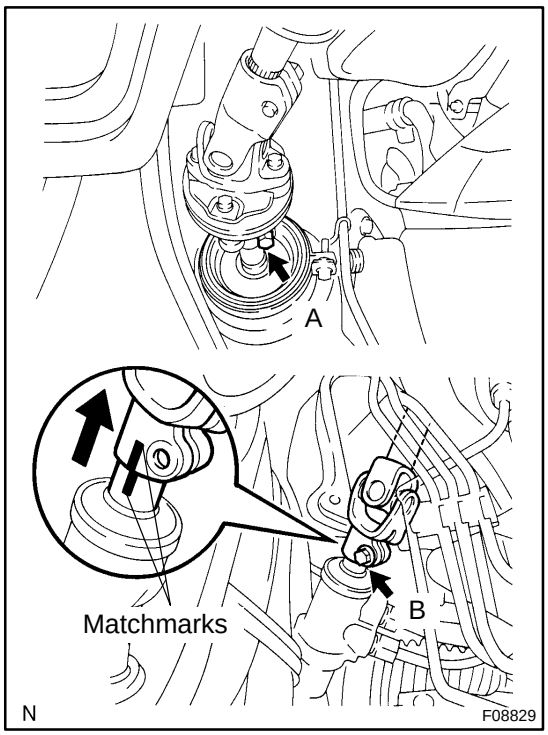

(b) Place matchmarks on the intermediate shaft sub-assembly and control valve shaft.
(c) Loosen the bolt A and remove the bolt B, then disconnect the intermediate shaft sub-assembly.

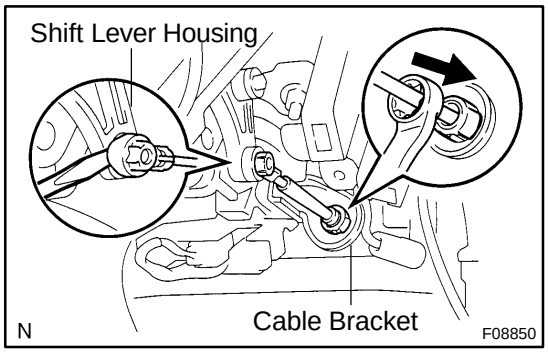

12. Column shift:
DISCONNECT TRANSMISSION CONTROL CABLE
(a) Using a screwdriver, disconnect the transmission control cable from the shift lever housing.
(b) Using a offset wrench (23mm), disconnect the transmission control cable from the cable bracket of the column tube.

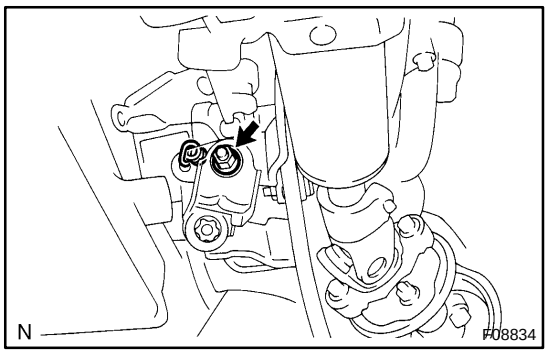

13. REMOVE STEERING COLUMN ASSEMBLY
(a) Remove the nut and return spring.
(b) Disconnect the connectors.
(c) Remove the 4 nuts and steering column assembly.
14. REMOVE INTERMEDIATE SHAFT SUB-ASSEMBLY AND NO. 2 COLUMN HOLE COVER SUB-ASSEMBLY
(a) Remove the bolt A and remove the intermediate shaft sub-assembly .
(b) Remove the No. 2 column hole cover sub-assembly.

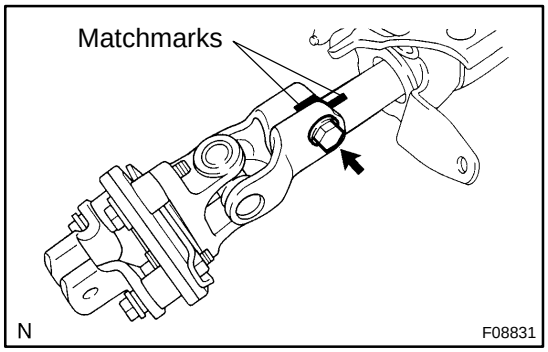

15. REMOVE UNIVERSAL JOINT ASSEMBLY
(a) Place matchmarks on the universal joint assembly and main shaft assembly.
(b) Remove the bolt and universal joint assembly.
16. w/ VSC:
REMOVE STEERING ANGLE SENSOR AND STEERING ANGLE SENSOR ADAPTER

17. REMOVE SPEED CONTROL MAIN SWITCH ASSEMBLY FROM STEERING WHEEL

Remove the 2 screws and speed control main switch assembly from the steering wheel.

FRONT AXLE HUB

COMPONENTS

SA0VR-02

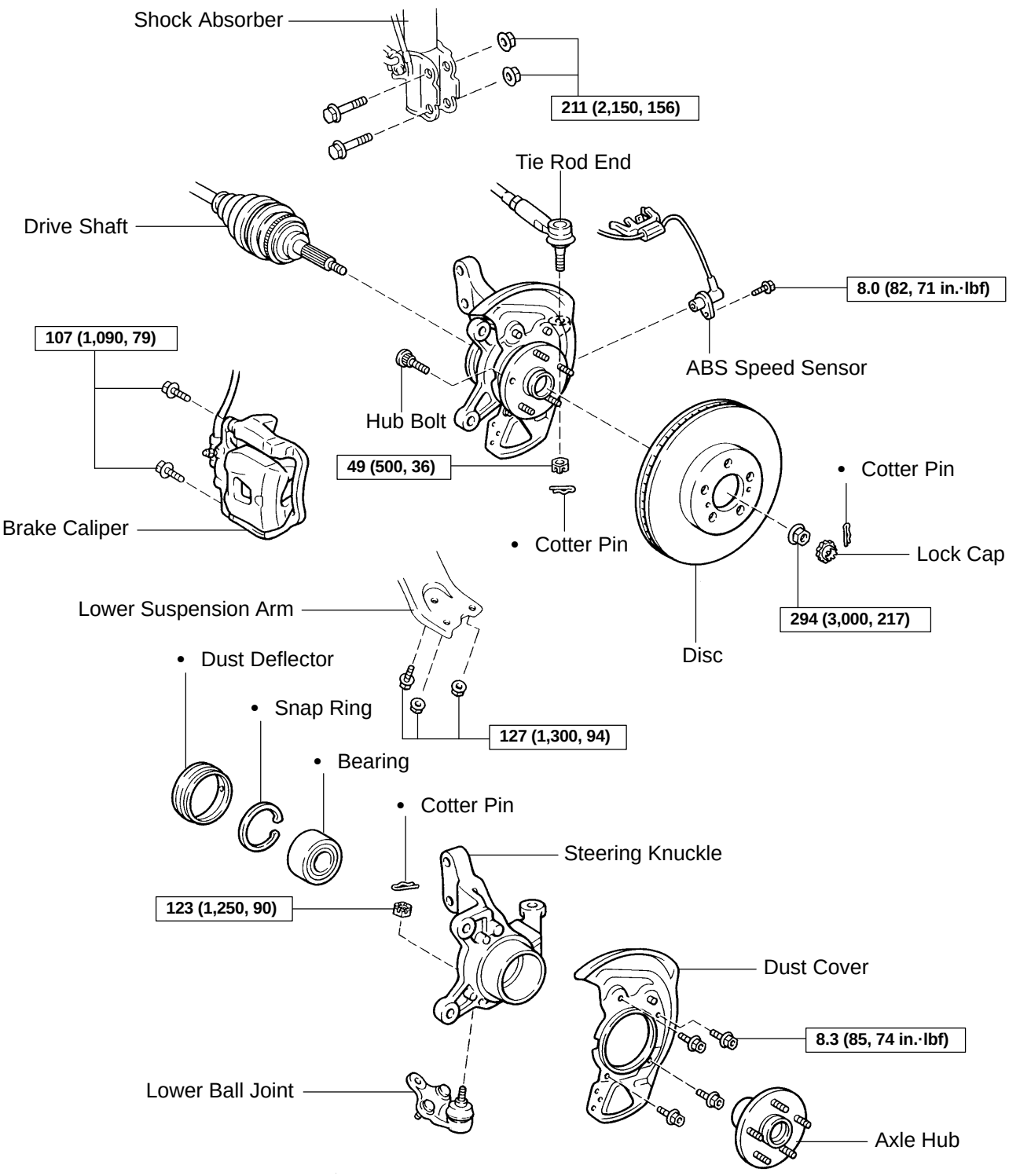

N·m (kgf·cm, ft·lbf) : Specified torque

• Non-reusable part

F04047

SA0VT-02

DISASSEMBLY

1. REMOVE DUST DEFLECTOR

Using a screwdriver, remove the dust deflector.

2. REMOVE LOWER BALL JOINT

(a) Remove the cotter pin and nut.

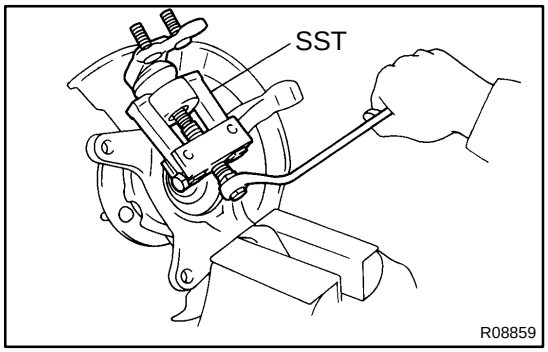

(b) Using SST, remove the lower ball joint.
SST 09628-6201 1

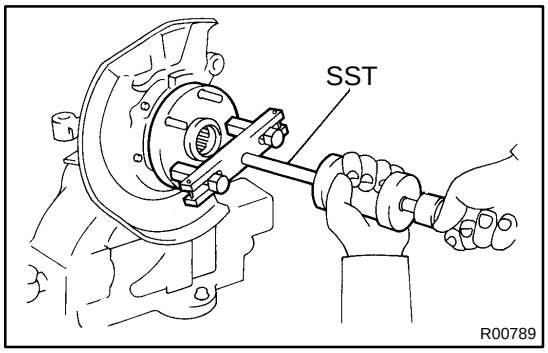

3. REMOVE AXLE HUB

(a) Using SST, remove the axle hub.
SST 09520-00031

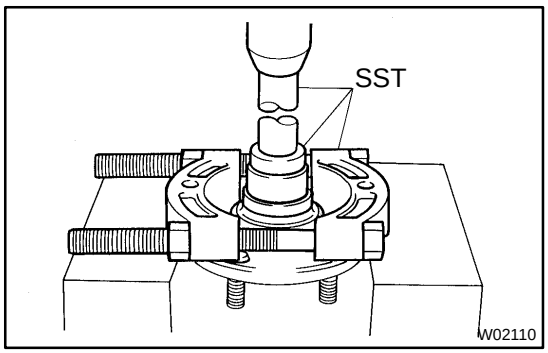

(b) Using SST and a press, remove the inner race (outside) from the axle hub.
SST 09950-00020, 09950-60010 (09951-00400), 09950-70010 (09951-07100)

4. REMOVE DUST COVER

Using a torx wrench (T30), remove the 4 bolts and dust cover.

5. REMOVE BEARING FROM STEERING KNUCKLE

(a) Using snap ring pliers, remove the snap ring.

(b) Place the inner race on the outside of the bearing.

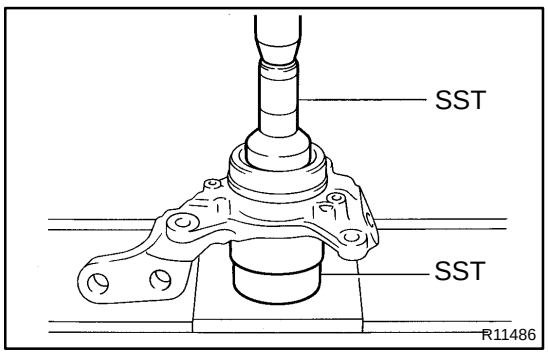

(c) Using SST and a press, remove the bearing.
SST 09310-35010, 09527-17011

SA0VV-03

INSTALLATION

Installation is in the reverse order of removal (See page SA-9).

HINT:

After installation, check the ABS speed sensor signal (See page DI-212 or DI-252) and front wheel alignment (See page SA-4).

NOTICE:

w/ VSC:

After installation, perform the steering angle sensor zero point calibration (See page DI-252).

SA0VU-02

REASSEMBLY

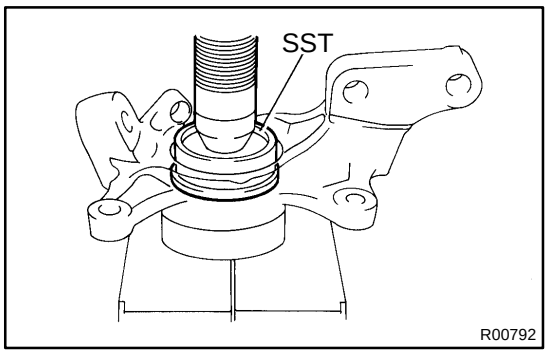

1. INSTALL BEARING

(a) Using SST and a press, install a new bearing to the steering knuckle.
SST 09608-32010

(b) Using snap ring pliers, install a new snap ring.

2. INSTALL DUST COVER

Using a torx wrench (T30), install the dust cover with the 4 bolts.
Torque: 8.3 N·m (85 kgf·cm, 74 in.·lbf)

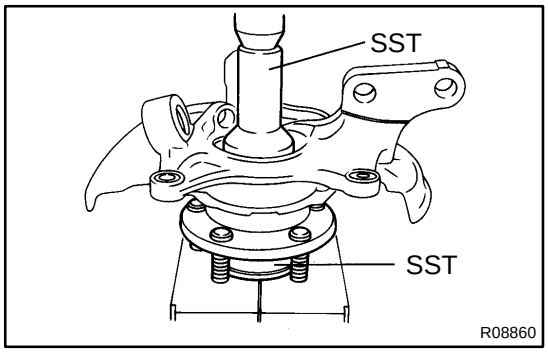

3. INSTALL FRONT AXLE HUB

Using SST and a press, install the axle hub.
SST 09310-35010, 09608-32010

4. INSTALL LOWER BALL JOINT

(a) Install the lower ball joint and nut.
Torque: 123 N·m (1,250 kgf·cm, 90 ft·lbf)

(b) Install a new cotter pin.

If the holes for the cotter pin are not aligned, tighten the nut further up to 60°.

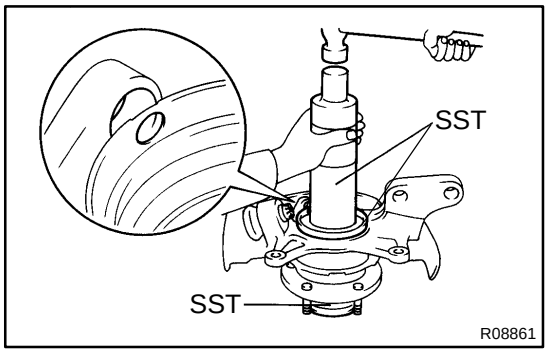

5. INSTALL DUST DEFLECTOR

Using SST and a hammer, install a new dust deflector.
SST 09316-6001 1 (09316-00011, 09316-00041), 09608-32010

HINT:

Align the hole for the ABS speed sensor in the dust deflector with the one in the steering knuckle.

SA0VS-02

REMOVAL

1. REMOVE FRONT WHEEL

Torque: 103 N·m (1,050 kgf·cm, 76 ft·lbf)

2. CHECK BEARING BACKLASH AND AXLE HUB DEVIATION

(a) Remove the 2 bolts, brake caliper and disc.

(b) Support the brake caliper securely.

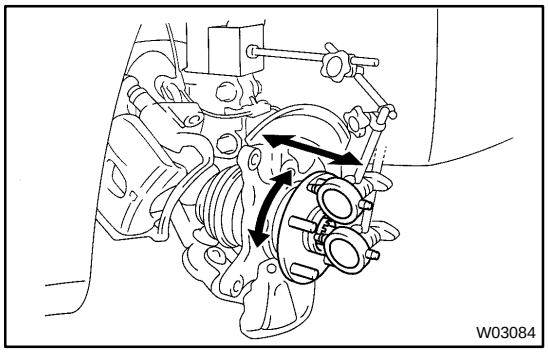

(c) Using a dial indicator, check the backlash near the center of the axle hub.

Maximum: 0.05 mm (0.0020 in.)

If the backlash exceeds the maximum, replace the bearing.

(d) Using a dial indicator, check the deviation at the surface of the axle hub outside the hub bolt.

Maximum: 0.05 mm (0.0020 in.)

If the deviation exceeds the maximum, replace the axle hub.

(e) Install the disc, brake caliper and 2 bolts.

Torque: 107 N·m (1,090 kgf·cm, 79 ft·lbf)

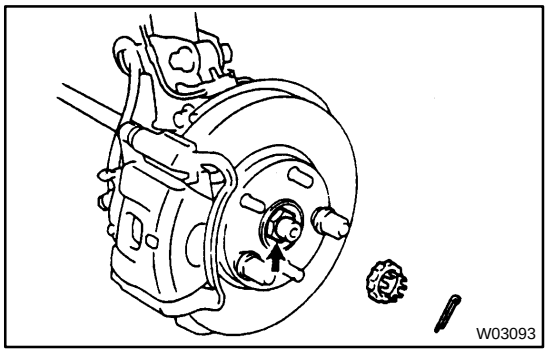

3. REMOVE DRIVE SHAFT LOCK NUT

(a) Remove the cotter pin and lock cap.

(b) While applying the brakes, remove the nut.

Torque: 294 N·m (3,000 kgf·cm, 217 ft·lbf)

(c) Remove the 2 bolts, brake caliper and disc.

(d) Support the brake caliper securely.

4. DISCONNECT ABS SPEED SENSOR AND WIRE HARNESS CLAMP

Remove the bolt and disconnect the ABS speed sensor and wire harness clamp.

Torque: 8.0 N·m (82 kgf·cm, 71 in.·lbf)

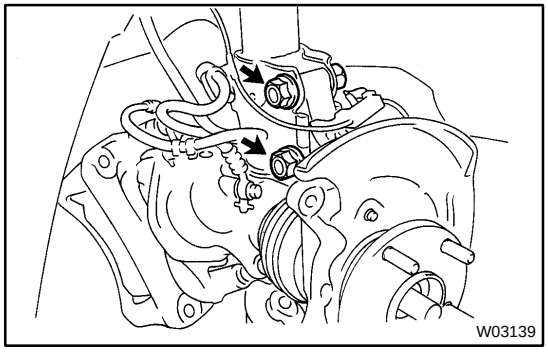

5. LOOSEN 2 NUTS ON LOWER SIDE OF SHOCK ABSORBER

HINT:

Do not remove the bolts.

Torque: 211 N·m (2,150 kgf·cm, 156 ft·lbf)

HINT:

At the this time of installation, coat the nut's thread with engine oil.

6. DISCONNECT TIE ROD END FROM STEERING KNUCKLE

(a) Remove the cotter pin and nut.
Torque: 49 N·m (500 kgf·cm, 36 ft·lbf)

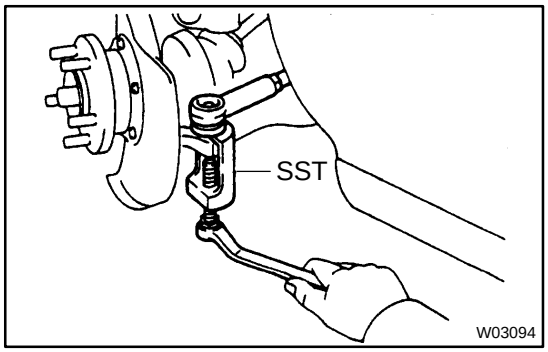

(b) Using SST, disconnect the tie rod end from the steering knuckle.
SST 09610-20012

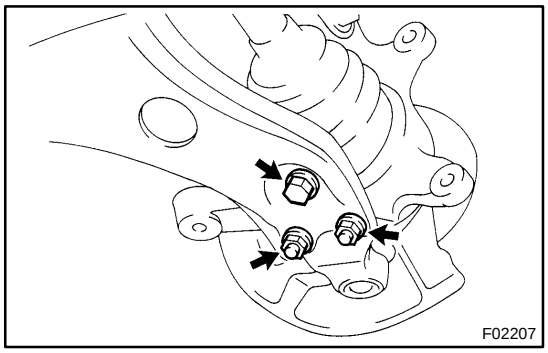

7. DISCONNECT LOWER BALL JOINT FROM LOWER SUSPENSION ARM

Remove the 2 nuts and bolt.
Torque: 127 N·m (1,300 kgf·cm, 94 ft·lbf)

8. REMOVE STEERING KNUCKLE WITH AXLE HUB

(a) Remove the 2 nuts and bolts on the lower side of the shock absorber.

(b) Remove the steering knuckle with the axle hub.

NOTICE:
Be careful not to damage the boot and ABS speed sensor rotor.

FRONT DRIVE SHAFT

COMPONENTS

SA0VX-02

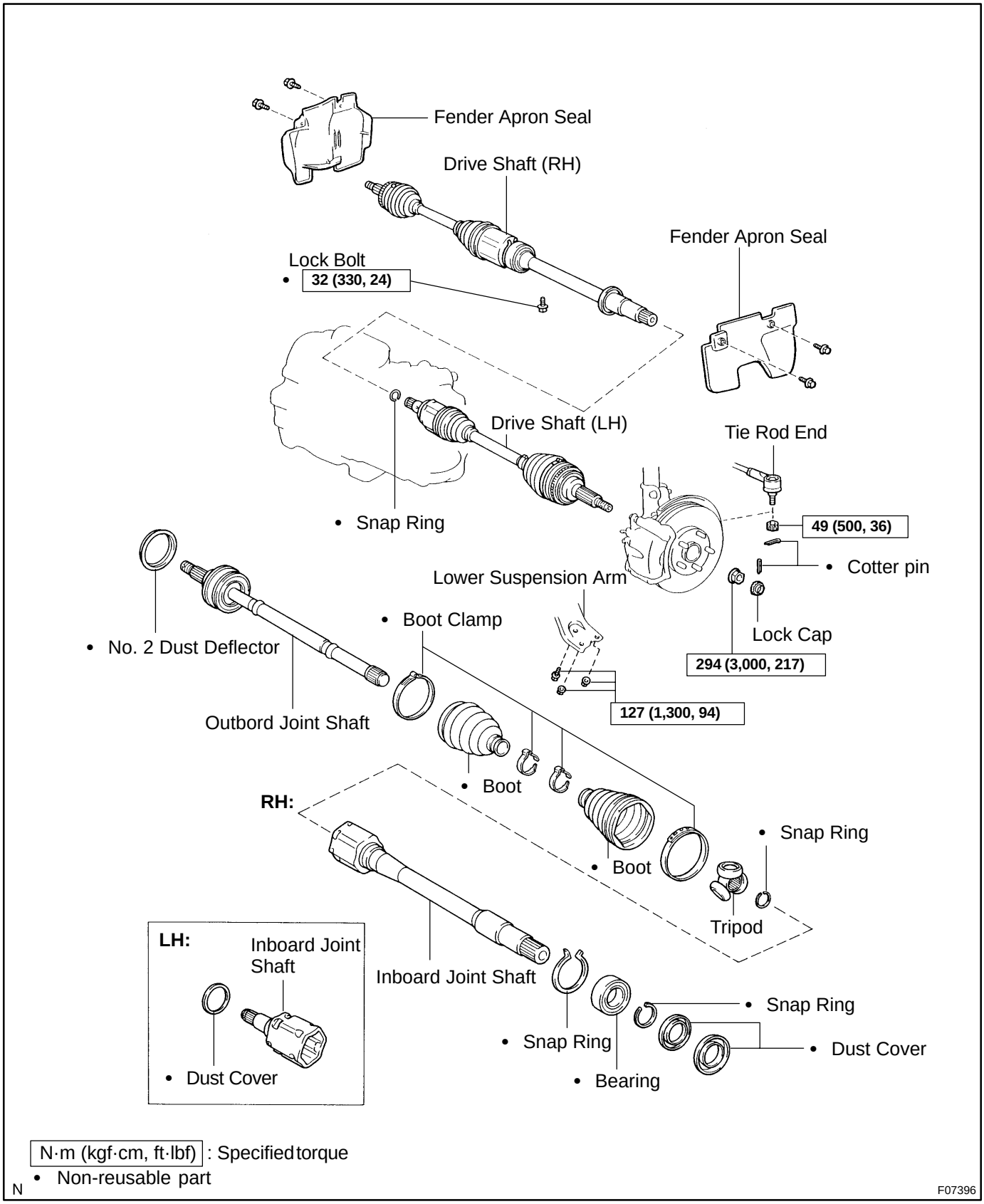

SA1EA-03

DISASSEMBLY

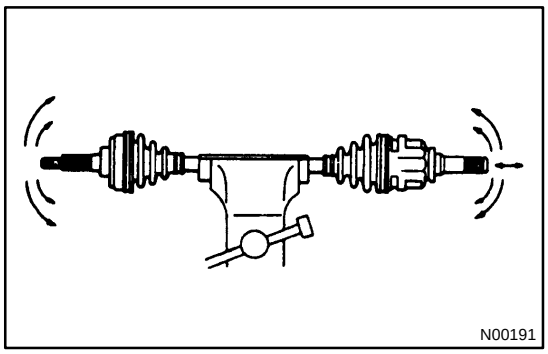

1. CHECK DRIVE SHAFT

(a) Check to see that there is no remarkable play in the outboard joint.

(b) Check to see that the inboard joint slides smoothly in the thrust direction.

(c) Check to see that there is no remarkable play in the radial direction of the inboard joint.

(d) Check the boots for damage.

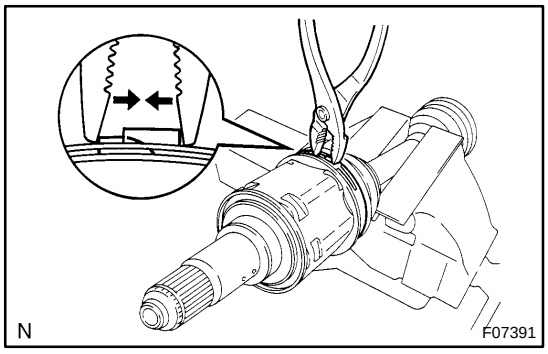

2. REMOVE INBOARD AND OUTBOARD JOINT BOOT CLAMPS

(a) Using pliers, pinch the claws to compress the large inboard joint boot clamp and remove it.

(b) Using a side cutter, cut the small inboard joint boot clamp and remove it.

(c) Using a side cutter, cut the 2 outboard joint boot clamps and remove them.

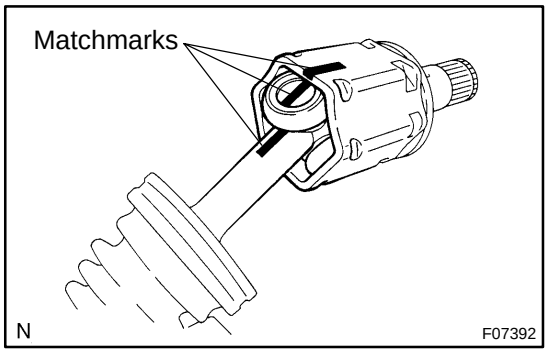

3. REMOVE INBOARD JOINT SHAFT

(a) Place matchmarks on the tripod, inboard and outboard joint shafts.

NOTICE:

Do not punch the marks.

(b) Remove the inboard joint shaft from the outboard joint shaft.

4. REMOVE TRIPOD

(a) Using a snap ring expander, remove the snap ring.

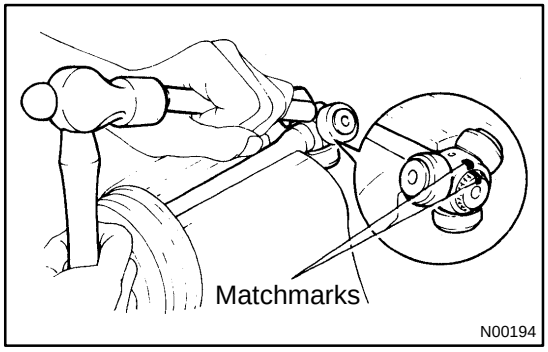

(b) Place matchmarks on the outboard joint shaft and tripod.

NOTICE:

Do not punch the marks.

(c) Using a brass bar and hammer, remove the tripod from the outboard joint shaft.

NOTICE:

Do not tap the roller.

5. REMOVE INBOARD AND OUTBOARD JOINT BOOTS

Slide out the 2 boots.

NOTICE:

Do not disassemble the outboard joint.

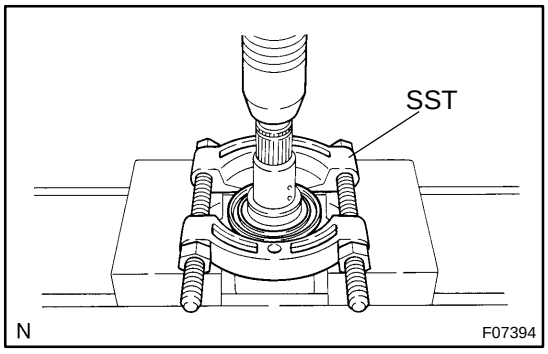

6. LH drive shaft:
REMOVE DUST COVER

Using SST and a press, remove the dust cover from the inboard joint shaft.

SST 09950-00020

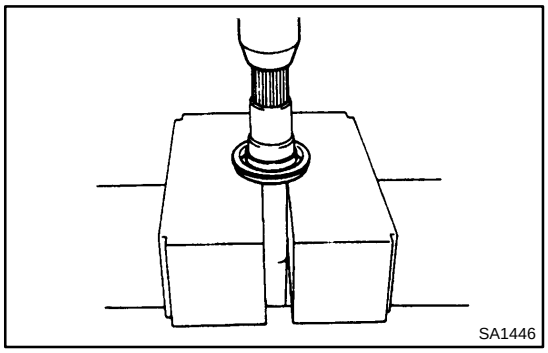

7. RH drive shaft:
DISASSEMBLE INBOARD JOINT SHAFT

(a) Using a press, remove the transaxle side dust cover from the inboard joint shaft.

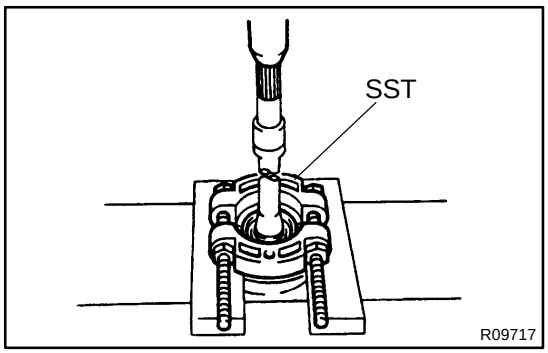

(b) Using SST and a press, remove the bearing side dust cover.
SST 09950-00020

(c) Using a snap ring expander, remove the snap ring.

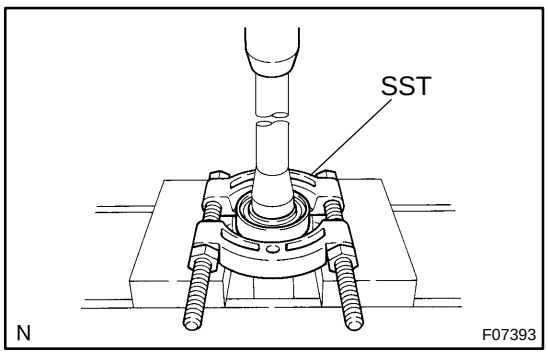

(d) Using SST and a press, remove the bearing.
SST 09950-00020

(e) Remove the snap ring.

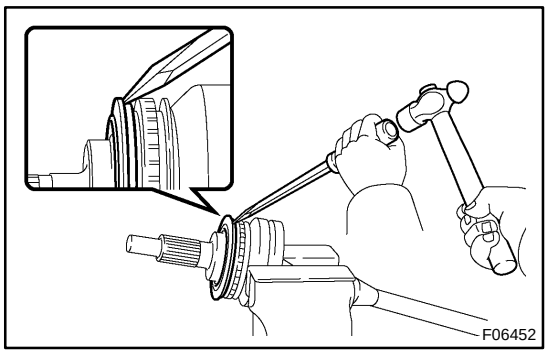

8. REMOVE NO. 2 DUST DEFLECTOR

(a) Mount the outboard joint shaft in a soft jaw vise.

(b) Using a screwdriver and hammer, remove the No. 2 dust deflector.

NOTICE:

Be careful not to damage the ABS speed sensor rotor.

SA0W1-03

INSTALLATION

Installation is in the reverse order of removal (See page SA-16).

HINT:

After installation, check the ABS speed sensor signal (See page DI-212 or DI-252) and front wheel alignment (See page SA-4).

NOTICE:

w/ VSC:

After installation, perform the steering angle sensor zero point calibration (See page DI-252).

SA1EB-03

REASSEMBLY

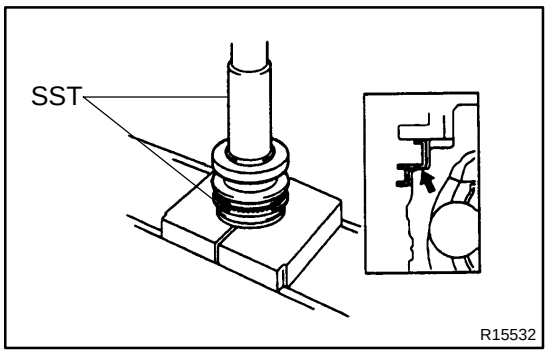

1. INSTALL NO. 2 DUST DEFLECTOR

Using SST and a press, install a new No. 2 dust deflector.

SST 09309-36010, 09316-20011

2. RH drive shaft:
ASSEMBLE INBOARD JOINT SHAFT

(a) Install a new snap ring to the inboard joint shaft.

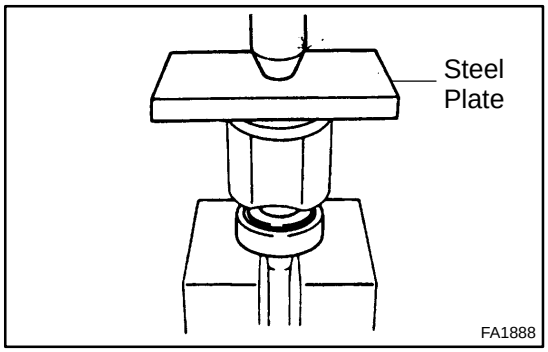

(b) Using a steel plate and press, install a new bearing.

(c) Using a snap ring expander, install a new snap ring.

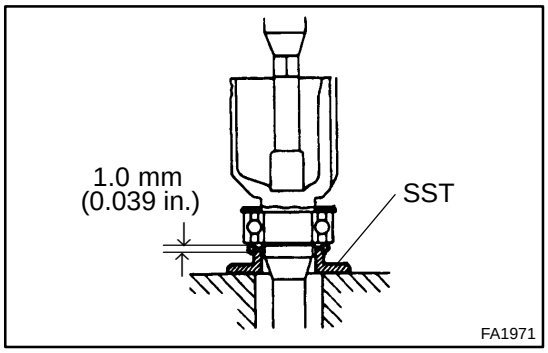

(d) Using SST, an extension bar and press, install a new bearing side dust cover.

SST 09506-35010

HINT:

The clearance between the dust cover and the bearing should be kept in the range shown in the illustration.

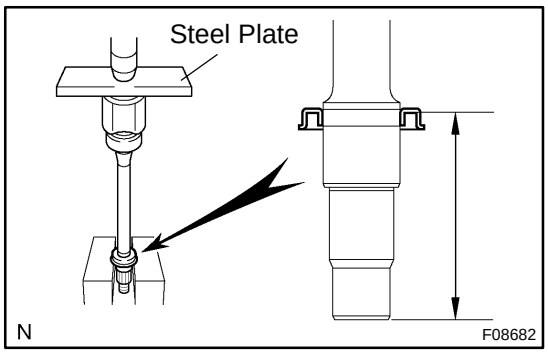

(e) Using a steel plate and press, install a new transaxle side dust cover until the distance from the tip of the inboard joint shaft to the dust cover falls within the specified value, as shown in the illustration.

Distance: 109.5 - 110.5 mm (4.31 - 4.35 in.)

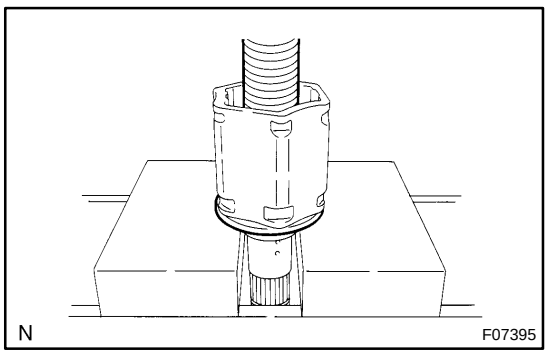

3. LH drive shaft:
INSTALL DUST COVER

Using a press, install a new dust cover.

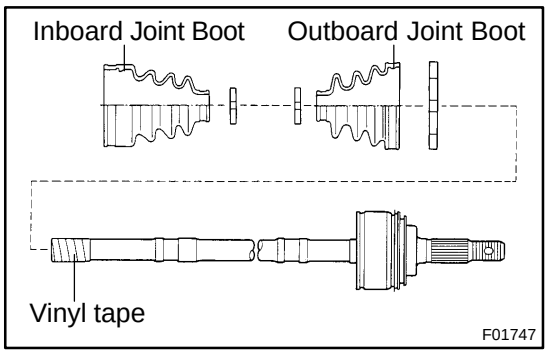

4. TEMPORARILY INSTALL OUTBOARD AND INBOARD JOINT BOOTS AND NEW BOOT CLAMPS

HINT:

- Before installing the boots, wrap the spline of the outboard joint shaft with vinyl tape to prevent the boots from being damaged.
- Before installing the boots, place 3 new clamps to the small boot ends and large boot end (outboard joint side).

5. INSTALL TRIPOD

(a) Place the beveled side of the tripod axial spline toward the outboard joint.

(b) Align the matchmarks placed before removal.

(c) Using a brass bar and hammer, tap in the tripod to the outboard joint shaft.

NOTICE:

Do not tap the roller.

(d) Using a snap ring expander, install a new snap ring.

6. INSTALL BOOT TO OUTBOARD JOINT

Before assembling the boot, pack the outboard joint and boot with grease in the boot kit.

Grease capacity (Color = Gray):
105 - 125 g (3.7 - 4.4 oz.)

7. INSTALL INBOARD JOINT SHAFT TO OUTBOARD JOINT SHAFT

(a) Pack the inboard joint and boot with grease in the boot kit.
Grease capacity (Color = Yellow ocher):
170 - 190 g (6.0 - 6.7 oz.)

(b) Align the matchmarks placed before removal, and install the inboard joint shaft to the outboard joint shaft.

(c) Temporarily install the boot to the inboard joint shaft.

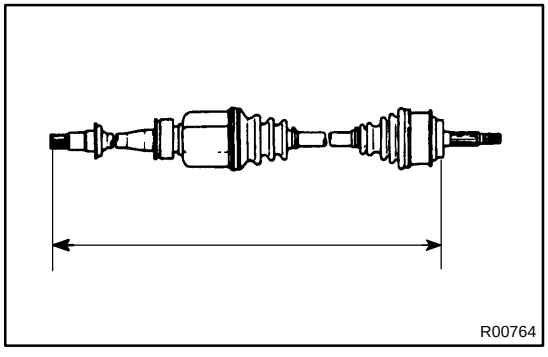

8. CHECK DRIVE SHAFT LENGTH

(a) Make sure that the 2 boots are on the shaft groove.

(b) Make sure that the 2 boots are not stretched or contracted when the drive shaft is at standard length.

Drive shaft standard length:

LH	586.0 ± 2.0 mm (23.071 ± 0.079 in.)
RH	881.6 ± 2.0 mm (34.709 ± 0.079 in.)

9. Large inboard joint boot clamp:
INSTALL BOOT CLAMP TO INBOARD JOINT SHAFT BOOT

(a) Place the large inboard joint boot clamp.

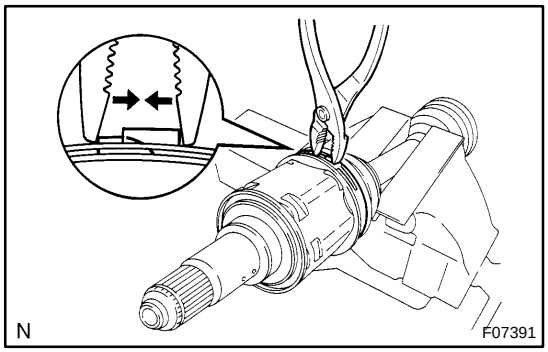

(b) Using pliers, pinch the claws to compress the clamp and engage the other claws.

10. Others:
INSTALL BOOT CLAMPS TO BOTH BOOTS

(a) Secure the preplaced 3 clamps onto the boots.

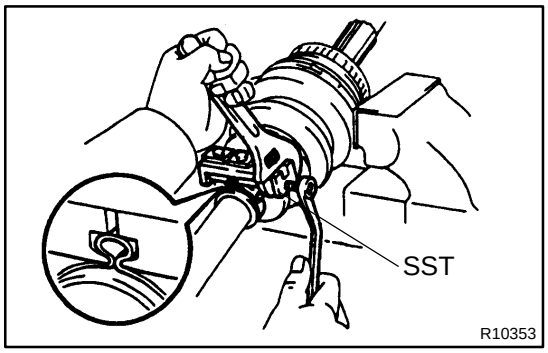

(b) Place SST onto the clamp.
SST 09521-24010

(c) Tighten the SST so that the clamp is pinched.

NOTICE:
Do not overtighten the SST.

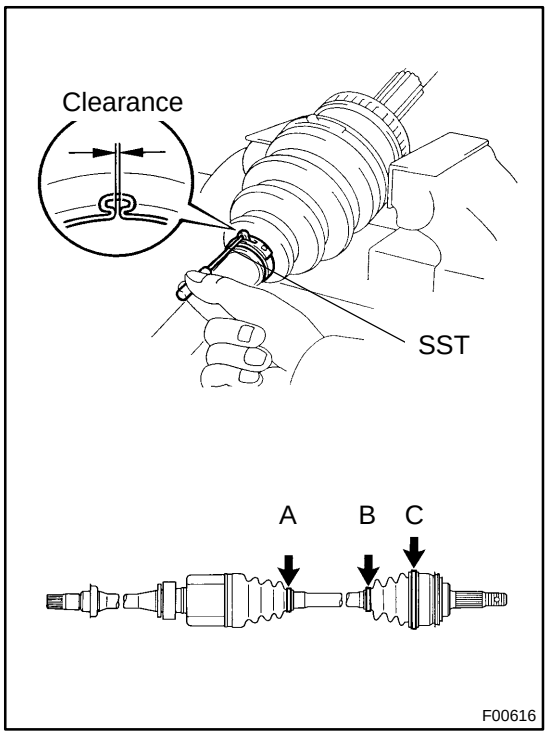

(d) Using SST, adjust the clearance of the clamp.
SST 09240-00020
Clearance:
A : 1.9 mm (0.075 in.) or less
B : 1.5 - 2.5 mm (0.059 - 0.098 in.)
C : 3.0 - 4.0 mm (0.118 - 0.157 in.)

11. CHECK DRIVE SHAFT (See page SA-18)

SA0VY-02

REMOVAL

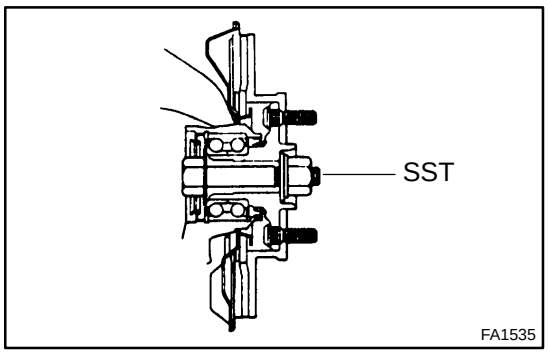

NOTICE:

- **The hub bearing could be damaged if it is subjected to the vehicle weight, such as when moving the vehicle with the drive shaft removed.**
  Therefore, if it is absolutely necessary to place the vehicle weight on the hub bearing, first support it with SST.
  SST 09608-16042 (09608-02021, 09608-02041)
- **After disconnecting the drive shaft from the axle hub, work carefully so as not to damage the ABS speed sensor rotor serration on the drive shaft.**

1. REMOVE FRONT WHEEL
Torque: 103 N·m (1,050 kgf·cm, 76 ft·lbf)

2. REMOVE FRONT FENDER APRON SEAL

3. DRAIN ATF

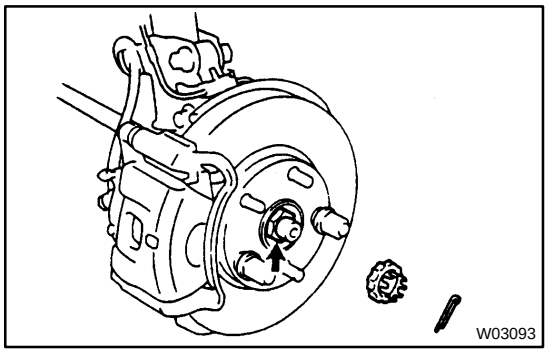

4. REMOVE DRIVE SHAFT LOCK NUT

(a) Remove the cotter pin and lock cap.

(b) While applying brakes, remove the nut.
Torque: 294 N·m (3,000 kgf·cm, 217 ft·lbf)

5. DISCONNECT TIE ROD END FROM STEERING KNUCKLE (See page SA-9)

6. DISCONNECT LOWER SUSPENSION ARM FROM LOWER BALL JOINT (See page SA-9)

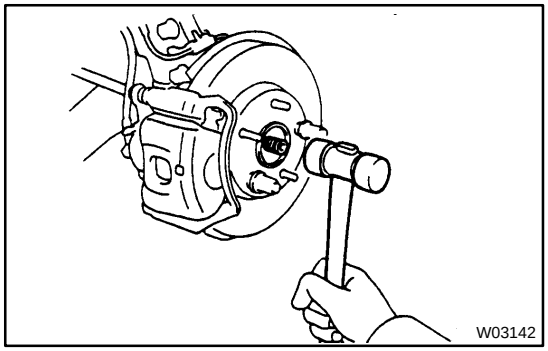

7. DISCONNECT DRIVE SHAFT FROM AXLE HUB

Using a plastic hammer, disconnect the drive shaft from the axle hub.

NOTICE:

Be careful not to damage the boot and ABS speed sensor rotor.

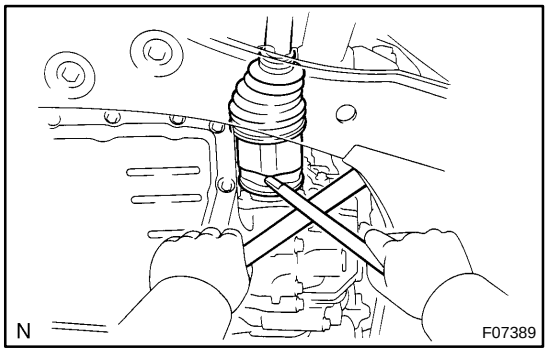

8. LH drive shaft:
REMOVE DRIVE SHAFT

(a) Using a hub nut wrench and hammer handle or an equivalent, remove the drive shaft.

NOTICE:

Be careful not to damage the dust cover and oil seal.

HINT:

At the time of installation, please refer to the following items.

- Coat gear oil to the inboard joint shaft and differential case sliding surface.
- Before installing the drive shaft, set the snap ring opening side facing downward.
- Whether or not the inboard joint shaft is making contact with the pinion shaft can be known by the sound or feeling when driving it in.
- After installation, check that there is 2 - 3 mm (0.08 - 0.12 in.) of play in the axial direction.
- After installation, check that the drive shaft cannot be removed by hand.

(b) Using a screwdriver, remove the snap ring from the inboard joint shaft.

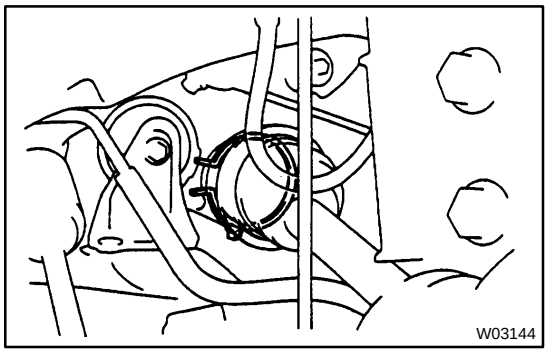

9. RH drive shaft:

REMOVE DRIVE SHAFT

(a) Remove the bearing lock bolt.

Torque: 32 N·m (330 kgf·cm, 24 ft·lbf)

(b) Using pliers, remove the snap ring and drive shaft.

NOTICE:

Be careful not to damage the dust cover and oil seal.

HINT:

At the time of installation, coat gear oil to the inboard joint shaft and differential case sliding surface.

FRONT LOWER BALL JOINT

SA0VA-02

COMPONENTS

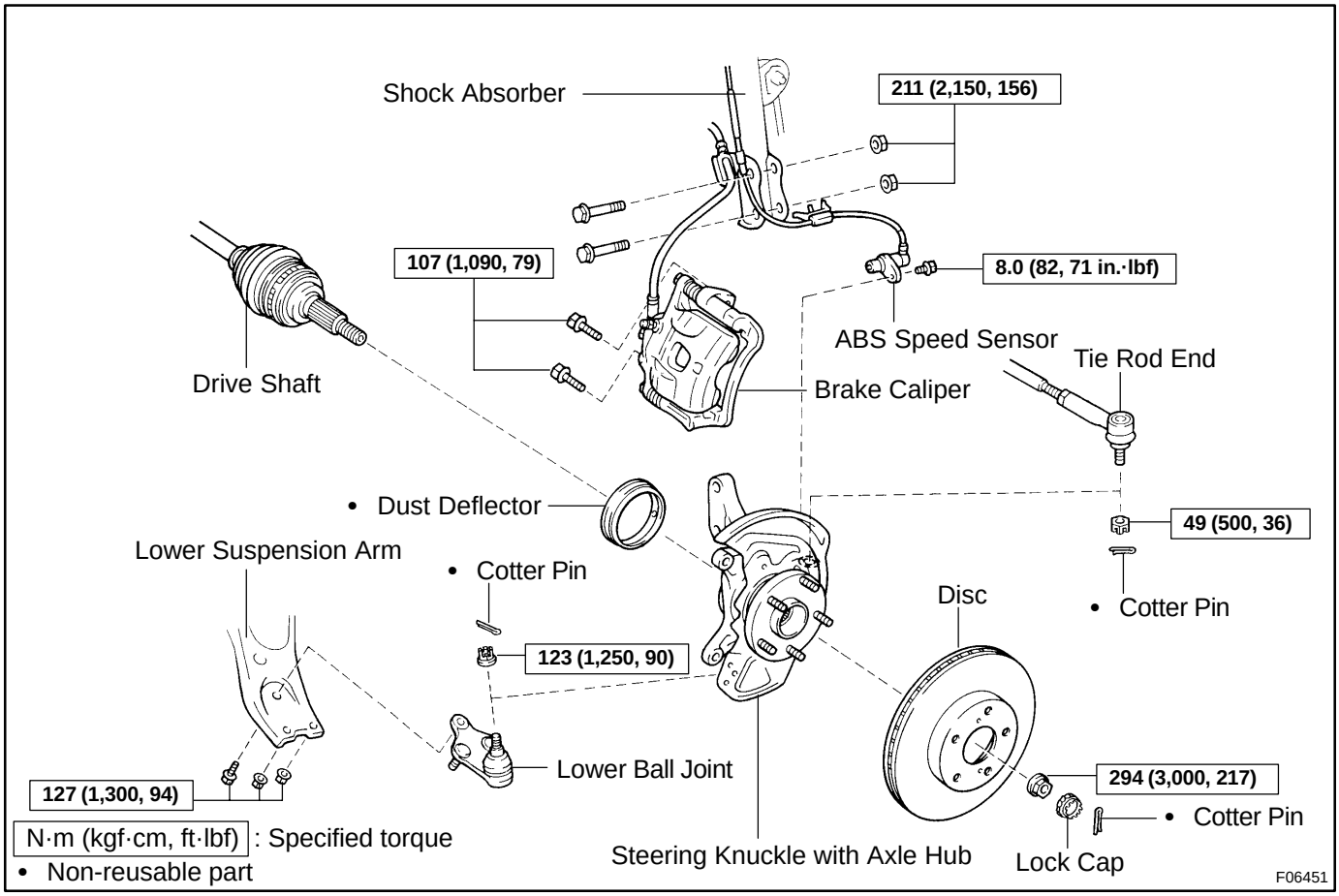

SA0VC-01

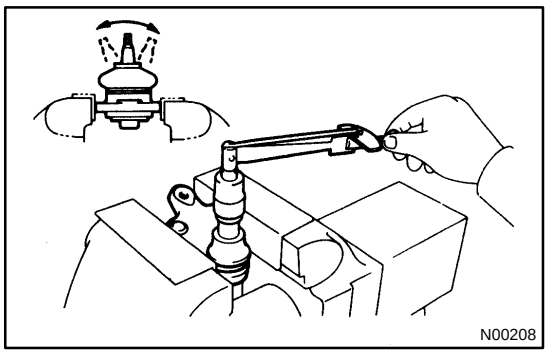

INSPECTION

INSPECT LOWER BALL JOINT FOR ROTATION CONDITION

(a) As shown in the illustration, flip the ball joint stud back and forth 5 times, before installing the nut.

(b) Using a torque wrench, turn the nut continuously at a rate of 2 - 4 seconds per 1 turn and take the torque reading on the 5th turn.

Turning torque:

1.0 - 3.4 N·m (10 - 35 kgf·cm, 8.7 - 30 in.·lbf)

SA0VD-03

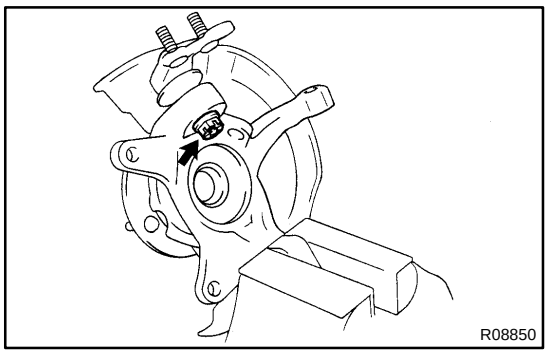

INSTALLATION

1. INSTALL LOWER BALL JOINT

(a) Install the lower ball joint and nut.

Torque: 123 N·m (1,250 kgf·cm, 90 ft·lbf)

(b) Install a new cotter pin.

If the holes for the cotter pin are not aligned, tighten the nut further up to 60˚.

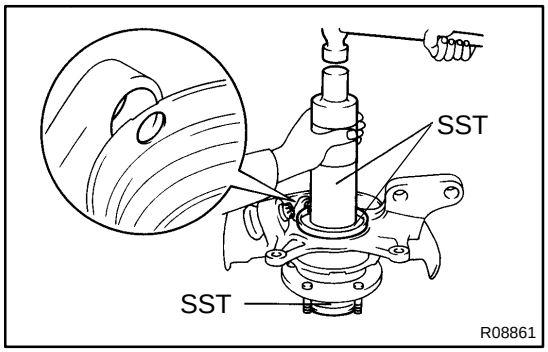

2. INSTALL NEW DUST DEFLECTOR

Using SST and a hammer, install a new dust deflector.

SST 09316-6001 1 (09316-00011, 09316-00041), 09608-32010

HINT:

Align the holes for the ABS speed sensor in the dust deflector and steering knuckle.

3. INSTALL FRONT AXLE HUB (See page SA-13)

4. CHECK ABS SPEED SENSOR SIGNAL (See page DI-212 or DI-252) AND FRONT WHEEL ALIGNMENT (See page SA-4)

5. w/ VSC:

PERFORM STEERING ANGLE SENSOR ZERO POINT CALIBRATION (See page DI-252)

SA0VB-01

REMOVAL

1. REMOVE FRONT AXLE HUB (See page SA-9)

2. REMOVE LOWER BALL JOINT

(a) Using a screwdriver, remove the dust deflector.

(b) Remove the cotter pin and nut.

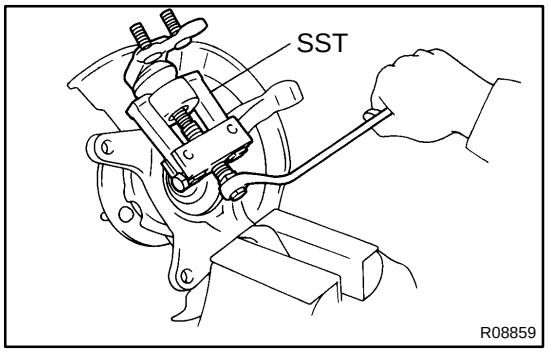

(c) Using SST, remove the lower ball joint.
SST 09628-6201 1

FRONT LOWER SUSPENSION ARM

SA0V6-02

COMPONENTS

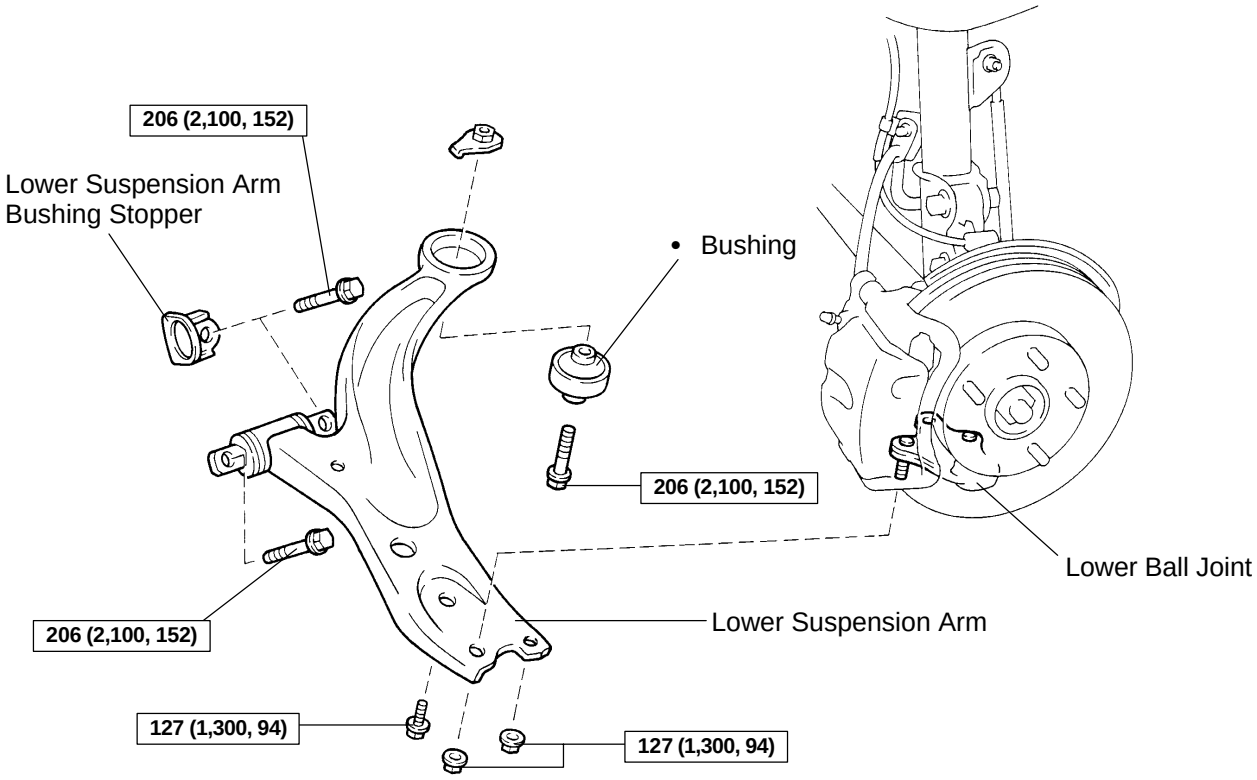

N·m (kgf·cm, ft·lbf) : Specified torque
• Non-reusable part

F02228

SA0V9-02

INSTALLATION

Installation is in the reverse order of removal (See page SA-33).

HINT:

After installation, check the front wheel alignment (See page SA-4).

SA0V7-02

REMOVAL

1. REMOVE FRONT WHEEL

Torque: 103 N·m (1,050 kgf·cm, 76 ft·lbf)

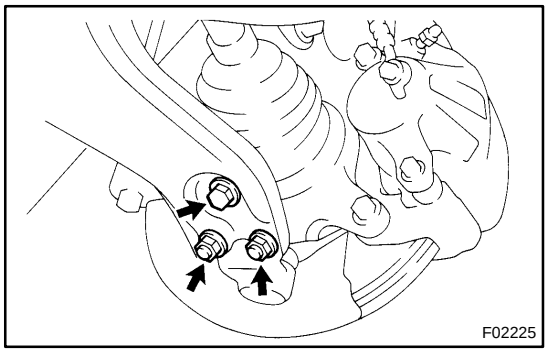

2. DISCONNECT LOWER SUSPENSION ARM FROM LOWER BALL JOINT

Remove the 2 nuts and bolt, and disconnect the lower suspension arm from the lower ball joint.

Torque: 127 N·m (1,300 kgf·cm, 94 ft·lbf)

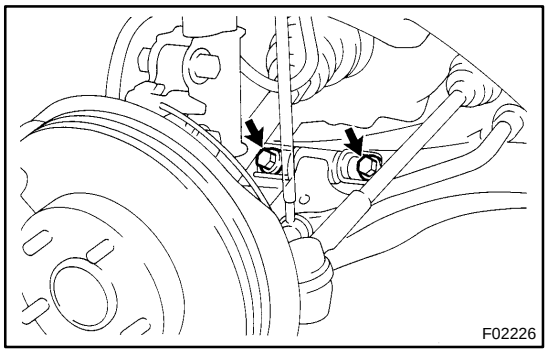

3. REMOVE LOWER SUSPENSION ARM

(a) Remove the 2 bolts on the front side of the lower suspension arm.

Torque: 206 N·m (2,100 kgf·cm, 152 ft·lbf)

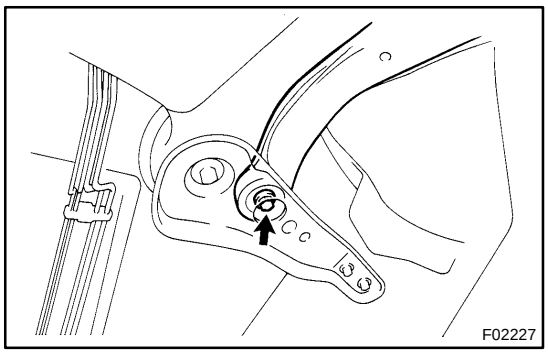

(b) Remove the bolt and nut on the rear side of the lower suspension arm.

Torque: 206 N·m (2,100 kgf·cm, 152 ft·lbf)

(c) Remove the lower suspension arm.

(d) Remove the lower suspension arm bushing stopper from the lower suspension arm.

SA0V8-02

REPLACEMENT

REPLACE BUSHING

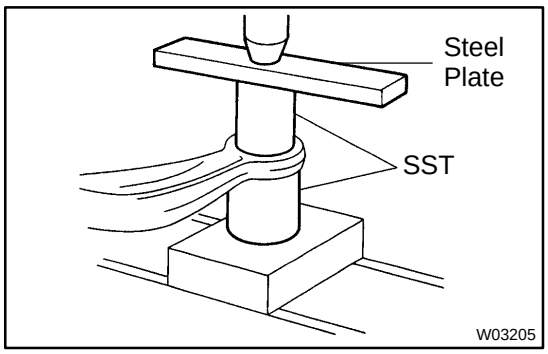

(a) Using SST, a steel plate and press, remove the bushing.
SST 09649-17010, 09710-04081

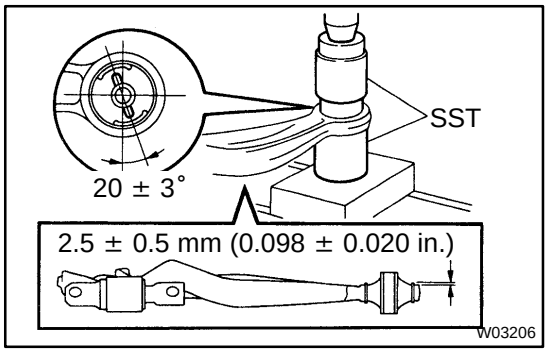

(b) Using SST and a press, install a new bushing.
SST 09238-47012, 09649-17010

HINT:
Before installing the bushing, set it in the correct direction, as shown in the illustration.

FRONT SHOCK ABSORBER

SA0UZ-02

COMPONENTS

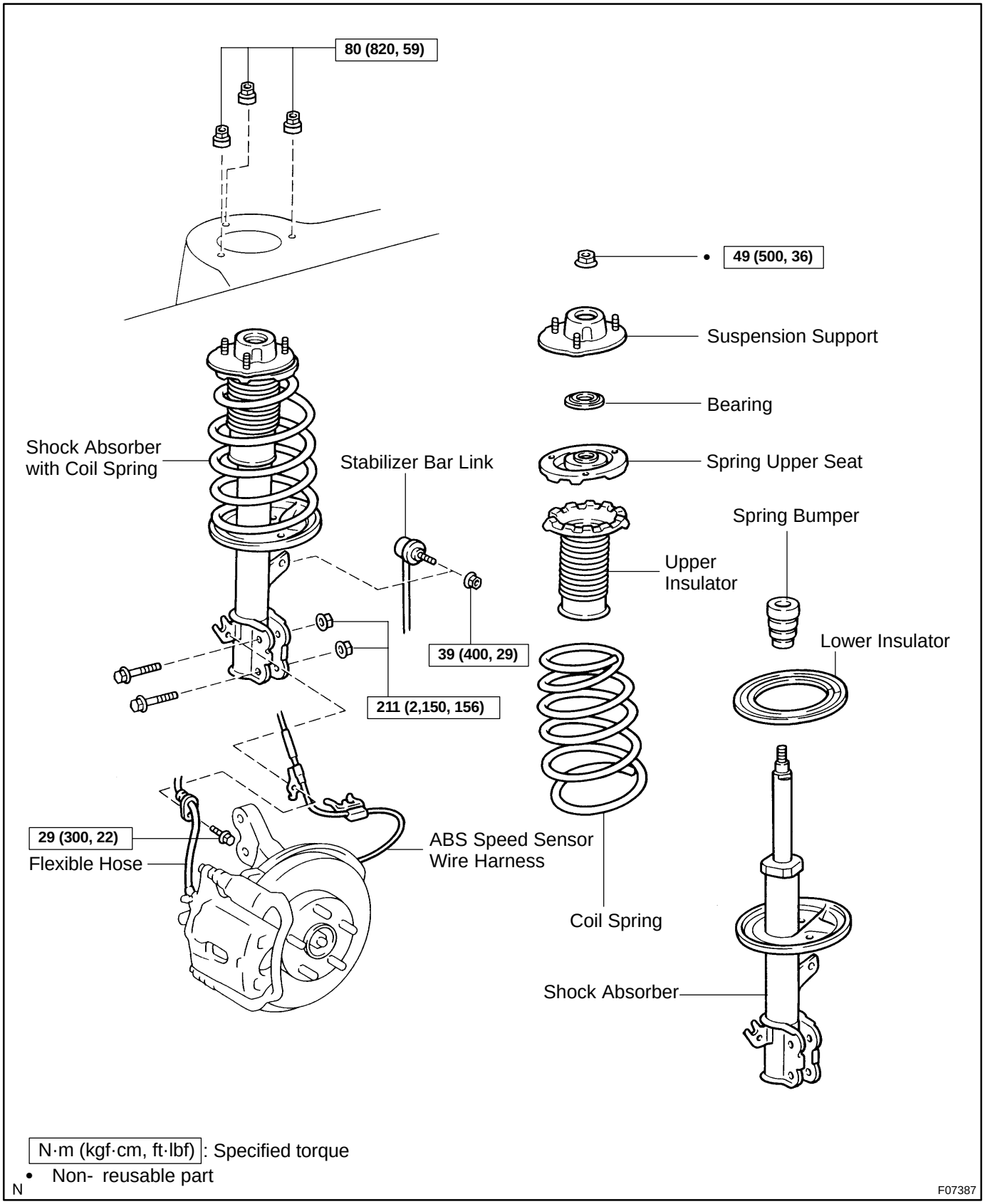

SA0V1-02

DISASSEMBLY

REMOVE COIL SPRING

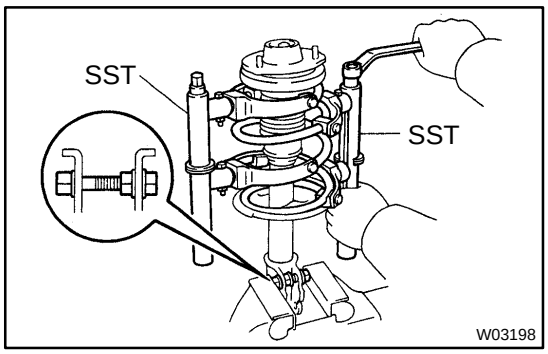

(a) Install 2 nuts and a bolt to the bracket at the lower side of the shock absorber and secure it in a vise.

(b) Using 2 SST of the same type, compress the coil spring.
SST 09727-30021

NOTICE:

Do not use an impact wrench. It will damage the SST.

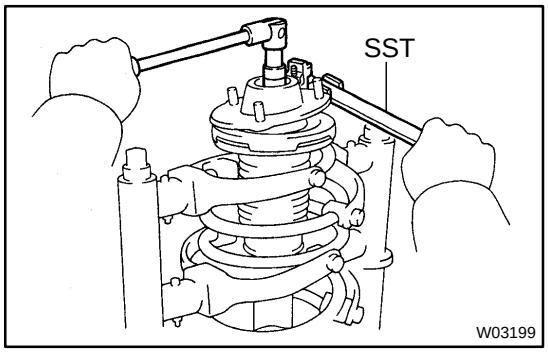

(c) Using SST to hold the suspension support, remove the nut.
SST 09729-22031

(d) Remove the suspension support, bearing, spring upper seat, upper insulator, coil spring, lower insulator and spring bumper.

SA0V3-02

DISPOSAL

1. FULLY EXTEND SHOCK ABSORBER ROD

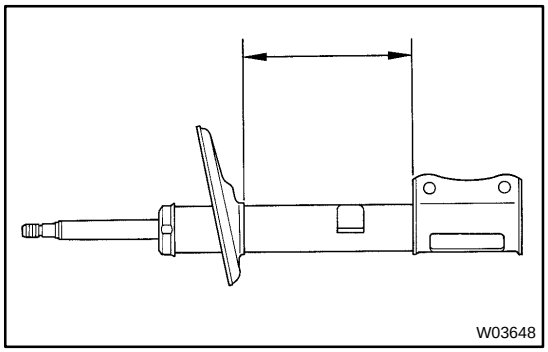

2. DRILL HOLE TO DISCHARGE GAS FROM CYLINDER

Using a drill, make a hole in the cylinder as shown in the illustration to discharge the gas inside.

CAUTION:

- **When drilling, chips may fly out, work carefully.**
- **The gas is colorless, odorless and non-poisonous.**

SA0V2-02

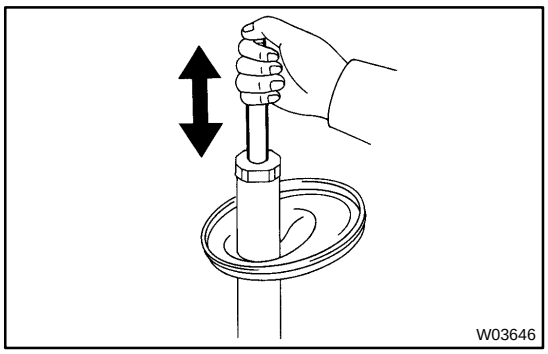

INSPECTION

INSPECT SHOCK ABSORBER

Compress and extend the shock absorber rod and check that there is no abnormal resistance or unusual sound during operation.

If there is any abnormality, replace the shock absorber with a new one.

NOTICE:

When disposing of the shock absorber, see DISPOSAL on page SA-29 .

SA0V5-03

INSTALLATION

Installation is in the reverse order of removal (See page SA-26).

HINT:

After installation, check the front wheel alignment (See page SA-4).

NOTICE:

w/ VSC:

After installation, perform the steering angle sensor zero point calibration (See page DI-252).

SA0V4-02

REASSEMBLY

1. INSTALL LOWER INSULATOR ONTO SHOCK ABSORBER

2. INSTALL SPRING BUMPER TO PISTON ROD

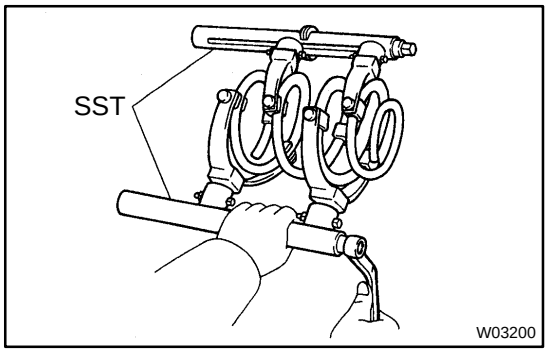

3. INSTALL COIL SPRING

(a) Using 2 SST of the same type, compress the coil spring.
SST 09727-30021

NOTICE:

Do not use an impact wrench. It will damage the SST.

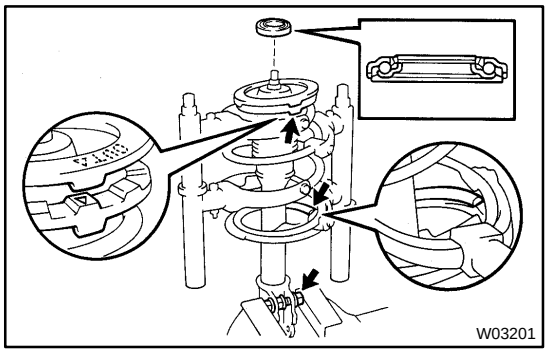

(b) Install the coil spring to the shock absorber.

HINT:

Fit the lower end of the coil spring into the gap of the spring lower seat.

4. INSTALL SPRING UPPER SEAT AND INSULATOR

(a) Align the 'OUT' mark of spring upper seat with the mark of the upper insulator.

(b) Install the spring upper seat with upper insulator to the shock absorber with the mark facing to the outside of the vehicle.

(c) Install the bearing and suspension support.

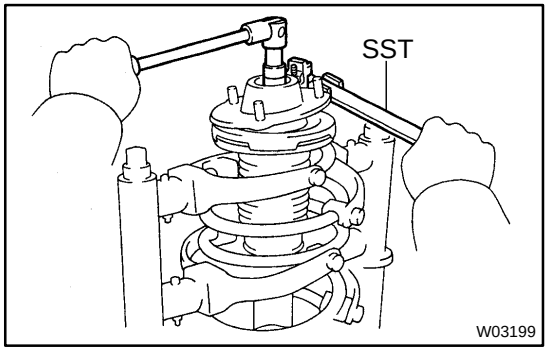

(d) Using SST to hold the suspension support, install a new nut.
SST 09729-22031
Torque: 49 N·m (500 kgf·cm, 36 ft·lbf)

(e) Remove the 2 SST from the coil spring.

NOTICE:

Check that the bearing fits into the recess in the suspension support.

SA0V0-02

REMOVAL

1. REMOVE FRONT WHEEL

Torque: 103 N·m (1,050 kgf·cm, 76 ft·lbf)

2. DISCONNECT FLEXIBLE HOSE AND ABS SPEED SENSOR WIRE HARNESS CLAMP

Remove the bolt and disconnect the flexible hose and ABS speed sensor wire harness clamp from the shock absorber.

Torque: 29 N·m (300 kgf·cm, 22 ft·lbf)

3. DISCONNECT STABILIZER BAR LINK FROM SHOCK ABSORBER (See page SA-41)

4. DISCONNECT SHOCK ABSORBER FROM STEERING KNUCKLE

(a) Remove the 2 nuts and bolts on the lower side of the shock absorber.

Torque: 211 N·m (2,150 kgf·cm, 156 ft·lbf)

(b) Remove the shock absorber from the steering knuckle.

HINT:

At the time of installation, coat the nut's threads with engine oil.

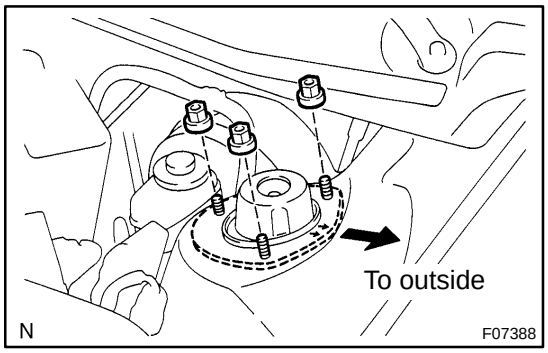

5. REMOVE SHOCK ABSORBER WITH COIL SPRING

Remove the 3 nuts and shock absorber with the coil spring.

Torque: 80 N·m (820 kgf·cm, 59 ft·lbf)

HINT:

At the time of installation, rotate the suspension support and set it in the direction, as shown.

FRONT STABILIZER BAR

SA0W2-02

COMPONENTS

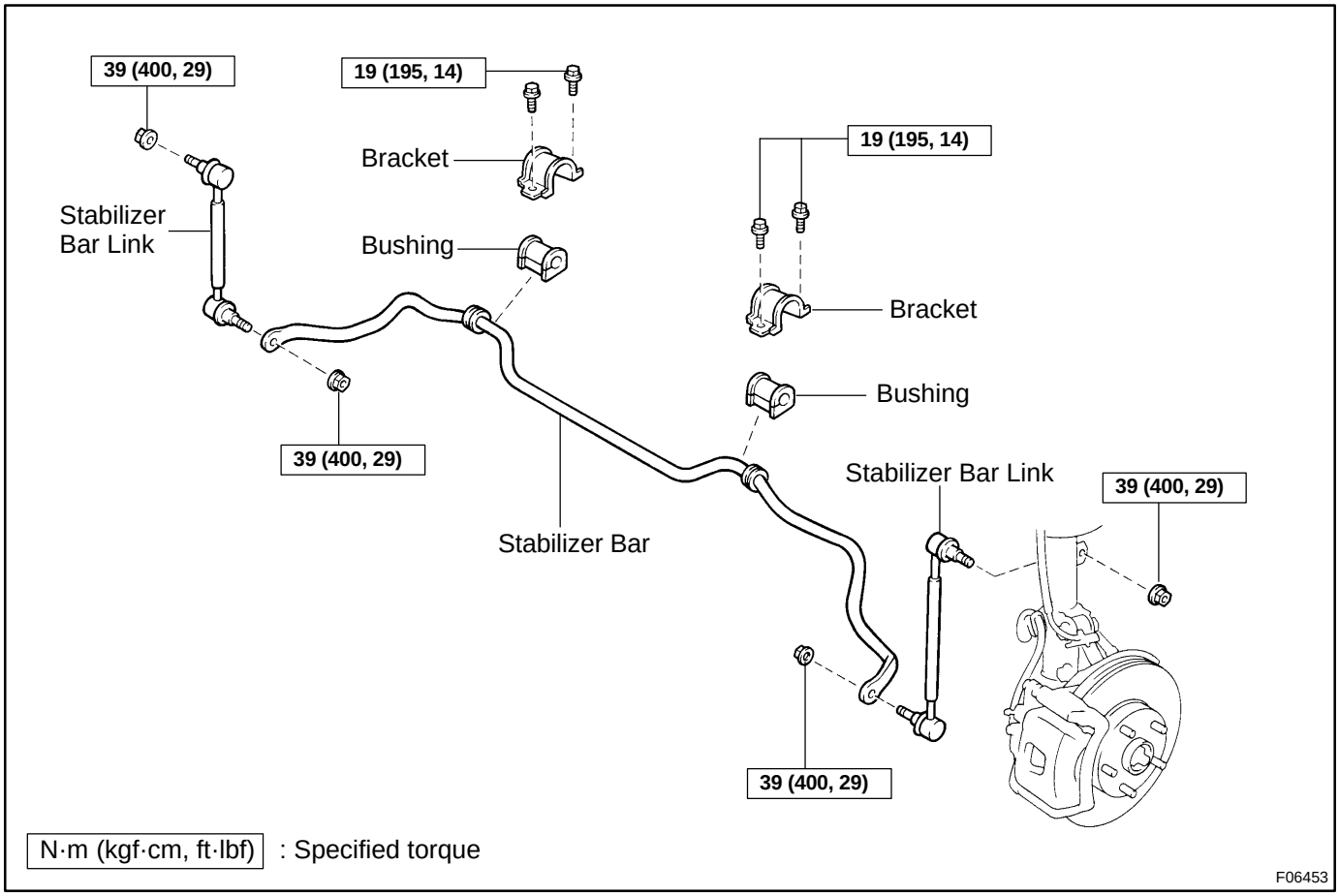

SA0W4-01

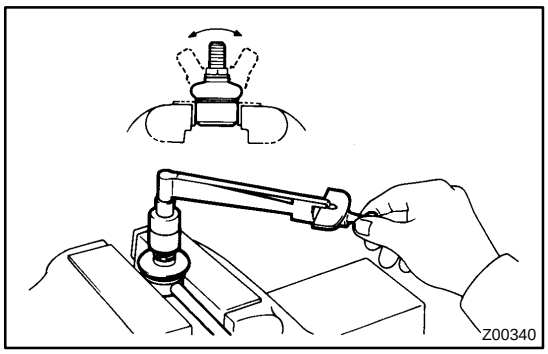

INSPECTION

INSPECT STABILIZER BAR LINK BALL JOINT FOR ROTATION CONDITION

(a) As shown in the illustration, flip the ball joint stud back and forth 5 times, before installing the nut.

(b) Using a torque wrench, turn the nut continuously at a rate of 2 - 4 seconds per 1 turn and take the torque reading on the 5th turn.

Turning torque:
0.05 - 1.0 N·m (0.5 - 10 kgf·cm, 0.4 - 8.7 in.·lbf)

SA0W5-01

INSTALLATION

Installation is in the reverse order of removal (See page SA-41).

SA0W3-02

REMOVAL

1. REMOVE FRONT WHEELS

Torque: 103 N·m (1,050 kgf·cm, 76 ft·lbf)

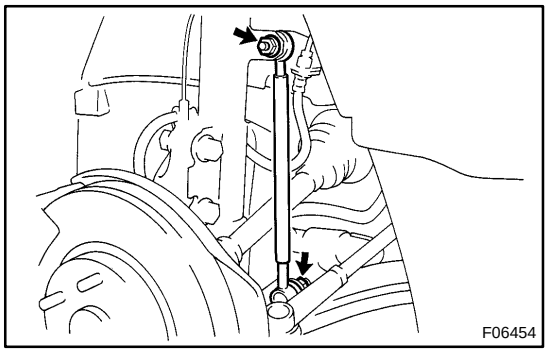

2. REMOVE STABILIZER BAR LINKS

(a) Remove the 2 nuts and stabilizer bar link.

Torque: 39 N·m (400 kgf·cm, 29 ft·lbf)

HINT:

If the ball joint turns together with the nut, use a hexagon (5 mm) wrench to hold the stud.

(b) Employ the same manner described above to the other side.

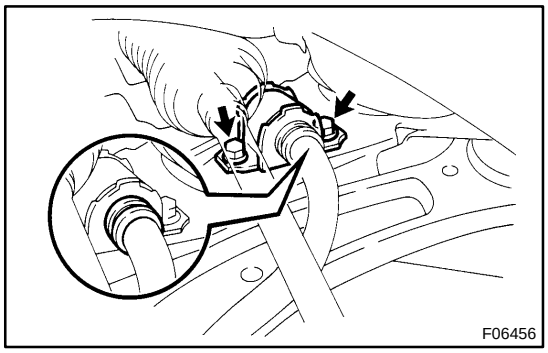

3. REMOVE BRACKETS AND BUSHINGS

(a) Remove the 2 bolts, bracket and bushing.

Torque: 19 N·m (195 kgf·cm, 14 ft·lbf)

HINT:

At the time of installation, install the bushing to the inside of the bushing stopper on the stabilizer bar.

(b) Employ the same manner described above to the other side.

4. REMOVE STABILIZER BAR

Remove the stabilizer bar from the left hand side.

NOTICE:

Be careful not to damage the pressure feed tube.

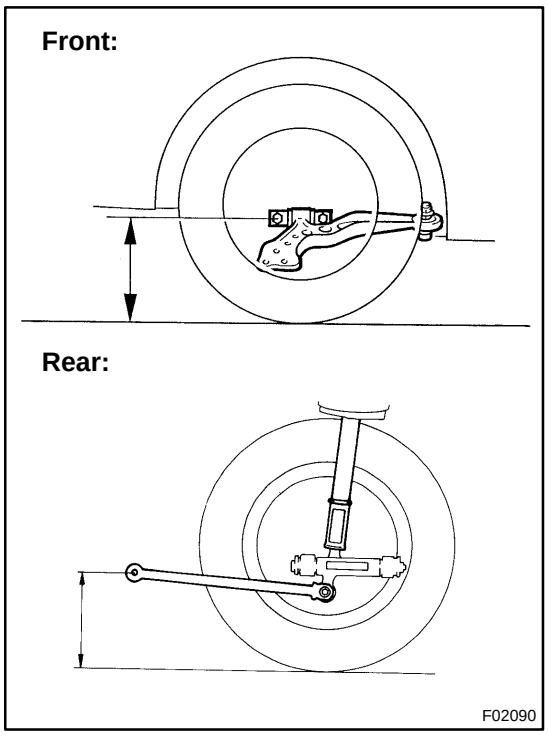

FRONT WHEEL ALIGNMENT

SA1DP-04

INSPECTION

NOTICE:

w/ VSC:

Be sure to perform the steering angle sensor zero point calibration after adjusting the front wheel alignment (See page DI-252).

1. MEASURE VEHICLE HEIGHT

Vehicle height:

Front*1 mm (in.)	Rear*2 mm (in.)
213 (8.39)	266 (10.47)

*1: Front measuring point

Measure the distance from the ground to the center of the front side lower suspension arm mounting bolt.

*2: Rear measuring point

Measure the distance from the ground to the center of the front side strut rod mounting bolt.

NOTICE:

Before inspecting the wheel alignment, adjust the vehicle height to the specified value.

If the vehicle height is not the specified value, try to adjust it by pushing down on or lifting the body.

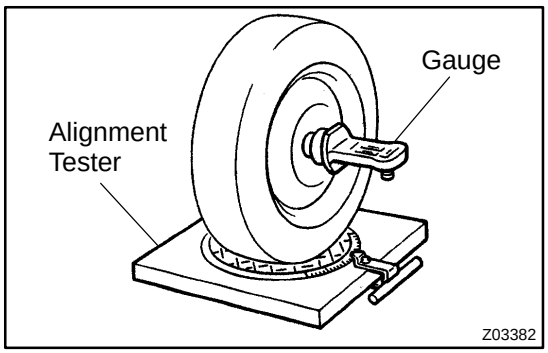

2. INSTALL CAMBER-CASTER-KINGPIN GAUGE OR POSITION VEHICLE ON WHEEL ALIGNMENT TESTER

Follow the specific instructions of the equipment manufacturer.

3. INSPECT CAMBER, CASTER AND STEERING AXIS INCLINATION

Camber, caster and steering axis inclination:

Camber	-0 °37' ± 45' (-0.62° ± 0.75°)
Right-left error	45' (0.75°) or less
Caster	2°10' ± 45' (2.17° ± 0.75°)
Right-left error	45' (0.75°) or less
Steering axis inclination	13°04' ± 45' (13.07° ± 0.75°)
Right-left error	45' (0.75°) or less

If the caster and steering axis inclination are not within the specified values, after the camber has been correctly adjusted, recheck the suspension parts for damaged and/or worn out parts.

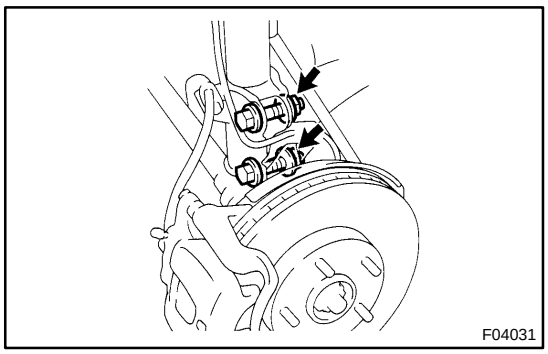
F04031

4. ADJUST CAMBER

NOTICE:

After the camber has been adjusted, inspect the toe-in.

(a) Remove the front wheel and ABS speed sensor clamp.

(b) Remove the 2 nuts on the lower side of the shock absorber.

(c) Coat the threads of the nuts with engine oil.

(d) Temporarily install the 2 nuts.

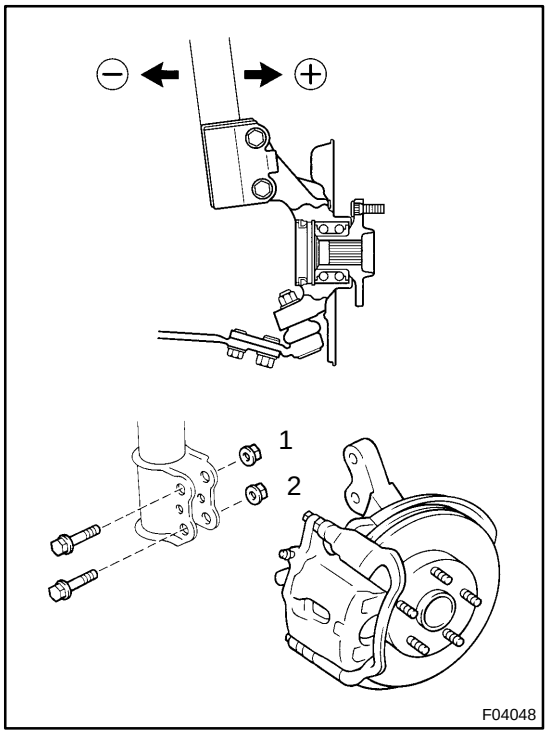

F04048

(e) Adjust the camber by pushing or pulling the lower side of the shock absorber in the direction in which the camber adjustment is required.

(f) Tighten the nuts.

Torque: 211 N·m (2,150 kgf·cm, 156 ft·lbf)

(g) Install the ABS speed sensor clamp and front wheel.

Torque: 103 N·m (1,050 kgf·cm, 76 ft·lbf)

(h) Check the camber.

HINT:

- Try to adjust the camber to the center of the specified value.
- Adjusting value for the set bolts is 6' - 30' (0.1° - 0.5°).

If the camber is not within the specified value, using the following table, estimate how much additional camber adjustment will be required, and select the camber adjusting bolt.

Bolt / Adjusting Value	Set Bolt		Adjusting Bolt					
	90105-17001		90105-17003		90105-17004		90105-17005	
			1 Dot		2 Dots		3 Dots	
	11		•11		•11		•11	
	1	2	1	2	1	2	1	2
15'	●			●				
30'	●					●		
45'	●							●
1°00'			●					●
1°15'					●			●
1°30'							●	●

F01195

(i) Do the steps mentioned above again. Between step (b) and (c), replace 1 or 2 selected bolts.

HINT:

When replacing the 2 bolts, replace 1 bolt for each time.

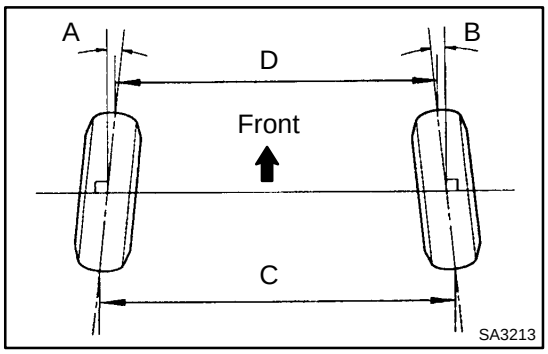

5. INSPECT TOE-IN

Toe-in:

Toe-in (total)	A + B: 0° ± 12' (0° ± 0.2°) C - D: 0 ± 2 mm (0 ± 0.08 in.)

If the toe-in is not within the specified value, adjust it at the rack ends.

6. ADJUST TOE-IN

(a) Remove the rack boot set clips.

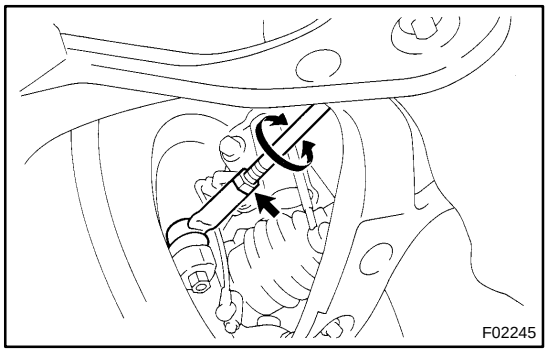

(b) Loosen the tie rod end lock nuts.

(c) Turn the right and left rack ends by an equal amount to adjust the toe-in.

HINT:

Try to adjust the toe-in to the center of the specified value.

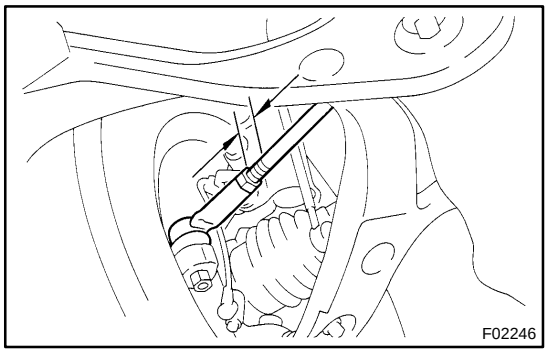

(d) Make sure that the lengths of the right and left rack ends are the same.

Rack end length difference: 1.5 mm (0.059 in.) or less

(e) Torque the tie rod end lock nuts.

Torque: 74 N·m (750 kgf·cm, 54 ft·lbf)

(f) Place the boots on the seats and install the clips.

HINT:

Make sure that the boots are not twisted.

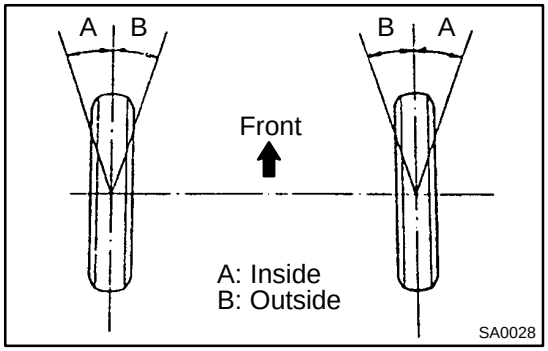

7. INSPECT WHEEL ANGLE

Turn the steering wheel fully, and measure the turning angle.

Wheel turning angle:

Inside wheel	35°45' ± 1° (35.75° ± 1°)
Outside wheel: Reference	31°23' (31.38°)

If the right and left inside wheel angles differ from the specified value, check the right and left rack end lengths.

FRONT WHEEL HUB BOLT

SA0VW-02

REPLACEMENT

1. REMOVE FRONT WHEEL

2. REMOVE BRAKE CALIPER AND DISC

(a) Remove the 2 bolts, brake caliper and disc.

(b) Support the brake caliper securely.

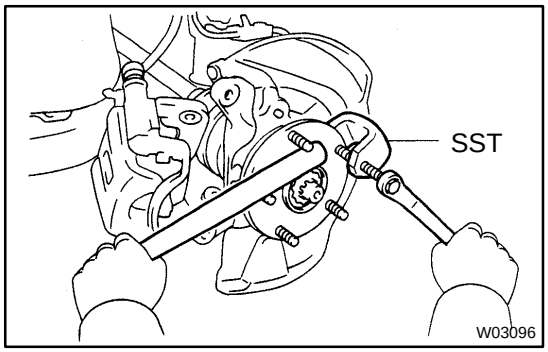

3. REMOVE HUB BOLT

Using SST and a hammer handle or an equivalent, remove the hub bolt.

SST 09628-1001 1

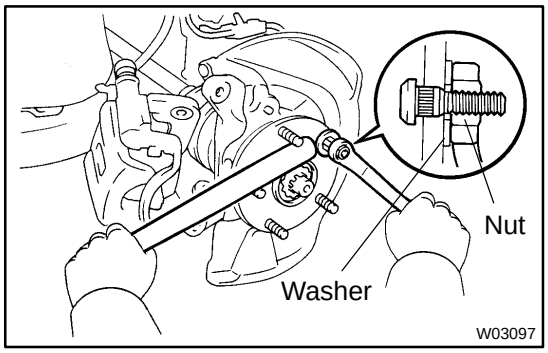

4. INSTALL HUB BOLT

(a) Install a washer and nut to a new hub bolt, as shown in the illustration.

(b) Using a hammer handle or an equivalent to hold, install the hub bolt by torquing the nut.

5. INSTALL DISC AND BRAKE CALIPER

Install the disc and brake caliper with the 2 bolts.

Torque: 107 N·m (1,090 kgf·cm, 79 ft·lbf)

6. INSTALL FRONT WHEEL

Torque: 103 N·m (1,050 kgf·cm, 76 ft·lbf)

REAR AXLE HUB

COMPONENTS

SA0ER-03

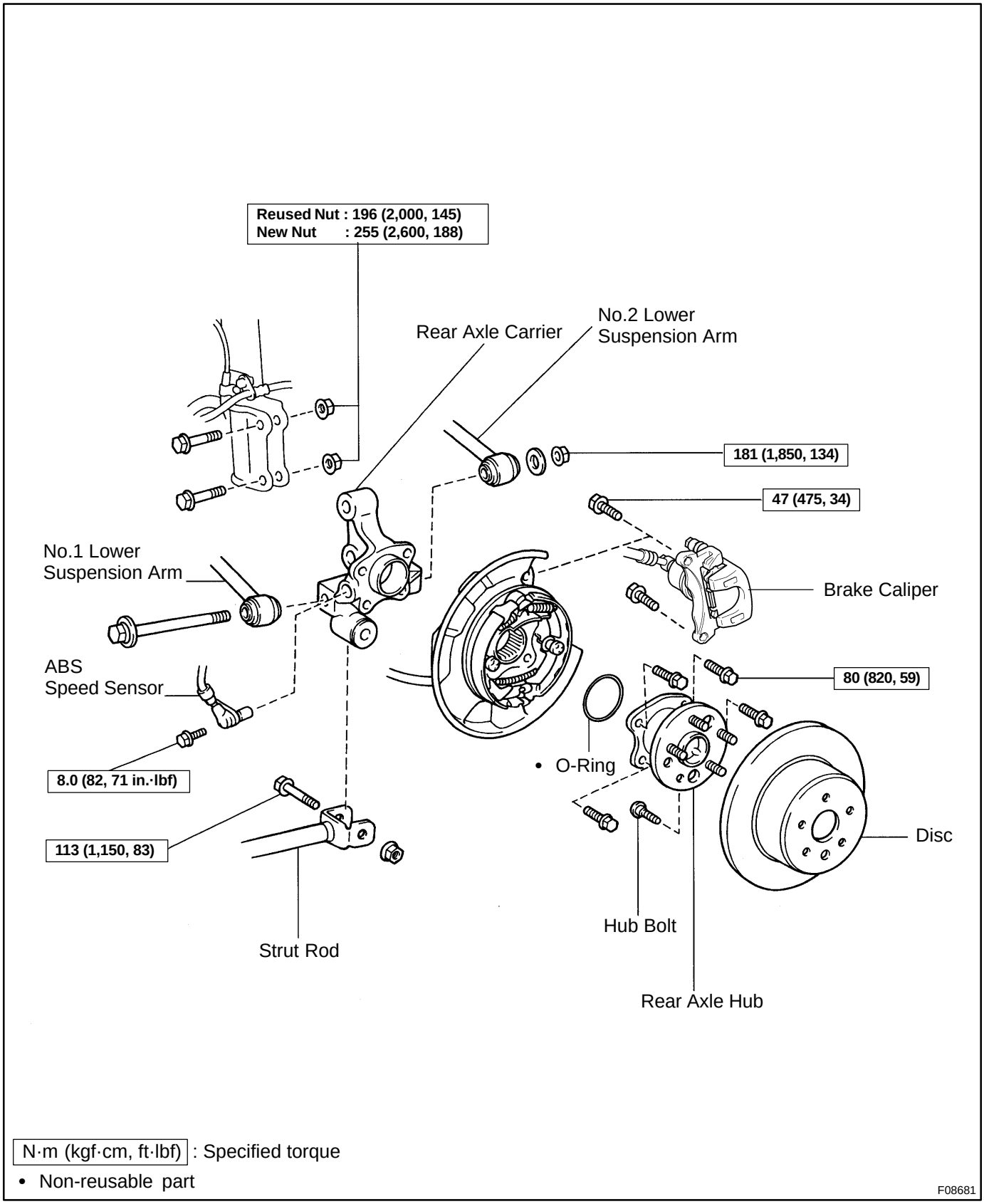

N·m (kgf·cm, ft·lbf) : Specified torque

• Non-reusable part

F08681

SA0W7-03

INSTALLATION

Installation is in the reverse order of removal (See page SA-45).

HINT:

After installation, check the ABS speed sensor signal (See page DI-212 or DI-252) and rear wheel alignment (See page SA-7).

SA0W6-02

REMOVAL

1. REMOVE REAR WHEEL

Torque: 103 N·m (1,050 kgf·cm, 76 ft·lbf)

2. REMOVE BRAKE CALIPER AND DISC

(a) Remove the brake caliper and disc.

Torque: 47 N·m (475 kgf·cm, 34 ft·lbf)

(b) Support the brake caliper securely.

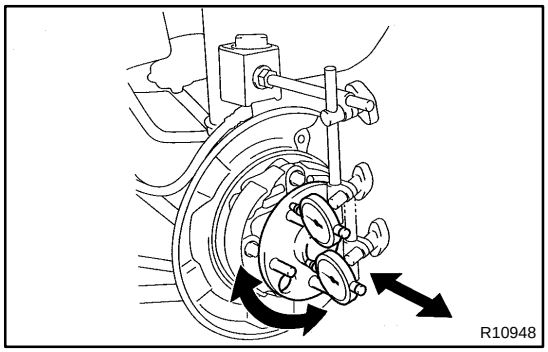

3. CHECK BEARING BACKLASH AND AXLE HUB DEVIATION

(a) Using a dial indicator, check the backlash near the center of the axle hub.

Maximum: 0.05 mm (0.0020 in.)

If the backlash exceeds the maximum, replace the axle hub.

(b) Using a dial indicator, check the deviation at the surface of the axle hub outside the hub bolt.

Maximum: 0.07 mm (0.0028 in.)

If the deviation exceeds the maximum, replace the axle hub.

4. DISCONNECT ABS SPEED SENSOR

Remove the bolt and disconnect the ABS speed sensor.

Torque: 8.0 N·m (82 kgf·cm, 71 in.·lbf)

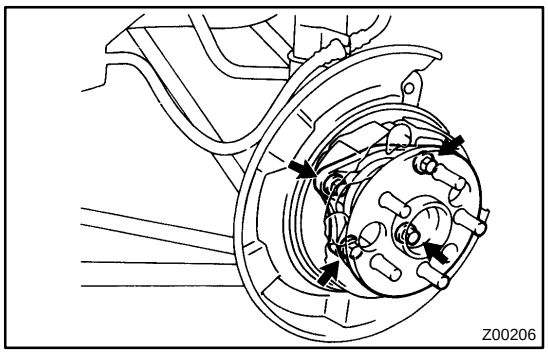

5. REMOVE REAR AXLE HUB

(a) Remove the 4 bolts and rear axle hub.

Torque: 80 N·m (820 kgf·cm, 59 ft·lbf)

(b) Remove the O-ring.

HINT:

At the time of installation, coat a new O-ring with MP grease.

(c) Support the backing plate securely.

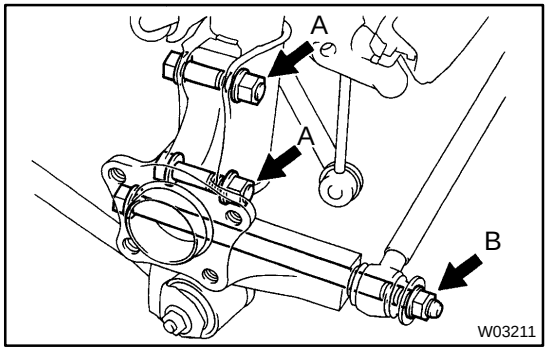

6. REMOVE REAR AXLE CARRIER

(a) Loosen the 3 nuts.

Torque:

Nut A (Reused nut): 196 N·m (2,000 kgf·cm, 145 ft·lbf)

Nut A (New nut): 255 N·m (2,600 kgf·cm, 188 ft·lbf)

Nut B: 181 N·m (1,850 kgf·cm, 134 ft·lbf)

HINT:
At the time of installation, please refer to the following items.

- After stabilizing the suspension, torque the nuts.
- If reusing the 2 nuts A, coat the nut's threads with engine oil.

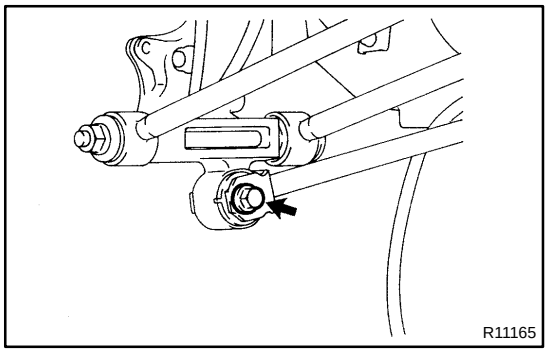

(b) Remove the bolt and nut, and disconnect the strut rod from the rear axle carrier.

NOTICE:
Do not turn the nut.

Torque: 113 N·m (1,150 kgf·cm, 83 ft·lbf)

(c) Remove the 2 nuts and bolts on the lower side of the shock absorber.

(d) Remove the nut, washer and bolt and disconnect the No. 1 and No. 2 lower suspension arm from the rear axle carrier.

(e) Remove the rear axle carrier.

REAR LOWER SUSPENSION ARM AND STRUT ROD

SA0VF-02

COMPONENTS

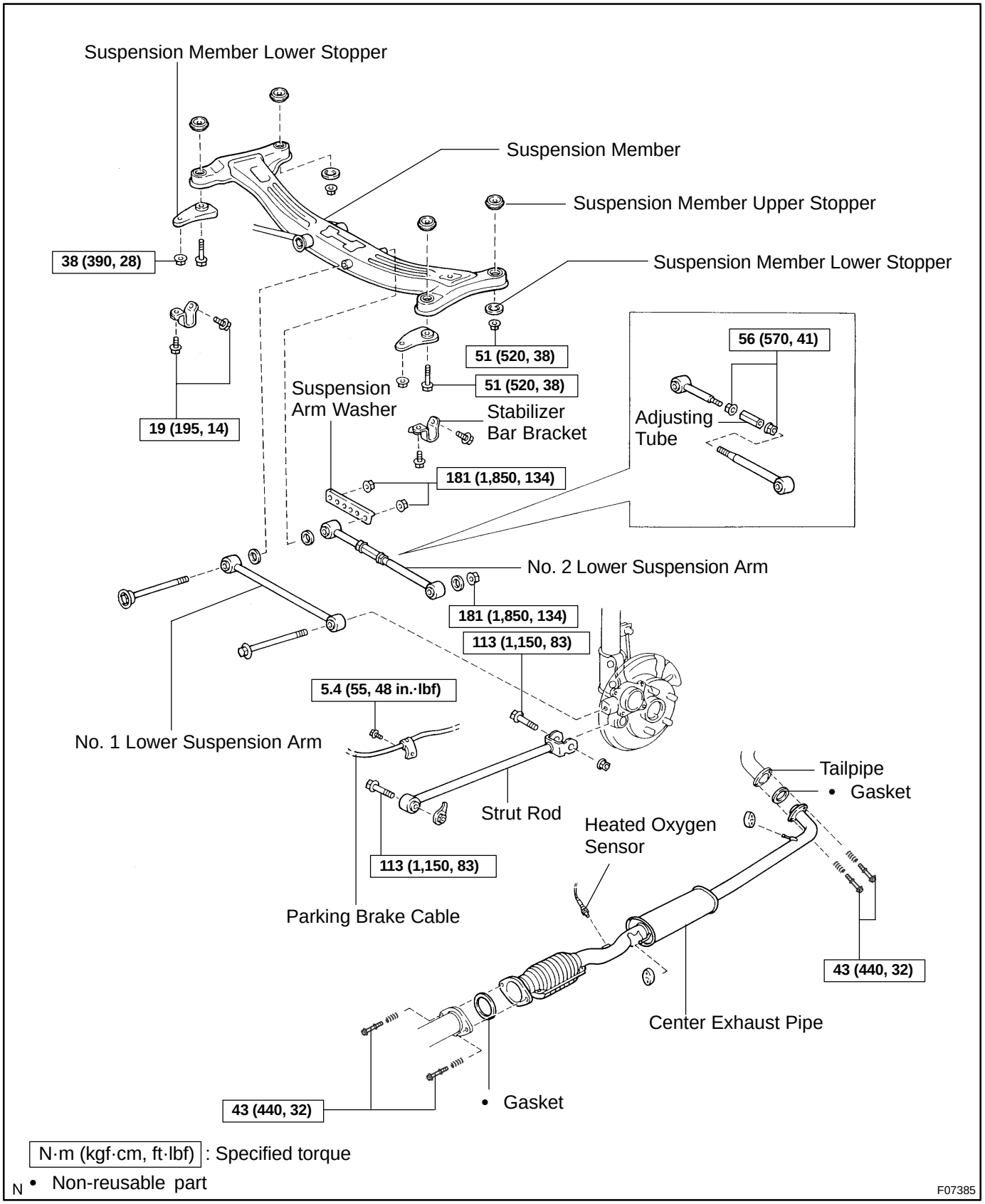

N·m (kgf·cm, ft·lbf) : Specified torque

N • Non-reusable part

F07385

SA1F8-02

DISASSEMBLY

DISASSEMBLE NO. 2 LOWER SUSPENSION ARM

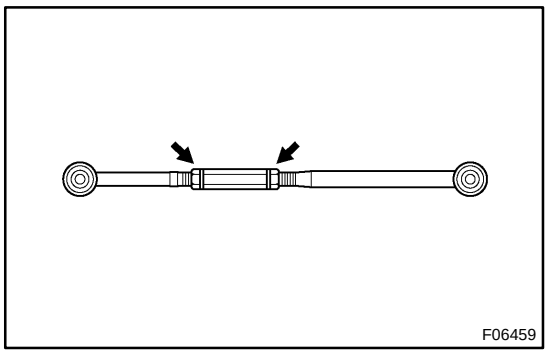

(a) Loosen the 2 lock nuts.

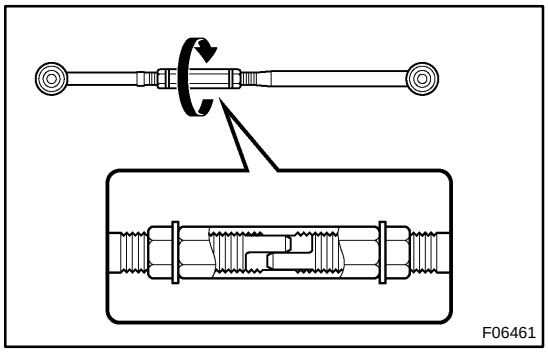

(b) Turn the adjusting tube and disassemble the No. 2 lower suspension arm.

(c) Remove the 2 lock nuts.

SA0VJ-02

INSTALLATION

Installation is in the reverse order of removal (See page SA-57).

HINT:

After installation, check the rear wheel alignment (See page SA-7).

SA1F9-02

REASSEMBLY

ASSEMBLE NO. 2 LOWER SUSPENSION ARM

(a) Install the 2 lock nuts.

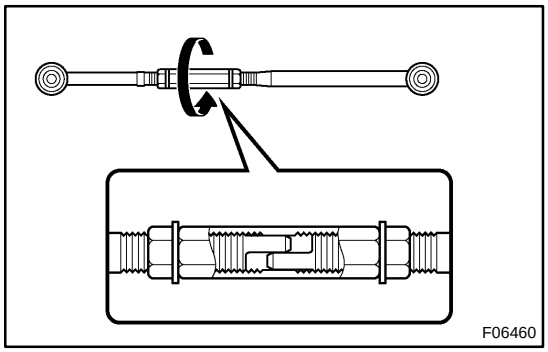

(b) Turn the adjusting tube and assemble the No. 2 lower suspension arm.

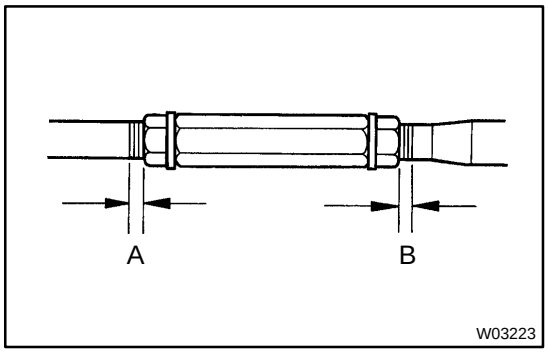

HINT:
When assembling the No. 2 lower suspension arm, try to make sure that the lengths of A and B shown in the illustration are the same.

Maximum difference: 3.0 mm (0.118 in.)

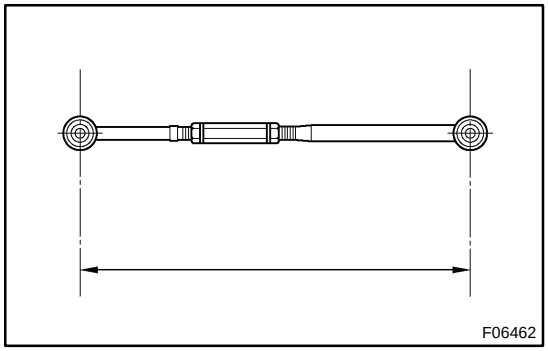

(c) Adjust the No. 2 lower suspension arm length by turning the adjusting tube.

Arm length: 512.3 mm (20.169 in.)

(d) Temporarily tighten the 2 lock nuts.

HINT:
After adjusting the rear wheel alignment, torque the lock nuts (See page SA-7).

Torque: 56 N·m (570 kgf·cm, 41 ft·lbf)

SA0VG-02

REMOVAL

1. REMOVE REAR WHEEL
Torque: 103 N·m (1,050 kgf·cm, 76 ft·lbf)

2. REMOVE CENTER EXHAUST PIPE

3. REMOVE STRUT ROD

(a) Remove the bolt and disconnect the parking brake cable.
Torque: 5.4 N·m (55 kgf·cm, 48 in.·lbf)

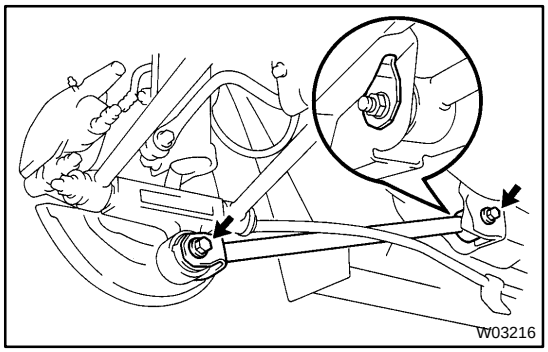

(b) Remove the 2 bolts and nuts.
Torque: 113 N·m (1,150 kgf·cm, 83 ft·lbf)

NOTICE:
Do not turn the nut.

HINT:
At the time of installation, after stabilizing the suspension, torque the bolts.

(c) Remove the strut rod.

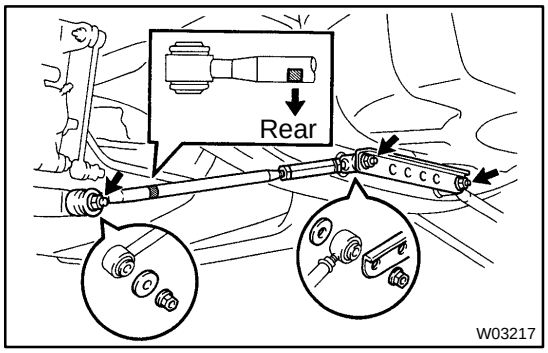

4. REMOVE NO. 2 LOWER SUSPENSION ARM

(a) Remove the 3 nuts, suspension arm washer and washer.
Torque: 181 N·m (1,850 kgf·cm, 134 ft·lbf)

HINT:
At the time of installation, after stabilizing the suspension, torque the nuts.

(b) Remove the No. 2 lower suspension arm.

HINT:
At the time of installation, face the paint mark to the rearward.

5. REMOVE STABILIZER BAR BRACKETS
(See page SA-63)

6. REMOVE NO. 1 LOWER SUSPENSION ARM

(a) Support the suspension member with a jack.

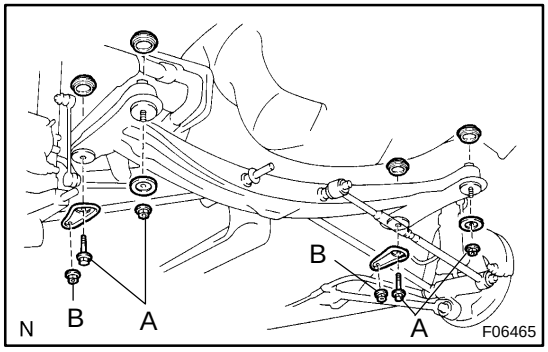

(b) Remove the 4 nuts, 2 bolts and 8 suspension member stoppers.
Torque:
A: 51 N·m (520 kgf·cm, 38 ft·lbf)
B: 38 N·m (390 kgf·cm, 28 ft·lbf)

(c) Lower the suspension member.

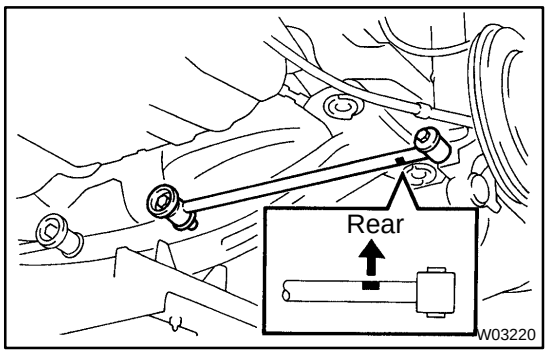

(d) Remove the 2 bolts, washers and No. 1 lower suspension arm.

HINT:

At the time of installation, face the paint mark to the rearward.

REAR SHOCK ABSORBER

SA0W9-02

COMPONENTS

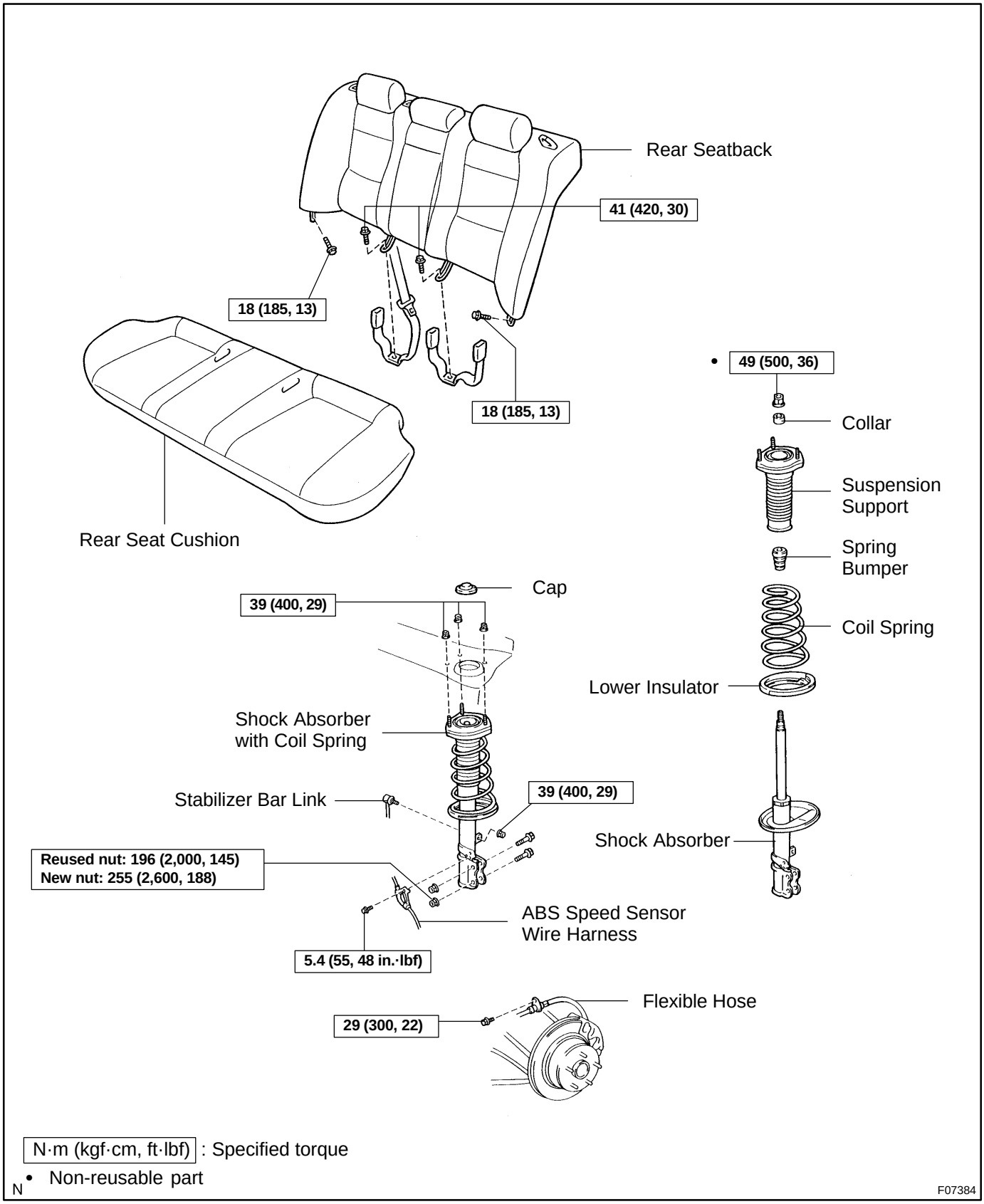

SA0WB-02

DISASSEMBLY

REMOVE COIL SPRING

(a) Install 2 nuts and a bolt to the bracket at the lower side of the shock absorber and secure it in a vise.

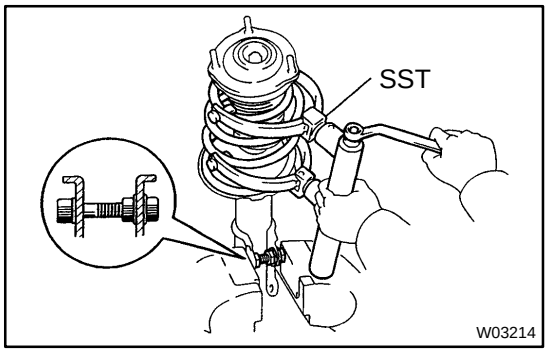

(b) Using SST, compress the coil spring.
SST 09727-30021

NOTICE:

Do not use an impact wrench. It will damage the SST.

(c) Remove the nut.

(d) Remove the collar, suspension support, coil spring, lower insulator and spring bumper.

SA0WD-02

DISPOSAL

1. FULLY EXTEND SHOCK ABSORBER ROD

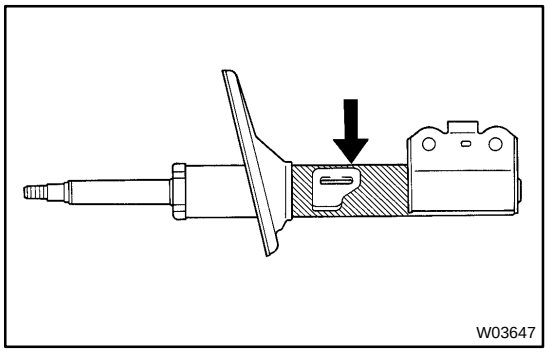

2. DRILL HOLE TO DISCHARGE GAS FROM CYLINDER

Using a drill, make a hole in the cylinder as shown in the illustration to discharge the gas inside.

CAUTION:

- **When drilling, chips may fly out, work carefully.**
- **The gas is colorless, odorless and non-poisonous.**

SA0WC-02

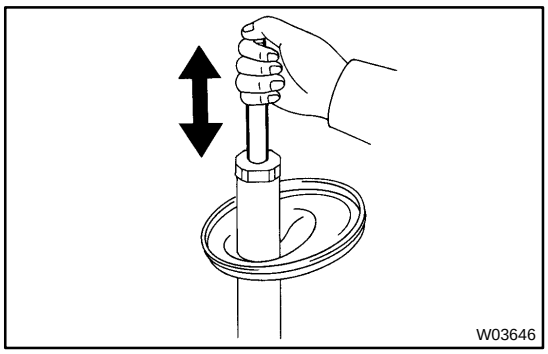

INSPECTION

INSPECT SHOCK ABSORBER

Compress and extend the shock absorber rod and check that there is no abnormal resistance or unusual sound during operation.

If there is any abnormality, replace the shock absorber with a new one.

NOTICE:

When disposing of the shock absorber, see DISPOSAL on page SA-53 .

SA0WF-02

INSTALLATION

Installation is in the reverse order of removal (See page SA-50).

HINT:

After installation, check the rear wheel alignment (See page SA-7).

SA0WE-02

REASSEMBLY

1. INSTALL LOWER INSULATOR

2. INSTALL SPRING BUMPER TO PISTON ROD

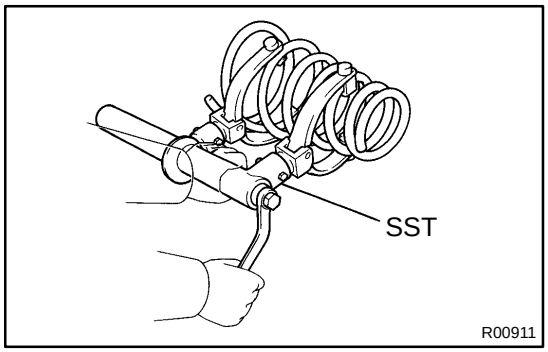

3. INSTALL COIL SPRING

(a) Using SST, compress the coil spring.
SST 09727-30021

NOTICE:

Do not use an impact wrench. It will damage the SST.

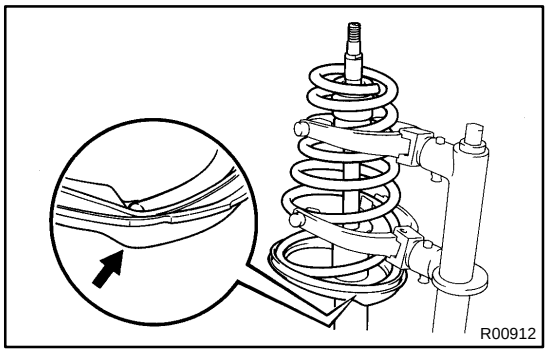

(b) Install the coil spring to the shock absorber.

HINT:

Fit the lower end of the coil spring into the gap of the lower insulator.

4. INSTALL SUSPENSION SUPPORT

(a) Install the suspension support to the piston rod.

(b) Install the collar.

(c) Temporarily tighten a new nut.

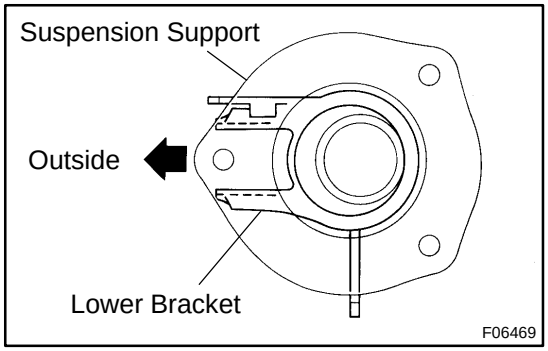

(d) Rotate the suspension support to set it in the correct direction shown in the illustration.

(e) Remove the SST.
SST 09727-30021

HINT:

After removing SST, recheck the direction of the suspension support.

SA0WA-02

REMOVAL

1. **REMOVE REAR SEAT (See page BO-1 19)**
2. **REMOVE REAR WHEEL**
   Torque: 103 N·m (1,050 kgf·cm, 76 ft·lbf)

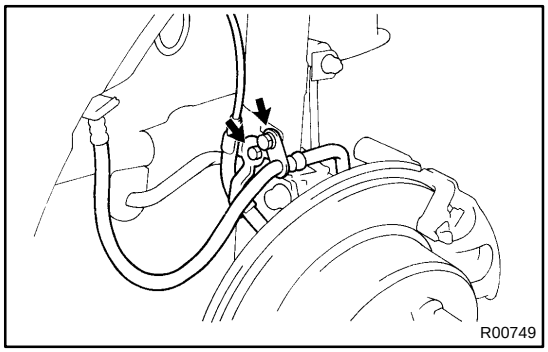

3. **DISCONNECT FLEXIBLE HOSE AND ABS SPEED SENSOR WIRE HARNESS CLAMP**

Remove the 2 bolts and disconnect the flexible hose and ABS speed sensor wire harness clamp.

Torque:
Flexible hose: 29 N·m (300 kgf·cm, 22 ft·lbf)
ABS speed sensor wire harness:
5.4 N·m (55 kgf·cm, 48 in.·lbf)

4. **DISCONNECT STABILIZER BAR LINK FROM SHOCK ABSORBER (See page SA-63)**
5. **REMOVE SHOCK ABSORBER WITH COIL SPRING**

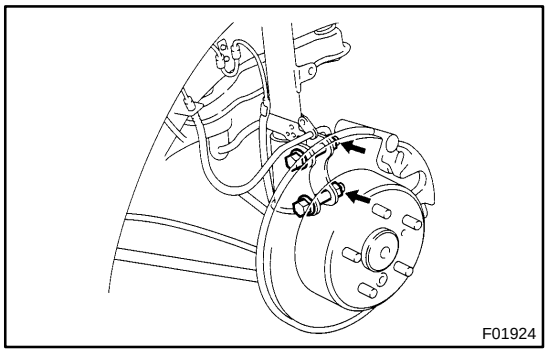

(a) Loosen the 2 nuts on the lower side of the shock absorber.

Torque:
Reused nut: 196 N·m (2,000 kgf·cm, 145 ft·lbf)
New nut: 255 N·m (2,600 kgf·cm, 188 ft·lbf)

HINT:
At the time of installation, coat the nut's threads with engine oil.

(b) Support the rear axle carrier with a jack.

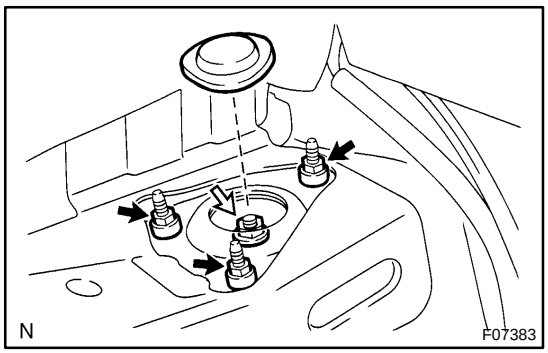

(c) Remove the cap.

(d) Loosen the nut in the center of the suspension support.

NOTICE:
Do not remove it.

Torque: 49 N·m (500 kgf·cm, 36 ft·lbf)

HINT:
If not disassembling the shock absorber, it is not necessary to loosen the nut.

(e) Remove the 3 nuts of the suspension support.

Torque: 39 N·m (400 kgf·cm, 29 ft·lbf)

(f) Lower the rear axle carrier and remove the 2 bolts on the lower side of the shock absorber.

(g) Remove the shock absorber with the coil spring.

REAR STABILIZER BAR

COMPONENTS

SA0VK-02

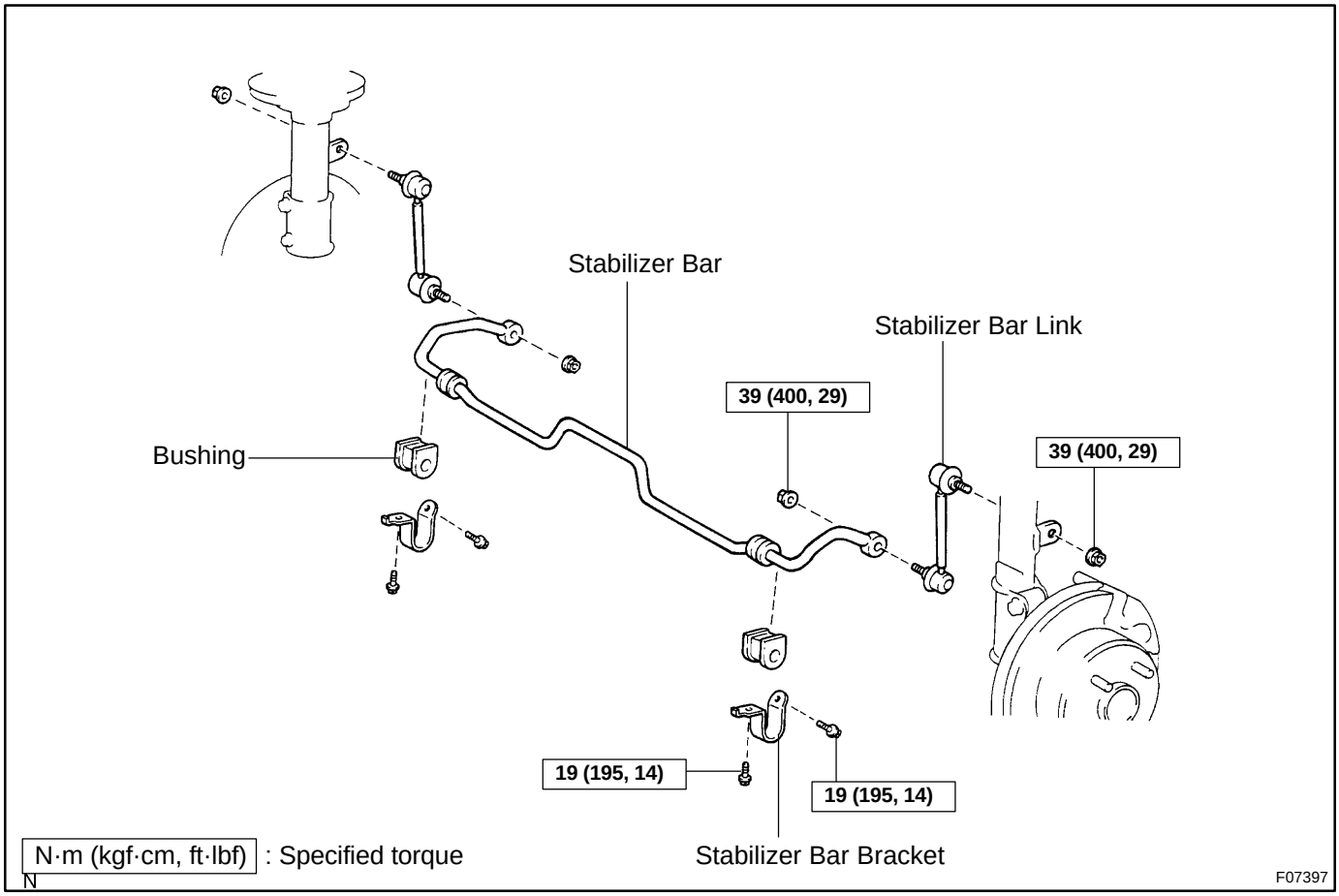

SA0VM-01

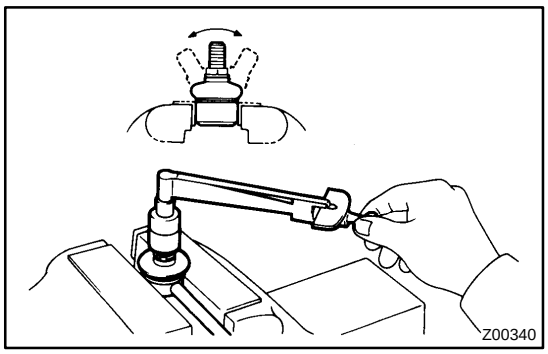

INSPECTION

INSPECT STABILIZER BAR LINK BALL JOINT FOR ROTATION CONDITION

(a) As shown in the illustration, flip the ball joint stud back and forth 5 times, before installing the nut.

(b) Using a torque wrench, turn the nut continuously at a rate of 2 - 4 seconds per 1 turn and take the torque reading on the 5th turn.

Turning torque:

0.05 - 1.0 N·m (0.5 - 10 kgf·cm, 0.4 - 8.7 in.·lbf)

SA0VN-01

INSTALLATION

Installation is in the reverse order of removal (See page SA-63).

SA0VL-02

REMOVAL

1. REMOVE REAR WHEELS

Torque: 103 N·m (1,050 kgf·cm, 76 ft·lbf)

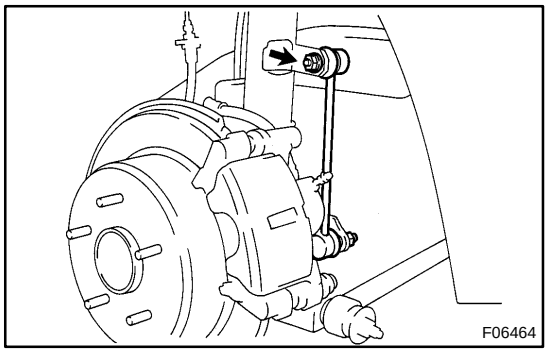

2. REMOVE STABILIZER BAR LINKS

(a) Remove the 2 nuts and stabilizer bar link.

HINT:

If the ball joint turns together with the nut, use a hexagon (5 mm) wrench to hold the stud.

Torque: 39 N·m (400 kgf·cm, 29 ft·lbf)

(b) Employ the same manner described above to the other side.

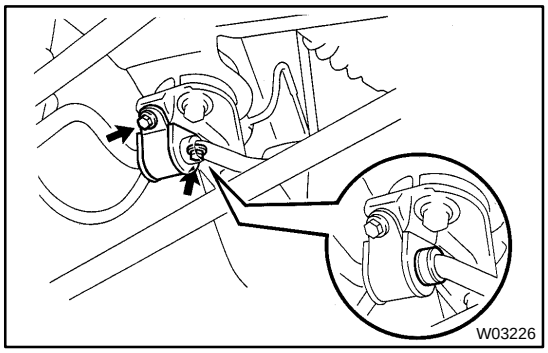

3. REMOVE BRACKETS AND BUSHINGS

(a) Remove the 2 bolts, bracket and bushing.

Torque: 19 N·m (195 kgf·cm, 14 ft·lbf)

HINT:

At the time of installation, install the bushing to the outside of the bushing on the stabilizer bar.

(b) Employ the same manner described above to the other side.

4. REMOVE STABILIZER BAR

REAR WHEEL ALIGNMENT

SA1DQ-03

INSPECTION

1. MEASURE VEHICLE HEIGHT (See page SA-4)

2. INSTALL CAMBER-CASTER-KINGPIN GAUGE OR POSITION VEHICLE ON WHEEL ALIGNMENT TESTER

Follow the specific instructions of the equipment manufacturer.

3. INSPECT CAMBER

Camber:

Camber	-0 °43' ± 45' (-0.72° ± 0.75°)
Right-left error	45' (0.75°) or less

If the measured value is not within the specified value, inspect the suspension parts for damage and/or wear and replace them if necessary because camber is not adjustable.

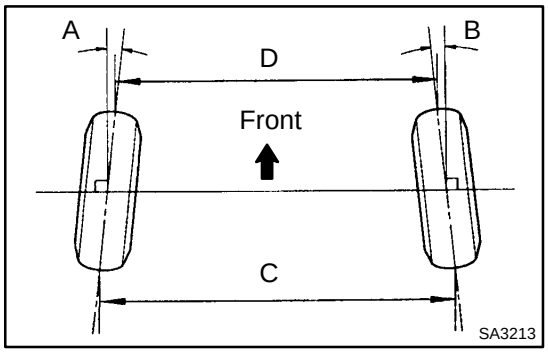

4. INSPECT TOE-IN

Toe-in:

Toe-in (total)	A + B: 0°24' ± 12' (0.4° ± 0.2°) C - D: 4 ± 2 mm (0.16 ± 0.08 in.)

If the toe-in is not within the specified value, adjust it at the No. 2 lower suspension arm.

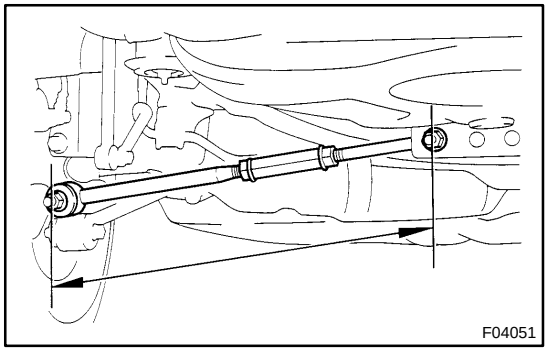

5. ADJUST TOE-IN

(a) Measure the lengths of the right and left No. 2 lower suspension arms.

No. 2 lower suspension arm length difference:
1 mm (0.04 in.) or less

If the right-left difference is greater than the specified value, adjust the length.

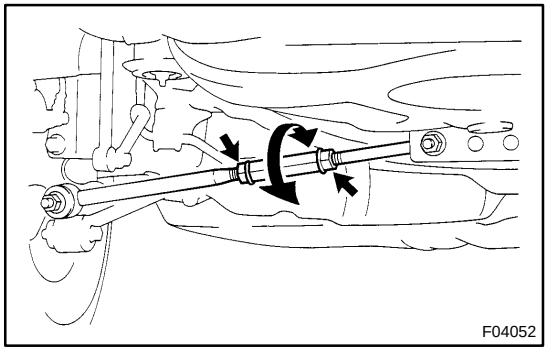

(b) Loosen the lock nuts.

(c) Turn the right and left adjusting tube by an equal amount to adjust toe-in.

HINT:

- Try to adjust the toe-in to the center value.
- One turn of the each adjusting tube will adjust the toe-in by about 36' (0.6°, 6.7 mm, 0.264 in.).

(d) Torque the lock nuts.

Torque: 56 N·m (570 kgf·cm, 41 ft·lbf)

REAR WHEEL HUB BOLT

SA0W8-02

REPLACEMENT

1. REMOVE REAR WHEEL

2. REMOVE BRAKE CALIPER AND DISC

(a) Remove the 2 bolts, brake caliper and disc.

(b) Support the brake caliper securely.

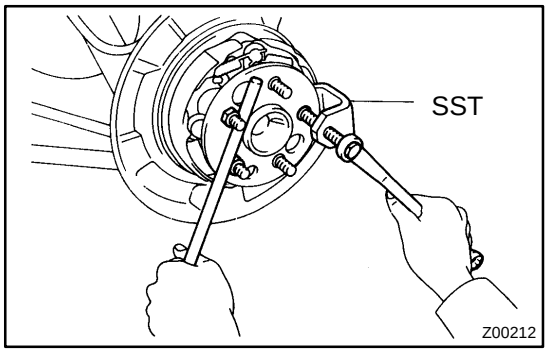

3. REMOVE HUB BOLT

Using SST and a hammer handle or an equivalent, remove the hub bolt.

SST 09628-1001 1

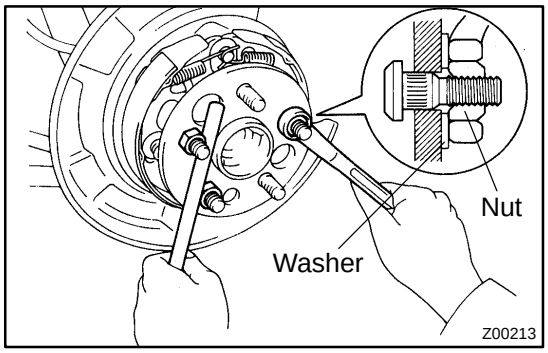

4. INSTALL HUB BOLT

(a) Install a washer and nut to a new hub bolt as shown in the illustration.

(b) Using a hammer handle or an equivalent to hold, install the hub bolt by torquing the nut.

5. INSTALL DISC AND BRAKE CALIPER

Install the disc and brake caliper with the 2 bolts.

Torque: 47 N·m (475 kgf·cm, 34 ft·lbf)

6. INSTALL REAR WHEEL

Torque: 103 N·m (1,050 kgf·cm, 76 ft·lbf)

TIRE AND WHEEL

SA1DO-03

INSPECTION

1. INSPECT TIRE

(a) Check the tires for wear and proper inflation pressure.

Cold tire inflation pressure:

Tire size	Front, rear kPa (kgf/cm^2, psi)
P205/65R15 92H	210 (2.1, 31)
P205/60R16 91H	220 (2.2, 32)

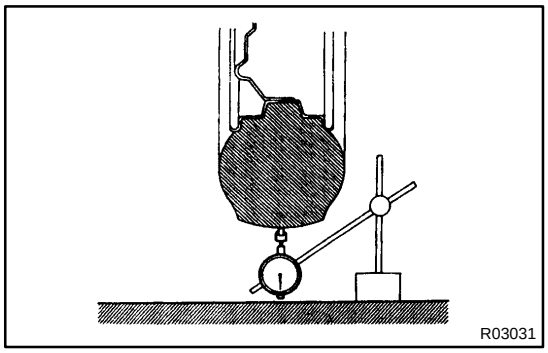

(b) Check the tire runout.
Tire runout: 1.0 mm (0.039 in.) or less

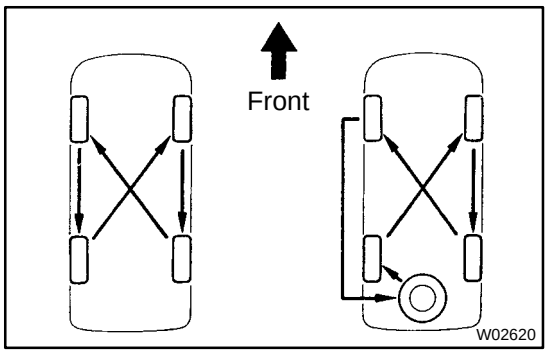

2. ROTATING TIRES

HINT:
See the illustration for where to rotate each tire when you include the spare tire in the rotation and when you do not.

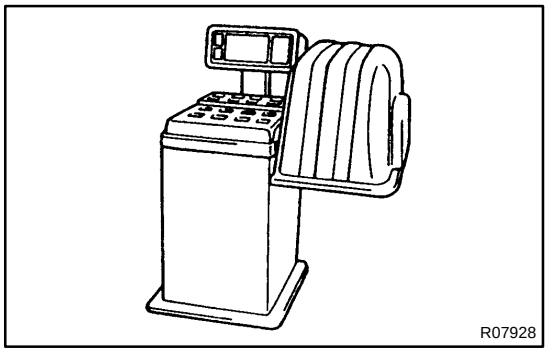

3. INSPECT WHEEL BALANCE

(a) Check and adjust the Off-the-car balance.
(b) If necessary, check and adjust the On-the-car balance.
Imbalance after adjustment: 8.0 g (0.018 lb) or less

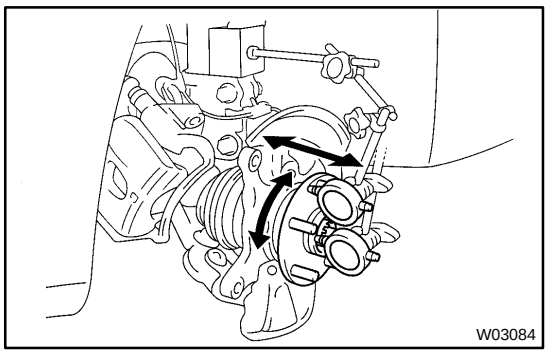

4. CHECK WHEEL BEARING LOOSENESS

(a) Check the backlash in the bearing shaft direction.
Maximum: 0.05 mm (0.0020 in.)

(b) Check the axle hub deviation.
Maximum: 0.05 mm (0.0020 in.)

5. CHECK FRONT SUSPENSION FOR LOOSENESS

6. CHECK STEERING LINKAGE FOR LOOSENESS

7. CHECK BALL JOINT FOR LOOSENESS

8. CHECK SHOCK ABSORBER WORKS PROPERLY

- Check that oil leaks
- Check mounting bushings for wear
- Bounce front and rear of the vehicle

TROUBLESHOOTING

SA0CB-02

PROBLEM SYMPTOMS TABLE

Use the table below to help you find the cause of the problem. The numbers indicate the priority of the likely cause of the problem. Check each part in order. If necessary, replace these parts.

Symptom	Suspect Area	See page
Wander/pulls	3. Tire (Worn or improperly inflated)	SA-2
	4. Wheel alignment (Incorrect)	SA-4
		SA-7
	5. Steering linkage (Loosen or worn)	-
	6. Hub bearing (Worn)	SA-9
		SA-45
	7. Steering gear (Out of adjustment or broken)	SR-37
	8. Suspension parts (Worn)	-
Bottoming	1. Vehicle (Overloaded)	-
	2. Spring (Weak)	SA-25
		SA-49
	3. Shock absorber (Worn)	SA-28
		SA-52
Sways/pitches	1. Tire (Worn or improperly inflated)	SA-2
	2. Stabilizer bar (Bent or broken)	SA-40
		SA-62
	3. Shock absorber (Worn)	SA-28
		SA-52
Front wheel shimmy	1. Tire (Worn or improperly inflated)	SA-2
	2. Wheel (Out of balance)	SA-2
	3. Shock absorber (Worn)	SA-28
	4. Wheel alignment (Incorrect)	SA-4
	5. Ball joint (Worn)	SA-38
	6. Hub bearing (Worn)	SA-9
	7. Steering linkage (Loosen or worn)	-
	8. Steering gear (Out of adjustment or broken)	SR-37
Abnormal tire wear	1. Tire (Worn or improperly inflated)	SA-2
	2. Wheel alignment (Incorrect)	SA-4
	3. Shock absorber (Worn)	SA-28
		SA-52
	4. Suspension parts (Worn)	-